Model T-435

Steam Radiator Gate Valve

LEGEND VALVE

NO.	PART	MATERIAL
1	HANDLE SCREW	STEEL
2	HANDLE	PHENOLIC
3	PACKING NUT	BRASS
4	UNION NUT	BRONZE
5	TAILPIECE	BRONZE
6	PACKING	*TEFLON
7	STEM	FORGED BRASS
8	BONNET	BRONZE
9	BODY	BRONZE
10	DISC	BRONZE
11	LOCK NUT	BRASS
12	GLAND	BRASS
	*TEFLON IS A REGISTERED TRADEMARK OF DUPONT	

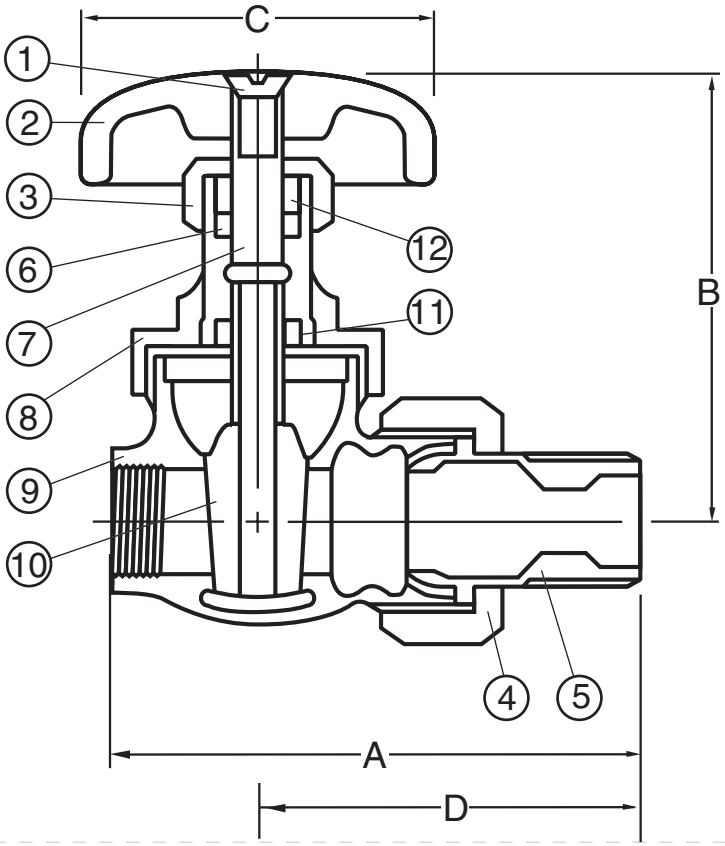

SIZE	1/2"	3/4"	1"	1-1/4"	1-1/2"	
A	2.98	3.54	3.95	4.38	4.88	
B	2.96	3.46	3.83	4.49	5.18	
C	2.30	2.30	2.30	2.30	2.30	
D	2.10	2.55	2.80	3.07	3.61	

- NOTES:
- 125 W.S.P.
- 200 W.O.G. NON-SHOCK