GAS-FIRED WATER HEATER

A Spanish language version of these instructions is available by contacting the company listed on the rating plate.
La version Espanola de estas instrucciones se puede obtener al escribirle a la fabrica cuyo nombre aparece en la placa de especificaciones.

INSTALLATION & OPERATION INSTRUCTION MANUAL

WARNING: If the information in these instructions is not followed exactly, a fire or explosion may result causing property damage, personal injury or death.

FOR YOUR SAFETY

– Do not store or use gasoline or other flammable, combustible, or corrosive vapors and liquids in the vicinity of this or any other appliance.

– WHAT TO DO IF YOU SMELL GAS

- **Do not try to light any appliance.**
- **Do not touch any electrical switch; do not use any phone in your building.**
- **Immediately call your gas supplier from a neighbor's phone. Follow the gas supplier's instructions.**
- **If you cannot reach your gas supplier, call the fire department.**

– Installation and service must be performed by a qualified installer, service agency or the gas supplier.

For your family's comfort, safety and convenience, we recommend this water heater be installed and serviced by a plumbing professional.

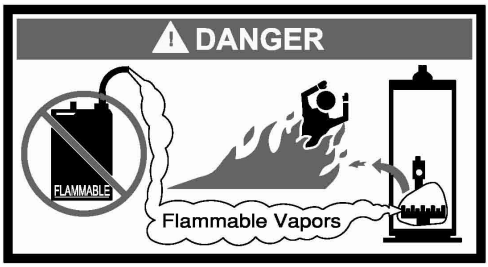

CONGRATULATIONS!

You have just purchased one of the finest water heaters on the market today!

This installation, operation and instruction manual will explain in detail the installation and maintenance of your new Gas Water Heater. We strongly recommend that you contact a plumbing professional for the installation of this water heater.

We require that you carefully read this manual, as well as the enclosed warranty, and refer to it when questions arise. If you have any specific questions concerning your warranty, please consult the plumbing professional from whom your water heater was purchased. For your records we recommend that you write the model, serial number and installation date of your water heater in the maintenance section in the back of this manual.

This manual should be kept with the water heater.

TABLE OF CONTENTS

	Page
GENERAL INFORMATION	4
INSTALLATION	5
Locating the Water Heater	5
Minimum Clearances	8
Venting	9
Combustion Air Supply	10
Water Connections	12
Gas Connections	15
GENERAL OPERATION	16
Lighting and Shutdown Instructions	17
Thermostat Adjustment	19
Burner Flame Check	21
MAINTENANCE	22
PARTS LIST AND DRAWING	25
TROUBLESHOOTING CHART	26
INSTALLATION INSTRUCTIONS FOR POTABLE WATER AND SPACE HEATING	28
NOTES	30

GENERAL INFORMATION

This gas-fired water heater is design certified by CSA International under the applicable American National Standard, Z21.10.1 or Z21.10.3-(as indicated on the rating plate), or CSA 4.1-(as indicated on the rating plate), available from CSA International, 8501 East Pleasant Valley Road, Cleveland, OH U.S.A. 44131-5575.

This water heater must be installed in accordance with local codes. In the absence of local codes, it must be installed in compliance with the National Fuel Gas Code (ANSI Z223.1-Latest Edition), or in Canada CAN/CGA B149.1 Natural Gas Installation Code (Latest Edition) or CAN/CGA B149.2 Propane Installation Code (Latest Edition). The warranty for this water heater is in effect only when the water heater is installed, adjusted, and operated in accordance with these Installation and Operating Instructions. The manufacturer will not be liable for any damage resulting from alteration and/or failure to comply with these instructions.

This water heater is not design certified for installation in a mobile home. Such an installation may create a hazardous condition and will nullify the warranty.

This water heater has been designed and certified for the purpose of heating potable water. The installation and use of this water heater for any purpose other than the heating of potable water may cause damage to the water heater, create a hazardous condition, and nullify the warranty.

⚠ CAUTION

Incorrect operation of this appliance may create a hazard to life and property and will nullify the warranty.

⚠ WARNING

Prior to connecting the gas supply line to a gas fired water heater, ensure that the gas supply line does not have moisture/water or dirt/scale inside the gas line. Commonly this check is done at the lowest point in the gas distribution system prior to gas burning appliances.

Do not use this appliance if any external part to the tank has been submerged in water. You should contact a qualified service technician to inspect the appliance and to replace any part of the control system including the combination gas control which has been submerged in water. See the Gas Connections section of this manual before servicing or replacing a water heater that has had any external part to the tank submerged in water.

⚠ DANGER

Do not store or use gasoline or other flammable, combustible, or corrosive vapors and liquids in the vicinity of this or any other appliance.

IMPORTANT

Before proceeding, please inspect the water heater and components for possible damage. **DO NOT** install any damaged components. If damage is evident then please contact the supplier where the water heater was purchased or the manufacturer listed on the rating plate for replacement parts.

This water heater has been manufactured for operation at altitudes from sea level to 2000 feet (610m). For use of this appliance at an elevation greater than 2000 feet (610m), contact the dealer or manufacturer listed on the rating plate for information on any necessary modification. Uncorrected operation of this appliance may create a hazard to life and property.

Make sure that you check the rating plate and combination gas control on the water heater to be certain that the type of gas being supplied corresponds with the marking on the rating plate and combination gas control.

A sacrificial anode is used to extend tank life. The removal of this anode, for any reason, will nullify the warranty. In areas where water is unusually active, an odor may occur at the hot water faucet due to a reaction between the sacrificial anode and the impurities in the water. If this should happen, an alternative anode may be purchased from the supplier that installed this water heater. This will minimize the odor while protecting the tank. Additionally, the water heater should be flushed with appropriate dissolvers to eliminate any bacteria.

INSTALLATION

Locating the Water Heater

⚠ WARNING

Water heaters are heat producing appliances. To avoid damage or injury there must be no materials stored against the water heater or vent-air intake system and proper care must be taken to avoid unnecessary contact (especially by children) with the water heater and vent-air intake components. **UNDER NO CIRCUMSTANCES SHALL FLAMMABLE MATERIALS, SUCH AS GASOLINE OR PAINT THINNER TO BE USED OR STORED IN THE VICINITY OF THIS WATER HEATER, VENT-AIR INTAKE SYSTEM OR IN ANY LOCATION FROM WHICH FUMES COULD REACH THE WATER HEATER OR VENT-AIR INTAKE SYSTEM.**

This water heater **MUST** be installed indoors out of the wind and weather.

This water heater **MUST NOT** be installed in any location where gasoline or flammable vapors are likely to be present, unless the installation is such to eliminate the probable ignition of gasoline or flammable vapors.

Installation (Locating the Water Heater) continued-

Water heaters in residential garages must be installed so that all burner(s) and burner ignition device(s) are located not less than 18 inches *(45.7 cm)* above the floor and be located, or protected, to avoid physical damage. For other installations refer to local codes. In the absence of local codes, the water heater must be installed in compliance with the National Fuel Gas Code, (ANSI Z223.1- Latest Edition), or in Canada CAN/CGA B149.1 Natural Gas Installation Code (Latest Edition) or CAN/CGA B149.2 Propane Installation Code (Latest Edition).

The location of this water heater is of the utmost importance. Before installing this water heater, you should read the Installation section of these instructions. After reading these Installation and Operating Instructions, select a location for the water heater where the floor is level and is easily accessible to gas and water supply lines. **DO NOT** locate the water heater where water lines could be subjected to freezing temperatures. Make sure the cold water pipes are not located directly above the gas control so that condensate during humid weather does not drip on the controls.

Note: For California installation this water heater must be braced, anchored, or strapped to avoid falling or moving during an earthquake. See instructions for correct installation procedures. Instructions may be obtained from DSA Headquarters Office, 1102 Q Street, Suite 5100, Sacramento, CA 95811.

Water heater corrosion and component failure can be caused by the heating and breakdown of airborne chemical vapors. Examples of some typical compounds that are potentially corrosive are: spray can propellants, cleaning solvents, refrigerator and air conditioning refrigerants, swimming pool chemicals, calcium and sodium chloride, waxes and process chemicals. These materials are corrosive at very low concentration levels with little or no odor to reveal their presence. **NOTE: DAMAGE TO THE WATER HEATER CAUSED BY EXPOSURE TO CORROSIVE VAPORS IS NOT COVERED BY THE WARRANTY. DO NOT OPERATE THE WATER HEATER IF EXPOSURE HAS OR WILL OCCUR. DO NOT STORE ANY POTENTIALLY CORROSIVE COMPOUNDS IN THE VICINITY OF THE WATER HEATER.**

⚠ WARNING

DO NOT ATTEMPT TO LIGHT ANY GAS APPLIANCE IF YOU ARE NOT CERTAIN OF THE FOLLOWING:

- Liquefied petroleum gases/propane gas and natural gas have an odorant added by the gas supplier that aids in detection of the gas.
- Most people recognize this odor as a “sulfur” or “rotten egg” smell.
- Other conditions, such as “odorant fade” can cause the odorant to diminish in intensity, or “fade”, and not be as readily detectable.
- If you have a diminished sense of smell, or are in any way unsure of the presence of gas, immediately contact your gas supplier from a neighbor’s telephone.
- Gas detectors are available. Contact your gas supplier or plumbing professional for more information.

⚠ WARNING

Liquefied petroleum gases/propane gases are heavier than air and will remain at floor level if there is a leak. Basements, crawl spaces, closets and areas below ground level will serve as pockets for accumulation of leaking gas. Before lighting, smell all around the appliance area for gas. Be sure to smell next to the floor.

IF YOU SMELL GAS:

- Do not try to light any appliance.
- Do not touch any electric switch; do not use any telephone in your building.
- Immediately call your gas supplier from a neighbor's telephone. Follow the gas supplier's instructions.
- If you cannot reach your gas supplier, call the fire department.

DO NOT OPERATE APPLIANCE UNTIL LEAKAGE IS CORRECTED!

Proper venting practices must be considered when selecting a location for this water heater. For exact venting specifications, please consult the Venting section, located on page 9, of these Installation and Operating Instructions.

This water heater must be located in an area where leakage of the tank, water line connections, or the combination temperature and pressure relief valve will not result in damage to the area adjacent to the water heater or to lower floors of the structure. When such locations cannot be avoided, a suitable drain pan must be installed under the water heater. The drain pan must have a minimum length and width of at least 4 in. *(10.2 cm)* greater than the diameter of the water heater and must not restrict proper combustion air flow to the water heater. The drain pan, as described above, can be purchased from your plumbing professional. The drain pan must be piped to an adequate drain. The piping must be at least 3/4 inch *(1.9 cm)* in diameter and pitched for proper drainage.

It is recommended that a minimum clearance of four (4) inches *(10.2 cm)* be provided on the side of the water heater for servicing and maintenance of the combination temperature and pressure relief valve.

To comply with NSF requirements this water heater is to be:

a) Sealed to the floor with sealant, in a smooth and easily cleanable way, or
b) Installed with an optional leg kit that includes legs and/or extensions that provide a minimum clearance of 6" beneath the water heater.

Minimum Clearances

⚠ WARNING

Failure to adhere to these installation and operating instructions may create a hazard to life and property and will nullify the warranty.

This installation must allow access to the front of the water heater and adequate clearance must be provided for servicing and operating this water heater. The water heater may be installed on either a combustible or non-combustible floor. If the water heater is to be installed directly on carpeting, it must be installed on top of a metal or wood panel (or equivalent) extending beyond the full width and depth of the appliance by at least three (3) inches *(7.6 cm)* in any direction or, if the appliance is to be installed in an alcove or closet, the entire floor must be covered by the panel, increase distances to provide clearance for servicing. **If the rating plate or the label on the front of the water heater specifies minimum clearances less than those listed in the below table, the water heater may be installed in accordance with the minimum clearances listed on the rating plate or the label on the front of the water heater.**

If it is necessary to install this water heater in an alcove, use the clearances listed in the following table and Figure 1.

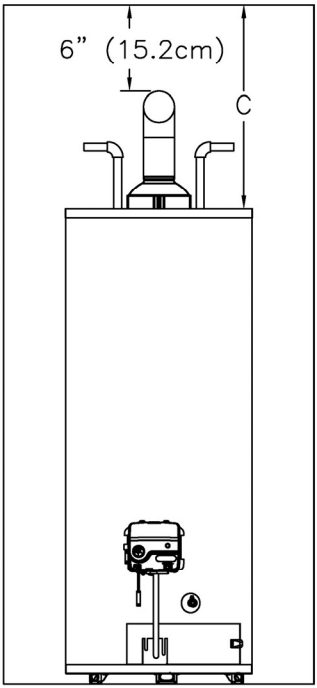

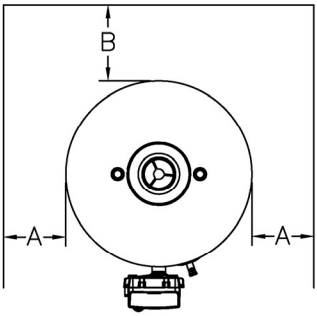

Minimum Clearances From Combustible Matierals For Alcove Installation

A	6" (15.2cm)
B	6" (15.2cm)
C	26" (66cm)
VENT	6" (15.2cm)

Figure 1

Venting

⚠ WARNING

The venting system must be installed properly following all local codes or in the absence of local codes, the latest edition of the National Fuel Gas Code (ANSI Z223.1- latest edition), or in Canada, The Natural Gas and Propane Installation Code (B149.1-00 latest edition). Failure to properly install the venting system could result in property damage, personal injury, or death.

⚠ WARNING

Carefully inspect the venting system of a replacement water heater installation before connecting to the venting system. All joints in the vent connector must be securely fastened with screws and fit tightly together. Inspect the venting system for signs of deterioration (rust and perforation) and replace any sections that are not in good condition.

The chimney must be lined and in good condition. Check to make sure the venting system is properly sized for the water heater. If the venting system was previously sized for another gas appliance that has been removed, the venting system may now be too large. Refer to the latest edition of the National Fuel Gas Code (ANSI Z223.1-latest edition), or in Canada, the Natural Gas and Propane Installation Code (B149.1-00 latest edition) for the correct sizing of venting systems and common venting with another gas appliance.

Do not vent this water heater into the venting system of another gas appliance designed to vent under positive pressure.

The water heater should be installed as close as practical to the venting system to minimize the vent connector length required. Refer to local codes for the distance limitations on vent connector lengths.

At the completion of the water heater installation, the burner and venting system must be checked for proper operation with all other commonly vented appliances in operation. Check for spillage of flue products around the outside relief opening of the draft hood after several minutes of operation. The flame from a match should be drawn into the draft hood. Do not use the water heater or connected equipment if spillage is detected until the problem is corrected. Refer to the latest edition of the National Fuel Gas Code, or in Canada, the Natural Gas and Propane Installation Code for complete details on the “Procedure to Be Followed to Place Equipment in Operation”.

This water heater has been shipped with a draft diverter for which it was designed with reference to the horizontal and vertical planes. If removed, the draft diverter must be replaced in the same position and secured to the jacket top by the screws with which it was installed.

This water heater must be connected to a lined masonry chimney or venting system approved by local codes or ordinances. The vent connector used to attach the draft diverter outlet to the chimney or approved vent must be of the same diameter as the draft diverter outlet or larger. For proper venting in certain installations, a larger vent connector may be needed. Consult venting tables in ANSI standard (Z223.1-or latest edition), National Fuel Gas Code and CAN/CGA (B149.1 or B149.2-latest editions) Natural Gas and Propane Installation Code, or local code officials for proper application for your area.

Combustion Air Supply

⚠ WARNING

Liquefied petroleum gases/propane gases are heavier than air and will remain at floor level if there is a leak. Basements, crawl spaces, closets and areas below ground level will serve as pockets for accumulation of leaking gas. Before lighting, smell all around the appliance area for gas. Be sure to smell next to the floor.

IF YOU SMELL GAS:

- Do not try to light any appliance.
- Do not touch any electric switch; do not use any telephone in your building.
- Immediately call your gas supplier from a neighbor's telephone. Follow the gas supplier's instructions.
- If you cannot reach your gas supplier, call the fire department.

DO NOT OPERATE APPLIANCE UNTIL LEAKAGE IS CORRECTED!

IMPORTANT

The flow of combustion and ventilating air must not be obstructed.

Provide adequate air for combustion and ventilation. An insufficient supply of air will cause recirculation of combustion products resulting in air contamination that may be hazardous to life. Such a condition often will result in a yellow, luminous burner flame, causing carboning or sooting of the combustion chamber, burners and flue tubes with possible damage to the water heater. When an exhaust fan is installed in the same room with a water heater, sufficient openings for air must be provided in the walls. Undersized openings will cause air to be drawn into the room through the chimney, causing recirculation of combustion products.

Confined Spaces

Confined spaces are spaces defined as having less than 50 ft.^{3}/1000 BTU *(1.41m^3/.29kw)* per hour.

Unconfined Spaces

In unconfined spaces in buildings, infiltration may be adequate to provide air for combustion, ventilation and dilution of flue gases. However, in buildings of tight construction (for example, weather stripping, heavily insulated, caulked, vapor barrier, etc.), additional air may need to be provided using the methods described above under CONFINED SPACES: All Air from Outdoors or SPECIALLY ENGINEERED INSTALLATIONS.

All Air From Inside the Building: The confined space must be provided with two permanent openings communicating directly with an additional room(s) of sufficient volume so that the combined volume of all spaces meets the criteria for an unconfined space. The total input of all gas utilization equipment installed in the combined space must be considered in making this determination. Each opening must have a minimum free area of 1 square inch per 1000 BTU *(6.45cm^2/.29kw)* per hour of the total input rating of all gas utilization equipment in the confined space, but not less than 100 square inches *(645 cm^2)*. One opening must be within 12 inches *(31 cm)* of the top and one within 12 inches *(31 cm)* of the bottom of the enclosure.

All Air from Outdoors: The confined space must be provided with two permanent openings, one commencing within 12 inches *(31cm)* of the top and one commencing within 12 inches *(31cm)* from the bottom of the enclosure. The openings must communicate directly, or by ducts, with the outdoors or spaces (crawl or attic) that freely communicate with the outdoors.

1. When directly communicating with the outdoors, each opening must have a minimum free area of 1 square inch per 4000 BTU *(6.45 cm^2/1.2kw)* per hour of total input rating of all equipment in the enclosure.
2. When communicating with the outdoors through vertical ducts, each opening must have a minimum free area of 1 square inch per 4000 BTU *(6.45cm^2/1.2kw)* per hour of total input rating of all equipment in the enclosure.
3. When communicating with the outdoors through horizontal ducts, each opening must have a minimum free area of 1 square inch per 2000 BTU *(6.45cm^2/.6kw)* per hour of total input rating of all equipment in the enclosure.
4. When ducts are used, they must be of the same cross-sectional area as the free area of the openings to which they connect. The minimum dimension of rectangular air ducts must be not less than 3 inches *(7.5 cm)*

Specially Engineered Installations
The requirements noted under CONFINED SPACES above must not necessarily govern when special engineering, approved by the authority having jurisdiction, provides an adequate supply of air for combustion, ventilation, and dilution of flue gases.

Water Connections

Note: BEFORE PROCEEDING WITH THE INSTALLATION, CLOSE THE MAIN WATER SUPPLY VALVE.

After shutting off the main water supply, open a faucet to relieve the water line pressure to prevent any water from leaking out of the pipes while making the water connections to the water heater. After the pressure has been relieved, close the faucet. The COLD water inlet and HOT water outlet are identified on the top of the water heater. The fittings at the cold water inlet and hot water outlet are dielectric waterway fittings with 3/4" NPT male thread. Make the proper plumbing connections between the water heater and the plumbing system to the house. Install a shut-off valve in the cold water supply line.

⚠ CAUTION

If sweat fittings are to be used, **DO NOT** apply heat to the nipples on top of the water heater. Sweat the tubing to the adapter before fitting the adapter to the water connections. It is imperative that heat is not applied to the nipples containing a plastic liner.

⚠ WARNING

FAILURE TO INSTALL AND MAINTAIN A NEW, LISTED 3/4" X 3/4" TEMPERATURE AND PRESSURE RELIEF VALVE WILL RELEASE THE MANUFACTURER FROM ANY CLAIM, WHICH MIGHT RESULT FROM EXCESSIVE TEMPERATURE AND PRESSURES.

If this water heater is installed in a closed water supply system, such as one having a back-flow preventer in the cold water supply, provisions must be made to control thermal expansion. **DO NOT** operate this water heater in a closed system without provisions for controlling thermal expansion. Your water supplier or local plumbing inspector should be contacted on how to control this situation.

After installation of the water lines, open the main water supply valve and fill the water heater. While the water heater is filling, open several hot water faucets to allow air to escape from the water system. When a steady stream of water flows through the faucets, close them and check all water connections for possible leaks. **NEVER OPERATE THE WATER HEATER WITHOUT FIRST BEING CERTAIN IT IS FILLED WITH WATER.**

⚠ WARNING

For protection against excessive temperatures and pressure, install temperature and pressure protective equipment required by local codes, but not less than a combination temperature and pressure relief valve certified by a nationally recognized testing laboratory that maintains periodic inspection of production of listed equipment or materials as meeting the requirements of the Standard for *Relief Valves and Automatic Gas Shutoff Devices for Hot Water Supply Systems, ANSI Z21.22 or the Standard CAN1-4.4. Temperature and Pressure* and the Standard *CAN1-4.4, Temperature, Pressure, Temperature and Pressure Relief Valves and Vacuum Relief Valves*. The combination temperature and pressure relief valve must be marked with a maximum set pressure not to exceed the maximum working pressure of the water heater. The combination temperature and pressure relief valve must also have an hourly rated temperature steam BTU discharge capacity not less than the hourly rating of the water heater.

Install the combination temperature and pressure relief valve into the opening provided and marked for this purpose on the water heater.

Note: Some models may already be equipped or supplied with a combination temperature and pressure relief valve. Verify that the combination temperature and pressure relief valve complies with local codes. If the combination temperature and pressure relief valve does not comply with local codes, replace it with one that does. Follow the installation instructions above on this page.

Install a discharge line so that water discharged from the combination temperature and pressure relief valve will exit within six (6) inches *(15.2 cm)* above, or any distance below the structural floor and cannot contact any live electrical part. The discharge line is to be installed to allow for complete drainage of both the combination temperature and pressure relief valve and the discharge line. The discharge opening must not be subjected to blockage or freezing. **DO NOT** thread, plug or cap the discharge line. It is recommended that a minimum clearance of four (4) inches *(10.2 cm)* be provided on the side of the water heater for servicing and maintenance of the combination temperature and pressure relief valve.

Do not place a valve between the combination temperature and pressure relief valve and the tank.

⚠ WARNING

Hydrogen gas can be produced in an operating water heater that has not had water drawn from the tank for a long period of time (generally two weeks or more). Hydrogen gas is extremely flammable. To prevent the possibility of injury under these conditions, we recommend the hot water faucet to be open for several minutes at the kitchen sink before you use any electrical appliance, which is connected to the hot water system. If hydrogen is present, there will be an unusual sound such as air escaping through the pipes as hot water begins to flow. Do not smoke or have open flame near the faucet at the time it is open.

This water heater can deliver scalding temperature water at any faucet in the system. Be careful whenever using hot water to avoid scalding injury. Certain appliances such as dishwashers and automatic clothes washers may require increased temperature water. By setting the thermostat on this water heater to obtain the increased temperature water required by these appliances, the potential for scald injury increases. To protect against injury, you should install an ASSE approved mixing valve in the water system. This valve will reduce point of discharge temperature by mixing cold and hot water in branch supply lines. Such valves are available from the manufacturer of this water heater or a local plumbing supplier. Please consult with a plumbing professional.

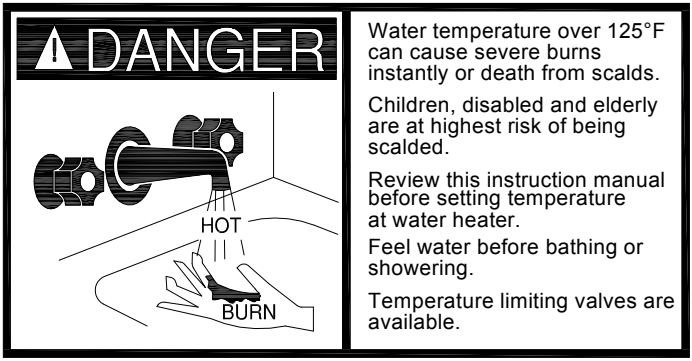

APPROXIMATE TIME/TEMPERATURE RELATIONSHIPS IN SCALDS	
120°F *(49°C)*	More than 5 minutes
125°F *(52°C)*	1½ to 2 minutes
130°F *(54°C)*	About 30 seconds
135°F *(57°C)*	About 10 seconds
140°F *(60°C)*	Less than 5 seconds
145°F *(63°C)*	Less than 3 seconds
150°F *(66°C)*	About 1½ seconds
155°F *(68°C)*	About 1 second

Gas Connections

The gas supply lines must meet all requirements of the National Fuel Gas Code (ANSI Z223.1-Latest Edition), or in Canada CAN/CGA B149.1 Natural Gas Installation Code (Latest Edition) or CAN/CGA B149.2 Propane Installation Code (Latest Edition).

The minimum permissible gas supply pressure for the purpose of input adjustment is one (1.0) inch *(0.25 kPa)* water column above the operating manifold pressure. See the rating plate and gas valve for the manifold pressure and gas type. The maximum permissible gas supply pressure is fourteen (14.0) inches *(3.5 kPa)* water column for natural gas and liquefied petroleum gases/propane gas.

1. Connect this water heater only to the type of gas (Natural or Propane gas) as shown on the rating plate. Use clean black iron pipe or equivalent material approved by local codes and ordinances. (Dirt and scale from the pipe can enter the gas valve and cause it to malfunction). The inlet gas line must have a minimum length of three (3) inches *(7.6 cm)* drip leg *(sediment trap)* installed as close to the water heater's gas valve as possible. A ground joint union must be installed as close to the water heater as possible in the gas supply line feeding the water heater to permit servicing of the water heater. Compounds used on the threaded joints of the gas piping must be resistant to the action of liquefied petroleum gases/propane gas. DO NOT apply pipe dope to the gas valve inlet and make certain that no pipe dope has become lodged in the inlet screen of the gas valve. Extreme care must be taken to ensure no pipe dope enters the gas valve. Avoid excessive torque when tightening the gas supply line to the gas valve. Excessive torque may result in cracking of the gas valve housing and could create a gas leak. When tightening gas supply line to L.P. control, it is recommended to hold the inlet body of the control securely with an adequate wrench. The suggested maximum torque is 31.5 ft. lbs. (4.4 kg-m).

⚠ WARNING

The manufacturer of this water heater will not be liable for any damage or injury caused as a result of a cracked gas inlet as a result of excessive torque.

2. This water heater and its gas connection must be leak tested before placing the water heater in operation. Check for gas leaks with a soap and water solution and a brush or a commercial leak detector fluid. **NEVER USE A MATCH OR OPEN FLAME FOR TESTING!**

⚠ CAUTION

The water heater and individual shutoff valve must be disconnected from the gas supply piping system during any pressure testing of the system at test pressures in excess of 1/2 psi (3.5 kPa). The water heater must be isolated from the gas supply piping system by closing its manual shutoff valve during any pressure testing of the gas supply system at test pressures equal to or less than 1/2 psi (3.5 kPa). The supply line must be capped when not connected to the water heater.

3. While checking for leaks care must be taken to prevent solution from contacting the electrical connections at the control. If electrical connections at the control become wet, they must be thoroughly dried before attempting to operate the water heater.

⚠ WARNING

The gas inlet pressure to the gas control must never exceed 14 inches of water column (1/2 psi). The gas supply system and any pressure regulating device in the gas line must be specified, inspected and adjusted to assure a gas supply pressure of 1/2 psi or less. Failure to do so may result in serious injury or death.

GENERAL OPERATION

⚠ WARNING

Water heaters are heat producing appliances. To avoid damage or injury there must be no materials stored against the water heater or vent-air intake system, and proper care must be taken to avoid unnecessary contact (especially by children) with the water heater and vent-air intake system. **UNDER NO CIRCUMSTANCES SHALL FLAMMABLE MATERIALS, SUCH AS GASOLINE OR PAINT THINNER TO BE USED OR STORED IN THE VICINITY OF THIS WATER HEATER, VENT-AIR INTAKE SYSTEM OR IN ANY LOCATION FROM WHICH FUMES COULD REACH THE WATER HEATER OR VENT-AIR INTAKE SYSTEM.**

TO FILL THE WATER HEATER

1. Close the water heater drain valve by turning the knob clockwise ↻.
2. Open the cold water supply shut-off valve.
3. Open several hot water faucets to allow air to escape from the system.
4. When a steady stream of water flows from the faucets, the water heater is filled. Close the faucets and check for water leaks at the water heater drain valve, combination temperature and pressure relief valve and the hot and cold water connections.

TO DRAIN THE WATER HEATER

Should it become necessary to completely drain the water heater, make sure you follow the steps below:

1. For the White Rogers control, rotate the thermostat dial clockwise to the lowest possible position, OR for the Robertshaw and Honeywell controls, rotate the thermostat dial counter-clockwise to the lowest possible position.
2. For the White Rogers control, partially depress and rotate the gas control knob clockwise to the “OFF” position, OR for the Robertshaw control, rotate the gas control knob clockwise to the “OFF” position.
3. Shut off the gas supply to the water heater.
4. Close the cold water supply shut-off valve.
5. Open the drain valve on the water heater by turning the knob counter-clockwise . The drain valve has threads on the end that will allow the connection of a standard hose coupling.
6. Open a hot water faucet to allow air to enter the system.

To refill the water heater, refer to “To Fill the Water Heater.”

⚠ WARNING

Wait at least (2) minutes after this control is pressurized with gas before attempting to light pilot and/or push igniter button. Failure to do so may result in serious injury.

Lighting & Shut Down Instructions-White Rodgers and Robertshaw gas control.

FOR YOUR SAFETY READ BEFORE LIGHTING

WARNING: If you do not follow these instructions exactly, a fire or explosion may result causing property damage, personal injury or loss of life.

This appliance has a pilot which must be lighted by hand. When lighting the pilot, follow these instructions exactly.

BEFORE LIGHTING smell all around the appliance area for gas. Be sure to smell next to the floor because some gas is heavier than air and will settle on the floor.

WHAT TO DO IF YOU SMELL GAS

- Do not try to light any appliance.
- Do not touch any electric switch; do not use any telephone in your building.
- Immediately call your gas supplier from a neighbor's phone. Follow the gas supplier's instructions.
- If you cannot reach your gas supplier, call the fire department.

Use only your hand to push in or turn the gas control knob. Never use tools. If the knob will not push in or turn by hand, don't try to repair it, call a qualified service technician. Force or attempted repair may result in a fire or explosion.

Do not use this appliance if any part has been under water. Immediately call a a qualified service technician to inspect the appliance and to replace any part of the control system and any gas control which has been under water.

LIGHTING INSTRUCTIONS

1. STOP! Read the safety information above on this label.
2. If applicable, turn off all electric power to the appliance.
3. Set the thermostat to lowest setting.
4. Rotate and if applicable partially depress gas control knob clockwise to "OFF" position.

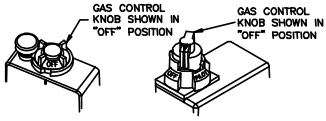

EXHIBIT A EXHIBIT B

NOTE: On exhibit B controls, knob cannot be turned from "PILOT" to "OFF" unless knob is depressed slightly. Do not force.

5. Wait five (5) minutes to clear out any gas. Then smell for gas, including near the floor. If you smell gas, STOP! Follow "WHAT TO DO IF YOU SMELL GAS" in the safety information above on this label. If you don't smell gas, go to the next step.
6. Remove outer door. Remove inner door or slide it open.
7. Find pilot. Follow aluminum tube from the "right underside" of the gas control. The pilot is adjacent to the burner.

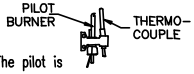

8. Turn the gas control knob counterclockwise to "PILOT" position.

9a. FOR EXHIBIT A GAS CONTROLS–
Depress and hold down red pilot set button. Immediately light the pilot with a match. Continue to hold down the button for about one (1) minute after the pilot is lit. Release button and it should pop back up. Pilot should remain lit. If it goes out, repeat steps 4 through 9.

9b. FOR EXHIBIT B GAS CONTROLS–
Depress and hold down gas control knob. Immediately light the pilot with a match. Continue to hold down the knob for about one (1) minute after the pilot is lit. Release the knob and it should pop back up. Pilot should remain lit. If it goes out, repeat steps 4 through 9.

FOR EXHIBIT A & B GAS CONTROLS–

- If button or knob does not pop up when released, stop and immediately call your service technician or gas supplier.
- If the pilot will not stay lit after several tries, turn the gas control knob to "OFF" and call your technician or gas supplier.

10. Replace inner door or slide it closed.
11. Turn gas control knob counterclockwise to "ON" position.
12. Set thermostat to desired setting.
13. If applicable, turn on all electric power to the appliance.

TO TURN OFF GAS TO APPLIANCE

1. Turn off all electric power to the appliance if service is to be performed.
2. Set the thermostat to lowest setting.
3. Rotate and if applicable partially depress gas control knob clockwise to "OFF" position.

Lighting and Shutdown Instructions-Honeywell gas control.

FOR YOUR SAFETY READ BEFORE LIGHTING

WARNING: If you do not follow these instructions exactly, a fire or explosion may result causing property damage, personal injury or loss of life.

A. This appliance has a pilot which is lit by a piezo-electric spark gas ignition system. Do not open the inner door and attempt to light the pilot by hand.

B. BEFORE LIGHTING smell all around the appliance area for gas. Be sure to smell next to the floor because some gas is heavier than air and will settle on the floor.

WHAT TO DO IF YOU SMELL GAS.
* Do not try to light any appliance.
* Do not touch any electric switch; do not use any phone in your building.
* Immediately call your gas supplier from a neighbor's phone. Follow the gas supplier's instructions.
* If you cannot reach your gas supplier, call the fire department.

C. Use only your hand to push in or turn the gas control knob. Never use tools. If the knob will not push in or turn by hand, don't try to repair it, call a qualified service technician. Force or attempted repair may result in a fire or explosion.

D. Do not use this appliance if any part has been under water. Immediately call a qualified service technician to inspect the appliance and to replace any part of the control system and any gas control which has been under water.

LIGHTING INSTRUCTIONS

1. STOP! Read the safety information above on this label.
2. Set the gas control knob to the "OFF" position.

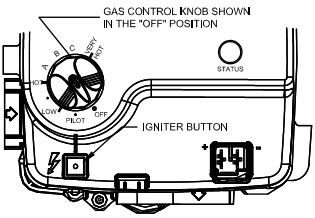

3. Wait five (5) minutes to clear out any gas. Then smell for gas, including near the floor. If you smell gas, STOP! Follow "B" in the safety information above this label. if you don't smell gas, go to the next step.
4. Remove outer door. Remove inner door or slide it open.
5. Locate igniterbutton.
6. Turn the gas control knob clockwise to "PILOT" position.
7. Depress and hold in gas control knob. Immediately press igniter button until you hear a "click" sound, then release. Continue to hold down the gas control knob until the status light blinks. Release the gas control knob. It should pop back out. Check to see if the pilot is still lit. If the pilot goes out, repeat steps 2 through 7.
   - If gas control knob does not pop out when released, stop and immediately call your service technician or gas supplier.
   - if the pilot will not stay lit after several tries, turn the gas control knob to "OFF" and call your technician or gas supplier.
8. Replace inner door or slie it closed. Replace outer door.
9. Turn gas control knob to desired setting.

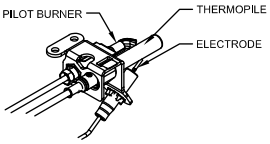

TO TURN OFF GAS TO APPLIANCE

1. Turn the gas control knob counterclockwise to the "OFF" position.

THERMOSTAT ADJUSTMENT-White Rodgers gas control.

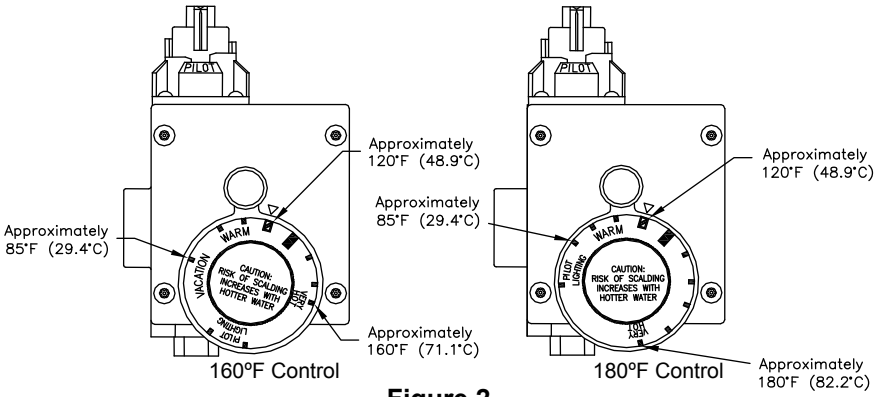

Figure 2

The thermostat dial is set to its lowest temperature setting when shipped from the factory. **Remember that lower temperature settings are more energy efficient**. Adjust the temperature by turning the thermostat dial. It is suggested that the starting point setting not be greater than the "▯" or "▲"mark on the thermostat dial (approximately 120°F [48.9°C]) as indicated above.

Rotate the thermostat dial **clockwise** to <u>decrease</u> the temperature setting. Rotate the thermostat dial **counter-clockwise** to <u>increase</u> the temperature setting. Adjust the dial until the minimum acceptable temperature is achieved (See figure 2 above for approximate temperature settings).

Robertshaw gas control.

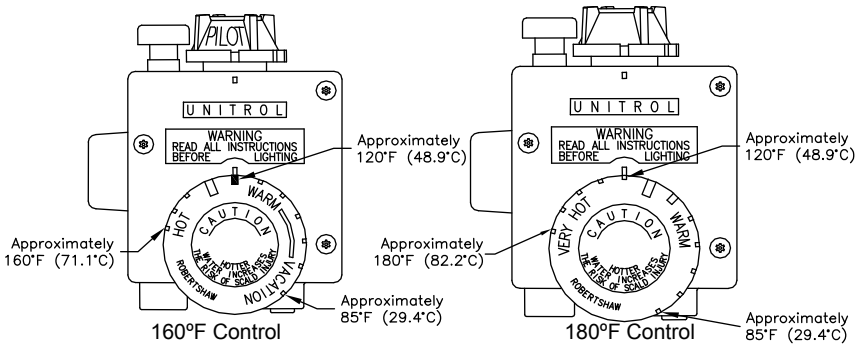

Figure 3

The thermostat dial is set to its lowest temperature setting when shipped from the factory. **Remember that lower temperature settings are more energy efficient**. Adjust the temperature by turning the thermostat dial. It is suggested that the starting point setting not be greater than the "▮" mark on the thermostat dial (approximately 120°F [48.9°C]) as indicated above. Rotate the thermostat dial **counter-clockwise** to <u>decrease</u> the temperature setting. Rotate the thermostat dial **clockwise** to <u>increase</u> the temperature setting. Adjust the dial until the minimum acceptable temperature is achieved (See figure 3 above for approximate temperature settings).

THERMOSTAT ADJUSTMENT - Honeywell gas control.

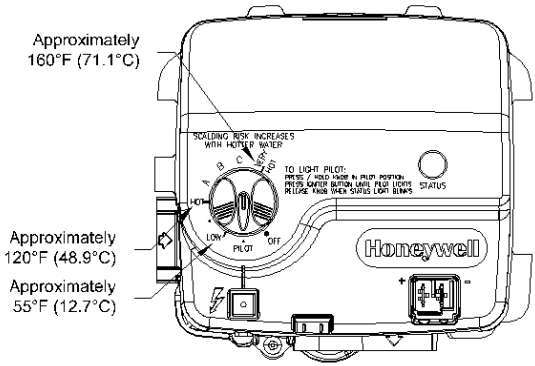

160°F (71.1°C) Control (Taupe / Silver faceplate)

Figure 4

The thermostat dial is set to its lowest temperature setting when shipped from the factory. **Remember that lower temperature settings are more energy efficient**. Adjust the temperature by turning the thermostat dial. It is suggested that the starting point setting not be greater than the "HOT" mark on the thermostat dial (approximately 120°F [*48.9°C*]) as indicated above. Rotate the thermostat dial **counter-clockwise** to <u>decrease</u> the temperature setting. Rotate the thermostat dial **clockwise** to <u>increase</u> the temperature setting. Adjust the dial until the minimum acceptable temperature is achieved (See figure 4 above for approximate temperature settings).

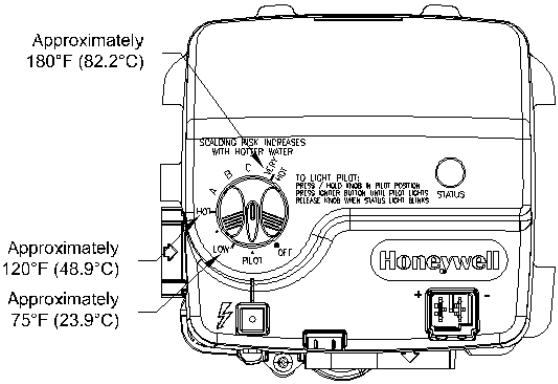

180°F (82.2°C) Control (Dark (Battleship) Grey faceplate)

Figure 5

The thermostat dial is set to its lowest temperature setting when shipped from the factory. **Remember that lower temperature settings are more energy efficient**. Adjust the temperature by turning the thermostat dial. It is suggested that the starting point setting not be greater than the "HOT" mark on the thermostat dial (approximately 120°F [*48.9°C*]) as indicated above. Rotate the thermostat dial **counter-clockwise** to <u>decrease</u> the temperature setting. Rotate the thermostat dial **clockwise** to <u>increase</u> the temperature setting. Adjust the dial until the minimum acceptable temperature is achieved (See figure 5 above for approximate temperature settings).

⚠ DANGER

Hotter water increases the risk of scald injury. Scalding may occur within five (5) seconds at a temperature setting of 140°F *(60°C)*. To protect against hot water injury, install an ASSE approved mixing valve in the water system. This valve will reduce point of discharge temperature by mixing cold and hot water in branch water lines. A licensed plumbing professional or local plumbing authority should be consulted. **Note:** This water heater is equipped with an energy cut out device to prevent overheating. Should overheating occur or the gas supply fails to shut off, turn off the manual gas control valve to the appliance and call a qualified service technician. **Note:** Whenever the water heater is filled with cold water, condensate will form on the cool tank surface and drops of water will fall on the hot burner and combustion chamber surfaces producing a "sizzling" noise. Condensation is normal and does not indicate a leak. It will disappear when the tank becomes heated.

BURNER FLAME CHECKS

Cast Iron Burner: At the time of installation and at periodic intervals (not more than 6 months), a visual check of the main burner and pilot flames should be made to determine if they are burning properly. For ideal operation, the gas and air must be properly proportioned. The proper air-gas mixture is obtained by adjusting the air shutter on the mixer face of the main burner *(See Figure 6).* To adjust for proper burning, loosen the air shutter nut, rotate shutter to close the opening in the burner then slowly rotate the shutter until the yellow tips disappear and the flame becomes blue. Tighten the air shutter nut. Too much air will cause the flame to lift off the burner ports and create noisy operation. Too little air will result in soot formation. The main burner flame should light smoothly from the pilot.

Steel Burner: These models are equipped with self adjusting air mixture and do not have an adjustable air shutter (*See Figure* 7). At periodic intervals, a visual check of the main burner and pilot flames should be made to determine if they are burning properly. The main burner flame should light smoothly from the pilot.

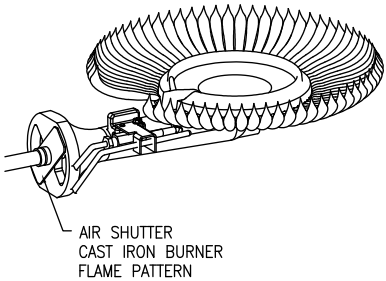

Figure 6

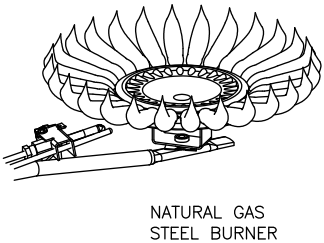

Figure 7

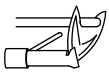

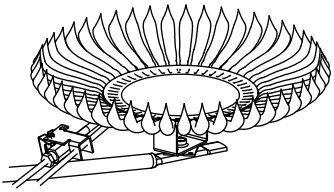

⚠ WARNING

Do not run out of propane gas. Damage to the water heater may occur.

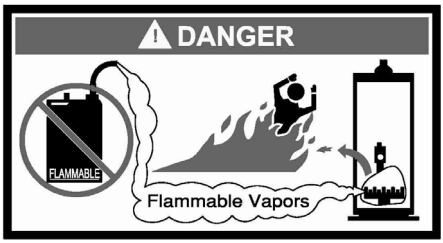

⚠ WARNING

Water heaters are heat producing appliances. To avoid damage or injury there must be no materials stored against the water heater or vent-air intake system, and proper care must be taken to avoid unnecessary contact (especially by children) with the water heater and vent-air intake system. **UNDER NO CIRCUMSTANCES SHALL FLAMMABLE MATERIALS, SUCH AS GASOLINE OR PAINT THINNER TO BE USED OR STORED IN THE VICINITY OF THIS WATER HEATER, VENT-AIR INTAKE SYSTEM OR IN ANY LOCATION FROM WHICH FUMES COULD REACH THE WATER HEATER OR VENT-AIR INTAKE SYSTEM.**

MAINTENANCE

The following maintenance should be performed by a qualified service technician at the minimum periodic intervals suggested below. In some installations, the maintenance interval may be more frequent depending on the amount of use and the operating conditions of the water heater. Regular inspection and maintenance of the water heater and vent-air intake system will help to insure safe and reliable operation.

1. Annually check the operation of the thermostat.

2. The flow of combustion and ventilation air **MUST NOT** be restricted. Clear the combustion air openings of any dirt, dust, or other restrictions. **WARNING!** The ventilation air system may be **HOT**.

IMPORTANT

The water heater should be inspected at a minimum annually by a qualified service technician for damaged components and/or joints not sealed. DO NOT operate this water heater if any part is found damaged or if any joint is found not sealed.

3. At all times keep the water heater area clear and free from combustible materials, gasoline and other flammable vapors and liquids.

4. Bi-annually conduct a visual check of the main and pilot burner flames to determine that they are burning properly. See Burner Flame Check section.

5. Annually remove the inner door and main burner assembly to clean orifices and related parts of any dirt or other foreign material. Inspect the burner ports for obstructions or debris and clean with a wire brush as needed. Wire brush and/or vacuum clean the combustion chamber as needed to remove scale deposits and debris. **NOTE:** It is imperative for proper operation of the water heater that the inner door be replaced in the original location.

⚠ WARNING

When lifting lever of the combination temperature and pressure relief valve, hot water will be released under pressure. Be careful that any released water does not result in bodily injury or property damage.

⚠ WARNING

Do not run out of propane gas. Damage to the water heater may occur.

6. At least once a year, check the combination temperature and pressure relief valve to insure that the valve has not become encrusted with lime. Lift the lever at the lever at the top of the valve several times until the valve seats properly without leaking and operates freely.

7. Monthly drain off a gallon of water to remove silt and sediment.

⚠ WARNING

THIS WATER MAY BE HOT.

8. If the combination temperature and pressure relief valve on the appliance discharges periodically, this may be due to thermal expansion in a closed water supply system. Contact the water supplier or local plumbing inspector on how to correct this situation. Do not plug the combination temperature and pressure relief valve outlet.

9. A combination sacrificial anode rod/hot water outlet nipple has been installed to extend tank life. The anode rod should be inspected periodically (every 2 years) and replaced when necessary to prolong tank life. Water conditions in your area will influence the time interval for inspection and replacement of the anode rod. Contact the plumbing professional who installed the water heater or the manufacturer listed on the rating plate for anode replacement information. The use of a water softener may increase the speed of anode consumption. More frequent inspection of the anode is needed when using softened (or phosphate treated) water.

⚠ CAUTION

FOR YOUR SAFETY, **DO NOT** ATTEMPT REPAIR OF COMBINATION GAS CONTROL, BURNERS OR GAS PIPING. REFER REPAIRS TO A QUALIFIED SERVICE TECHNICIAN.

Contact your supplier or plumbing professional for replacement parts or contact the company at the address given on the rating plate of the water heater.

Provide the part name, model and serial numbers of the water heater when ordering parts.

READ THE WARRANTY FOR A FULL EXPLANATION OF THE LENGTH OF TIME THAT PARTS AND THE WATER HEATER ARE WARRANTED.

Maintenance continued-

Manufactured under one or more of the following U.S. Patents: 5,277,171; 5,341,770; 5,372,185; 5,485,879; 5,574,822; 5,596,952; 5,660,165; 5,682,666; 5,761,379; 5,943,984; 5,954,492; 5,988,117; 6,056,542; 6,142,216; 6,442,178; 6,684,821; 6,935,280; 7,063,132; 7,063,133; 7,007,748; 7,270,087; 7,334,419; 7,337,517; 7,409,925; 7,458,341; 7,559,293; 7,621,238; 7,634,976; 7,650,859; 7,665,210; 7,665,211; 7,699,026; 7,866,168; 7,900,589; 7,971,560; 7,992,526 8,082,888; 8,146,772; Other U.S. and Foreign patent applications pending. Current Canadian Patents: 2,092,105; 2,107,012; 2,108,186; 2,112,515; 2,143,031; 2,239,007; 2,262,174; 2,314,845; 2,409,271; 2,476,685; 2,504,824; 2,548,958

Complete the following information and retain for future reference:

Model No:_____

Serial No:_____

Service Phone
Days:_____ Nights:_____

Address:_____

Supplier:_____

Supplier Phone No:_____

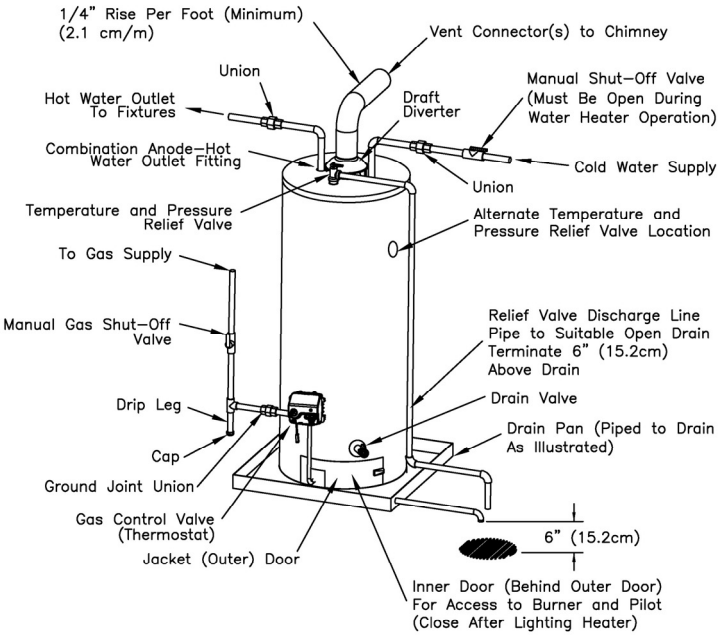

Figure 8

PARTS LIST AND DRAWING

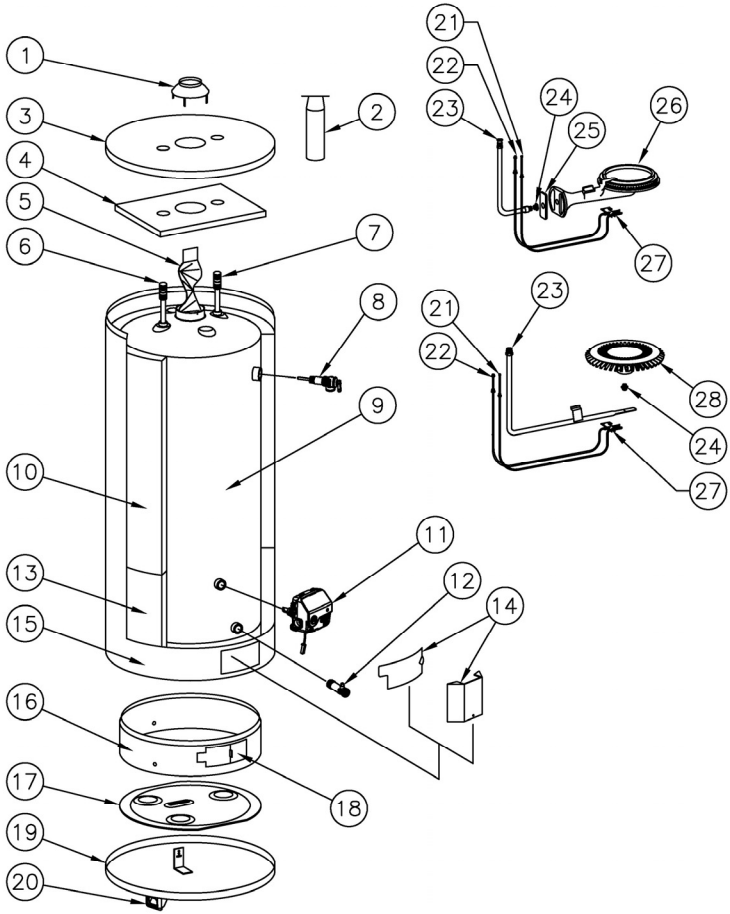

PART NAME AND DESCRIPTION	
1. Draft Diverter	15. Jacket
2. Flue Core Assembly (Certain Models)	16. Combustion Chamber
3. Jacket Head Pan	17. Radiation Shield
4. Fiberglass Head Insulation	18. Combustion Chamber Door
5. Flue Baffle Assembly	19. Jacket Base Pan
6. Magnesium Anode-Hot Water Outlet	20. Heater Leg
7. Dip Tube-Cold Water Inlet	21. Thermocouple Lead
8. Temperature and Pressure Relief Valve	22. Gas Feedline to Pilot
9. Glass Lined Tank	23. Gas Feedline to Burner
10. Foam Insulation	24. Orifice
11. Combination gas control & thermostat	25. Air Shutter (Cast Iron Burner Only)
12. Drain Valve	26. Cast Iron Burner
13. Fiberglass Insulation	27. Pilot Assembly
14. Outer Door (Varies by Model)	28. Steel Burner (Varies by Model)

TROUBLESHOOTING CHART

(for Honeywell gas control equipped models)

LED Status	Control Status	Probable Cause
None (LED not on or flashing).	Millivolt power is not present. Light pilot.	1. Gas valve is functioning normally. 2. Gas valve is not powered. Light pilot.
One flash and three second pause.	If set point knob is in "PILOT" position then pilot flame is detected. **(no faults)**.	Gas valve is powered and waiting for the set point knob to be turned to a water temperature setting. If the set point knob is at desired setting the thermostat is satisfied.
LED strobe (two quick flashes) and three second pause.	Thermostat calling for heat **(no faults)**.	Water heater operating normally.
LED on continuously.	Set point knob has been recently turned to the "OFF" position.	Set point knob was recently turned to "OFF" position. Wait until LED goes out before attempting to relight.
Two flashes and three second pause.	Weak pilot flame detected. System will reset when pilot flame is sufficient.	1. Unstable pilot. 2. Pilot tube blocked or restricted.
Three flashes and three second pause.	Insufficient water heating. System will reset.	1. Temperature sensor out of calibration. 2. Possible short.
Four flashes and three second pause.	Excessive tank temperature. System must be reset.	1. Temperature sensor out of calibration. 2. Faulty gas valve.
Five flashes and three second pause.	Temperature Sensor fault.	1. Damage to the temperature wire. 2. Temperature sensor resistance out of range. 3. Replace temperature sensor. 4. If temperature sensor replacement does not correct the problem; verify control is not wet or physically damaged. 5. Turn set point knob to "OFF" position. Turn set point knob to "PILOT" position and light pilot. 6. Replace gas valve if five flash error persists.

TROUBLESHOOTING CHART (CONTINUED)

LED Status	Control Status	Probable Cause
Six flashes and three second pause.	Water leak detected by accessory module (some models).	Excessive amount of water in drain pan/water dam.
Seven flashes and three second pause.	Gas valve electronic fault detected.	1. Verify control is not wet or physically damaged. 2. Turn set point knob to "OFF" position. Turn set point knob to "PILOT" position and light pilot. 3. Replace gas valve if seven flash error persists.
Eight flashes and three second pause.	False pilot flame present.	1. Pilot valve stuck in open position. 2. Turn set point knob to "OFF" position. Turn set point knob to "PILOT" position and light pilot. 3. Replace gas valve if eight flash error persists.

THE FOLLOWING INSTRUCTIONS ARE FOR INSTALLATION OF: GAS WATER HEATERS SUITABLE FOR WATER (POTABLE) HEATING AND SPACE HEATING

1. All piping components connected to this water heater for space heating applications must be suitable for use with potable water. In Massachusetts, space heating piping length **must not** exceed 50 feet.
2. Toxic chemicals, such as those used for boiler treatment, **must not** be introduced into potable water used for space heating.
3. This water heater **must not** be connected to an existing heating system or component(s) previously used with a non-potable water heating appliance.
4. When the system requires water for space heating at temperatures higher than required for other uses, a means such as an ASSE approved mixing valve shall be installed to temper the water for those uses in order to reduce scald hazard potential.

Please refer to the illustrations below for the suggested piping arrangement.

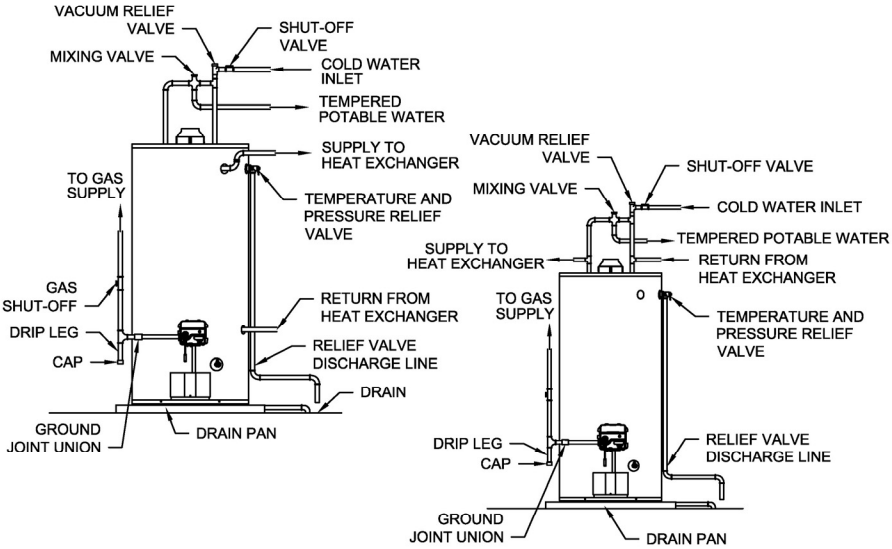

NOTES

NOTES