SPECIFICATIONS

SIRIUS™ SINGLE HANDLE KITCHEN FAUCET

Model

D401544LF

Description

- Ceramic disc valve
- 13 ½" high spout, 9" spout length
- 2 hole mount
- 1.5gpm (5.7L/min) maximum flow rate @60 psi

Standards

GREEN UPC NSF/ANSI 372 Water Efficiency

- NSF/ANSI 372

MEETS ASME A112.18.1M/A112.18.1

- ASME A112.18.1M/A112.18.1

- ADA Accessibility Guidelines for Buildings and Facilities - 309.4 Operation for Operable Parts

Warranty

Danze products are covered by a manufacturer's limited "lifetime" warranty for manufacturing defects.

Flow Rate

Finishes Available

- Chrome
- Other: Refer to Price List for additional finish

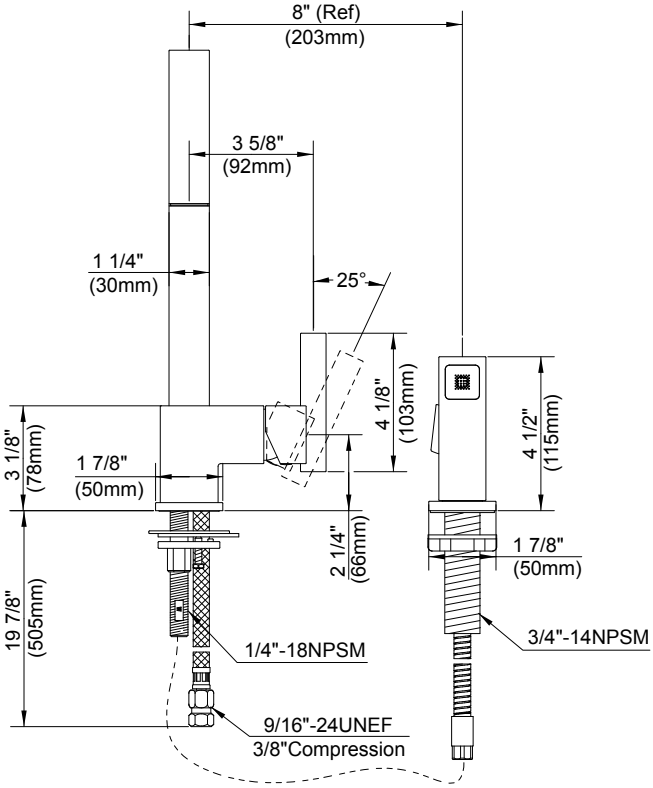

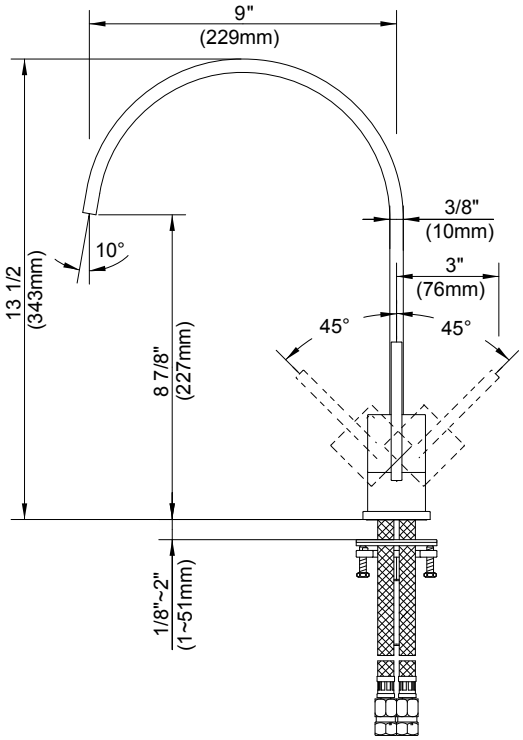

Submittal Information:

Job Name: _____ *Location:* _____

Contractor: _____ *Contact #:* _____