danze

# SPECIFICATIONS

## PLYMOUTH™ BATH ACCESSORY COLLECTION

### Description

- Sleek modern design
- Matches Plymouth™ collection
- Mounting hardware provided
- All brass construction

### Warranty

Danze Bath Accessories are covered by a manufacturer's limited "lifetime" warranty on finish and manufacturing defects.

### Available Finishes

- Chrome
- Brushed Nickel (BN)

D441412 - 18" Towel Bar
D441422 - 24" Towel Bar

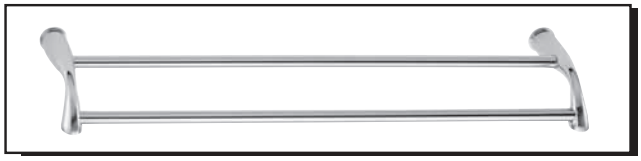

D441612 - 24" Double Towel Bar

D441162 - Robe Hook

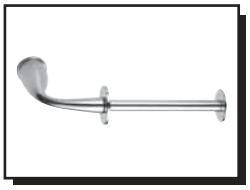

D441251 - Toilet Paper Holder

D441112 - Towel Ring

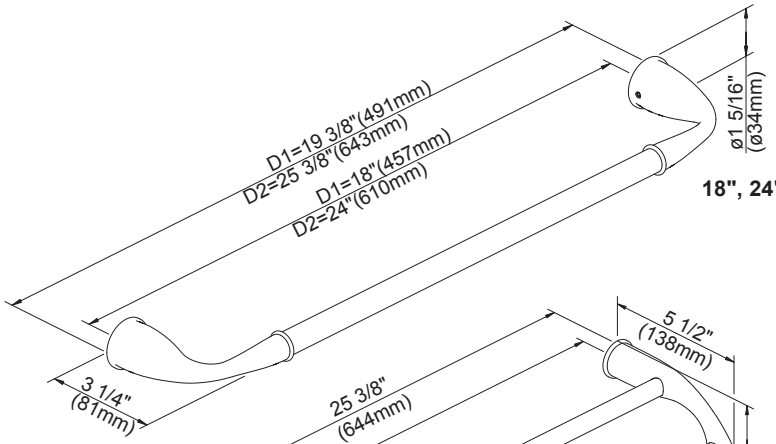


**18", 24" - Towel Bar**

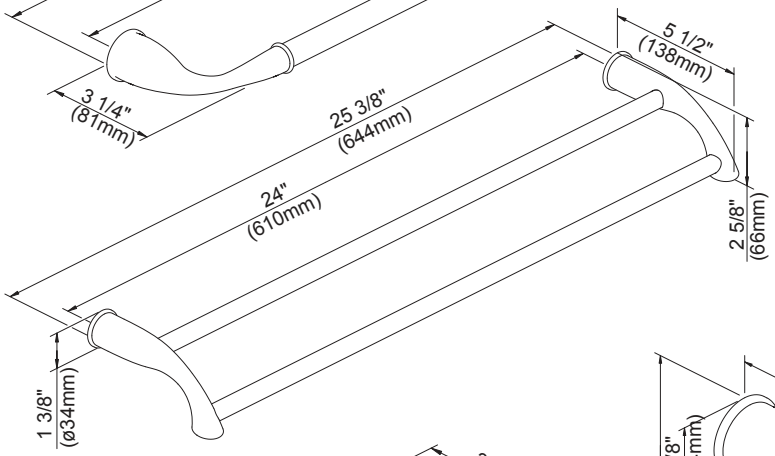


**24" - DoubleTowel Bar**

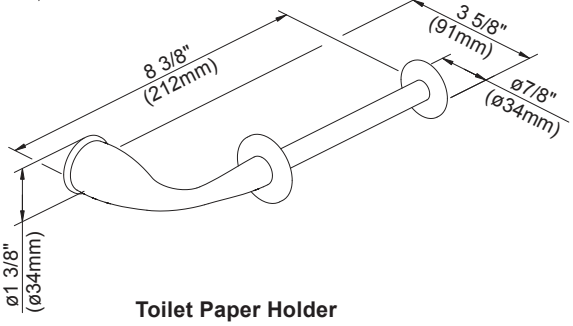


**Toilet Paper Holder**

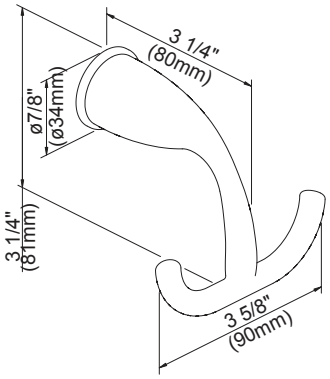


**Robe Hook**

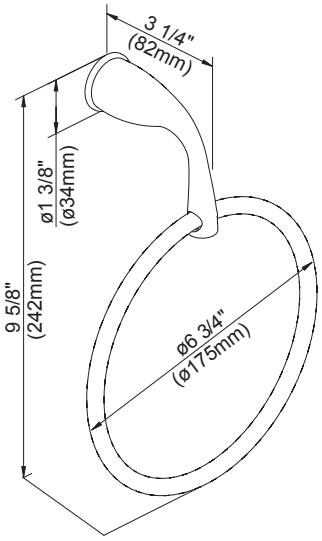


**Towel Ring**

Submittal Information:

*Job Name:* _____ *Location:* _____

*Contractor:* _____ *Contact #:* _____