Folsom series - PFB54

Enameled Steel Soaking Tub 54"x30"

Product Features

- Enameled steel bathtub
- 54" x 30" x 15-1/4"
- Fully bounded support pad
- Full length tile flange with continuous corners for watertight integrity
- Standard rough-in
- High gloss, stain resistant porcelain finish
- Non-skid bottom
- One-piece construction
- Designed for space-saving convenience
- Weight: 70lbs

PFB54

Available Colors

- White
- Biscuit
- Bone

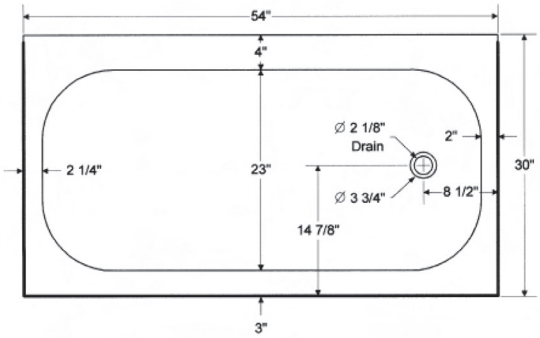

Model Numbers

PFB54R 54" x 30" x 15-1/4"
Bathtub RH, non-skid

PFB54L 54" x 30" x 15-1/4"
Bathtub LH, non-skid

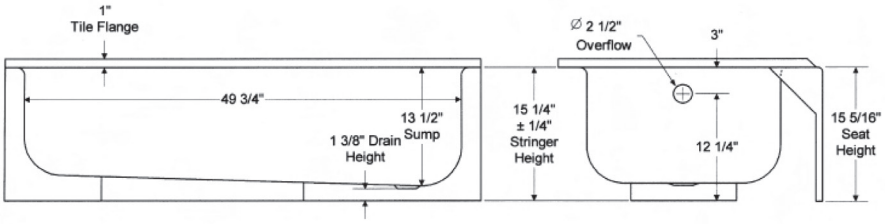

Warranty and Codes

This product comes complete with installation, operating, care and maintenance instructions. All PROFLO fixtures carry a 1-year limited warranty. In an effort to continually improve our products, we will make design changes form time to time. We reserve the right to ship newly designed product to fill any order unless we agree in writing to do otherwise.

Distributed Exclusively by Ferguson and Wolseley Canada

© 2017 Ferguson Enterprises, Inc.

586278 09/17