PFWSC8860
ORRS Series Two Handle Widespread Faucet

Product Features

- Ceramic disc cartridges
- Metal lever handles
- Requires 3-hole sink with 8” on-center
- With brass pop-up
- 100% factory pressure tested
- Max. flow rate: 1.2 gpm (4.5 L/min) at 60 psi
- EPA WaterSense approved
- NSF-61 compliant
- ADA compliant

PFWSC8860

Model Numbers

PFWSC8860CP	Chrome
PFWSC8860BN	Brushed nickel

Product Specifications

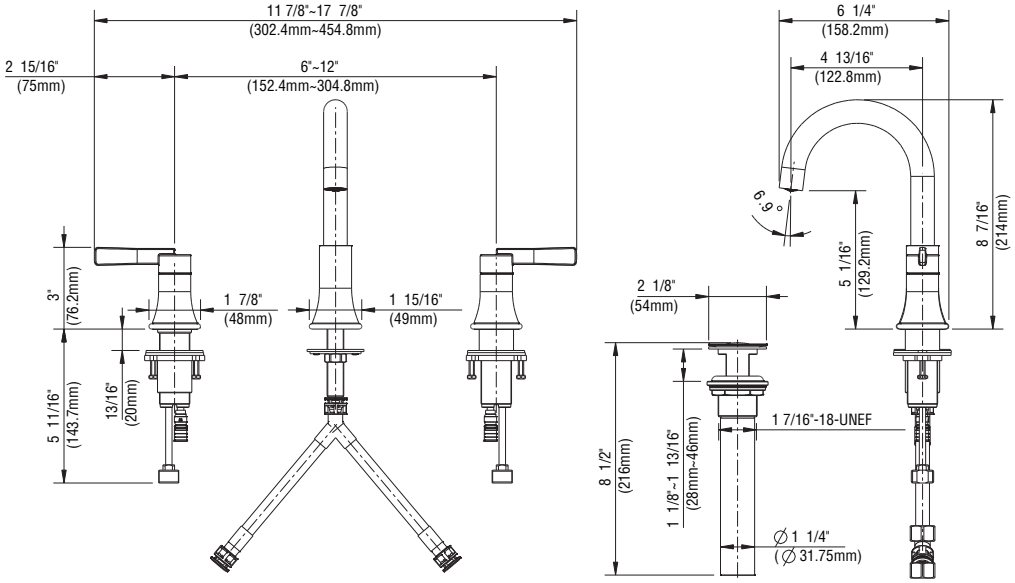

Warranty and Codes

This product comes complete with installation, operating, care and maintenance instructions.
This PROFLO faucet carries a limited lifetime warranty when installed in residential applications.
The warranty is five years in commercial applications.
*Compliant with lead content requirements of California AB 1953.

Distributed Exclusively by Ferguson and Wolseley Canada

© 2018 Ferguson Enterprises, Inc.

342876 02/18