Series MI/MIH II™

Gas Boilers

Installation, Operation & Maintenance Manual

PeerlessBoilers.com

TABLE OF CONTENTS

USING THIS MANUAL 1
A. INSTALLATION SEQUENCE 1
B. SPECIAL ATTENTION BOXES 1

1. PREINSTALLATION 2
A. ACCESSIBILITY CLEARANCES 2
B. CLEARANCE FROM COMBUSTIBLE CONSTRUCTION 2
C. AIR FOR COMBUSTION AND VENTILATION 3
D. INSTALLATION SURVEY 6
E. PLANNING THE LAYOUT 6
F. WATER TREATMENT 6

2. BOILER SET-UP 7

3. WATER PIPING AND CONTROLS 8
A. BOILER SUPPLY AND RETURN 8
B. SAFETY RELIEF VALVE 9
C. PIPING FOR ZONED SYSTEMS 10
D. EXPANSION TANK 11
E. INDIRECT-FIRED WATER HEATER 11
F. FREEZE PROTECTION 11

4. VENTING 12
A. INTEGRAL DRAFT HOOD 12
B. VENT DAMPER INSTALLATION – GENERAL 12
C. VENT PIPING AND CHIMNEY 13
D. BOILER REMOVAL FROM COMMON VENTING SYSTEM 14

5. GAS PIPING 15

6. ELECTRICAL 17
A. WIRING 17
B. ZONED SYSTEM WIRING 17
C. CONTROLS 17
D. SEQUENCE OF OPERATION 20

7. START-UP PROCEDURES 21
A. COMPLETING THE INSTALLATION 21
B. CONTROL DESCRIPTIONS 24
C. ADJUSTMENT OF GAS PRESSURE REGULATOR 24
D. CHECKING BURNER INPUT 24
E. CHECK-OUT PROCEDURE 25

8. TROUBLESHOOTING 26
A. SHUT-DOWN CAUSED BY PILOT OUTAGE, BLOCKED VENT SHUT-OFF SWITCH OR FLAME ROLL-OUT SAFETY SHUT-OFF SWITCH 26
B. TROUBLESHOOTING GUIDES 26

9. MAINTENANCE 29
A. GENERAL 30
B. DAILY (WITH BOILER IN USE) 30
C. WEEKLY (WITH BOILER IN USE) 30
D. MONTHLY (WITH BOILER IN USE) 30
E. ANNUALLY (BEFORE START OF HEATING SEASON) 30

10. BOILER DIMENSIONS & RATINGS 32

11. REPAIR PARTS 33
A. BASE/COMBUSTIBLE FLOOR PAN 33
B. MANIFOLD, GAS VALVE & PILOT 34
C. BLOCK/DRAFT HOOD & JACKET 36
D. CONTROLS/CIRCULATOR/VENT & DAMPER 38

USING THIS MANUAL

A. INSTALLATION SEQUENCE

Follow the installation instructions provided in this manual in the order shown. The order of these instructions has been set in order to provide the installer with a logical sequence of steps that will minimize potential interferences and maximize safety during boiler installation.

B. SPECIAL ATTENTION BOXES

Throughout this manual you will see special attention boxes intended to supplement the instructions and make special notice of potential hazards. These categories mean, in the judgment of PB Heat, LLC.:

⚠ DANGER

Indicates a condition or hazard which will cause severe personal injury, death or major property damage.

⚠ WARNING

Indicates a condition or hazard which may cause severe personal injury, death or major property damage.

⚠ CAUTION

Indicates a condition or hazard which will or can cause minor personal injury or property damage.

⚠ NOTICE

Indicates special attention is needed, but not directly related to potential personal injury or property damage.

1. PREINSTALLATION

Read carefully, study these instructions before beginning work.

This boiler must be installed by a qualified contractor.

The boiler warranty can be voided if the boiler is not installed, maintained and serviced correctly.

⚠ NOTICE

The equipment must be installed in accordance with those installation requirements of the authority having jurisdiction or, in the absence of such requirements, to the current edition of the *National Fuel Gas Code*, ANSI Z223.1/NFPA 54 and/or CAN/CSA B149.1, *Natural Gas and Propane Installation Code*.

Where required by the authority having jurisdiction, the installation must conform to *American Society of Mechanical Engineers Safety Code for Controls and Safety Devices for Automatically Fired Boilers,* ASME CSD-1.

⚠ IMPORTANT

In accordance with Section 325 (f) (3) of the Energy Policy and Conservation Act, this boiler is equipped with a feature that saves energy by reducing the boiler water temperature as the heating load decreases. This feature is equipped with an override which is provided primarily to permit the use of an external energy management system that serves the same function.

THIS OVERRIDE MUST NOT BE USED UNLESS AT LEAST ONE OF THE FOLLOWING CONDITIONS IS TRUE:

- **An external energy management system is installed that reduces the boiler water temperature as the heating load decreases.**
- **This boiler is not used for any space heating**
- **This boiler is part of a modular or multiple boiler system having a total input of 300,000 BTU/hr or greater.**
- **This boiler is equipped with a tankless coil.**

A. ACCESSIBILITY CLEARANCES

Install boiler not less than 24″ (610 mm) between the left side, top, and front of the boiler and adjacent wall or other appliance, when access is required for servicing.

B. CLEARANCE FROM COMBUSTIBLE CONSTRUCTION

The design of this boiler is certified for alcove installation with the following clearances:

1. 6″ (152 mm) between sides and combustible construction.
2. 24″ (610 mm) between top of jacket and combustible construction.
3. 6″ (152 mm) between draft hood and combustible construction.
4. 6″ (152 mm) between vent pipe and combustible construction.
5. 10″ (254 mm) between rear of jacket and combustible construction.

⚠ WARNING

Do not install this boiler on combustible flooring unless it is installed on a special combustible floor pan provided by PB Heat, LLC. Boiler installation on combustible flooring without the special pan is a fire hazard.

To order combustible floor pan, use the 5-digit stock codes listed in Table 11.1 of this manual.

⚠ WARNING

Do not install this boiler on carpeting. Boiler installation on carpeting is a fire hazard. Install this boiler on non-combustible flooring or use a combustible floor pan to install this boiler on other non-carpeted flooring.

C. AIR FOR COMBUSTION AND VENTILATION

1. Adequate combustion air and ventilation air must be provided for this appliance in accordance with the section of the *National Fuel Gas Code* entitled, "Air for Combustion and Ventilation" or applicable provisions of the local building code. Subsections 2 through 8 as follows are based on the *National Fuel Gas Code* requirements.

2. Required Combustion Air Volume: The total required volume of indoor air is to be the sum of the required volumes for all appliances located within the space. Rooms communicating directly with the space in which the appliances are installed and through combustion air openings sized as indicated in Subsection 3 are considered part of the required volume. The required volume of indoor air is to be determined by one of two methods.

   a. ***Standard Method:*** The minimum required volume of indoor air (room volume) shall be 50 cubic feet per 1000 BTU/Hr (4.8 m^3/kW). This method is to be used if the air infiltration rate is unknown or if the rate of air infiltration is known to be greater than 0.6 air changes per hour. As an option, this method may be used if the air infiltration rate is known to be between 0.6 and 0.4 air changes per hour. If the air infiltration rate is known to be below 0.4 then the *Known Air Infiltration Rate Method* must be used. If the building in which this appliance is to be installed is unusually tight, PB Heat recommends that the air infiltration rate be determined.

   b. ***Known Air Infiltration Rate Method:*** Where the air infiltration rate of a structure is known, the minimum required volume of indoor air for appliances other than fan assisted and for the Series MI™ Boiler shall be determined as follows:

$$\text{Required Volume}_{other} = \frac{21\ \text{ft}^3}{\text{ACH}} \left(\frac{I_{other}}{1000\,\text{Btu/hr}} \right)$$

   where:
   I_{other} = Input of appliances other than fan assisted in Btu/hr
   ACH = air change per hour (percent of the volume of the space exchanged per hour, expressed as a decimal)

   For fan assisted appliances, calculate the required volume of air using the following equation:

$$\text{Required Volume}_{fan} = \frac{15\ \text{ft}^3}{\text{ACH}} \left(\frac{I_{fan}}{1000\,\text{Btu/hr}} \right)$$

   I_{fan} = Input of the fan assisted appliances in Btu/hr

   Note: These calculations are not to be used for infiltration rates greater than 0.60 ACH.

3. Indoor Air Opening Size and Location: Openings connecting indoor spaces shall be sized and located as follows:

   a. **Combining spaces on the same floor:** Provide two permanent openings communicating with additional spaces that have a minimum free area of 1 in^2 per 1000 Btu/hr (22 cm^2 per 1000 W) of the total input rating of all gas fired equipment but not less than 100 in^2 (645 cm^2). One opening is to begin within 12 inches (305 mm) from the top of the space and the other is to begin within 12 inches (305 mm) from the floor. The minimum dimension of either of these openings shall be 3 inches (76 mm). See Figure 1.1 for an illustration of this arrangement.

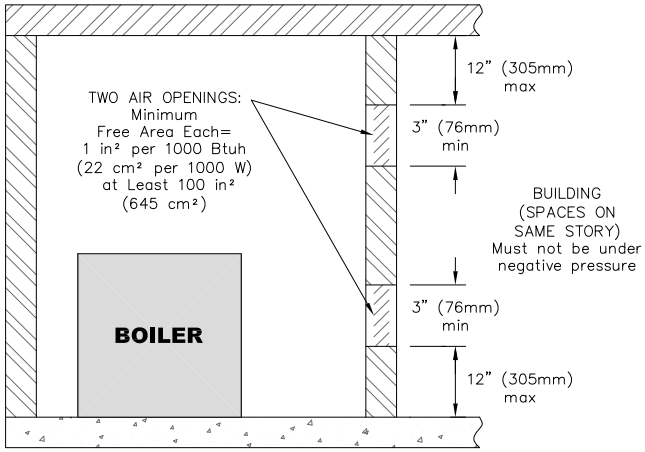

Figure 1.1: Air Openings – All Air from Indoors on the Same Floor

   b. **Combining spaces on different floors:** Provide one or more permanent openings communicating with additional spaces that have a total minimum free area of 2 in^2 per 1000 Btu/hr (44 cm^2 per 1000 W) of total input rating of all equipment. See Figure 1.2 for an illustration of this arrangement.

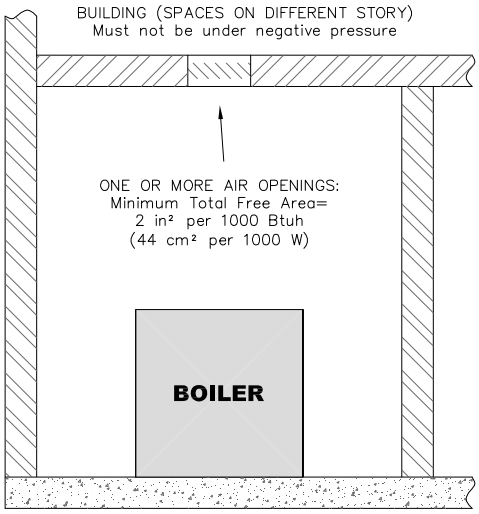

Figure 1.2: Air Openings – All Air from Indoors on Different Floors

4. Outdoor Combustion Air: Outdoor combustion air is to be provided through one or two permanent openings. The minimum dimension of these air openings is 3 inches (76 mm).
   a. **Two Permanent Opening Method:** Provide two permanent openings. One opening is to begin within 12 inches (305 mm) of the top of the space and the other is to begin within 12 inches (305 mm) of the floor. The openings are to communicate directly or by ducts with the outdoors or with spaces that freely communicate with the outdoors. The size of the openings shall be determined as follows:
      i. Where communicating directly or through vertical ducts with the outdoors each opening shall have a minimum free area of 1 in^2 per 4000 Btu/hr (22 cm^2 per 4000 W) of total input rating for all equipment in the space. See Figure 1.3 for openings directly communicating with the outdoors or Figure 1.4 for openings connected by ducts to the outdoors.

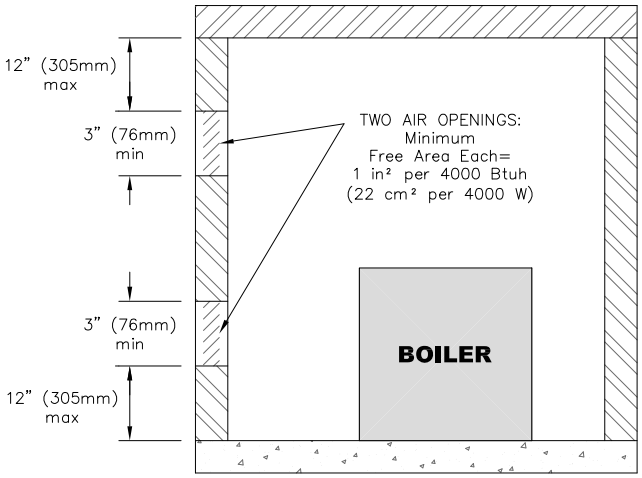

Figure 1.3: Air Openings – All Air Directly from Outdoors

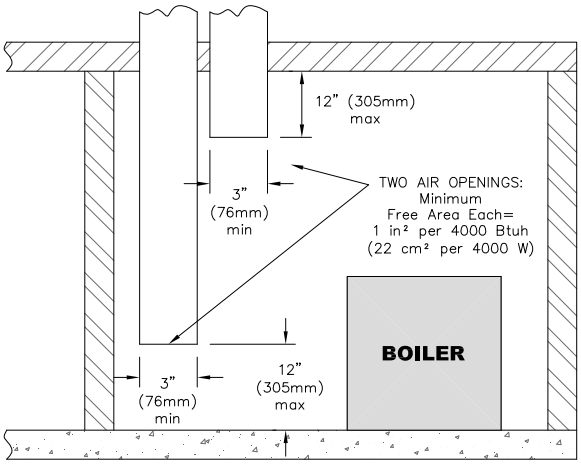

Figure 1.4: Air Openings – All Air from Outdoors through Vertical Ducts

      ii. Where communicating with the outdoors through horizontal ducts, each opening shall have a minimum free area of 1 in^2 per 2000 Btu/hr (22 cm^2 per 2000 W) of total rated input for all appliances in the space. See Figure 1.5.

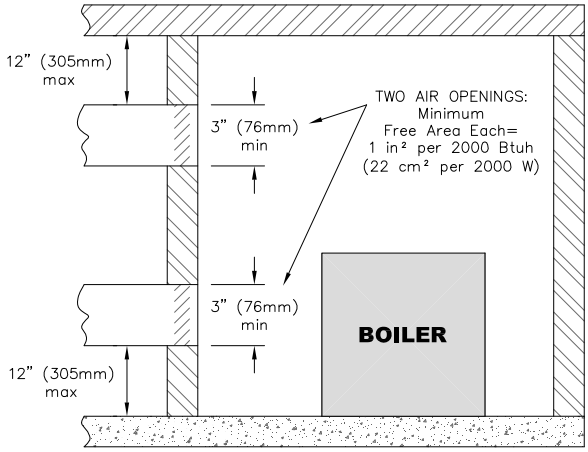

Figure 1.5: Air Openings – All Air from Outdoors through Horizontal Ducts

   b. **One Permanent Opening Method:** Provide one permanent opening beginning within 12 inches (305 mm) of the top of the space. The opening shall communicate directly with the outdoors, communicate through a vertical or horizontal duct, or communicate with a space that freely communicates with the outdoors. The opening shall have a minimum free area of 1 in^2 per 3000 Btu/hr of total rated input for all appliances in the space and not less than the sum of the cross-sectional areas of all vent connectors in the space. The gas-fired equipment shall have clearances of at least 1 inch (25 mm) from the sides and back and 6 inches (150 mm) from the front of the appliance. See Figure 1.6 for this arrangement.

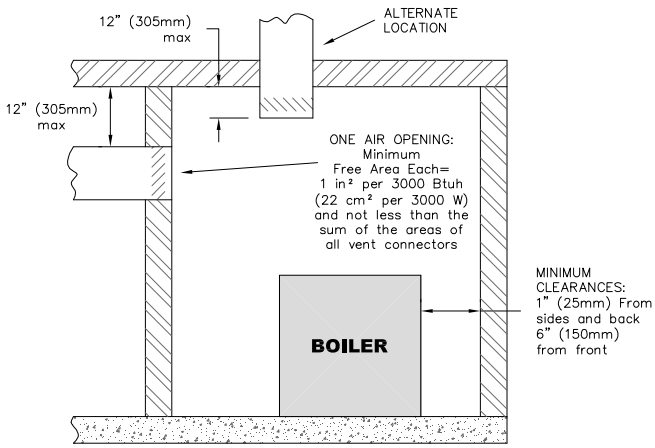

Figure 1.6: Air Openings – All Air from Outdoors through One Opening

5. Combination Indoor and Outdoor Combustion Air: If the required volume of indoor air exceeds the available indoor air volume, outdoor air openings or ducts may be used to supplement the available indoor air provided:
   a. The size and location of the indoor openings comply with Subsection 3.
   b. The outdoor openings are to be located in accordance with Subsection 4.
   c. The size of the outdoor openings are to be sized as follows:

$$A_{req} = A_{full} \times \left(1 - \frac{V_{avail}}{V_{req}}\right)$$

where:
A_{req} = minimum area of outdoor openings.
A_{full} = full size of outdoor openings calculated in accordance with Subsection 4.
V_{avail} = available indoor air volume
V_{req} = required indoor air volume

6. Engineered Installations: Engineered combustion air installations shall provide an adequate supply of combustion, ventilation, and dilution air and shall be approved by the authority having jurisdiction.

7. Mechanical Combustion Air Supply:
   a. In installations where all combustion air is provided by a mechanical air supply system, the combustion air shall be supplied from the outdoors at the minimum rate of 0.35 ft^3/min per 1000 Btu/hr (0.034 m^3/min per 1000 W) of the total rated input of all appliances in the space.
   b. In installations where exhaust fans are installed, additional air shall be provided to replace the exhaust air.
   c. Each of the appliances served shall be interlocked to the mechanical air supply to prevent main burner operation when the mechanical air supply system is not in operation.
   d. In buildings where the combustion air is provided by the mechanical ventilation system, the system shall provide the specified combustion air rate in addition to the required ventilation air.

8. Louvers & Grills:
   a. The required size of openings for combustion, ventilation, and dilution air shall be based on the net free area of each opening.
      i. Where the free area through a louver or grille is known, it shall be used in calculating the opening size required to provide the free area specified.
      ii. Where the free area through a louver or grille is not known, it shall be assumed that wooden louvers will have 25% free area and metal louvers and grilles will have 75% free area.
      iii. Nonmotorized dampers shall be fixed in the open position.
   b. Motorized dampers shall be interlocked with the equipment so that they are proven in the full open position prior to ignition and during operation of the main burner.
      i. The interlock shall prevent the main burner from igniting if the damper fails to open during burner startup.
      ii. The interlock shall shut down the burner if the damper closes during burner operation.

9. Combustion Air Ducts
   a. Ducts shall be constructed of galvanized steel or an equivalent corrosion- resistant material.
   b. Ducts shall terminate in an unobstructed space, allowing free movement of combustion air to the appliances.
   c. Ducts shall serve a single space.
   d. Ducts shall not serve both upper and lower combustion air openings where both such openings are used. The separation between ducts serving upper and lower combustion air openings shall be maintained to the source of combustion air.
   e. Ducts shall not be screened where terminating in an attic space.
   f. Horizontal upper combustion air ducts shall not slope downward toward the source of the combustion air.
   g. The remaining space surrounding a chimney liner, gas vent, special gas vent, or plastic piping installed within a masonry, metal, or factory built chimney shall not be used to supply combustion air.
   h. Combustion air intake openings located on the exterior of buildings shall have the lowest side of the combustion air intake opening at least 12 inches (305 mm) above grade.

⚠ WARNING

Liquefied Petroleum (LP) is heavier than air and may collect or "pool" in a low area in the event of a leak from defective equipment. This gas may then ignite, resulting in a fire or explosion.

D. INSTALLATION SURVEY

For new and existing installations, a Water Installation Survey is available from PB Heat, LLC. The survey will provide information on how a hot water boiler works with your specific system and will provide an overview of hot water system operation in general.

You can also use this survey to locate system problems which will have to be corrected. To obtain copies of the Water Installation Survey, contact your PB Heat representative or download it from PeerlessBoilers.com.

E. PLANNING THE LAYOUT

Prepare sketches and notes of the layout to minimize the possibility of interferences with new or existing equipment, piping, venting and wiring.

F. BOILER WATER TREATMENT

If the boiler water quality is outside the criteria shown below, consult a qualified water treatment specialist to bring the water quality within the criteria shown.

Water Quality Criteria:

1. Boiler water pH should be in 7.5 to 11 range.
2. Boiler water chloride concentration should be less than 30 ppm.

2. BOILER SET-UP

1. Provide a sound, level foundation. Locate boiler as near to the chimney or outside wall as possible and centralized with respect to the heating system.
2. Locate boiler in front of installation position before removing crate.
3. If using combustible floor pan, position pan on foundation or flooring.
4. Separate the wood shipping pallet from the boiler base by removing two (2) hold-down bolts at each end of the boiler base.
5. Move boiler into final position. If using combustible floor pan, install boiler on pan as outlined in the instructions included with the pan.

3. WATER PIPING AND CONTROLS

A. BOILER SUPPLY AND RETURN

1. Size the supply and return to suit the system. A typical piping arrangement is shown in Figure 3.1. Refer also to the I=B=R Guide - Residential Hydronic Heating Installation/Design and the PB Heat Water Survey for additional guidance during water piping installation.

2. Return Piping:
   Pipe the drain valve to a tee, provided, and the 1-1/4 NPT return tapping near the bottom of the left section. Pipe the return to the tee. Pipe the drain valve nipples and tee to the 1-1/4 NPT return tapping as shown in Figure 3.1.

3. Supply Piping:
   Pipe the supply to the 1-1/2 NPT supply tapping at the top and rear of the boiler.

4. When system return water temperature will be below 130°F (54°C), pipe the boiler with a bypass arrangement to blend the system return and hot supply to obtain at least 130°F (54°C) entering the boiler. For more information on bypass piping, consult the PB Heat Water Survey.

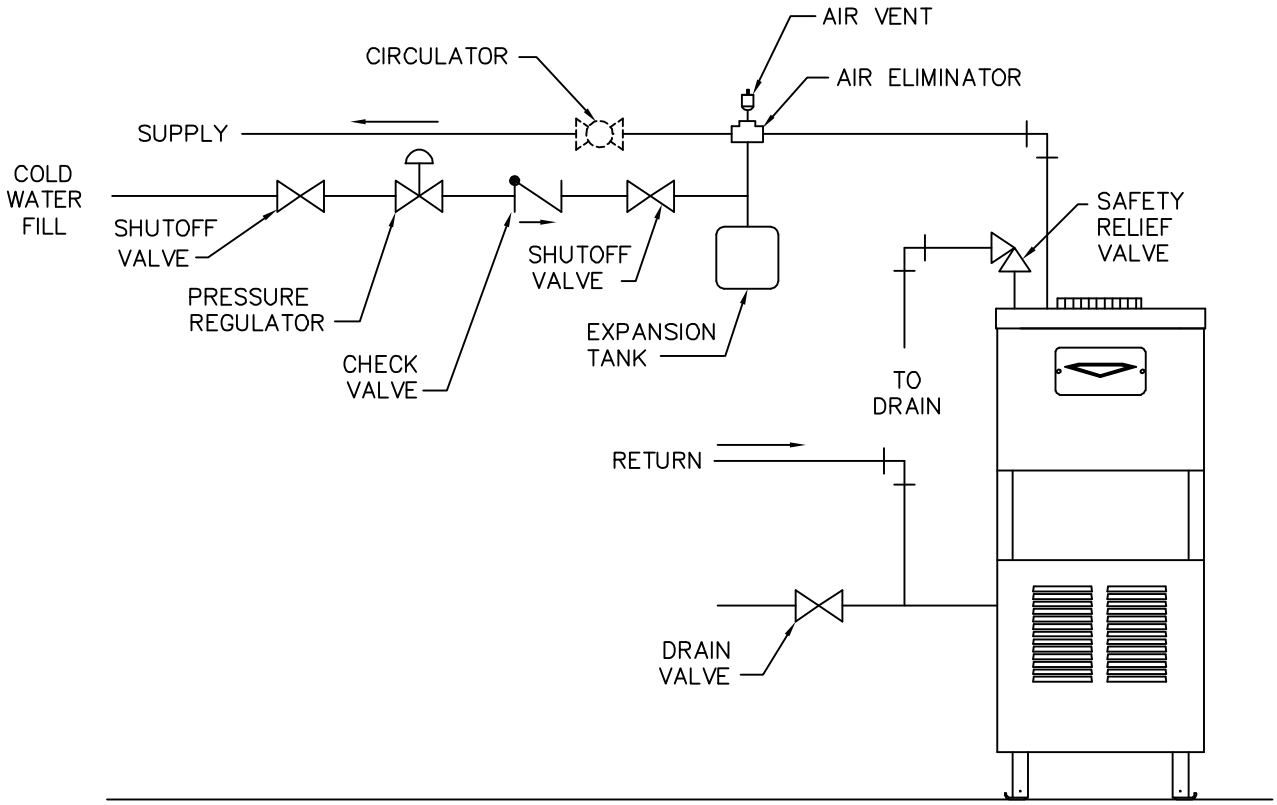

Figure 3.1: Supply and Return Piping

5. Install this boiler so that the gas ignition system components are protected from water (dripping, spraying, etc.) during appliance operation and service (circulator replacement, condensate trap, control replacements, etc.).

6. If this boiler and distribution system is used in conjunction with a refrigeration system, pipe the chilled medium in parallel with the boiler and install the proper valve to prevent the chilled medium from entering the boiler. A drawing illustrating this hook-up is provided in Figure 3.2.

7. When the boiler is connected to heating coils located in air handling units where they may be exposed to refrigerated air circulation, install flow control valves or other automatic means to prevent gravity circulation of the boiler water during the cooling cycle.

8. If this boiler is installed above radiation level, provide a low water cutoff device, either as a part of the boiler or at the time of boiler installation.

B. SAFETY RELIEF VALVE

1. Locate safety relief valve and fittings in bag assembly.
2. If air elimination is not required at the safety relief valve tapping, install valve and piping as shown in Figure 3.3.
3. For air elimination at the safety relief valve tapping, install valve and piping as shown in Figure 3.4.

⚠ CAUTION

Pipe the discharge of safety relief valve to prevent injury in the event of pressure relief. Pipe the discharge to a drain. Provide piping that is the same size as the safety relief valve outlet.

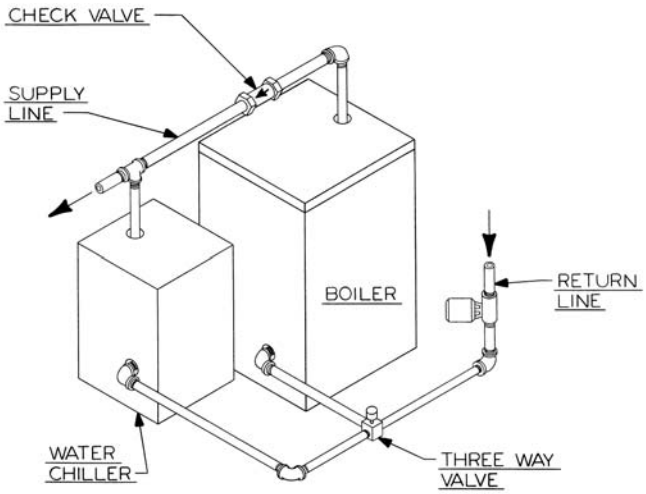

Figure 3.2: Parallel Hook-Up with Water Chiller

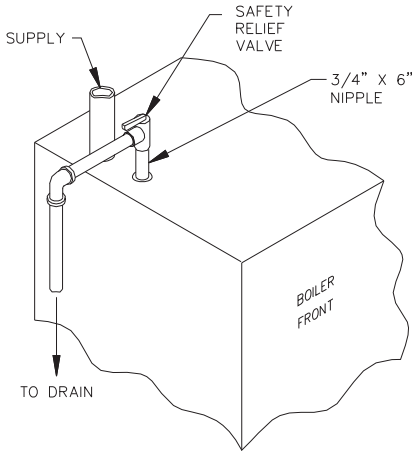

Figure 3.3: Safety Relief Valve Hook-Up Installation with Air Elimination in System Piping

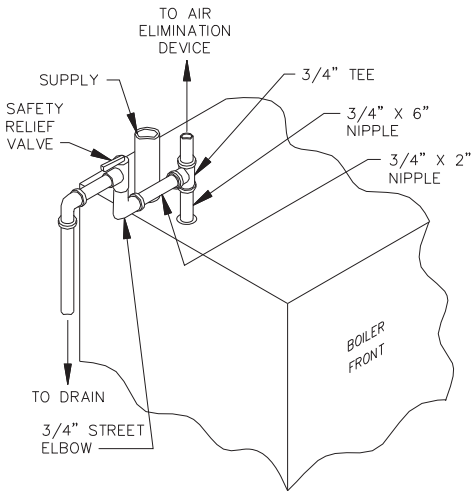

Figure 3.4: Safety Relief Valve Hook-Up with Air Elimination

C. PIPING FOR ZONED SYSTEMS

1. See Figures 3.5 and 3.6 for basic zoned system layouts.
2. Run each zone pipe down then up to zone to prevent air accumulation in piping.
3. If required, provide means to isolate and drain each zone separately.

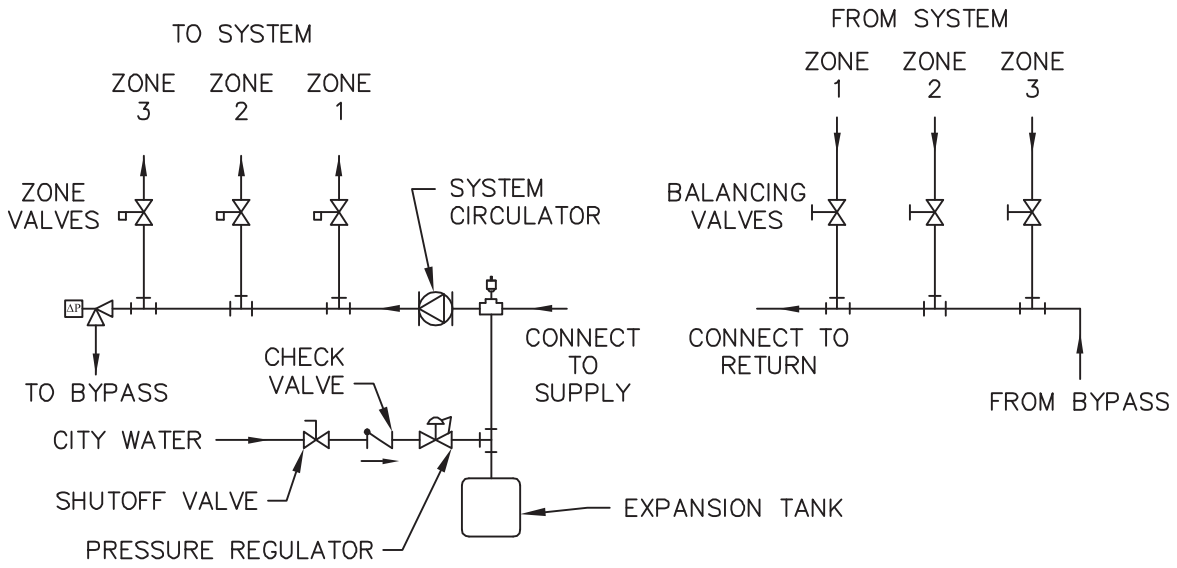

Figure 3.5: Zone Piping with Zone Valves

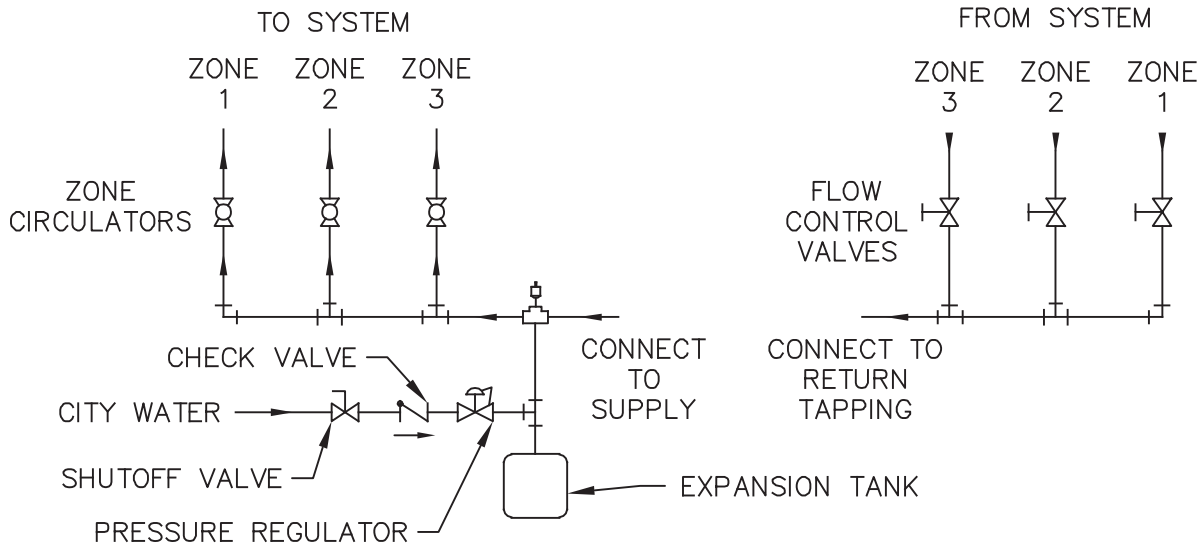

Figure 3.6: Zone Piping with Circulators

D. EXPANSION TANK

1. Consult the tank manufacturer's instructions for specific information relating to tank installation. Size the expansion tank for the required system volume and capacity. See Table 10.2 in Section 10 for boiler water content.

2. Expansion tanks are available with built-in fill valves and check valves for reducing supply water pressure and maintaining minimum system pressure. Check the design features of the tank and provide valves as necessary. Refer back to Figure 3.1 for typical expansion tank piping.

E. INDIRECT-FIRED WATER HEATER

If the boiler is to be used in conjunction with an indirect-fired water heater, refer to Figure 3.7 for typical piping. Follow the instructions provided by the water heater manufacturer. Pipe the water heater as a separate zone.

F. FREEZE PROTECTION

For new or existing systems that must be freeze-protected:

⚠ WARNING

Use only inhibited propylene glycol solutions of up to 50% by volume with water. Ethylene glycol is toxic and can attack gaskets and seals used in hydronic systems.

1. Glycol in hydronic applications is specially formulated for this purpose. It includes inhibitors which prevent the glycol from attacking metallic system components. Make certain that the system fluid is checked for the correct glycol concentration and inhibitor level.

2. The glycol solution should be tested at least once a year and as recommended by the glycol manufacturer.

3. Glycol solutions expand more than water. For example, a 50% by volume solution expands 4.8% in volume for a temperature increase from 32°F (0°C) to 180°F (82°C), while water expands 3% with the same temperature rise. Allowance must be made for this expansion in system design.

4. For more information, consult the PB Heat Water Installation Survey and the glycol manufacturer.

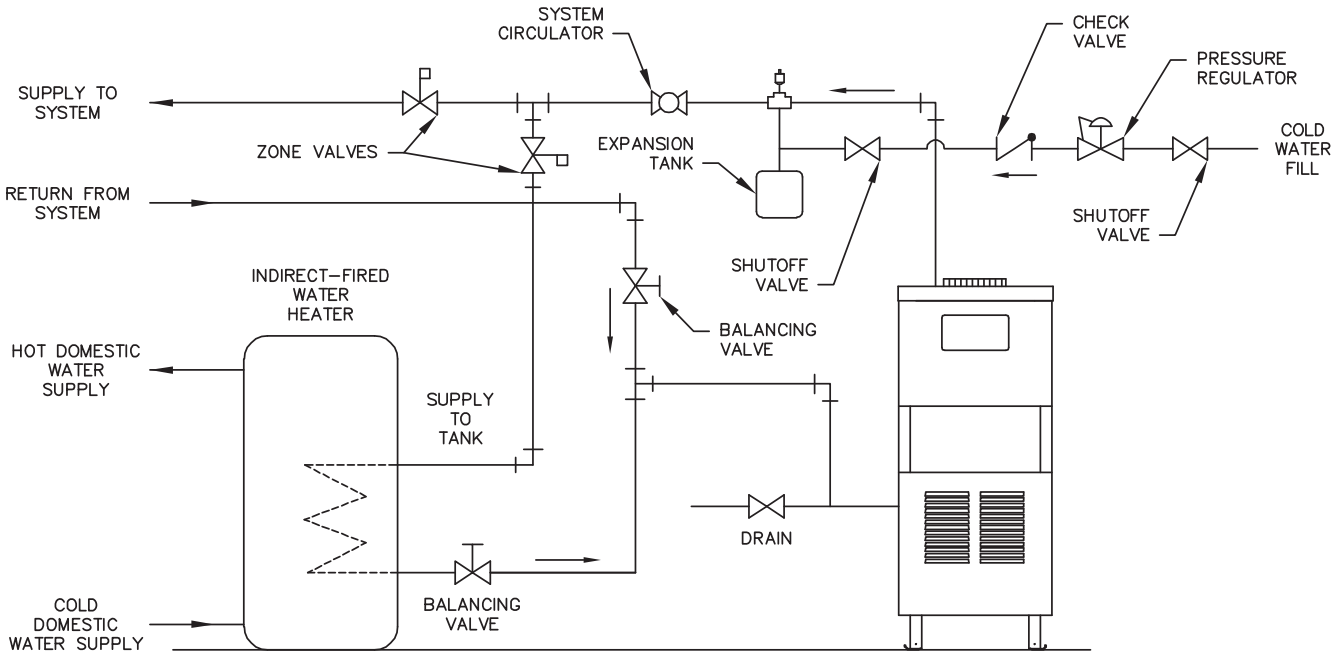

Figure 3.7: Typical Piping with Indirect-Fired Water Heater

4. VENTING

A. INTEGRAL DRAFT HOOD

1. The MI/MIHII™ boiler is equipped with a built-in draft hood. This device is designed to:
   a. provide for the ready escape of flue gases from the boiler in the event of no draft.
   b. prevent a backdraft from entering the boiler.
   c. control stack draft during operation.

   These tasks are accomplished without the extra height requirements of a separate draft hood.
2. The draft hood relief opening is the large rectangular passage at the front of the boiler. Make certain that there are no obstructions to airflow in front of this opening.
3. A vent safety shut-off switch is located within the draft relief opening to shut off the boiler in case of a blocked vent condition. See Section 7B for details regarding this device. See Figure 6.1 in Section 6 (Electrical) for spill switch location.
4. The vent damper can be mounted directly onto the round draft hood outlet (vent connector) on top of the boiler, or in vent piping close to the boiler. See the Vent Damper Installation Instructions below.

B. VENT DAMPER INSTALLATION – GENERAL

1. Do not use one vent damper to control two or more heating appliances. See Figure 4.1.
2. Follow these and the installation instructions that are included with the vent damper. Observe the cautions and warnings that accompany all instructions.
3. Make certain that minimum clearances provided in the vent damper manufacturer's instructions are maintained and that adequate space is available for damper access and service.
4. Orient the damper operator to facilitate connection of the harness with the vent damper and boiler. Note flue gas flow arrow on vent damper and orient as required. For installation with damper mounted in vertical position, see Figure 4.2. For installation with damper mounted in horizontal position, mount the unit as shown in Figure 4.3 to avoid excessive heat on the operator or condensation drips into the operator.

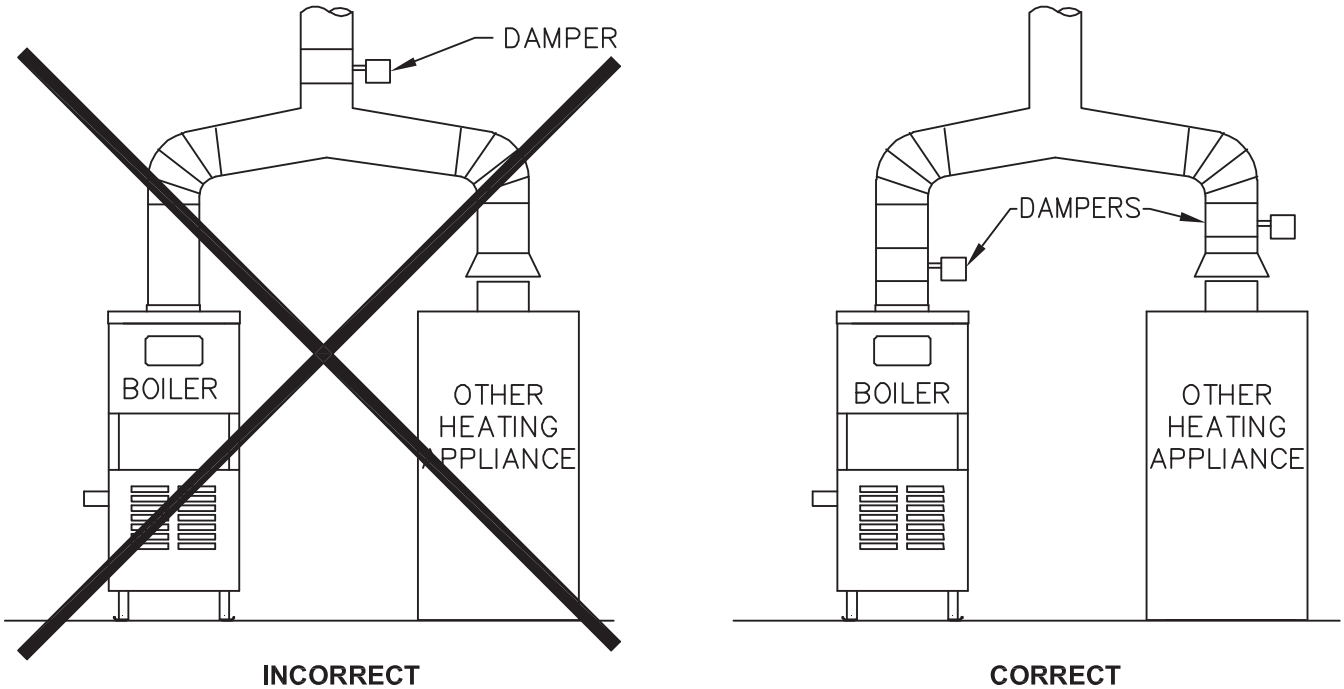

Figure 4.1: Venting Multiple Appliances

C. VENT PIPING AND CHIMNEY

1. Install vent piping in accordance with Venting of Equipment part of the *National Fuel Gas Code*, ANSI Z223.1/NFPA 54, sections 7.2, 7.3 or 7.4 of CAN/CSA B149.1, *Natural Gas and Propane Installation Code*, or applicable provisions of the local building codes.

2. Inspect the existing chimney and lining for structural soundness, corrosion and perforations. Repair as necessary.

3. Install vent pipe to slope upward at least 1/4" per lineal foot (21 mm per meter) between the draft hood outlet and the chimney.

   Installer le tuyau d'évent avec une pente ascendante minimum de 21 mm au mètre (1/4 po au pied) à la sortie du coupe-tirage et la cheminée.

4. Before connection of joints, inspect the vent pipe interior for foreign objects such as tools, equipment, rags, etc. and remove if present.

5. Insert vent pipe into but not beyond the inside wall of the chimney flue.

6. Do not connect vent connectors serving appliances vented by natural draft into any portion of mechanical draft systems operating under positive pressure.

7. Support horizontal portions of the venting system to prevent sagging by use of metal strapping or equivalent means. Locate supports at no more than 4 foot (1.2 meter) intervals.

   Fournir un support à toute portion horizontale du système d'évacuation à l'aide de courroies de métal ou une méthode équivalente afin de l'empêcher de s'affaisser. Placer les supports à des intervalles ne dépassant pas cent vingt deux (122) centimètres (4 po), ou en suivant les recommandations d' installation du fabricant.

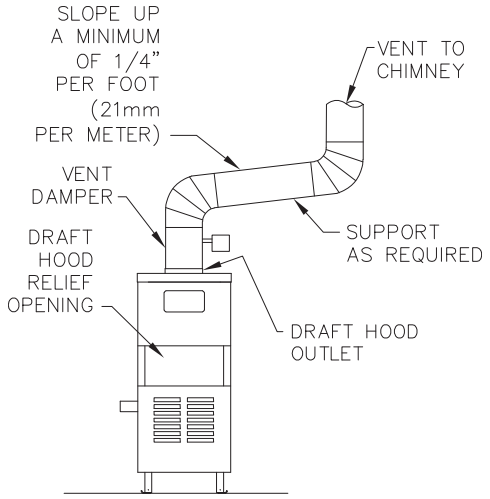

Figure 4.2: Venting with Vent Damper in Vertical Position

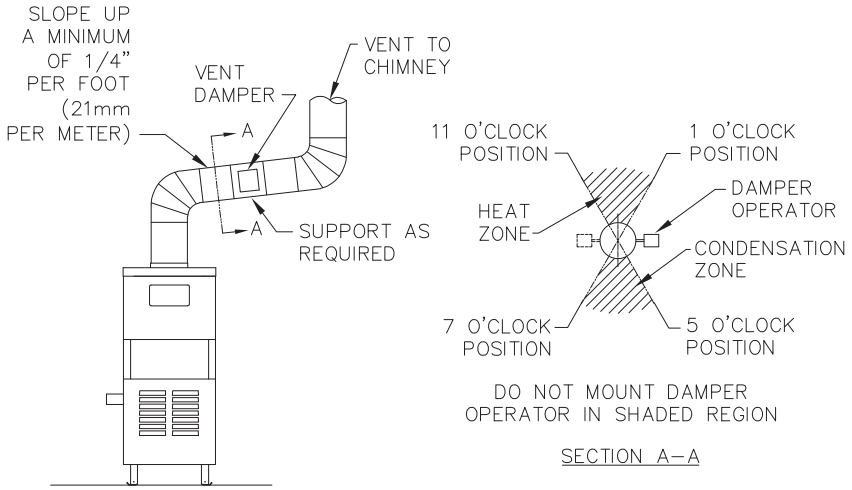

Figure 4.3: Venting with Vent Damper in Horizontal Position

D. BOILER REMOVAL FROM COMMON VENTING SYSTEM

At the time of removal of an existing boiler, follow these steps with each appliance remaining connected to the common venting system placed in operation, while the other appliances remaining connected to the common venting system are not in operation:

Au moment de retirer une chaudière existante, il est important de suivre les étapes suivantes pour chaque appareil raccordé au système d'évacuation commun qui sont en service, alors que les autres appareils demeurant raccordés au système d'évacuation commun ne sont pas en service :

a. Seal any unused openings in the common venting system.

   Sceller toute ouverture du système d'évacuation commun non utilisée.

b. Visually inspect the venting system for proper size and horizontal pitch and determine there is no blockage or restriction, leakage, corrosion and other deficiencies which could cause an unsafe condition.

   Effectuer un contrôle visuel du système d'évacuation pour vérifier la taille et la pente horizontale et s'assurer qu'il n'existe aucun blocage ou obstruction, fuite, corrosion ni tout autre problème pouvant menacer la sécurité.

c. Insofar as is practical, close all building doors and windows and all doors between the space in which the appliances remaining connected to the common venting system are located and other spaces of the building. Turn on any clothes dryers and any appliance not connected to common venting system. Turn on any exhaust fans, such as range hoods and bathroom exhausts, so they will operate at maximum speed. Do not operate a summer exhaust fan. Close fireplace dampers.

   Dans la mesure du possible, fermer toutes les portes et fenêtres de l'immeuble ainsi que toutes les portes entre l'espace dans lequel les appareils qui demeurent raccordés au système d'évacuation commun se trouvent et le reste de l'immeuble. Mettre en marche les sécheuses et tout autre appareil non raccordé au système d'évacuation commun. Mettre en marche tous les ventilateurs aspirant, tels que les hottes de cuisinière et les ventilateurs de salle de bain, en les faisant fonctionner à vitesse maximum. Ne pas faire fonctionner les ventilateurs aspirant d'été. Fermer les registres de foyers.

d. Place in operation the appliance being inspected. Follow the lighting instructions. Adjust thermostat so appliance will operate continuously.

   Mettre en service l'appareil à inspecter. Suivre les instructions concernant l'allumage. Régler le thermostat afin que l'appareil fonctionne sans arrêt.

e. Test for spillage at the draft hood relief opening after 5 minutes of main burner operation. Use the flame of a match or candle, or smoke from a cigarette, cigar, or pipe.

   Vérifier toute fuite à l'orifice de décharge du coupe-tirage après que le brûleur ait fonctionné pendant 5 minutes. Utiliser la flamme d'une allumette ou d'une chandelle ou encore la fumée d'une cigarette, d'un cigare ou d'une pipe.

f. After it has been determined that each appliance remaining connected to the common venting system properly vents when tested as outlined above, return doors, windows, exhaust fans, fireplace dampers and any other gas-burning appliance to their previous conditions of use.

   Après avoir établi que les résidus de combustion de chaque appareil qui demeure raccordé au système commun sont adéquatement évacués lorsque soumis au test décrit ci-dessus, remettre en place les portes, fenêtres, portes intérieures, ventilateurs aspirants, registres de foyer et appareils fonctionnant au gaz.

g. Any improper operation of the common venting system should be corrected so that the installation conforms with the current edition of the *National Fuel Gas Code*, ANSI Z223.1/NFPA 54 and/or CAN/CSA B149.1, *Natural Gas and Propane Installation Code*. When resizing any portion of the common venting system, the common venting system should be resized to approach the minimum size as determined using the appropriate tables in the *National Fuel Gas Code*, ANSI Z223.1/NFPA 54 and/or CAN/CSA B149.1, *Natural Gas and Propane Installation Code*.

   Tout fonctionnement inadéquat du système d'évacuation commun doit être corrigé de manière à respecter les normes du **National Fuel Gas Code,** ANSI Z223.1/NFPA 54 et/ou des Codes d'installation CAN/ACG B149**.** Lorsqu'il est nécessaire de modifier les dimensions de toute portion du système d'évacuation commun, ces dernières doivent être modifiées de manière à respecter les dimensions minimums indiquées dans les tableaux du chapitre « Sizing of Category I Venting Systems » du **National Fuel Gas Code,** ANSI Z223.1/NFPA 54 ou des Codes d'installation CAN/ACG B149

5. GAS PIPING

1. Size and install the gas supply piping properly in order to provide a supply of gas sufficient to meet the maximum demand without undue loss of pressure between the meter and the boiler.

2. Determine the volume of gas to be provided to the boiler in cubic feet per hour. To obtain this value, divide the Btu per hour rating (on the boiler rating plate) by the heating value of the gas in Btu per cubic feet. Obtain the heating value of the gas from the gas supplier. As an alternative, use Table 5.1, 5.2 or 5.3 on the next page to obtain the volume of gas to be provided to the boiler.

3. Use the value obtained above as the basis for piping sizing. Size the gas piping in accordance with Table 5.4. Consult the *National Fuel Gas Code* ANSI Z223.1/NFPA 54 and/or CAN/CSA B149.1, *Natural Gas and Propane Installation Code* for proper sizing options.

4. Locate the drop pipe adjacent to, but not in front of the boiler.

5. Install a sediment trap. See Figure 5.1. Locate a tee in the drop pipe at same elevation as the gas inlet connection to the boiler. Extend the drop pipe to a pipe cap.

6. Install a ground joint union ahead of the gas control assembly to permit servicing of the control. Some local codes require an additional service valve when using the combination gas controls. If your code requires such a valve, a suggested location is shown in Figure 5.1.

⚠ WARNING

Use a pipe joint sealing compound that is resistant to the action of liquefied petroleum gas. A non-resistant compound may lose sealing ability in the presence of this gas, resulting in a gas leak and fire or explosion potential.

7. Check piping for leaks.

   Use an approved gas detector, a non-corrosive leak detection fluid or other leak detection method. If leaks are found, turn off all gas flow and repair as necessary.

⚠ WARNING

When checking for leaks, do not use matches, candles, open flames or other methods that provide a source of ignition. This can ignite a gas leak, resulting in fire or explosion.

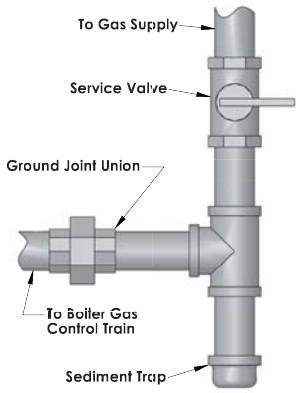

Figure 5.1: Gas Connection to Boiler

8. Disconnect the boiler and its individual shut-off valve from the gas supply piping system during any pressure testing of that system at test pressure in excess of 1/2 psig (3.5 kPa).

⚠ CAUTION

Do not subject the gas valve to more than 1/2 psi (3.5 kPa) pressure. Doing so may damage the valve.

   Isolate the boiler from the gas supply piping system by closing its individual service valve during any pressure testing of the gas supply piping system at test pressure equal to or less than 1/2 psig (3.5 kPa).

9. Minimum permissible supply pressure for purposes of input adjustment:

Natural Gas	5.0″ WC (1.2 kPa)
All MI™ LP Gas	11.0″ WC (2.7 kPa)

Maximum permissible supply pressure to the boiler:

All MI/MIHII™ Natural Gas	13.5″ WC (3.5 kPa)
All MI™ LP Gas	13.5″ WC (3.5 kPa)

Table 5.1: MI™ Boiler – Natural Gas

Model	Input	
	Cubic Feet / Hour	Cubic Meters / Hour
MI-03	70	2.0
MI-04	105	3.0
MI-05	140	4.0
MI-06	175	5.0
MI-07	195	5.5
MI-08	227.5	6.4
MI-09	260	7.4

Table 5.2: MI™ Boiler – LP Gas

Model	Input	
	Cubic Feet / Hour	Cubic Meters / Hour
MI-03	28	0.8
MI-04	42	1.2
MI-05	56	1.6
MI-06	70	2.0
MI-07	78	2.2
MI-08	91	2.6
MI-09	104	2.9

Table 5.3: MIHII™ Boiler – Natural Gas

Model	Input	
	Cubic Feet / Hour	Cubic Meters / Hour
MIHII-03	65	1.8
MIHII-04	97.5	2.8
MIHII-05	130	3.7
MIHII-06	162.5	4.6

Table 5.4: Pipe Capacity

Capacity of pipe of different diameters and lengths in cubic feet per hour [cubic meter per hour] with a pressure drop of 0.3 inches of water (75 Pa) and specific gravity of 0.60. No allowance for an ordinary number of fittings is required.

Pipe Length in Feet [Meters]	3/4" Pipe	1" Pipe	1-1/4" Pipe	1-1/2" Pipe
10 [3.0]	278 [7.9]	520 [14.7]	1050 [29.7]	1600 [45.3]
20 [6.1]	190 [5.4]	350 [9.9]	730 [20.7]	1100 [31.1]
30 [9.1]	152 [4.3]	285 [8.1]	590 [16.7]	890 [25.2]
40 [12.2]	130 [3.7]	245 [6.9]	500 [14.2]	760 [21.5]
50 [15.2]	115 [3.3]	215 [6.1]	440 [12.5]	670 [19.0]
60 [18.3]	105 [3.0]	195 [5.5]	400 [11.3]	610 [17.3]

Maximum Capacity Correction Factors for Specific Gravity other than 0.60.

Specific Gravity	**0.50**	**0.55**	**0.60**	**0.65**	**0.70**	**0.75**
Correction Factor	1.10	1.04	1.00	0.96	0.93	0.90
Specific Gravity	**0.80**	**0.85**	**0.90**	**1.00**	**1.10**	**1.20**
Correction Factor	0.87	0.84	0.82	0.78	0.74	0.71
Specific Gravity	**1.30**	**1.40**	**1.50**	**1.60**	**1.70**	**1.80**
Correction Factor	0.68	0.66	0.63	0.61	0.59	0.58

6. ELECTRICAL

Install all electrical wiring in accordance with the *National Electrical Code* and local requirements.

⚠ NOTICE

This unit when installed must be electrically grounded in accordance with the requirements of the authority having jurisdiction or, in the absence of such requirements, with the current edition of the *National Electrical Code*, ANSI/NFPA 70 and/or the *Canadian Electrical Code*, Part 1 CSA C22.1, Electrical Code.

A. WIRING

1. See Figure 6.1 for location of wiring and controls. Use Figures 6.2 and 6.3 to connect the boiler to a power supply and to connect components to the boiler.
2. Connect the boiler by a separate, permanently live electrical supply line with a fused switch.
3. Connect the vent damper harness to the damper motor as shown in Figure 6.1.
4. Adjust the thermostat heat anticipator to 0.2 Amp.

B. ZONED SYSTEM WIRING

Refer to Limit Control Instructions for details on Zone Wiring. When wiring a zoned heating system, follow all applicable codes, ordinances and regulations.

⚠ NOTICE

Do not power zone valves directly from the boiler limit. Doing so will greatly reduce the life of the transformer. Use a separate transformer sized to handle the total of all zone valve electrical loads.

C. CONTROLS

1. For proper location of controls and accessories refer to Figure 6.1 and Section 11.
2. See the attached control sheets for specific details regarding the installation of the various controls.
3. This boiler is supplied with safety devices in addition to the limit. For a description of these devices and how they work to ensure the safe operation of the boiler, see Section 7B.
4. If the circulator is mounted in the supply piping, provide longer wiring harness as required.

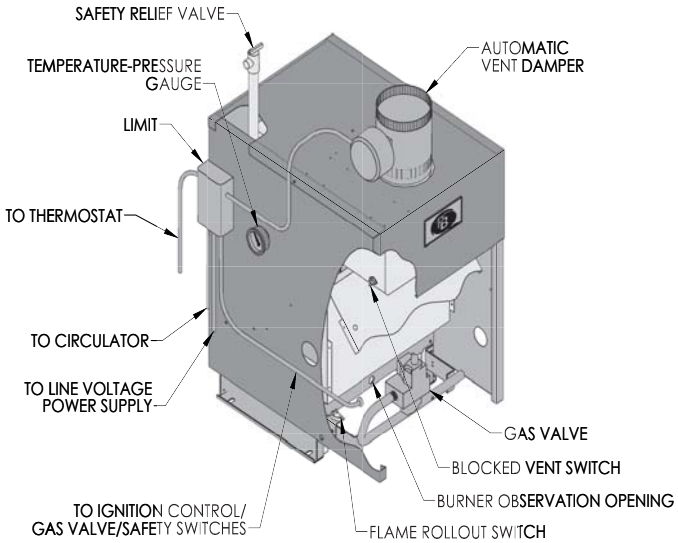

Figure 6.1: Wiring, Controls and Safety Devices

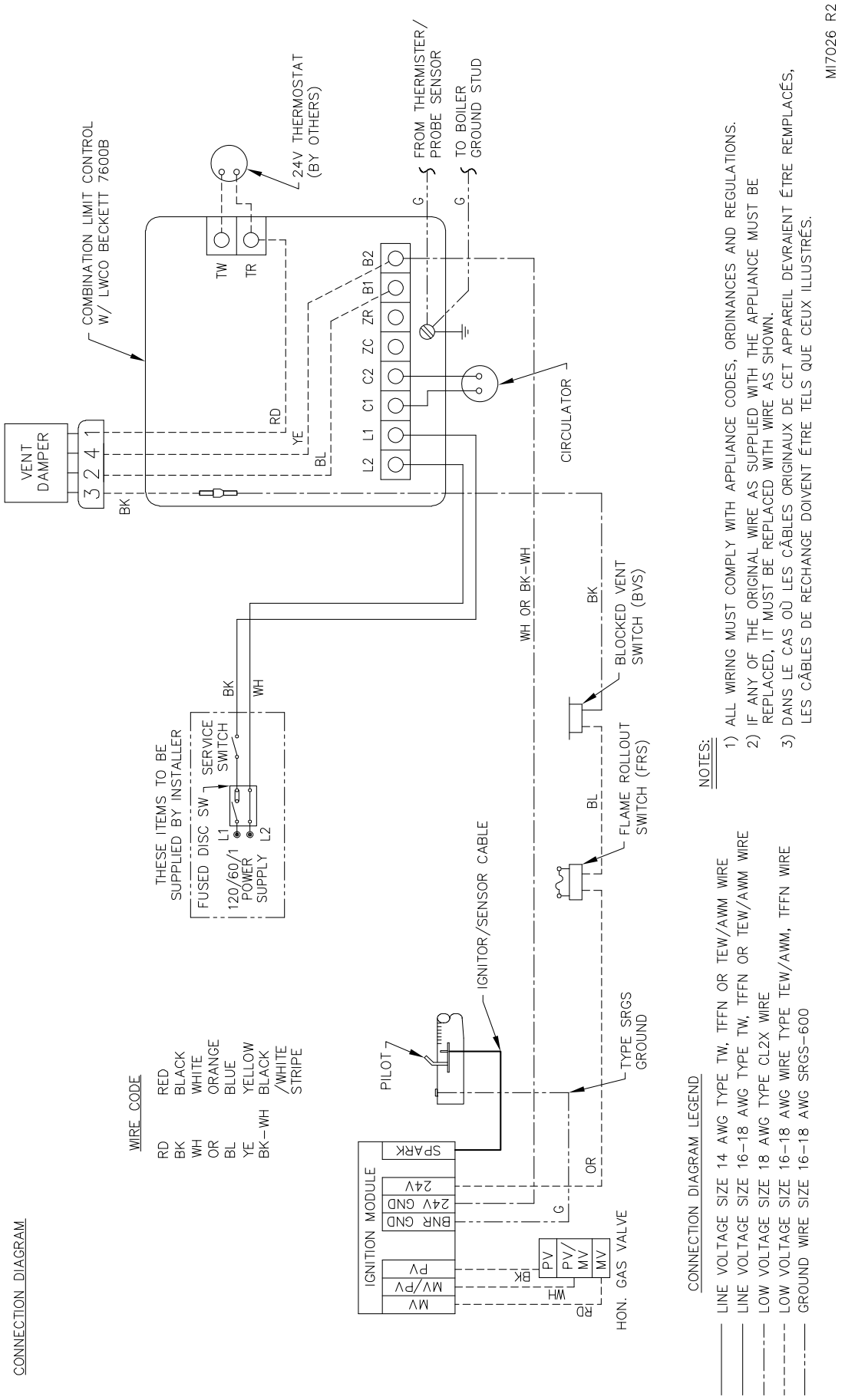

Figure 6.2: Wiring Diagram – Intermittent Ignition 7600B Control

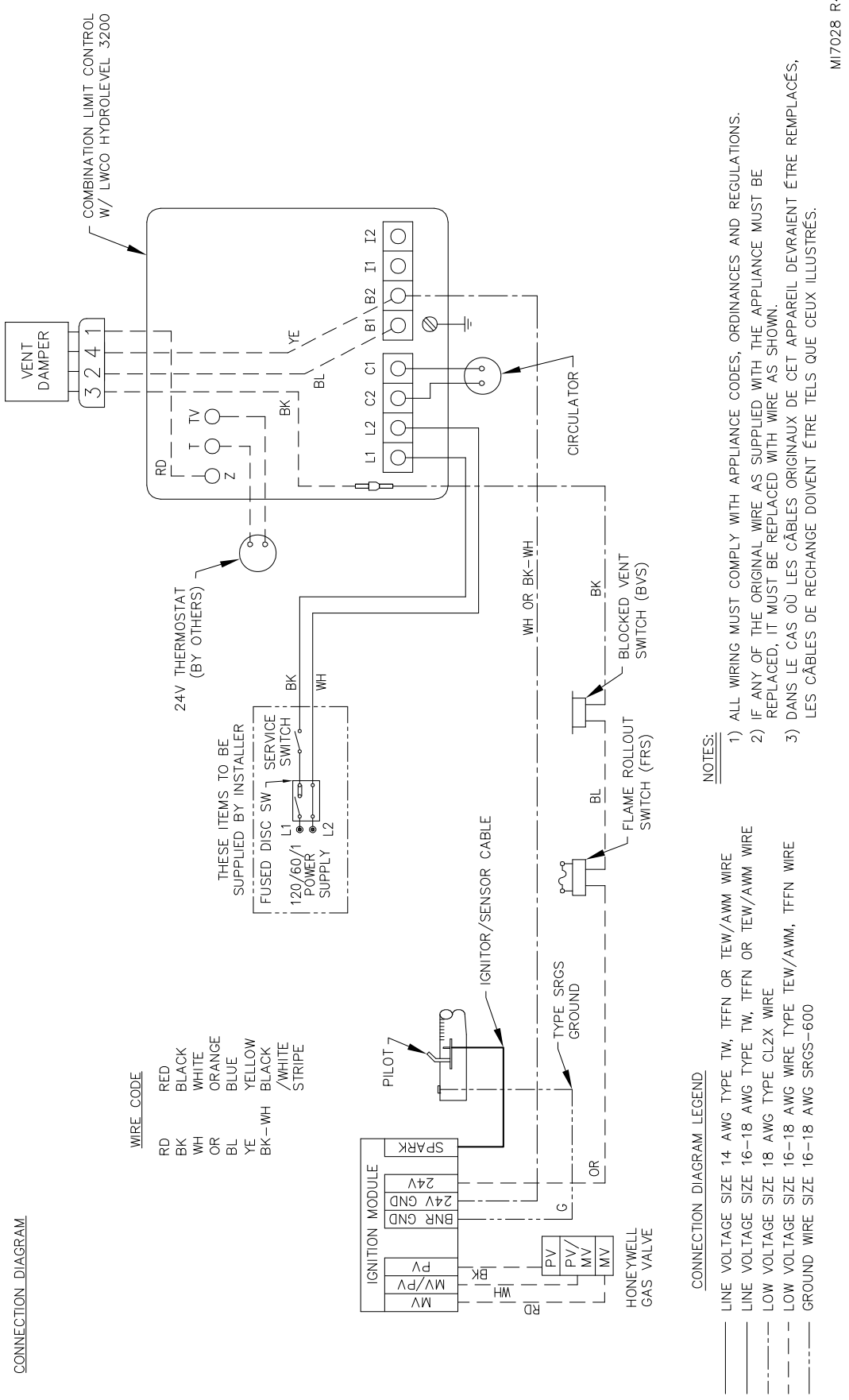

Figure 6.3: Wiring Diagram – Intermittent Ignition 3200 Control

D. SEQUENCE OF OPERATION

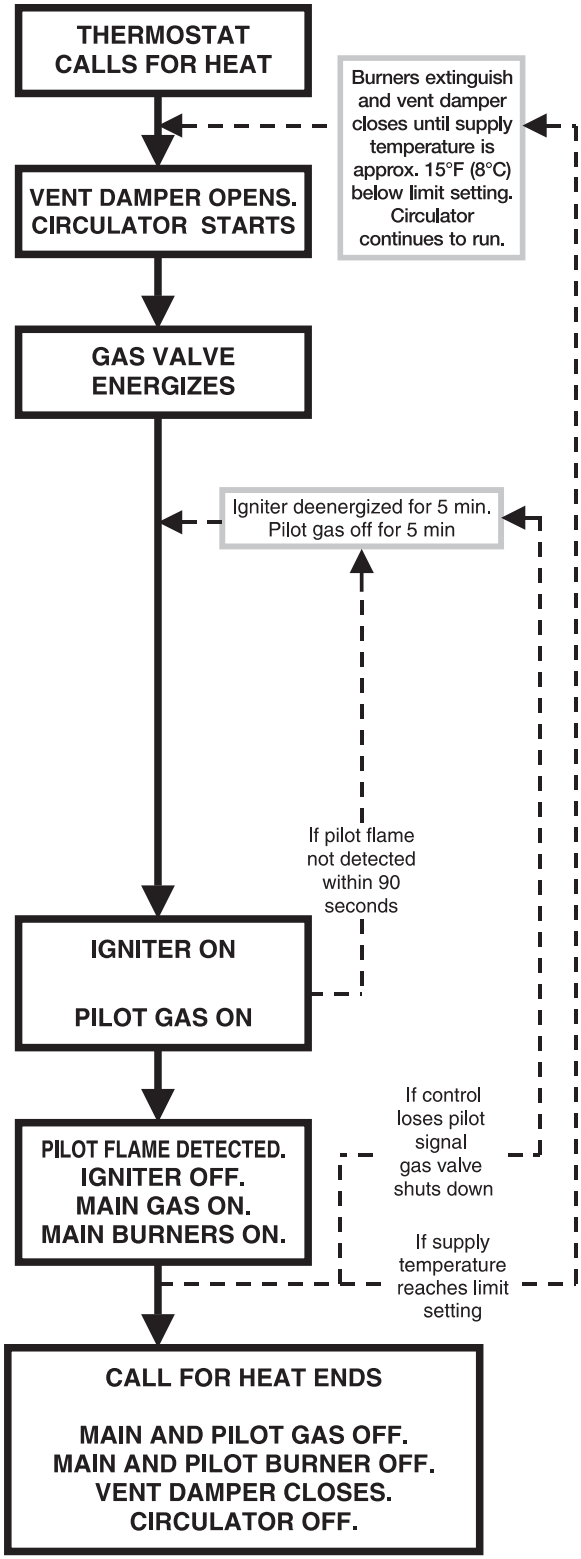

Figure 6.4: Intermittent Ignition System Operating Sequence

7. START-UP PROCEDURES

A. COMPLETING THE INSTALLATION

1. Confirm that all water, gas and electricity are turned off.
2. Inspect the boiler combustion chamber for foreign objects and remove if present.
3. Check physical condition of burners and pilot. Make certain that there are no unusual bends or perforations in the burners or pilot. Replace components if necessary.
4. Verify that water piping, venting, gas piping and electrical wiring and components are installed properly. Refer back to previous sections of these instructions as well as equipment manufacturer's instructions as necessary.
5. Fill the boiler and system with water, making certain to vent all air from all points in the system. To check water level in the system, open and close each vent in the system. Water should exit from each vent when it is opened.
6. The pressure reducing valve on the fill line will typically allow the system to be filled and pressurized to 12 psi (83 kPa). Consult the valve and expansion tank manufacturer for more specific information.
7. See Section 1 - Preinstallation for boiler water treatment requirements.
8. Check joints and fittings throughout the system for leaks. If leaks are found, drain the system and repair as required.
9. Connect a manometer to the gas valve on the valve outlet (gas manifold). Use the 1/8 NPT tapping provided.
10. Confirm that the gas supply pressure to the boiler is above the minimum and below the maximum values for the gas being used. See the end of Section 5 for these values. If a supply pressure check is required, isolate the boiler and gas valve before performing the pressure check. If the supply pressure is too high or too low, contact the gas supplier.
11. Turn on electricity and gas to boiler.
12. Light the boiler by following the Lighting/Operating Instructions label mounted to the jacket panel. The initial ignition may require several tries as the piping is purged of air.
13. Use the sequence descriptions in Figures 6.2, 6.3 and 6.4 in Section 6 (Electrical) to follow light-off and shutdown sequences and to assist in diagnosing problems. If the boiler does not function properly, consult Section 8, Troubleshooting.
14. The gas manifold and control assembly are made of gas-tight, completely factory assembled and installed components of the base assembly. See Figure 7.1.

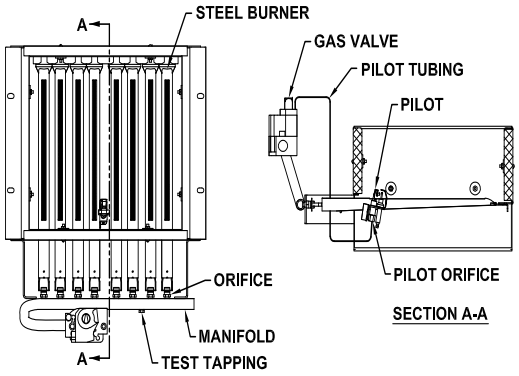

Figure 7.1: Gas Valve, Manifold and Burner Assembly – Intermittent Ignition

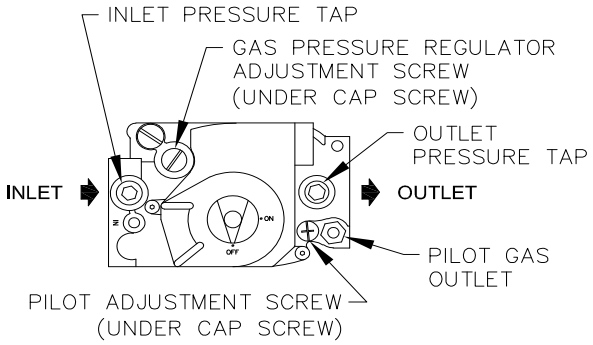

Figure 7.2: Valve Tapping and Adjustment Screw Locations

FOR YOUR SAFETY READ BEFORE LIGHTING

WARNING: If you do not follow these instructions exactly, a fire or explosion may result causing property damage, personal injury, or loss of life.

A. This appliance is equipped with an ignition device which automatically lights the pilot. Do not try to light the pilot by hand.

B. BEFORE OPERATING smell all around the appliance area for gas. Be sure to smell next to the floor because some gas is heavier than air and will settle on the floor.

WHAT TO DO IF YOU DO SMELL GAS

- Do not try to light any appliance.
- Do not touch any electric switch; do not use any phone in your building.
- Immediately call your gas supplier from a neighbor's phone. Follow the gas supplier's instructions.
- If you cannot reach your gas supplier, call the fire department.

C. Use only your hand to push in or turn the gas control knob. Never use tools. If the knob will not push in or turn by hand, don't try to repair it, call a qualified service technician. Force or attempted repair may result in a fire or explosion.

D. Do not use this appliance if any part has been under water. Immediately call a qualified service technician to inspect the appliance and to replace any part of the control system and any gas control which has been under water.

OPERATING INSTRUCTIONS

1. STOP! Read the safety information above on this label.
2. Set the thermostat or operating control to lowest setting.
3. Turn off all electric power to the appliance.
4. This appliance is equipped with an ignition device which automatically lights the pilot. Do not try to light the pilot by hand.

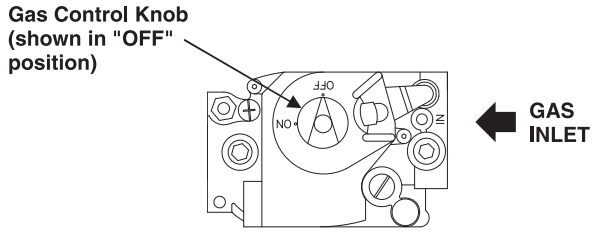

5. If the gas valve is not visible, remove control access panel.
6. If the gas control knob is not in the "OFF" position, turn the knob clockwise ↻ to "OFF".
7. Wait five (5) minutes to clear out any gas. Then smell for gas, including near the floor. If you smell gas, STOP! Follow "B" in the safety information above on this label. If you don't smell gas, go to the next step.
8. Turn the gas control knob counterclockwise ↺ to "ON".
9. Replace control access panel, if applicable.
10. Turn on all electrical power to the appliance.
11. Set thermostat or operating control to desired setting.
12. If the appliance will not operate, follow the instructions "To Turn Off Gas To Appliance" and call your service technician or gas supplier.

TO TURN OFF GAS TO APPLIANCE

1. Set the thermostat or operating control to lowest setting.
2. Turn off all electric power to the appliance if service is to be performed.
3. If the gas valve is not visible, remove the control access panel.
4. Turn the gas control knob clockwise ↻ to "OFF".
5. Replace control access panel, if applicable.

HSP VR8204/VR8304 9181R REV 2 (MM/YY)

Figure 7.3: Operating Instructions

POUR VOTRE SÉCURITÉ, LISEZ AVANT L'ALLUMAGE

MISE EN GARDE: Négliger de suivre ces instructions à la lettre pourrait provoquer un incendie ou une explosion causant des dégâts matériels, des blessures ou la mort.

A. Cet appareil est muni d'un dispositif d'allumage automatique de la veilleuse. Ne tentez pas d'allumer la veilleuse à la main.

B. AVANT DE METTRE EN MARCHE, sentez autour de l'appareil pour détecter toute odeur de gaz. Étant donné que certains gaz sont plus lourds que l'air et se déposent sur le sol, s'assurer de bien sentir près du plancher.

QUE FAIRE SI VOUS DÉTECTEZ UNE ODEUR DE GAZ

- Ne pas tenter d'allumer l'appareil
- Ne toucher à aucun interrupteur électrique; n'utiliser aucun appareil téléphonique dans l'immeuble.
- Contactez immédiatement votre fournisseur de gaz à partir du téléphone d'un voisin. Suivre les instructions données par votre fournisseur de gaz.
- S'il est impossible de rejoinder le fournisseur de gaz, appeler le service des incendies.

C. N'utilisez que votre main pour appuyer ou tourner le bouton de commande du gaz. Ne jamais utiliser d'outils. S'il est impossible d'enfoncer ou de tourner le bouton à la main, ne tentez pas de le réparer. Appelez un technicien d'entretien qualifié. Une force excessive ou une tentative de réparation peut provoquer un incendie ou une explosion.

D. N' utilisez pas cet appareil ni aucune de ses pièces si elles ont été immergées. Contactez immédiatement un technicien d'entretien qualifié pour inspecter l'appareil et remplacer toute pièce du système de régulation du débit gazeux et toute commande de gaz ayant été immergée.

DIRECTIVES DE FONCTIONNEMENT

1. ARRÊTEZ! Lisez les consignes de sécurité plus haut sur cette étiquette.
2. Réglez le thermostat ou l'appareil de réglage au niveau le plus bas.
3. Coupez toute l'alimentation électrique de l'appareil.
4. Cet appareil est muni d'un dispositif d'allumage automatique de veilleuse. Ne tentez pas d'allumer la veilleuse à la main.

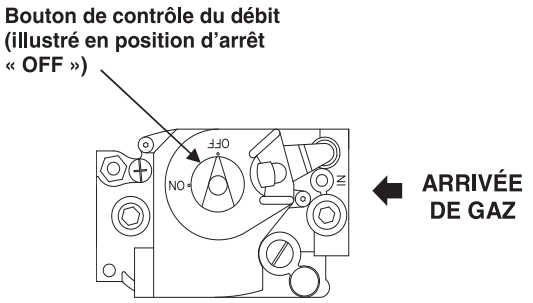

5. Si la soupage d'alimentation en gaz n'est pas visible, retirez le panneau d'accès.
6. Si le bouton de commande du gaz n'est pas en position « OFF », tournez le bouton dans le sens des aiguilles d'une montre ↻ pour les mettre à « OFF ».
7. Attendre cinq (5) minutes pour que tout le gaz présent puisse s'échapper. Sentir autour de l'appareil pour détecter toute odeur de gaz, incluant près du sol. Si vous sentez une odeur de gaz. ARRÊTEZ! Suivez les consignes de sécurité apparaissant en « B » plus haut sur cette étiquette. Si vous ne détectez aucune odeur de gaz, passez à l'étape suivante.
8. Tournez le bouton de commande dans le sens contraire des aiguilles d'une montre ↺ pour le mettre en position de marche « ON ».
9. Replacez le panneau d'accès du régulateur de débit, le cas échéant.
10. Remettez en marche toute l'alimentation électrique de l'appareil.
11. Réglez le thermostat ou l'appareil de réglage au niveau désiré.
12. Si l'appareil ne se met pas en marche, suivez les instructions ci-dessous : « Couper l'alimentation en gaz de l'appareil » et appelez votre technicien d'entretien ou fournisseur de gaz.

COUPER L'ALIMENTATION EN GAZ DE L'APPAREIL

1. Réglez le thermostat ou l'appareil de réglage au niveau le plus bas.
2. Si des travaux d'entretien doivent être effectués, couper toute l'alimentation électrique de l'appareil.
3. Si la soupape d'alimentation en gaz n'est pas visible, retirez le panneau d'accès.
4. Tournez le bouton de commande dans le sens des aiguilles d'une montre ↻ pour les mettre en position d'arrêt « OFF ».
5. Replacez le panneau d'accès du régulateur de débit, le cas échéant.

HSP VR8204/VR8304 9414 REV 0 (MM/AA)

Figure 7.4: Operating Instructions

B. CONTROL DESCRIPTIONS

See Figure 6.1 in Section 6 (Electrical) for locations of these devices.

1. FLAME ROLL-OUT SAFETY SHUT-OFF SWITCH (FLAME ROLL-OUT SWITCH) – A thermally activated switch located between the first burner from the left and the manifold bracket. The flame roll-out safety shut-off switch will sense excessive temperature caused by continued flame roll-out and shut down main burner gas. This is a non-recycling switch that must be replaced once it has been activated and the cause of the roll-out eliminated.

2. VENT SAFETY SHUT-OFF SWITCH (SPILL SWITCH) – A thermally activated, manually resetable switch located in the draft hood relief opening. If venting system becomes partially or totally blocked, the vent safety shut-off switch will sense excessive temperature caused by flue products exiting the draft hood relief opening and shut down main burner gas.

3. LIMIT WITH LOW WATER CUT-OFF – A Beckett 7600B or Hydrolevel 3200 control incorporate a thermally activated adjustable switch that will shut down main burner gas if the supply water temp exceeds the control setting. It will also shut down main burner gas if the water level in the boiler drops below the control's sensing well. The temperature switch will automatically reset when the boiler supply water temp drops below the control setpoint. The low water cut-off switch will automatically reset when the water level is above the control's sensing well.

4. LOW WATER CUT-OFF (FOR GRAVITY SYSTEMS OR HOT WATER BOILERS INSTALLED ABOVE RADIATION LEVEL) – If limit control does not incorporate a low water cut-off feature then install a level-sensing device (float or probe) located in supply piping near the boiler.

C. ADJUSTMENT OF GAS PRESSURE REGULATOR

1. Using the manometer setup installed in part 7A, set manifold pressure as follows for various gases.
   a. Natural Gas . . .3.5″ Water Column (0.9 kPa)
   b. LP Gas . . . . .10.0″ Water Column (2.5 kPa)
2. To adjust gas pressure, turn adjusting screw of gas pressure regulator counterclockwise to decrease pressure, clockwise to increase pressure. Refer to Figure 7.2 for location of gas pressure regulator. Replace the cap screw when adjustment is complete.
3. In no case should the final manifold pressure vary more than ±0.3 inches water column (0.07 kPa) from the above specified pressures. Any necessary major changes in the flow should be made by changing the size of the burner orifice spuds.
4. When adjustment is complete, turn off boiler, gas flow and electricity to boiler. Remove manometer connection from valve and plug tapping with plug provided. Turn utilities back on and resume checkout.

D. CHECKING BURNER INPUT

1. Refer to rating label mounted on the jacket top panel to obtain the rated BTU per hour input. In no case shall the input to the boiler exceed the value shown on the rating label.
2. Check input by use of the following formulas (PB Heat, LLC suggests reading meter for 2 Cu. Ft.):

   U.S. Customary Units

   $$\text{Input (BTU/Hr.)} = \frac{3600 \times F \times H}{T}$$

   Where:
   3600 = Seconds per hour
   F = Cubic Feet of Gas Registered on Meter
   H = Heat Value of Gas in BTU/Cubic Feet
   T = Time in Seconds the Meter is Read

   SI Metric Units

   $$\text{Input (kW)} = \frac{3600 \times F \times H}{T \times 3.6}$$

   Where:
   3600 = Seconds per hour
   3.6 = Megajoule (MJ) per kilowatt hour (kwhr)
   F = Cubic Meters of Gas Registered on Meter
   H = Heating Value of Gas in MJ/Cubic Meter
   T = Time in Seconds the Meter is Read

3. As an alternative, use Table 7.1(a) and 7.1(b). Use the heating value provided by gas supplier. Use a stopwatch to record the time it takes for 2 cubic feet (0.0566 cubic meter) of gas to pass through the meter. Read across and down to determine rate.

Table 7.1a: Meter Conversion – Natural Gas (U.S. Customary Units)

Burner inputs in Btu/hr for various meter timings and heat values. (Table based on 2 cubic feet of gas through meter).

Time that meter is read (sec)	Heat Value of Gas (Btu/cubic foot)		
	1000	1025	1050
25	288000	295200	302400
30	240000	246000	252000
35	205714	210857	216000
40	180000	184500	189000
45	160000	164000	168000
50	144000	147600	151200
55	130909	134182	137455
60	120000	123000	126000
65	110769	113538	116308
70	102857	105429	108000
75	96000	98400	100800
80	90000	92250	94500
85	84706	86824	88941
90	80000	82000	84000
95	75789	77684	79579
100	72000	73800	75600
105	68571	70286	72000
110	65455	67091	68727
115	62609	64174	65739
120	60000	61500	63000
125	57600	59040	60480

Table 7.1b: Meter Conversion – Natural Gas (SI Metric Units)

Burner inputs in kW for for various meter timings and heat values. (Table based on 0.0566 cubic meter of gas through meter).

Time that meter is read (sec)	Heat Value of Gas (MJ/cubic meter)		
	37.26	38.19	39.12
25	84.36	86.46	88.57
30	70.30	72.05	73.81
35	60.25	61.76	63.26
40	52.72	54.04	55.35
45	46.86	48.03	49.20
50	42.18	43.23	44.28
55	38.34	39.30	40.26
60	35.15	36.03	36.90
65	32.44	33.25	34.06
70	30.13	30.88	31.63
75	28.12	28.82	29.52
80	26.36	27.02	27.68
85	24.81	25.43	26.05
90	23.43	24.02	24.60
95	22.20	22.75	23.31
100	21.09	21.62	22.14
105	20.08	20.59	21.09
110	19.17	19.65	20.13
115	18.34	18.80	19.25
120	17.57	18.01	18.45
125	16.87	17.29	17.71

E. CHECK-OUT PROCEDURE

1. After starting the boiler, be certain all controls are working properly. Check to be sure that the limit will shut off the boiler in the event of excessive water temperature. This can be done by lowering the limit setting until the main burners shut down. When proper limit function is confirmed, return the dial to its previous setting.

2. To check operation of the ignition system safety shut-off features:
   - Refer to Figure 7.3 Operating Instructions and Figure 6.4 Intermittent Ignition System Operating Sequence.

3. Low Water Cut-Off (if used) – Consult the manufacturer's instructions for the low water cut-off operational check procedure.

4. Check the system to make sure there are no leaks or overfilling problems which might cause excessive make-up water to be added. Make-up water causes liming in the boiler and brings in oxygen. Oxygen can cause severe damage to the boiler though oxygen corrosion pitting.

5. Check the expansion tank and automatic fill valve (if used) to confirm that they are operating correctly. If either of these components causes high pressure in the system, the boiler relief valve will weep or open, allowing fresh water to enter the system.

6. Do not allow the system controls to subject the boiler to excessively low water temperatures, which would cause condensation of flue gases and corrosion of the boiler. Operate the boiler at a temperature above 130°F (54°C). Adjust the boiler limit as required to maintain boiler temperature above this level.

7. Check the general condition of the system including piping support, joints, etc. Check cleanliness of the radiators, baseboard units and/or convectors. Clean them to the extent possible. If radiators do not heat evenly, vent any remaining air from them.

8. Review operation and User's Information Manual with end-user.

9. Complete the Warranty Card and submit it to PB Heat, LLC.

10. Hang the Installation, Operation and Maintenance Manual and User's Information Manual in an accessible position near the boiler.

8. TROUBLESHOOTING

A. SHUT-DOWN CAUSED BY PILOT OUTAGE, BLOCKED VENT SHUT-OFF SWITCH OR FLAME ROLL-OUT SAFETY SHUT-OFF SWITCH

In the event of a shut-down caused by a pilot outage, action of the blocked vent shut-off switch or flame roll-out safety shut-off switch effecting a shut-down of the main burners:

a. Refer to the Operating Instructions in Figure 7.3 to properly turn off the gas to the boiler.

b. Turn off all electric power to the boiler.

c. Call a qualified heating service organization or local gas company and have the cause of the shut-down investigated and corrected.

d. Refer to Lighting/Operating Instructions to re-start boiler.

B. TROUBLESHOOTING GUIDES

Use Table 8.1 to assist in determining causes and providing corrective actions to boiler problems. Refer also to Figure 8.1 to troubleshoot the Intermittent Ignition System Control. These guides must be used only by qualified service technicians. These individuals must follow all applicable codes and regulations in repair of any boiler problems.

⚠ DANGER

When servicing or replacing items that communicate with the boiler water, be certain that:

- **There is no pressure on the boiler.**
- **The boiler is not hot.**
- **The power is off.**

When servicing the gas valve or pilot, be certain that:

- **The gas is off.**
- **The electricity is off.**

⚠ WARNING

Do not use this appliance if any part has been under water. Improper or dangerous operation may result. Immediately call a qualified service technician to inspect the boiler and to replace any part of the control system and any gas control which has been under water.

⚠ CAUTION

Label all wires prior to disconnection when servicing controls. Wiring errors can cause improper and dangerous operation. Verify proper operation after servicing.

⚠ CAUTION

Should overheating occur or the gas supply fail to shut off, do not turn off or disconnect the electrical supply to the pump. This may aggravate the problem and increase the likelihood of boiler damage. Instead, shut off the gas supply at a location external to the appliance.

Table 8.1: Boiler Troubleshooting Guide

PROBLEM	POSSIBLE CAUSES	CORRECTIVE ACTIONS
Burners not functioning.	1. No power. 2. Limit not working. 3. Flame rollout switch open. 4. Blocked vent switch open. 5. Gas off at boiler gas valve. 6. Gas off external to boiler. 7. Plugged orifice spuds. 8. Defective gas valve. 9. Improper wiring. 10. Vent damper malfunctioning.	1. Check line voltage wiring and fuses. 2. Check wiring and contacts, relay, temperature setting. Clean and adjust as necessary. 3. Replace switch. Locate cause and correct. 4. Reset blocked vent switch. Locate cause and correct. 5. Start boiler using Lighting/Operating Instructions. 6. Check any gas valves in the line. 7. Check, clean and re-install. 8. Use Figure 8.1 to troubleshoot intermittent ignition gas valve. Replace if necessary. 9. Check and correct in accordance with wiring diagrams in Section 6. 10. Refer to vent damper manufacturer's instructions. Replace if necessary.
Burners will not shut down.	1. Defective gas valve. 2. Short circuit.	1. Use Figure 8.1 to troubleshoot intermittent ignition gas valve. Replace if necessary. 2. Check and correct wiring.
Flashback or burning at orifice spuds.	1. Manifold gas pressure too low. 2. Improperly sized/drilled orifice spuds. 3. Leaking gas valve. 4. Burrs on orifice. 5. Low supply gas pressure. 6. Excessive downdraft or draft problems in boiler room.	1. Adjust to proper pressure. 2. Install correct spuds. 3. Replace valve. 4. Remove burrs. 5. Contact gas supplier if natural gas. Adjust regulator if LP gas. 6. Check air supply, ventilation and venting system.
Delayed ignition.	1. Insufficient pilot flame. 2. Pilot burner/orifice clogged. 3. Overfiring. 4. Misaligned burners or pilot. 5. Draft problem in boiler room.	1. Increase pilot gas flow. 2. Clean pilot burner and orifice. 3. Reduce rate to input on rating label. 4. Realign burners or pilot. 5. Check air supply, ventilation and venting system.
Excessive condensation in vent.	1. Underfiring. 2. Limit (Aquastat) set too low. 3. Vent pipe too long. 4. Inadequate chimney or venting system.	1. Increase rate to input on rating label. 2. Reset Aquastat to higher setting. 3. Reposition boiler to reduce length. 4. Check chimney and venting recommendations.
Boiler not heating properly.	1. Underfiring. 2. Limit set too low. 3. Air in system. 4. Circulator malfunctioning. 5. Circulation system clogged. 6. Incorrect thermostat heat anticipator setting.	1. Increase rate to input on rating label. 2. Reset Aquastat to higher setting. 3. Vent air from all points in system. 4. Check circulator, replace if necessary. 5. Shut down and cool boiler, drain and flush system. 6. Adjust heat anticipator.
Fumes or gas odors	1. Leaks in gas piping or fittings. 2. Leaks in gas service line or meter. 3. Obstructed chimney. 4. Obstructed flueways or vent. 5. Undersized chimney or vent, high draft loss in vent. 6. Draft problem in boiler room. 7. Overfiring. 8. Vent damper malfunctioning.	1. Locate and repair or replace. 2. Shut down boiler and notify gas provider. 3. Check, repair and/or clean chimney. 4. Clean flueways or vent and remove obstructions. 5. Check National Fuel Gas Code and vent manufacturer's recommendations. 6. Check air supply, ventilation and venting system. 7. Reduce rate to input on rating label. 8. Refer to vent damper manufacturer's instructions. Replace if necessary.

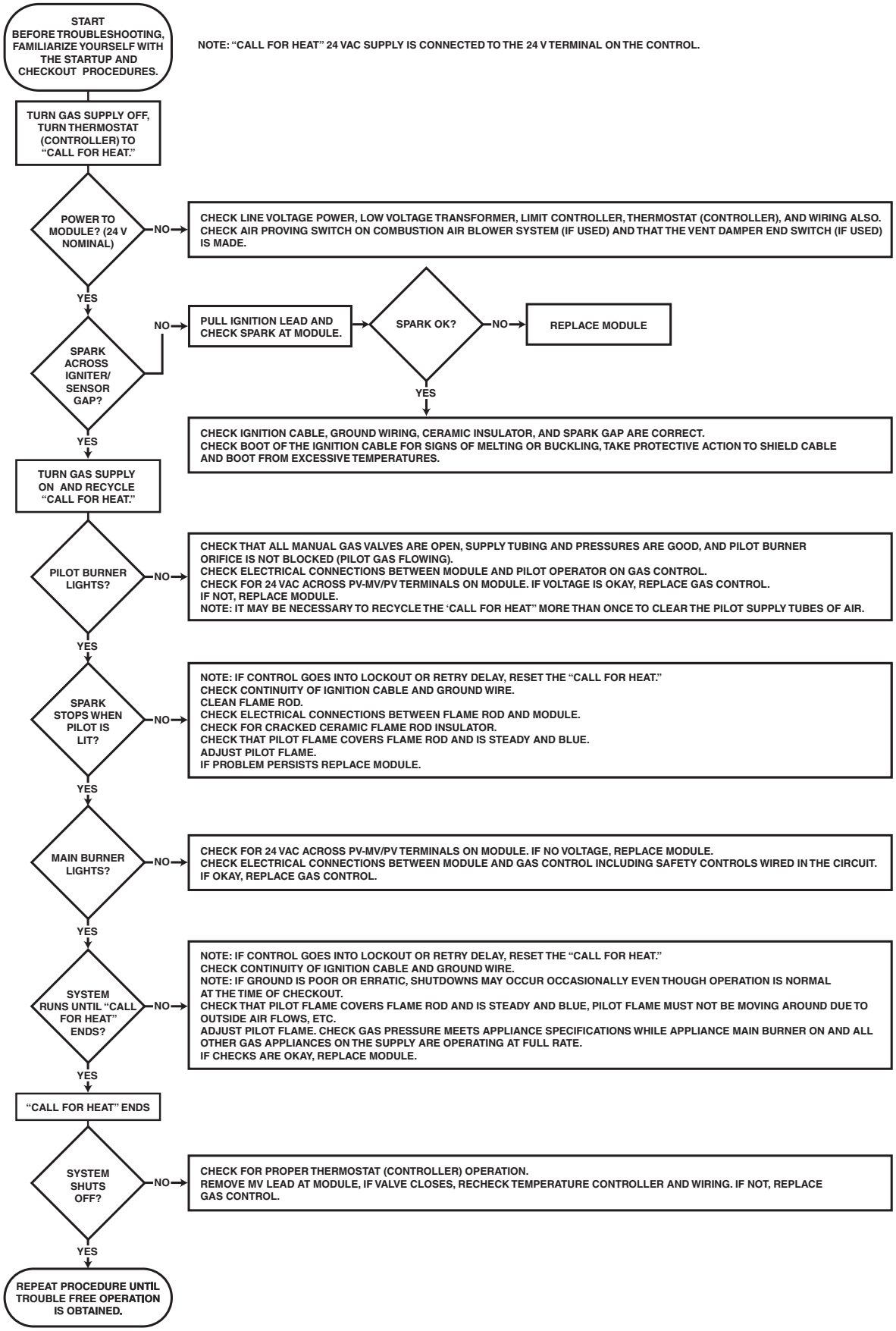

Figure 8.1: Intermittent Ignition System Troubleshooting Sequence

9. MAINTENANCE

⚠ WARNING

Product Safety Information
Refractory Ceramic Fiber Product

This appliance contains materials made from refractory ceramic fibers (RCF). Airborne RCF, when inhaled, have been classified by the International Agency for Research on Cancer (IARC), as a possible carcinogen to humans. After the RCF materials have been exposed to temperatures above 1800°F (980°C), they can change into crystalline silica, which has been classified by the IARC as carcinogenic to humans. If particles become airborne during service or repair, inhalation of these particles may be hazardous to your health.

Avoid Breathing Fiber Particulates and Dust

Suppliers of RCF recommend the following precautions be taken when handling these materials:

Precautionary Measures:
Provide adequate ventilation.
Wear a NIOSH/MSHA approved respirator.
Wear long sleeved, loose fitting clothing and gloves to prevent skin contact.
Wear eye goggles.
Minimize airborne dust prior to handling and removal by water misting the material and avoiding unnecessary disturbance of materials.
Wash work clothes separately from others. Rinse washer thoroughly after use.
Discard RCF materials by sealing in an airtight plastic bag.

First Aid Procedures:
Inhalation: If breathing difficulty or irritation occurs, move to a location with fresh clean air. Seek immediate medical attention if symptoms persist.
Skin Contact: Wash affected area gently with a mild soap and warm water. Seek immediate medical attention if irritation persists.
Eye Contact: Flush eyes with water for 15 minutes while holding eyelids apart. Do not rub eyes. Seek immediate medical attention if irritation persists.
Ingestion: Drink 1 to 2 glasses of water. Do not induce vomiting. Seek immediate medical attention.

A. GENERAL

1. Disconnect this boiler from the gas supply piping during any pressure testing of the gas system.

2. Check pipes adjacent to cold walls or in unheated spaces. Insulate and tape them if necessary to be sure they can't freeze up. Keeping the water moving at all times will reduce the likelihood of freezing. See Section 3 for glycol instructions.

3. If there is considerable foreign matter in the boiler water, the boiler should be shut down and allowed to cool, then drained and thoroughly flushed out. Use the drain valve at the bottom of the return connection to drain the boiler. Pipe the drain cock to a suitable drain or containment device if a glycol solution is used. Flush the system to remove remaining matter. See Section 1 - Preinstallation for boiler water treatment requirements. If there is evidence that hard scale has formed on the internal surfaces, the boiler should be cleaned by chemical means as prescribed by a qualified water treatment specialist.

4. There must not be signs of continuous wetness at the chimney. If signs of continuous wetness are observed, a qualified service agency must be consulted to modify the vent configuration to prevent the formation of condensate.

B. DAILY (WITH BOILER IN USE)

Daily boiler observation can be performed by the owner. If any potential problems are found, a qualified installer or service technician/agency must be notified.

1. Remove any combustible materials, gasoline and other flammable liquids and substances that generate flammable vapors from the area where the boiler is contained. Make certain that the boiler area has ample air for combustion and ventilation and that there are no obstructions to the free flow of air to and from the boiler.

2. Observe general boiler conditions (unusual noises, vibrations, etc.)

3. Observe operating temperature and pressure on the combination gauge located on the left side of the boiler. Boiler pressure should never be higher than 5 psi (35 kPa) below the rating shown on the safety relief valve; 25 psig (172 kPa) maximum for a 30 psig (207 kPa) rating, 45 psig (310 kPa) maximum for a 50 psig (345 kPa) rating). The valve rating can be found on the top of the safety relief valve (see Figure 5 for location of the safety relief valve). Boiler temperature should never be higher than 250°F (121°C).

4. Check for water leaks in boiler and system piping.

5. Smell around the appliance area for gas. If you smell gas, follow the procedure listed in the Lighting/Operating Instructions in Section 7.

C. WEEKLY (WITH BOILER IN USE)

1. Flush float-type low-water cut-off (if used) to remove sediment from the float bowl as stated in the manufacturer's instructions.

D. MONTHLY (WITH BOILER IN USE)

1. Check boiler room floor drains for proper functioning.

2. Check function of the safety relief valve (monthly unless specified otherwise by manufacturer) by performing the following test:
   a. Check valve piping to determine that it is properly installed and supported.
   b. Check boiler operating temperature and pressure.
   c. Lift the try lever on the safety relief valve to the full open position and hold it for at least five seconds or until clean water is discharged.
   d. Release the try lever and allow the valve to close. If the valve leaks, operate the lever two or three times to clear the valve seat of foreign matter. It may take some time to determine if the valve has shut completely.
   e. If the valve continues to leak, it must be replaced before the boiler is returned to operation.
   f. Check that operating pressure and temperature have returned to normal.
   g. Check again to confirm that valve has closed completely and is not leaking.

3. Test low-water cut-off (if used) as described by the manufacturer.

4. Test limit as described in Section 7E, "Check-Out Procedure."

5. Test function of gas safety shut-off features as described by gas valve and ignition control manufacturer.

6. Cycle the boiler at least once and check operation of the vent damper.

E. ANNUALLY (BEFORE START OF HEATING SEASON)

⚠ DANGER

When servicing or replacing components, be absolutely certain that the following conditions are met:

- **Water, gas and electricity are off.**
- **The boiler is at room temperature.**
- **There is no pressure in the boiler.**

1. Check flueways and burners for cleanliness and clean if necessary. Use the following procedure if cleaning is required:
   a. Refer to the Lighting/Operating Instructions in Figure 7.3 to properly turn off the gas to the boiler.
   b. Turn off all electrical power to the boiler.
   c. Remove burners and brush orifice spuds lightly using a soft bristle brush.
   d. Remove the vent pipe, vent damper, top jacket panels and flue collector/draft diverter. Remove baffles on MIHII™ models.
   e. Brush flueways with wire brush.
   f. To the extent possible, inspect inside of vent pipe and vent damper for obstructions in flow or vent damper movement. Remove or replace as necessary.
   g. Re-install baffles on MIHII™ models. When replacing the flue collector/draft hood, be certain that the blanket seal between the flue collector and top section makes a tight seal to prevent leakage of the products of combustion.
   h. Re-install the top of the jacket, vent damper and vent pipe.
   i. Re-install burners.
2. Inspect entire venting system for corrosion, support and joint integrity. Repair as necessary.
3. Check the pilot and main burner flame. See Figure 9.1. The pilot should provide a steady flame enveloping 3/8″ to 1/2″ (1 cm to 1.2 cm) of the flame sensor. If required, adjust the pilot as stated in the gas valve manufacturer's instructions. The main burner flame inner cone should be approximately 1-1/2″ (4 cm) high and should have a very sharp, blue color characteristic.

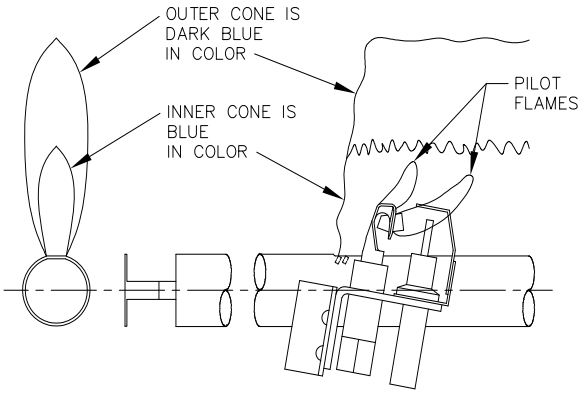

Figure 9.1: Intermittent Pilot and Main Burner Flame

10. BOILER DIMENSIONS & RATINGS

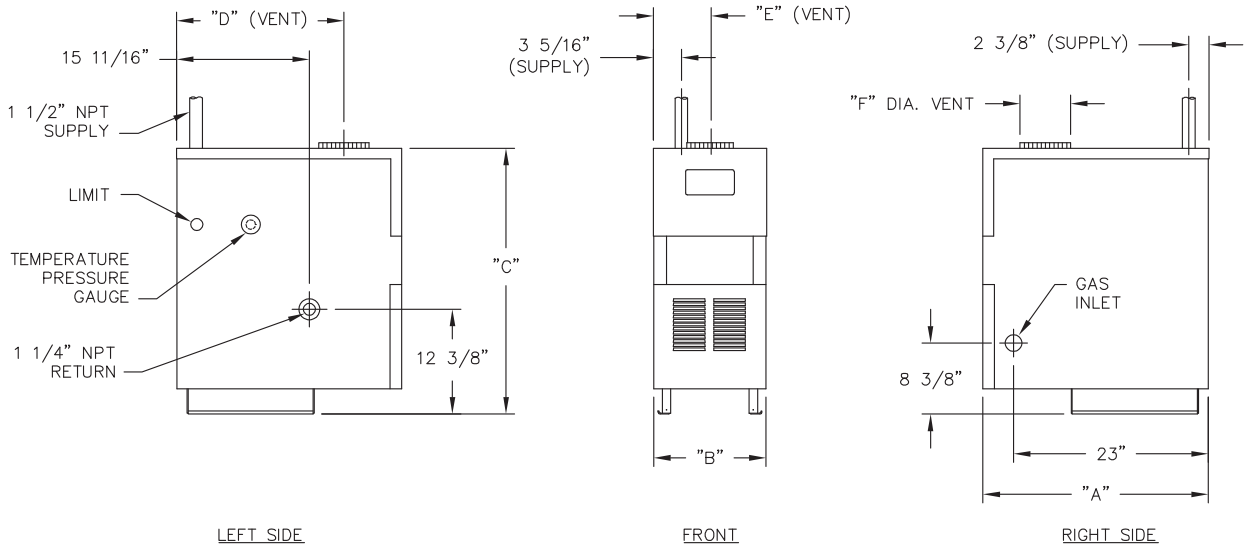

Figure 10.1: Boiler Views

Table 10.1: Series MI/MIH II™ Boiler Dimensions

SERIES MI/MIH II™ BOILER DIMENSIONS												
Boiler Model Number	Jacket						Rear of Jacket to c/l of Vent "D"		Left of Jacket to c/l of Vent "E"		Vent Size Diameter "F"	
	Length (Depth) "A"		Width "B"		Height "C"							
	inch	mm	inch	mm	inch	mm	inch	mm	inch	mm	inch	mm
MI/MIH II-03	26-5/8	676	12-1/2	318	31-3/8	797	20-13/16	529	6-1/4	159	5	127
MI/MIH II-04	26-5/8	676	15-7/8	403	31-3/8	797	20-13/16	529	7-11/16	195	5	127
MI/MIH II-05	26-5/8	676	19-1/4	489	31-3/8	797	21-13/16	554	9-5/8	244	6	152
MI/MIH II-06	26-5/8	676	22-5/8	575	31-3/8	797	21-13/16	554	11-5/16	287	6	152
MI-07	26-5/8	676	26	660	31-3/8	797	21-13/16	554	13	330	7	178
MI-08	29-5/8	752	29-3/8	746	31-3/8	797	23-5/16	592	14-11/16	373	8	203
MI-09	29-5/8	752	32-3/4	832	31-3/8	797	24-5/16	618	16-3/8	416	8	203

Table 10.2: Series MI/MIH II™ Boiler Ratings

SERIES MI/MIH II™ BOILER RATINGS																
Series MI/MIH II™ AHRI CERTIFIED www.ahridirectory.org																
Boiler Model Number	Input				Heating Capacity[3]				Net Ratings Water[1,2]				AFUE[3], %		Water Content	
	MBH		kW		MBH		kW		MBH		kW					
	MI	MIH II	MI	MIH II	MI	MIH II	MI	MIH II	MI	MIH II	MI	MIH II	MI	MIH II	Gallon	Liter
MI/MIH II-03	70	65	21	19	58	55	17	16	50	48	15	14	82.2	84.1	4.72	17.87
MI/MIH II-04	105	97.5	31	29	86	82	25	24	75	71	22	21	82.1	84.1	6.00	22.71
MI/MIH II-05	140	130	41	38	115	110	34	32	100	96	29	28	82.0	84.0	7.28	27.55
MI/MIH II-06	175	162.5	51	48	143	137	42	40	124	119	36	35	82.0	84.0	8.56	32.40
MI-07	195	N/A	57	N/A	160	N/A	47	N/A	139	N/A	41	N/A	82.0	N/A	9.84	37.24
MI-08	227.5	N/A	67	N/A	186	N/A	55	N/A	162	N/A	47	N/A	82.0	N/A	11.12	42.09
MI-09	260	N/A	76	N/A	211	N/A	62	N/A	183	N/A	54	N/A	82.0	N/A	12.40	46.93

1 Net water ratings based on an allowance of 1.15.

2 Consult factory before selecting a boiler for installations having unusual piping and pickup requirements, such as intermittent system operation, extensive piping systems, etc.

3 Heating Capacity and Annual Fuel Utilization Efficiency (AFUE) ratings are based on U.S. Government test.

11. REPAIR PARTS

REPAIR PARTS
SERIES MI/MIH II™ GAS BOILER

Repair parts are available from your local PB Heat, LLC distributor or from Parts To Your Door at 1 (610) 916-5380 (www.partstoyourdoor.com).

Note: Remember to include the boiler model number and serial number when ordering parts.

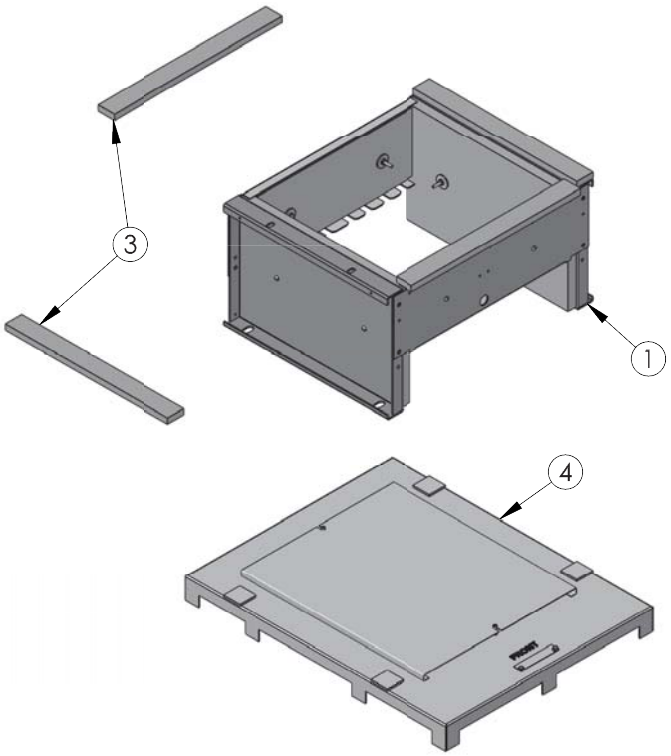

Figure 11.1: Base/Combustible Floor Pan

Table 11.1: Base/Combustible Floor Pan

	Description	Quantity Required	Stock Code
1	Base Assembly – MI-03	–	7800
	Base Assembly – MI-04	–	7801
	Base Assembly – MI-05	–	7802
	Base Assembly – MI-06	–	7803
	Base Assembly – MI-07	–	7804
	Base Assembly – MI-08	–	7805
	Base Assembly – MI-09	–	7806
3	Base Blanket Seal	–	50867
4	Combustible Floor Pan Assembly – MI-03	–	90700
	Combustible Floor Pan Assembly – MI-04	–	90701
	Combustible Floor Pan Assembly – MI-05	–	90702
	Combustible Floor Pan Assembly – MI-06	–	90703
	Combustible Floor Pan Assembly – MI-07	–	90704
	Combustible Floor Pan Assembly – MI-08	–	90705
	Combustible Floor Pan Assembly – MI-09	–	90706

Part numbers may be subject to change without notice.

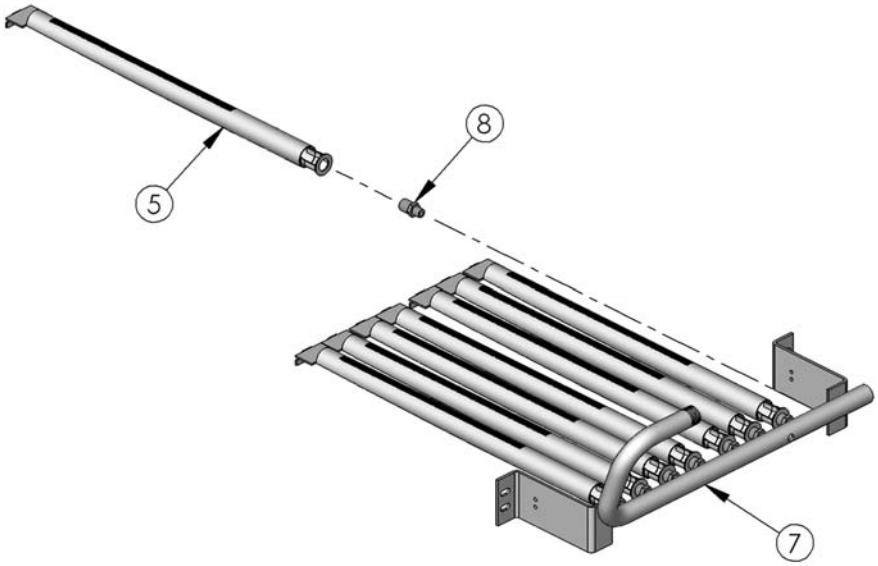

Figure 11.2: Manifold

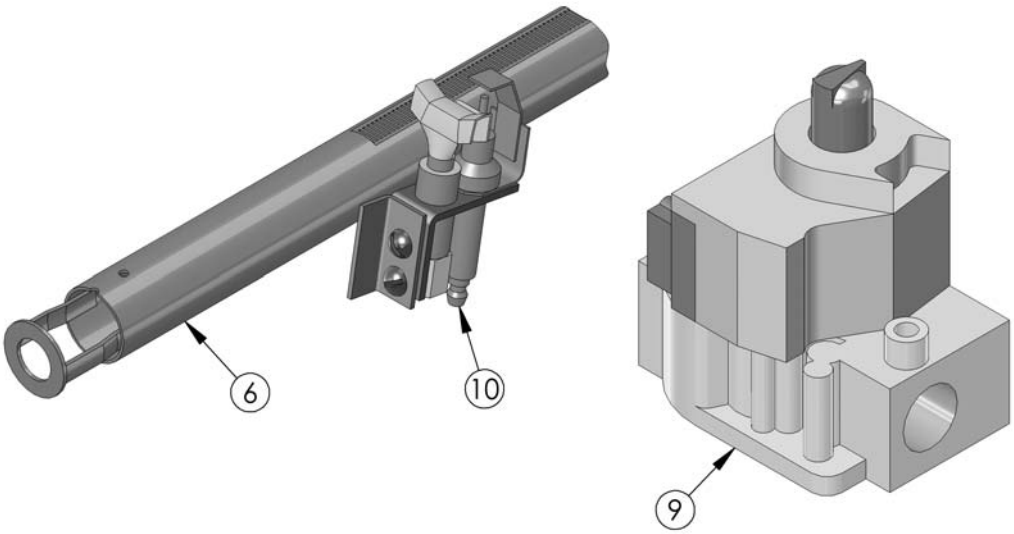

Figure 11.3: Gas Valve and Pilot (Intermittent Ignition)

Table 11.2: Manifold, Gas Valve and Pilot

	Description	Quantity Required	Stock Code
5	Steel Burner – MI-03	3	51537
	Steel Burner – MI-04	5	51537
	Steel Burner – MI-05	7	51537
	Steel Burner – MI-06	9	51537
	Steel Burner – MI-07	11	51537
	Steel Burner – MI-08	13	51537
	Steel Burner – MI-09	15	51537
6	Steel Burner w/ Spark & SV Pilot Bracket	1	51539
7	Gas Manifold – MI-03	–	50978
	Gas Manifold – MI-04	–	50979
	Gas Manifold – MI-05	–	50980
	Gas Manifold – MI-06	–	50981
	Gas Manifold – MI-07	–	50954
	Gas Manifold – MI-08	–	50955
	Gas Manifold – MI-09	–	50956
8	Orifice Spud, #48 Natural Gas – MI-03	4	50894
	Orifice Spud, #48 Natural Gas – MI-04	6	50894
	Orifice Spud, #48 Natural Gas – MI-05	8	50894
	Orifice Spud, #48 Natural Gas – MI-06	10	50894
	Orifice Spud, #49 Natural Gas – MI-07	12	50895
	Orifice Spud, #49 Natural Gas – MI-08	14	50895
	Orifice Spud, #49 Natural Gas – MI-09	16	50895
	Orifice Spud, #56 LP Gas – MI-03	4	50899
	Orifice Spud, #56 LP Gas – MI-04	6	50899
	Orifice Spud, #56 LP Gas – MI-05	8	50899
	Orifice Spud, #56 LP Gas – MI-06	10	50899
	Orifice Spud, #57 LP Gas – MI-07	12	50900
	Orifice Spud, #57 LP Gas – MI-08	14	50900
	Orifice Spud, #57 LP Gas – MI-09	16	50900
9	Honeywell VR8204A-2001 Gas Valve Spark – Natural Gas MI-03 thru MI-05	–	50583
	Honeywell VR8304M-4002 Gas Valve Spark – Natural Gas MI-06 thru MI-09	–	50589
	Honeywell VR8204A-2103 Gas Valve Spark – LP MI-03 thru MI-05	–	50584
	Honeywell VR8304M-4010 Gas Valve Spark – LP MI-06 thru MI-09	–	50590
10	Honeywell Q3481B-1644 Spark Pilot – Natural Gas MI-03 thru MI-09	–	50996
	Honeywell Q3481B-1529 Spark Pilot – LP MI-03 thru MI-09	–	50997

Part numbers may be subject to change without notice.

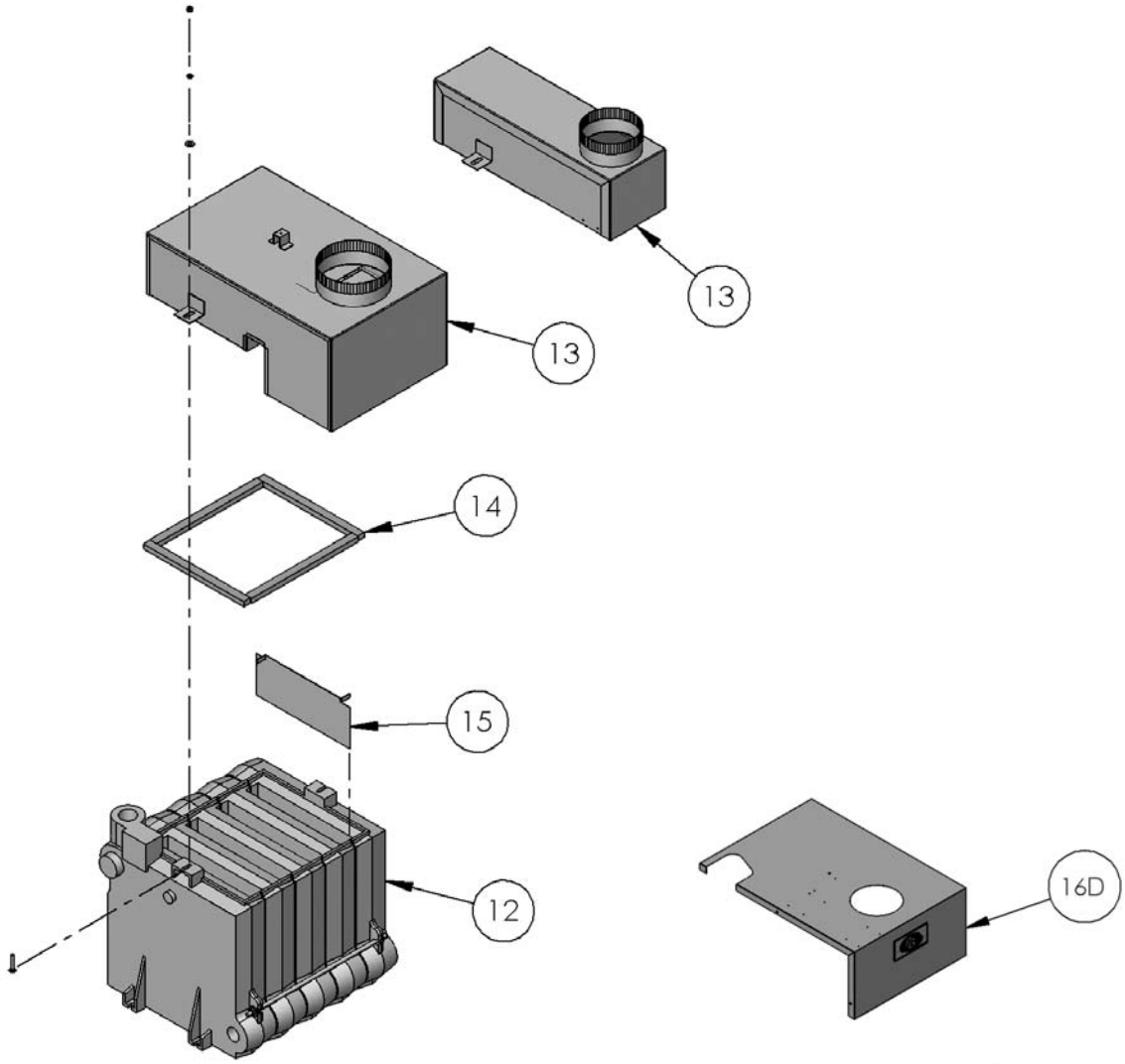

Figure 11.4: Block/Draft Hood

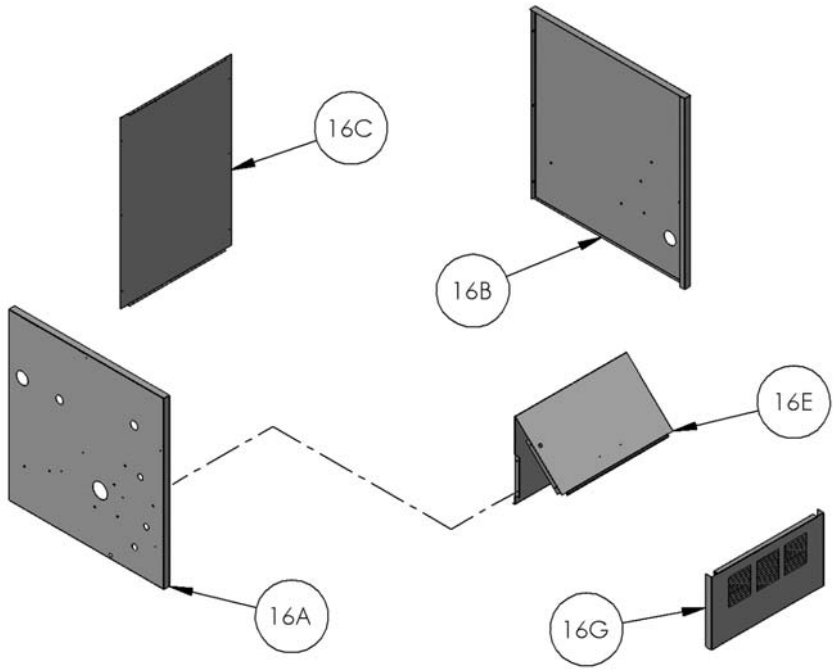

Figure 11.5: Jacket

Table 11.3: Block/Draft Hood & Jacket

	Description	Quantity Required	Stock Code
12	Block Assembly – MI-03	–	90419
	Block Assembly – MI-04	–	90420
	Block Assembly – MI-05	–	90421
	Block Assembly – MI-06	–	90422
	Block Assembly – MI-07	–	90423
	Block Assembly – MI-08	–	90424
	Block Assembly – MI-09	–	90425
13	Flue Collector/Draft Hood – MI-03	–	90510
	Flue Collector/Draft Hood – MI-04	–	90511
	Flue Collector/Draft Hood – MI-05	–	90512
	Flue Collector/Draft Hood – MI-06	–	90513
	Flue Collector/Draft Hood – MI-07	–	90514
	Flue Collector/Draft Hood – MI-08	–	90515
	Flue Collector/Draft Hood – MI-09	–	90516
14	Flue Collector Blanket Seal (specify length needed)	–	50866
15	Flue Baffles – MIHII Only – MIHII-03	2	51608
	Flue Baffles – MIHII Only – MIHII-04	3	51608
	Flue Baffles – MIHII Only – MIHII-05	4	51608
	Flue Baffles – MIHII Only – MIHII-06	5	51608
16	Jacket Assembly (Complete Jacket*) – MI-03	–	90445
	Jacket Assembly (Complete Jacket*) – MI-04	–	90446
	Jacket Assembly (Complete Jacket*) – MI-05	–	90447
	Jacket Assembly (Complete Jacket*) – MI-06	–	90448
	Jacket Assembly (Complete Jacket*) – MI-07	–	90449
	Jacket Assembly (Complete Jacket*) – MI-08	–	90450
	Jacket Assembly (Complete Jacket*) – MI-09	–	90451
	*Complete Jacket Consists of:		
16A	Left Side Panel		
16B	Right Side Panel		
16C	Rear Panel		
16D	Top Upper Front Panel		
16E	Inner Front Baffle Panel		
16G	Removable Front Panel		

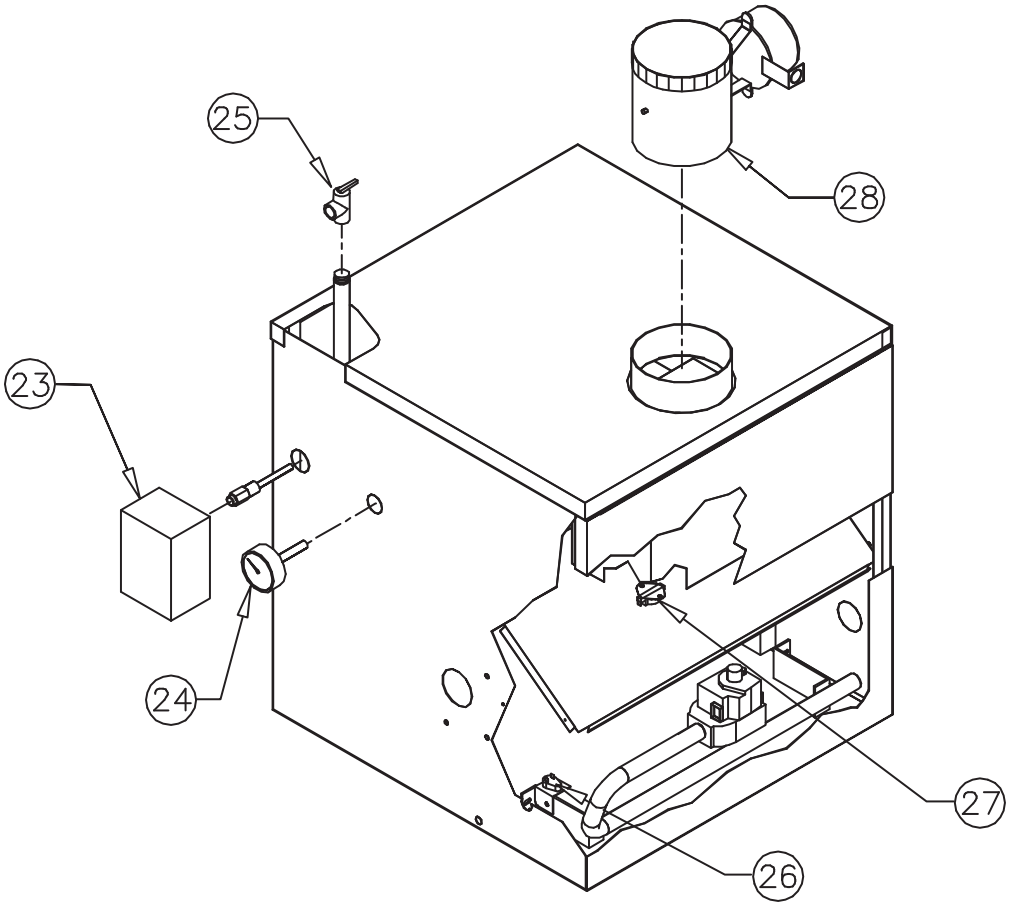

Figure 11.6: Controls/Circulator/Vent Damper

Table 11.4: Controls/Circulator/Vent Damper

	Description	Quantity Required	Stock Code
23	Limit Beckett 7600B	–	50335
	Well Beckett 7600TW03B	–	50341
	Sensor Beckett 7600P06B	–	50339
	Limit w/ Sensor Hydrolevel 3200	–	50334
	Well Hydrolevel 48-201	–	50723
24	Temperature-Pressure Gauge	–	51324
25	Safety Relief Valve, 30 PSI, Conbraco 10-408-05	–	50501
	Safety Relief Valve, 50 PSI, Watts #350	–	99950
26	Flame Roll-Out Safety Shut-Off Switch	–	51587
27	Blocked Vent Shut-Off (Spill) Switch – MI Only	–	90592
	Blocked Vent Shut-Off (Spill) Switch – MIHII Only	–	90593
28	Vent Damper – MI-03, MI-04	1	90612
	Vent Damper – MI-05, MI-06	1	90613
	Vent Damper – MI-07	1	90614
	Vent Damper – MI-08, MI-09	1	90615

NOTES

Series MI/MIH II™

Gas Boilers

Installation, Operation & Maintenance Manual

TO THE INSTALLER:

This manual is the property of the owner and must be affixed near the boiler for future reference.

TO THE OWNER:

This boiler should be inspected annually by a Qualified Service Agency.

PeerlessBoilers.com

PB HEAT, LLC
131 S. CHURCH STREET • BALLY, PA 19503

©2018 PB Heat, LLC. All rights reserved.

MI8038 R17 (8/18-1M)
Printed in U.S.A.