Installation & Maintenance Manual

CHALLENGER COMBI

CC105, CC125, CC125H

WARNING

If the information in this manual is not followed exactly, a fire or explosion may result causing property damage, personal injury, or death.

FOR YOUR SAFETY

- **Do not store or use gasoline or other flammable vapors and liquids in the vicinity of this or any other appliance.**
- **WHAT TO DO IF YOU SMELL GAS**
  - **Do not try to light any appliance**
  - **Do not touch any electrical switch; do not use any phone in your building.**
  - **Immediately call your gas supplier from a neighbor's phone. Follow the gas supplier's instructions.**
  - **If you cannot reach your gas supplier, call the fire department.**
- **Installation and service must be performed by a qualified installer, service agency or the gas supplier.**

Table of Contents

Section I: Product & Safety Information 1
1.1 Definitions 1
1.2 Safety Information 1
1.3 Qualified Installer 1
1.4 Homeowner 1
1.5 Warranty 3
Section II: Pre-Installation Items 4
2.1 Code Compliance 4
2.2 Determining Product Location 4
2.3 Boiler and/or Water Heater Replacement 4
2.4 Clearances 5
2.5 Residential Garage Installations 5
2.6 Boiler Freeze Protection Feature 5
Section III: Combustion Air & Venting 6
3.1 Combustion Air Contamination 6
3.2 Ventilation Air Requirements 6
3.3 Combustion Air and Vent Piping 7
3.4 Removal of an Existing Boiler and/or Water Heater from a Common Vent System 7
3.5 Commonwealth of Massachusetts Installations Only 8
Section IV: Appliance Preparations 9
4.1 Shipping & Handling Instructions 9
4.2 Wall Mounting Installation 9
4.3 Wall Mounting Guidelines 9
4.4 Stud Wall Installation 10
4.5 Solid Wall Installation 10
4.6 Appliance Mounting 10
4.7 Piping Support Bracket 10
Section V: Boiler Piping 11
5.1 General Piping Requirements 11
5.2 Pressure Relief Valve (PRV) 11
5.3 Low Water Cut Off / CH Pressure Sensor 11
5.4 Additional Limit Control 11
5.5 Backflow Preventer 11
5.6 Boiler System Piping Applications 11
5.7 Expansion Tank and Makeup Water 13
5.8 Central Heating (CH) Water Circulator 13
5.9 Sizing Primary Piping 13
5.10 System Piping - Zone Circulators 13
5.11 System Piping - Zone Valves 13
5.12 System Piping - Radiant Heating 13
5.13 System Piping - Indirect Fire Water Heater 13
5.14 System Piping - Special Application 14

Section VI: Domestic Piping 16
6.1 General Notes 16
6.2 Operating Restrictions 16
6.3 Pressure Relief Valve - Standard Installations 17
6.4 Temperature & Pressure (T&O) Relief Valve - Storage Tank or SMART/COMFORT Installations 17
6.5 Drain Valves 18
6.6 Thermal Expansion 18
6.7 Water Hammer 18
6.8 Vacuum Breaker - Strage Tank or SMART/COMFORT Installations 18
6.9 General Piping Requirements 18
6.10 Thermostatic Mixing Valve 18
6.11 Recirculation Piping 19
6.12 Storage Tank Installation 19
6.13 Setting the Termostatic Mixing Valve 19
Section VII: Installing Vent / Combustion Air & Condensation Drain 22
7.1 Installing Vent & Combustion Air 22
7.2 Installing Condensate Drain Assembly 22
Section VIII: Gas Piping 23
8.1 Gas Supply Piping Connection 23
8.2 Natural Gas 24
8.3 Propane Gas 25
Section IX: Internal Wiring 26
9.1 General Requirements 26
Section X: External Wiring 27
10.1 Installation Compliance 27
10.2 Line Voltage Connections 27
10.3 Circulator Maximum Current Rating 27
10.4 Central Heating (CH) Circulator 27
10.5 DHW Circulator for Optional SMART/COMFORT I.F.W.H 27
10.6 System Circulator - Zone Valve Application 27
10.7 Low Voltage Connections 27
10.8 Thermostat (Dry Contact) Wiring 28
10.9 Outdoor Temperature Sensor Wiring 28
10.10 SMART/COMFORT Aquastat Wiring 28
Section XI: Startup Preparation 31
11.1 Check Boiler System Water Chemistry 31
11.2 Flush Boiler System to Remove Sediment 31
11.3 Use of Antifreeze in the Boiler System 31
11.4 Filling the Boiler System 31
11.5 Check Low Water Cut Off 32
11.6 Check for Gas Leaks 32
11.7 Check Thermostat Circuit 32

11.8 Inspect Condensate Drain Assembly 32
Section XII: Startup Procedures 33
12.1 Final Checks Before Startup 33
12.2 CHALLENGER Startup 33
12.3 CHALLENGER Startup Troubleshooting 33
12.4 Check the CHALLENGER and System 33
12.5 Appliance ON/OFF 34
12.6 Set Boiler Maximum Central Heating (CH) Set Point Temperature 34
12.7 Operation Verification - Space Heating 34
12.8 DHW Set Point Temperature 36
12.9 Operation Verification - Domestic Hot Water (If Applicable) 36
12.10 Control Display 37
12.11 Setting the Appliance Parameters 39
12.12 Error Mode 40
12.13 Fluctuating DHW Temperature 40
12.14 Error Codes 41
12.15 Warning Codes 41
Section XIII: Outdoor Reset Control 42
13.1 Mounting the Sensor 42
13.2 Wiring the Sensor 42
13.3 Adjusting Outdoor Reset Curve 42
13.4 Changing Outdoor Reset Parameters 43
Section XIV: Checkout Procedures 44
Section XV: Installation Record 45
Section XVI: Maintenance Schedule 46
16.1 Service Technician 46
16.2 Owner Maintenance 46
Section XVII: Maintenance Procedures 47
17.1 Annual Maintenance Procedures 47
17.2 Reported Problems 47
17.3 Check Surrounding Area 47
17.4 Inspect Burner Area 47
17.5 Check System Piping 47
17.6 Clean Condensate Drain Assembly 47
17.7 Check Ventilation Air Openings 47
17.8 Inspect Vent and Combustion Air Piping 47
17.9 Check Boiler System 47
17.10 Removing Internal Flue and Condensate Pan for Inspection 48
17.11 Check Expansion Tank 48
17.12 Check Relief Valve 48

17.13 Inspection of Igniter 48
17.14 Check Ignition Wiring and Ground Wiring 48
17.15 Check Control Wiring 48
17.16 Check Control Settings 51
17.17 Perform Startup and Checkout Procedures 51
17.18 Check Burner Flame 51
17.19 Check Combustion Levels 51
17.20 Clean Boiler Heat Exchanger 51
17.21 Clean Domestic Heat Exchanger 52
17.22 Review With Owner 52
Section XVIII: Replacement Parts 54
18.1 Internal Components 54
18.2 Front Door 55
18.3 Vent Components 56
18.4 Heat Exchanger Components 57
18.5 Blower & Gas Valve Components 58
18.6 Burner Components 59
18.7 Control Components 60
Section XIX: Dimensions & Connections 61
Section XX: Domestic Specifications 62
20.1 Performance Ratings 62
20.2 Domestic Flow 63
Section XXI: Boiler Specifications 64
21.1 Performance Ratings 64
21.2 CC105 Pressure Loss Curves 65
21.3 CC125 & CC125H Pressure Loss Curves 66
Section XIX: Notes 67

Section I: Product & Safety Information

1.1 Definitions

The following terms are used throughout this manual to bring attention to the presence of potential hazards or important information concerning the product.

DANGER

Indicates the presence of a hazardous situation which, if ignored, will result in substantial property damage, serious injury, or death.

WARNING

Indicates a potentially hazardous situation which, if ignored, can result in substantial property damage, serious injury, or death.

CAUTION

Indicates a potentially hazardous situation which, if ignored, can result in minor property damage or injury.

NOTICE

Indicates special instructions on installation, operation, or maintenance, which are important to equipment but not related to personal injury hazards.

BEST PRACTICE

Indicates recommendations made by ACV-Triangle Tube for the installers which will help to ensure optimum operation and longevity of the equipment.

1.2 Safety Information

DANGER

Do not use this appliance if any part has been under water. Immediately call a qualified service technician to inspect the boiler and to replace any part of the control system and any gas control which has been under water.

WARNING

WHAT TO DO IF YOU SMELL GAS:

- **Do not try to light any appliance**
- **Do not touch any electrical switch; do not use any phone in your building**
- **Immediately call your gas supplier from a neighbor's phone. Follow the gas supplier's instructions.**
- **If you cannot reach your gas supplier, call the fire department.**

Installation and service must be performed by a qualified installer, service agency or the gas supplier.

WARNING

Should overheating occur or the gas supply fails to shut off, turn OFF the manual gas control valve external to the appliance.

WARNING

DO NOT add cold make up water when the appliance is hot. Thermal shock can potentially cause cracks in the heat exchanger.

CAUTION

When servicing the appliance, avoid electrical shock by disconnecting the electrical supply prior to performing maintenance.

WARNING

1.3 Qualified Installer

Prior to installing this product, read all instructions included in this manual and all accompanying manuals/documents with this appliance. Perform all installation steps required in these manuals in the proper order given. Failure to adhere to the guidelines within these manuals can result in substantial property damage, serious injury, or death.

1.4 Homeowner

- This product should be maintained, serviced, and inspected annually by a qualified service technician.
- This manual is intended for use by a qualified installer/service technician.

NOTICE

Please reference the appliance model number and the serial number from the rating label, on the right panel, when inquiring about service or troubleshooting.

NOTICE

ACV-Triangle Tube reserves the right to modify the technical specifications and components of its products without prior notice.

WARNING

ACV-Triangle Tube accepts no liability for any damage, injury, or loss of life resulting from incorrect installation, alteration of any factory supplied parts, or the use of parts or fittings not specified by ACV-Triangle Tube. If there is a conflict or doubt about the proper installation of the appliance or any factory supplied replacement parts, please contact the ACV-Triangle Tube Technical Support Department.

WARNING

A byproduct of any gas fired appliance (stove, fire place, clothes dryer, water heater, furnace, boiler, etc.) is carbon monoxide. In the absence of any state or local codes requiring installation of carbon monoxide detectors and alarms, ACV-Triangle Tube's recommendation is to follow the requirements of the Commonwealth of Massachusetts in Section 3.5.

DANGER

Bacteria can develop in the domestic water system if certain minimum water temperatures are not maintained.

DANGER

Protection must be taken against excessive pressure.

TO PROTECT AGAINST EXCESSIVE WATER HEATER TEMPERATURE AND PRESSURE:

- **Check if a 150 psi [10 bar] pressure relief valve (field supplied) is installed as recommended for standard domestic hot water installations or a temperature & pressure relief valve for storage tank or ACV-Triangle Tube SMART/COMFORT Indirect Fired Water Heater (I.F.W.H) installations.**
- **Check if the 30 psi [2 bar] pressure relief valve supplied is installed in the recommended location for heating applications.**
- **To avoid injury, install the relief devices to comply with local code requirements.**

DANGER

HOT WATER CAN SCALD!

Water temperature over 125°F [52°C] can cause severe burns instantly or death from scalds.

- **Children, disabled and elderly are at highest risk of being scalded.**
  - **Never leave them unattended in or near shower, bathtub or sink.**
  - **Never allow small children to use a hot water faucet or draw their own bath.**

- **To avoid any potential scald hazard or if codes require specific water temperatures at the hot water faucet, the installer must:**
  - **Install the factory supplied thermostatic mixing valve at this appliance and ensure it is working properly and**
  - **Set the thermostatic mixing valve to the lowest temperature which satisfies your hot water needs.**
  - **Feel and adjust water temperature before bathing or showering.**
  - **Water drained from the system drain valves may be extremely hot.**

TO AVOID INJURY
- Make sure all connections are tight.
- Direct water flow away from any person.

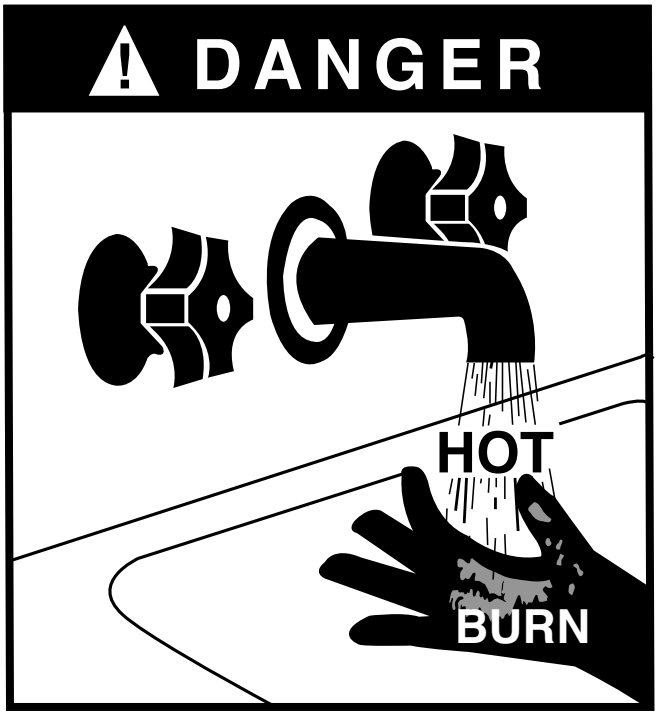

1.5 Warranty

NOTICE

Warranty Registration Card must be filled out by the customer and mailed within thirty (30) days of installation in order to gain warranty coverage.

NOTICE

When receiving the CHALLENGER, any claims for damage or shortage in shipment must be filed immediately against the transportation company by the consignee.

NOTICE

Leave all documentation received with the appliance with the owner for future reference.

Section II: Pre-Installation Items

2.1 Code Compliance

The CHALLENGER is certified to the Boiler Standard (ANSI Z21.13/CSA 4.9) and the Water Heater Standard (ANSI Z21.10/CSA 4.3).

Due to the CHALLENGER's unique heat exchanger design which incorporates two independent copper water tube coils; one for space heating and the other for domestic hot water, the CHALLENGER can be installed as a Boiler, Water Heater, or both. The unused system does not have to be connected or filled. Parameter 1 (Installation Type) will need to be set accordingly (0 = Heat and DHW, 2 = DHW only and 3 = Heat only). See Setting the Appliance Parameters, Section 12.11.

This appliance must be installed in accordance with the latest edition of following:

- All applicable local, state, national, and provincial codes, ordinances, regulations, and laws.
- For installations in Massachusetts, code requires the appliance to be installed by a licensed plumber or gas fitter, and if antifreeze is utilized, the installation of a reduced pressure backflow preventer device is required in the boiler's cold water fill or make up water supply line.
- For installations in Massachusetts, all direct vented appliances must comply with the guidelines outlined in Section 3.5.
- Massachusetts Plumbing Board Product Approval Code # is CI-0111-219 for the CHALLENGER.
- The National Fuel Gas Code (NFPA 54/ANSI Z223.1).
- National Electric Code (ANSI/NFPA 70).
- For installations in Canada - Installation Code for Gas Burning Equipment (CAN/CSA B149.1) & Canadian Electrical Code Part 1 (CSA C22.1).
- Standards for Controls and Safety Devices for Automatically Fired Boilers (ANSI/ASME CSD-1) when required.

NOTICE

The CHALLENGER gas manifold and gas controls meet the safe lighting and other performance requirements as specified in ANSI Z21.13.

2.2 Determining Product Location

Before locating the CHALLENGER, check for convenient locations to:

- Heating system piping
- Domestic water supply piping
- Venting
- Gas supply piping
- Electrical service

Ensure the appliance location allows the combustion air and vent piping to be routed directly through the building and terminate properly in the same pressure zone outside with a minimum amount of length and bends.

Ensure the area chosen for the installation of the CHALLENGER is free of any combustible materials, gasoline or other flammable liquids.

WARNING

Failure to remove or maintain the area free of combustible materials, gasoline, or other flammable liquids or vapors can result in substantial property damage, serious injury, or death.

Ensure the CHALLENGER and its controls are protected from dripping or spraying water during normal operation or service.

The CHALLENGER should be installed in a location so that any water leaking from the appliance, piping connections or relief valve will not cause damage to the surrounding area or any lower floors in the structure. When such a location cannot be avoided, it is recommended that a suitable drain pan, adequately drained, be installed under the appliance. The pan must not restrict combustion air flow.

2.3 Boiler and/or Water Heater Replacement

If the CHALLENGER is replacing an existing boiler and/or water heater, the following items should be checked and corrected prior to installation:

- Boiler and domestic piping leaks and corrosion.
- Proper location and sizing of the expansion tank on the boiler heating loop. Proper location and sizing of the thermal expansion tank (if used) on the domestic supply line.
- Vent condition.
- Amount and quality of propylene glycol, if applicable.

2.4 Clearances

The CHALLENGER is approved for the following clearance to combustibles:

- Top panel - 12 inches [30.5 cm]
- Front - 0 inches
- Bottom panel - 12 inches [30.5 cm]
- Rear - 0 inches
- Right side - 4 inches [10.2 cm]
- Left side - 1.5 inches [3.8 cm]
- Boiler Piping - 0.25 inches [0.6 cm]
- Reference the appropriate vent supplement for venting clearance requirements.

BEST PRACTICE

It is recommended that the following clearances be maintained for serviceability:

Top Panel:	**24 in [61 cm]**
Front:	**24 in [61 cm]**
Bottom Panel:	**24 in [61 cm]**
Rear:	**0 in [0 cm]**
Sides:	**6 in [15.2 cm]**

NOTICE

When maintaining the approved clearance but less than recommended service clearances, some product labeling may become hidden and unreadable.

WARNING

If the enclosure in which the appliance is installed is less than 45 cubic feet [1.3 m3], the space must be ventilated. See Ventilation Air Requirements, Section 3.2 for guidelines and requirements.

WARNING

When installing the CHALLENGER in a confined space, sufficient air must be provided to allow, under normal operating conditions, proper air flow around the product to maintain ambient temperatures within safe limits to comply with the National Fuel Gas Code (NFPA 54/ANSI Z223.1)

2.5 Residential Garage Installations

When installing the CHALLENGER in a residential garage, the following special precautions per NFPA 54/ANSI Z223.1 must be taken:

- Mount the appliance a minimum 18 inches [458 mm] above the floor level of the garage. Ensure the burner and ignition devices / controls are no less than 18 inches [458 mm] above the floor level.
- Locate or protect the appliance in a manner so it cannot be damaged by a moving vehicle.

2.6 Boiler Freeze Protection Feature

The boiler control has a freeze protection feature. This feature monitors the boiler supply water temperature and responds as follows when no call for heat is present:

- 42°F [6°C] Boiler Circulator and Burner are ON.
- 50°F [10°] Boiler Circulator and Burner are OFF.

CAUTION

The boiler freeze protection feature is disabled during a hard lockout. The burner will not fire, but the CH circulator will operate.

CAUTION

The boiler freeze protection feature is designed to protect the boiler installed in a primary/secondary piping arrangement. See Section V for primary/secondary piping examples. See Section XI for antifreeze guidelines.

Section III: Combustion Air & Venting

3.1 Combustion Air Contamination

WARNING

If the CHALLENGER combustion air inlet is located in any area likely to cause or contain contamination, or if products which could contaminate the air cannot be removed, the combustion air must be repiped and terminated to another location. Contaminated combustion air will damage the appliance and the burner system and can result in substantial property damage, serious injury, or death.

WARNING

Do not operate a CHALLENGER if the combustion air inlet is located near a laundry room or pool facility. These areas will always contain hazardous contaminants.

Pool, laundry, common household, and hobby products often contain fluorine or chlorine compounds. When these chemicals pass through the burner and vent system, they can form strong acids. These acids can create corrosion of the heat exchanger, burner components, and vent system, causing serious damage and presenting a possible threat of flue gas spillage or water leakage into the surrounding area.

Please read the information listed below. If contaminating chemicals are located near the area of the combustion air inlet, the installer should pipe the combustion air inlet to an area free of these chemicals per SECTION V of this installation manual.

Potential contaminating products:

- Spray cans containing chloro/fluorocarbons
- Permanent Wave Solutions
- Chlorinated wax
- Chlorine - based swimming pool chemicals / cleaners
- Calcium Chloride used for thawing ice
- Sodium Chloride used for water softening
- Refrigerant leaks
- Paint or varnish removers
- Hydrochloric acid / muriatic acid
- Cements and glues
- Antistatic fabric softeners used in clothes dryers
- Chlorine-type bleaches, detergents, and cleaning solvents found in household laundry rooms
- Adhesives used to fasten building products and other similar products

Areas likely to contain these products

- Dry cleaning / laundry areas and establishments
- Beauty salons
- Metal fabrication shops
- Swimming pools and health spas
- Refrigeration repair shops
- Photo processing plants
- Auto body shops
- Plastic manufacturing plants
- Furniture refinishing areas and establishments
- New building construction
- Remodeling areas
- Garages with workshops

3.2 Ventilation Air Requirements

For installations involving only the CHALLENGER, in which the minimum service clearances are maintained as listed in Section 2.4, no ventilation openings are required.

For installations with less than the minimum service clerances involving only the CHALLENGER, the space/enclosure must provide two openings for ventilation. The openings must be sized to provide 1 square inch [6 square centimeters] of free area per 1,000 Btu/h [0.3 KW] of appliance input. The openings shall be placed 12 inches [30.5 cm] from the top of the space and 12 inches [30.5 cm] from the floor of the space.

For installations in which the CHALLENGER shares the space with air movers (exhaust fan, clothes dryers, fireplaces, etc.) and other combustion equipment (gas or oil) the space must be provided with adequate air openings to provide ventilation and combusion air to the equipment. To properly size the ventilation/combustion air openings, the installer must comply with the National Fuel Gas Code (NFPA 54/ANSI Z223.1) for installations in the U.S. or CAN/CSA B149.1 for installations in Canada.

WARNING

The space must be provided with ventilation / combustion air openings properly sized for all make-up air requirements (exhaust fans, clothes dryers, fireplaces, etc.) and the total input of all appliances located in the same space as the CHALLENGER. The input of a CHALLENGER which uses combustion air directly from the outside, is excluded thus additional free area for the openings is not required. Failure to provide or properly size the openings can result in severe personal injury, death or substantial property damage.

3.3 Combustion Air and Vent Piping

The CHALLENGER requires a Category IV venting system, which is designed for pressurized venting and condensate.

The CHALLENGER is certified as a Direct Vent (sealed combustion) appliance. A Direct Vent appliance utilizes uncontaminated outdoor air piped directly to the appliance for combustion.

NOTICE

Install combustion air and vent pipe as detailed in the CHALLENGER PVC, CPVC, and SS Vent Supplement included in the appliance installation envelope. Refer to instructions for parts list and method of installation.

NOTICE

Contact ACV-Triangle Tube for other venting options including PVC Concentric Vent/Air Termination Supplement or CHALLENGER Concentric Vent/Air System Supplement. Refer to these instructions for parts list and method of installation.

DANGER

Verify installed combustion air and vent piping are sealed gas tight and meet all provided instructions and applicable codes. Failure to comply will result in substantial property damage, serious injury, or death.

3.4 Removal of an Existing Boiler and/or Water Heater from a Common Vent System

BEST PRACTICE

When an existing boiler and/or water heater is removed from a common venting system, the common venting system is likely to be too large for proper venting of the remaining appliances. At the time of removal of an existing boiler, the following steps shall be followed with each appliance remaining connected to the common venting system place in operation, while the other appliances connected to the common venting system are not in operation.

1. Seal any unused openings in the common venting system.
2. Visually inspect the venting system for proper size and horizontal pitch and determine there is no blockage or restriction, leakage, corrosion, or other deficiencies which could cause an unsafe condition.
3. Insofar as is practical, close all exterior building doors and windows and all doors between the space in which the appliances remaining connected to the common venting system are located and other spaces of the building. Turn on clothes dryers and any appliance not connected to the common venting system. Turn on any exhaust fans, such as range hoods and bathroom exhausts, so they will operate at maximum speed. Do not operate a summer exhaust fan. Close fireplace dampers.
4. Place in operation the appliance being inspected. Follow the lighting instructions. Adjust thermostat so the appliance will operate continuously.
5. Test for spillage at the draft hood relief opening after 5 minutes of main burner operation. Use the flame of a match or candle, or smoke from a cigarette, cigar, or pipe.
6. After it has been determined that each appliance remaining connected to the common venting system properly vents when tested as outlined above, return doors, windows, exhaust fans, fireplace dampers, and any other gas-burning appliances to their previous condition of use.
7. Any improper operation of the common venting system should be corrected so the installation conforms with the National Fuel Gas Code (NFPA 54/ANSI Z223.1) and/or CAN/CSA B149.1. When resizing any portion of the common venting system, the common venting system should be resized to approach the minimum size as determined using the appropriate tables in Chapter 13 of the National Fuel Gas Code (NFPA 54/ANSI Z223.1) and/or CAN/CSA B149.1.

DANGER

Do not install the CHALLENGER into a common vent with other gas or oil appliances. This may cause flue gas spillage or appliance malfunction, which will result in substantial property damage, serious injury, or death.

3.5 Commonwealth of Massachusetts Installations Only

For direct-vent, mechanical-vent, or domestic hot water equipment and appliances where the bottom of the vent terminal and the air intake is installed below four feet above grade, the following requirements must be satisfied:

1. If there is not one already present on each floor level where there are bedrooms, a carbon monoxide detector and alarm shall be placed in the living area outside the bedrooms. The carbon monoxide detector shall comply with NFPA 720.
2. A carbon monoxide detector shall also be located in the room that houses the appliance or equipment and shall:
   a. Be powered by the same electrical circuit as the appliance or equipment such that only one service switch services both the appliance and the carbon monoxide detector;
   b. Have battery back-up power;
   c. Meet ANSI/UL 2034 Standards and comply with NFPA 720; and
   d. Have been approved and listed by a nationally recognized testing laboratory under 527 CMR.
3. A product-approved vent terminal must be used, and if applicable, a product-approved air intake must be used. Installation shall be in strict compliance with the manufacturer's instructions. A copy of the installation instructions shall remain with the appliance or equipment at the completion of the installation.
4. A metal or plastic identification plate shall be mounted on the exterior of the building, four feet directly above the location of the vent terminal. The plate shall be of sufficient size to be easily read from a distance of eight feet away and read "Gas Vent Directly Below".

NOTICE

Installer must provide tag identification plate and ensure the lettering meets code requirements.

For direct-vent, mechanical-vent, or domestic hot water equipment and appliances where the bottom of the vent terminal and the air intake are installed above four feet above grade, the following requirements must be satisfied:

1. If there is not one already present on each floor level where there are bedrooms, a carbon monoxide detector and alarm shall be placed in the living area outside the bedrooms. The carbon monoxide detector shall comply with NFPA 720.
2. A carbon monoxide detector shall also be located in the room that houses the appliance or equipment and shall:
   a. Be hard wired, battery powered, or both; and
   b. Shall comply with NFPA 720.
3. A product-approved vent terminal must be used, and if applicable, a product-approved air intake must be used. Installation shall be in strict compliance with the manufacturer's instructions. A copy of the installation instructions shall remain with the appliance or equipment at the completion of the installation.

Section IV: Appliance Preparations

4.1 Shipping & Handling Instructions

WARNING

To avoid damage to gas fitting and piping at bottom of appliance, the appliance must be shipped with rear or back of appliance (longest box length) laying down flat.

The CHALLENGER is generally easier to handle and maneuver once removed from the shipping carton.

To remove the shipping carton:

CAUTION

Use care not to lift the appliance from piping or damage can occur. Use care not to drop or bump the appliance as damage to the appliance may result.

1. Remove any shipping straps and the top shipping carton.
2. Carefully lift the appliance out of the carton.
3. Discard all packing materials.

4.2 Wall Mounting Installation

NOTICE

Prior to mounting the appliance, install the piping support bracket according to instructions in Section 4.7.

The CHALLENGER should be wall mounted using the bracket provided with the appliance. This appliance is not designed for floor installation. If floor installation is required, an option floor stand, P/N PSSTND04, is available through ACV-Triangle Tube, see Fig 1. This appliance is not to be installed on carpeting.

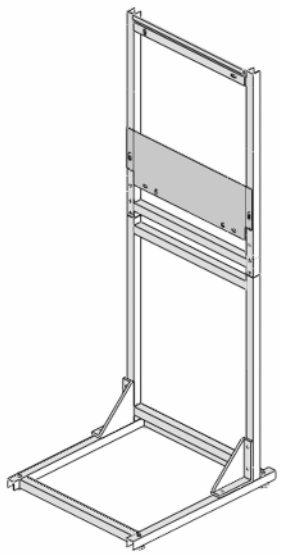

Fig. 1: Optional Floor Stand Assembly

WARNING

The wall used for mounting the CHALLENGER must be vertically plumb and capable of supporting a minimum of 110 pounds [50 kg]. Failure to comply with these requirements can result in substantial property damage, serious injury, or death.

4.3 Wall Mounting Guidelines

1. The wall-mounting bracket is designed for stud spacing of 12 inch [30.5 cm] or 16 inch [40.6 cm] on centers. For unconventional stud spacing, a solid / secure mounting surface must be provided for installation of the bracket.
2. For applications using wood studs, install the bracket using the lag screws provided with the appliance, see Fig 2. Ensure both lag screws are installed securely in the studs.
3. For applications using metal studs, install the bracket to the studs using 3/16" [5 mm] toggle bolts and washers (provided by others), see Fig 2.
4. DO NOT mount or attempt to mount the wall bracket to hollow sheet rock or lath walls using anchors. Only install appliance to studs or equivalent wood structure.
5. For applications using solid walls (rock, concrete, brick, cinder block, etc.), install the wall bracket using anchor (double expansion shields) bolts and washers provided with the appliance.
6. The appliance is too heavy and bulky for a single person to lift and attempt to mount. A minimum of 2 people are required for mounting the appliance.

WARNING

Use extreme care not to drop the appliance or cause bodily injury while lifting or mounting the appliance onto the wall bracket. Once mounted, verify that the appliance is securely attached to the bracket and wall. Failure to comply with the above guidelines can result in substantial property damage, serious injury, or death.

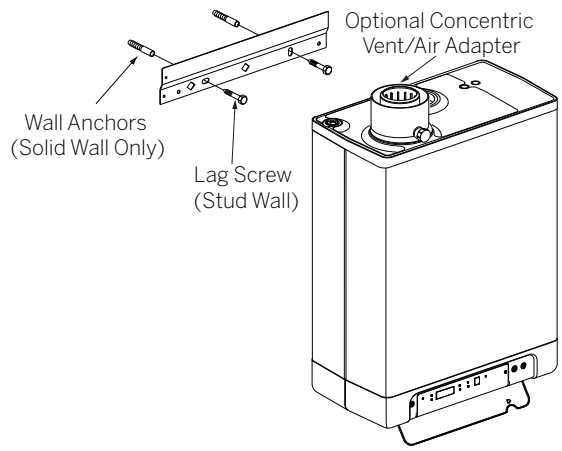

Fig. 2: Wall Mounting the CHALLNENGER

4.4 Stud Wall Installation

1. Locate the studs in the general area of the appliance installation.
2. Place the wall-mounting bracket on the wall centering the mounting slots with the stud centers and ensuring the upper edge of the bracket is away from the wall.
3. Level the bracket while maintaining it's centering with the studs and use a pencil to mark the location of the mounting slots/holes.
4. Remove the bracket from the wall and drill a 1/4" [6 mm] diameter by 3" [76 mm] deep hole in the center of each mark. For applications using metal studs and 3/16" [5 mm] toggle bolts, drill the required clearance hole.
5. Reposition the bracket onto the wall and align with the mounting slots/holes. Insert the two lag screws provided (or toggle bolts for metal studs) through the mounting slots/holes and loosely tighten.
6. Level bracket and tighten screws (bolts for metal studs) securely making sure not to overtighten to avoid damaging drywall or plaster.

4.5 Solid Wall Installation

1. Locate the general area of the appliance installation.
2. Place the wall-mounting bracket on the wall ensuring the upper edge of the bracket is away from the wall.
3. Level the bracket and use a pencil to mark the location of the mounting slots/holes.
4. Remove the bracket from the wall and drill a 5/8" [16 mm] diameter by 1-3/8" [35 mm] deep hole in the center of each mark.
5. Install the provided anchors flush or slightly recessed in the drilled holes with threaded side facing down.
6. Reposition the bracket on the wall and align with the mounting slots/holes. Insert the two bolts with washers through the mounting slots/holes and loosely tighten.
7. Level bracket and tighten bolts securely.

4.6 Appliance Mounting

1. Obtain assistance in lifting the appliance onto the wall bracket.
2. Install the appliance making sure the appliance mounting lip located along the upper edge of the rear jacket panel engages the wall-mounting bracket. Ensure the appliance is seated properly and is secure.

4.7 Piping Support Bracket

CAUTION

Appliance must be installed using the supplied near boiler piping assembly. DO NOT braze direct to copper appliance pipes or damage may result to internal parts.

1. Pre-install the brass compression fittings onto the piping support bracket as shown in Fig. 4, page 12. Use retaining clips to hold fittings in place.

BEST PRACTICE

Apply pipe joint compound to the compression ferrule and compression nut threads of all brass fittings before installation. Install appliance pipes into the fittings until bottom of hex on gas pipe fitting rests against the top of the piping support bracket before tightening any compression nuts. Do not over tighten compression nuts. If the fitting leaks, loosen compression nut first and then retighten.

2. Prior to mounting the appliance on the wall and with the rear or back of appliance laying flat, slip the appliance piping into the fittings until bottom of hex on gas pipe fitting rests against the top of the piping support bracket before tightening any compression nuts.
3. Tighten all fittings to appliance piping connections with two wrenches.

WARNING

Use a two wrench method when tightening piping onto the appliance piping connections. Use one wrench to prevent the appliance connections from turning and the second to tighten adjacent piping. Failure to support the appliance piping connections could damage piping.

4. Once appliance is mounted according to Section 4.6, secure piping support bracket to wall with hardware supplied.

Section V: Boiler Piping

5.1 General Piping Requirements

1. All plumbing must meet or exceed all local, state and national plumbing codes.
2. Support all piping using hangers. DO NOT support piping by the appliance or its components.
3. Use isolation valves to isolate system components.
4. Install unions for easy removal of the CHALLENGER from the system piping.

WARNING

Use a two wrench method when tightening piping onto the appliance piping connections. Use one wrench to prevent the appliance connections from turning and the second to tighten adjacent piping. Failure to support the appliance piping connections could damage piping.

5.2 Pressure Relief Valve (PRV)

1. The CHALLENGER has a ASME Maximum Allowable Working Pressure of 43.5 PSI [3 bar]. The appliance is supplied with a 30 psi [2 bar] pressure relief valve and must be piped using the PRV connection as shown in Fig. 3 page 12.
2. To avoid potential water damage to the surrounding area or potential scalding hazard due to the operation of the relief valve, the discharge piping:

   a. Must be connected to the discharge outlet of the relief valve and directed to a safe place of disposal.

   b. Length should be as short and direct as possible. The size of the discharge line should not be reduced, maintain the same size as the outlet of the relief valve.

   c. Should be directed downward towards the floor at all times. The piping should terminate at least 6 inches [153 mm] above any drain connection to allow clear visibility of the discharge.

   d. Should terminate with a plain end, not with a threaded end. The material of the piping should have a serviceable temperature rating of 250ºF [121ºC] or greater.

   e. Should not be subject to conditions where freezing could occur.

   f. Should not contain any shut-off valves or obstructions. No shut-off valve should be piped between the appliance and relief valve.

WARNING

Failure to comply with the guidelines on installing the pressure relief valve and discharge piping can result in substantial property damage, serious injury, or death.

5.3 Low Water Cut Off / CH Pressure Sensor

NOTICE

The Low Water Cut Off (LWCO) only applies for space heating. Operation of the LWCO does not prevent a Domestic hot water call for heat.

1. The CHALLENGER is equipped with a factory installed pressure sensor type Low Water Cut Off (LWCO).
2. The minimum operating Central Heating (CH) system pressure is 7 psig [0.5 bar].
3. If CH System pressure is below 7 psig [0.5 bar] the main display will flash a soft lockout of "LOP" followed by the pressure reading. Once CH system pressure is increased above 7 psi [0.5 bar], normal boiler operation will be restored. If the appliance is installed as a domestic hot water heater only, set Parameter 1 (installation type) to 2 (domestic only) to eliminate the "LOP" soft lockout. See Setting the Appliance Parameters, Section 12.11
4. Check local codes if a LWCO is required. If so, determine if this device meets their requirements.

5.4 Additional Limit Control

If a Low Water Cut Off (LWCO) is required by certain local jurisdictions or when the boiler is installed above the system piping, the following guidelines must be followed:

1. The LWCO must be designed for water installations, electrode probe-type is recommended.
2. The LWCO must be installed in a tee connection on the boiler supply piping above the appliance.
3. Wiring of the LWCO to the CHALLENGER should be done in series with the 120 VAC service to the appliance.

If the installation is to comply with ASME CSD-1 or Canadian requirements, an additional high temperature limit may be needed. Consult local code requirements to determine compliance. The limit should be installed as follows:

1. Install the limit in the boiler supply piping between the boiler and any isolation valve.
2. Maximum set point for the limit is 200ºF [93ºC].
3. Wiring of the limit device to the CHALLENGER should be done in series with the 120 VAC service to the appliance.

5.5 Backflow Preventer

Use a backflow preventer valve in the make-up water supply to the appliance as required by local codes.

5.6 Boiler System Piping Applications

BEST PRACTICE

It is required on all piping applications to utilize a primary/secondary piping arrangement. Maintain the minimum boiler flow rate, see Graphs 3-6 on pages 65-66.

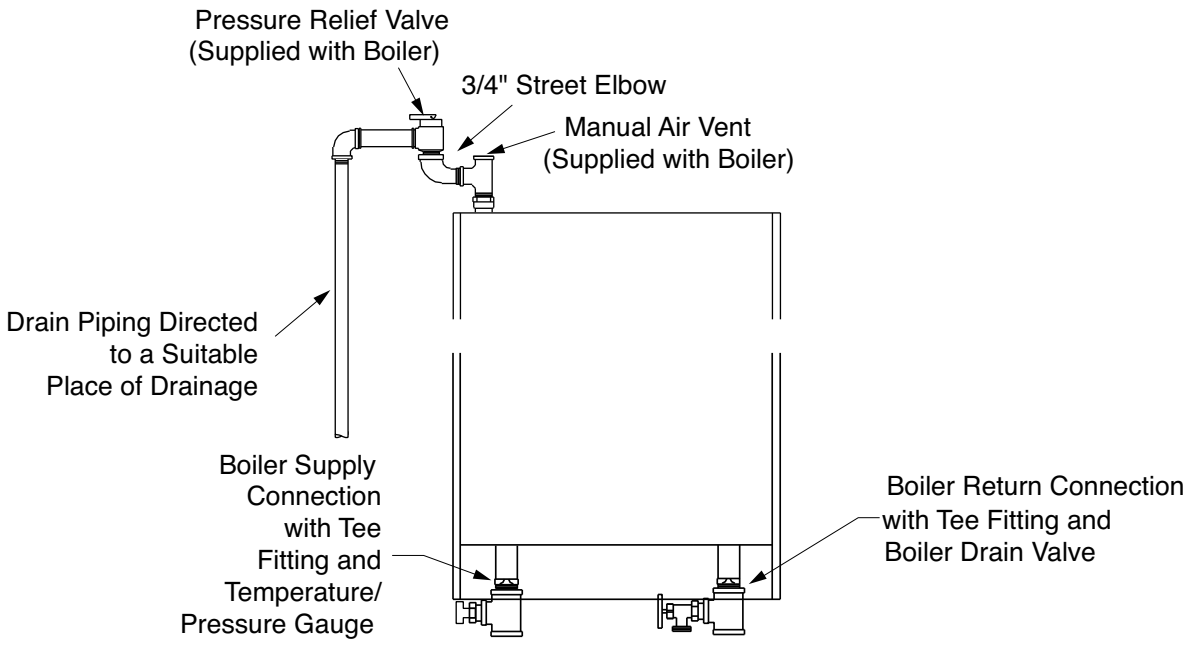

Fig. 3: Boiler Pressure Relief Valve and Drain Valve Installation

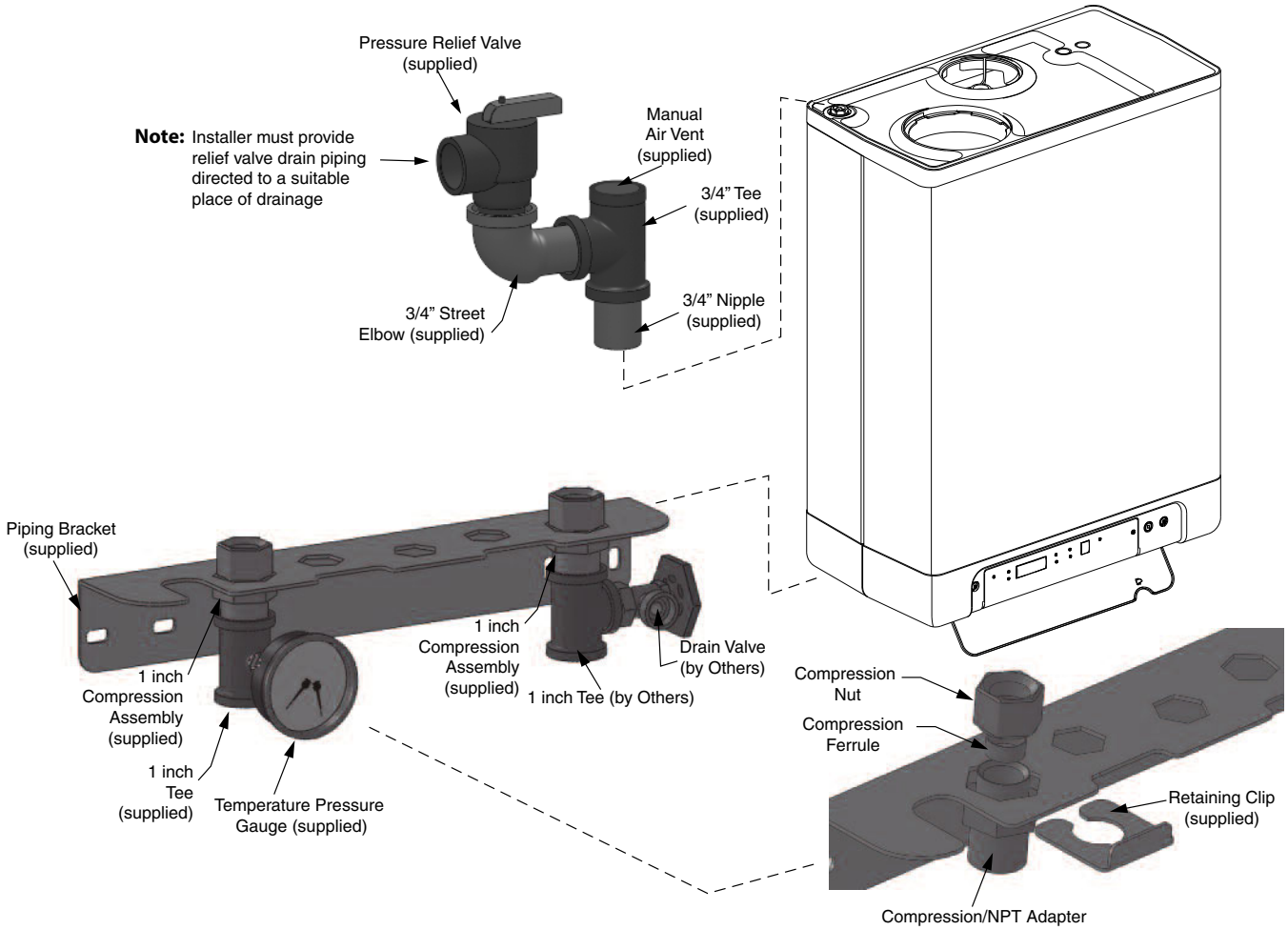

Fig. 4: Near Boiler Piping Assembly

5.7 Expansion Tank and Makeup Water

Ensure the expansion tank is properly sized for the boiler water volume (approximately 1 gallon [4 L]), the system water volume, and system water temperature.

CAUTION

Undersized expansion tanks will cause system water to be lost through the pressure relief valve and cause additional makeup water to be added to the system. Eventual boiler heat exchanger failure can result due to this excessive makeup water addition.

The expansion tank must be located as shown in Fig. 5 and Fig. 6, on page 14, when using a primary/secondary piping arrangement or as per recognized design methods. Refer to the expansion tank manufacturer for additional installation details.

Connect the expansion tank to an air separator only if the air separator is located on the suction side (inlet) of the system circulator. Always locate and install the system fill connection at the same location as the expansion tank connection to the system.

5.7.1 Diaphragm Expansion Tank

Always install an automatic air vent on top of the air separator to remove residual air from the system.

5.7.2 Closed-Type Expansion Tank

It is recommended to pitch any horizontal piping upwards toward the expansion tank 1 inch per 5 feet [2.5 cm per 1.5 meter] of piping. Use 3/4" piping to the expansion tank to allow air within the system to rise.

CAUTION

DO NOT install automatic air vents on a closed-type expansion tank system. Air must remain in the system and be returned to the expansion tank to provide an air cushion. An automatic air vent would cause air to be vented from the system resulting in a water-logged expansion tank.

5.8 Central Heating (CH) Circulator

A Central Heating (CH) circulator with flow check must be utilized with the CHALLENGER. The circulator when wired directly to the CHALLENGER will provide circulation for the freeze protection feature of the boiler control. See Graphs 3-6 on pages 65-66 for pressure drop and minimum flow rate required through the boiler.

5.9 Sizing Primary Piping

See Fig. 7 and 8, on page 15, for recommended piping arrangements based on various applications. Size the piping and system components required in the space heating system using recognized design methods.

5.10 System Piping - Zone Circulators

Connect the CHALLENGER to the system piping as shown in Fig. 7, on page 15, when zoning with zone circulators.

The installer must provide a separate circulator for each zone of space heating.

NOTICE

To ensure an adequate flow rate through the CHALLENGER, the boiler supply and return piping size must be a minimum of 1 inch.

5.11 System Piping - Zone Valves

Connect the CHALLENGER to the system piping as shown in Fig. 8, on page 15, when zoning with zone valves.

NOTICE

To ensure an adequate flow rate through the CHALLENGER, the boiler supply and return piping size must be a minimum of 1 inch.

5.12 System Piping - Radiant Heating

The heat exchanger design of the CHALLENGER allows operation in a condensing mode. This feature requires no regulation of the return water temperature back to the boiler in radiant heating applications.

The maximum boiler water supply temperature can be maintained by the CHALLENGER, potentially eliminating the need for a mixing system to achieve the desired temperature if all zones of heat are at the same temperature set point.

Size the system piping and circulator to provide the flow needed for the radiant system.

NOTICE

To ensure an adequate flow rate through the CHALLENGER, the boiler supply and return piping size must be a minimum of 1 inch.

5.13 System Piping - Indirect Fired Water Heater

See Figs. 7 and 8, on page 15, for recommended piping of a ACV-Triangle Tube SMART/COMFORT I.F.W.H. This application will provide higher domestic hot water flow rates for a short period of time (dump load). The SMART/COMFORT boiler piping should be piped off the primary loop.

NOTICE

The boiler system piping must be a "closed" system to avoid any oxygen contamination and potential failure of the outer tank of the SMART/COMFORT I.F.W.H.

The CHALLENGER's domestic piping should not be utilized. Refer to the installation manual provided with the SMART/COMFORT for additional installation details.

See Setting the Appliance Parameters, Section 12.11, for parameter, wiring and operational details using the SMART/COMFORT with a CHALLENGER boiler.

5.14 System Piping - Special Application

If the boiler is used in conjunction with a chilled water/medium system, the boiler and chiller must be piped in parallel. Install flow/check valves to prevent the chilled medium from entering the boiler.

If the boiler is used to supply hot water to the heating coils of an air handler where they may be exposed to chilled air circulation, install flow/check valves or other automatic devices to prevent gravity circulation of the boiler water during cooling cycles.

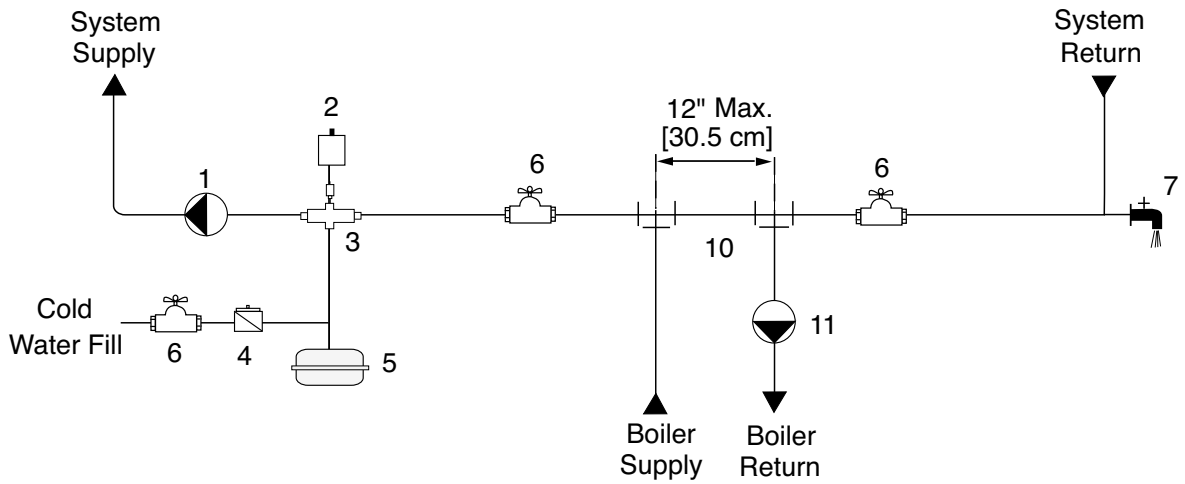

Fig. 5: Near Boiler Piping - Diaphragm Expansion Tank

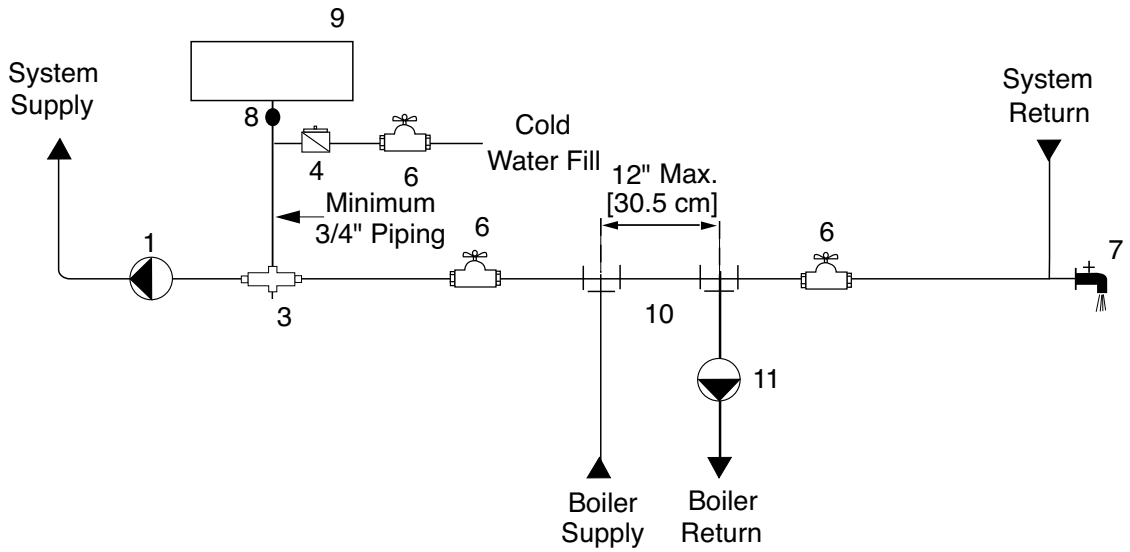

Fig. 6: Near Boiler Piping - Closed Type Expansion Tank

1. System Circulator
2. Automatic Air Vent
3. Air Separator
4. Automatic Fill Valve
5. Diaphragm Expansion Tank
6. Isolation Valve
7. Drain/Purge Valve
8. Tank Fitting
9. Closed Type Expansion Tank
10. Primary/Secondary Connection
11. CH Circulator with Flow Check

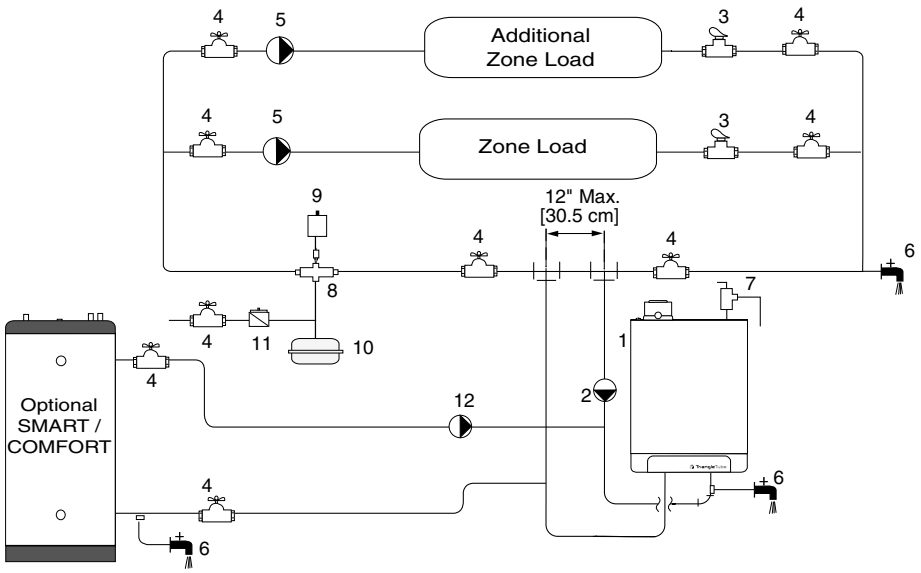

Fig. 7: System Piping - Zoning with Zone Circulators

1. CHALLENGER Boiler
2. Boiler Circulator with Flow Check
3. Flow/Check Valve
4. Isolation Valve
5. Zone Circulator
6. Drain/Purge Valve
7. Pressure Relief Valve
8. Air Separator
9. Automatic Air Vent
10. Diaphragm Expansion Tank
11. Automatic Fill Valve
12. DHW Circulator with Flow Check

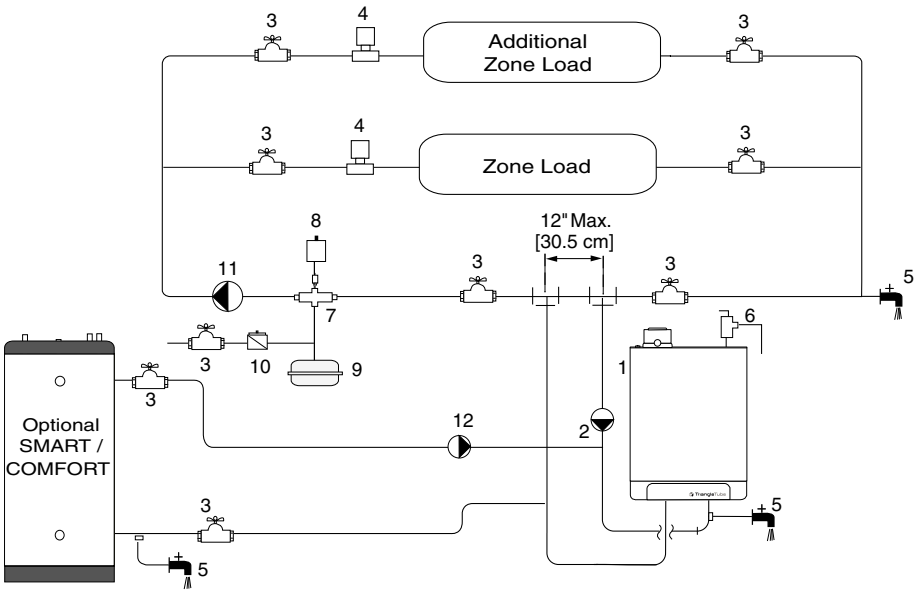

Fig. 8: System Piping - Zoning with Zone Valves

1. CHALLENGER Boiler
2. Boiler Circulator with Flow Check
3. Isolation Valve
4. Zone Valve
5. Drain/Purge Valve
6. Pressure Relief Valve
7. Air Separator
8. Automatic Air Vent
9. Diaphragm Expansion Tank
10. Automatic Fill Valve
11. System Circulator
12. DHW Circulator with Flow Check

Section VI: Domestic Piping

WARNING

HOT WATER CAN SCALD!

- **Water temperatures over 125°F [52°C] can cause severe burns instantly, or death from scalds.**
- **Feel water before bathing or showering.**
- **Consumer Product Safety Commission and some states recommend temperature settings of 130°F [54°C] or less. Setting thermostat higher than 130°F [54°C] will increase risk of scald injury and cause severe personal injury or death.**
- **Water heated to a temperature suited for clothes washing, dish washing and other sanitization needs will scald and cause permanent injury.**
- **Children and elderly, infirm, or physcally handicapped persons are more likely to be injured by hot water. Never leave them unattended in or near a bathtub. If anyone using hot water in the building fits this description, or if state laws or local codes require certain water temperatures at hot water faucets, take special precautions.**
  - **Install the factory supplied thermostatic mixing valve at the water heater. Installation must comply with valve manufacturer's recommendation and instructions.**
  - **Use the lowest practical temperature set ting**
  - **Check water temperature after any adjustment. You must follow "Setting the Thermostatic Mixing Valve" procedure in Section 6.13.**

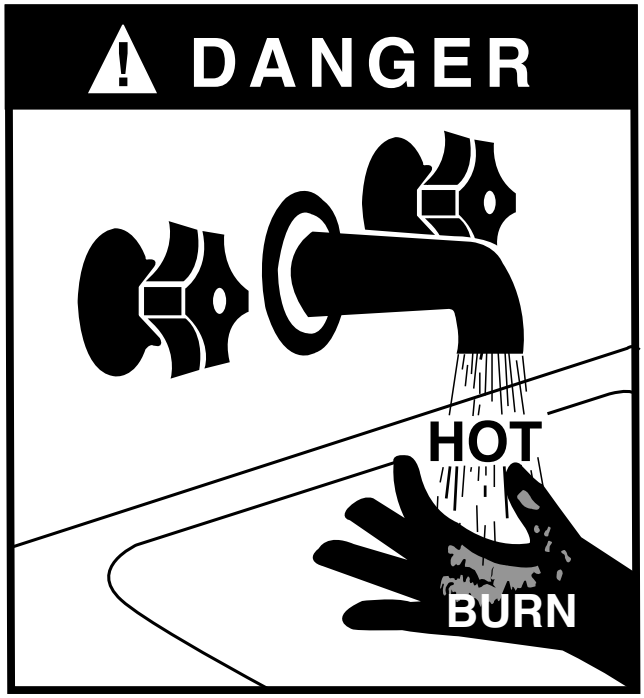

6.1 General Notes

- Household water usage patterns will affect water temperature at any faucet or shower. Occasionally check temperature at each point of use, then adjust thermostatic mixing valve accordingly. Always recheck temperature after adjusting.
- Lowering the thermostatic mixing valves as indicated in these instructions will reduce water temperature levels. Consult your installer or service technician.

6.2 Operating Restrictions

- Minimum DHW flow rate is 0.5 gpm [2lpm] to initiate a domestic call.
- Maximum DHW outlet temperature is 149°F [65°C].
- Minimum domestic working pressure is 40 psig [3 bar].

NOTICE

When the CHALLENGER is installed in a domestic well application, the cut in pressure of the domestic well pump's control must be set to 40 psig [3 bar] to ensure more consistent domestic flow and temperature performance.

- Maximum domestic working pressure is 150psig [10bar].
- Water quality limitations (based on E.P.A National Secondary Drinking Water Regulations):
  - Chloride, less than 150ppm or mg/l.
  - pH value min. 6.5, max. 8.5.
  - Total hardness 3 - 7 grains/gallon or 50 - 120 ppm or mg/l.
  - Total Dissolved Solids (TDS), less than 120 ppm or mg/l.
  - Iron, less than 0.3 ppm or mg/l
  - Aluminum, less than 0.2 ppm or mg/l
  - Copper, less than 1 ppm or mg/l
  - Manganese, less than 0.05 ppm or mg/l
  - Zinc, less than 5 ppm or mg/l

BEST PRACTICE

In hard water areas (more than 7 grains of hardness) soften the cold domestic supply water to the appliance to prevent scaling.

NOTICE

Any water conditioning system must be installed and maintained in accordance with manufacturer's specifications.

6.3 Pressure Relief Valve - Standard Installations

The domestic water heater (if utilized) shall have a field supplied pressure relief valve installed within 6" [152mm] of the DHW hot outlet connection with the relief valve spindle installed in the vertical position.

The domestic water heater (if utilized) requires a field supplied pressure relief valve identified with the ASME V or HV symbol and set to relieve at or below 150 psi [10 bar] of domestic water pressure and a minimum relieving capacity of 125,000 Btu/hr with 3/4" NPT threads. For safe operation of the domestic water heater, the relief valve must not be removed from its designated location of installation or plugged.

1. The CHALLENGER is not supplied with a 150 psi [10bar] pressure relief valve and must be piped using a pressure relief valve connected as shown in Fig. 11 on page 20.
2. To avoid potential water damage to the surrounding area or potential scalding hazard due to the operation of the relief valve, the discharge piping:
   - Must be connected to the discharge outlet of the relief valve and directed to a safe place of disposal.
   - Length should be as short and direct as possible. The size of the discharge line should not be reduced, maintain the same size as the outlet of the relief valve.
   - Should be directed downward towards the floor at all times. The piping should terminate at least 6 inches [152mm] above any drain connection to allow clear visibility of the discharge.
   - Should terminate with a plain end, not with a threaded end. The material of the piping should hae a serviceable temperature rating 250°F [121°C] or greater.
   - Should not be subject to conditions where freezing could occur.
   - Should not contain any shut-off valves or obstructions. No shut-off valves should be piped between the appliance and relief valve.

WARNING

Failure to comply with the guidelines on installing the pressure relief valve and discharge piping can result in substantial property damage, serious injury or death.

6.4 Temperature & Pressure (T&P) Relief Valve - Storage Tank or SMART/COMFORT Installations

CAUTION

To reduce risk of excessive pressures and temperatures in a storage tank or ACV-Triangle Tube SMART/COMFORT I.F.W.H., install a temperature and pressure relief valve certified by a nationally recognized testing laboratory that maintains periodic inspection of production of listed equipment or materials, as meeting the requirements for Relief Valves and Automatic Gas Shutoff Devices for Hot Water Supply Systems (ANSI Z21.22). This valve must be marked with the maximum working pressure of the domestic water heater (150psi).

- The storage tank or SMART/COMFORT must be protected with field supplied T&P relief valve.
- Size the T&P relief valve by the following specifications, unless the conflict with local codes: 3/4" NPT with a minimum AGA Rating of 125,000 BTU/hr.

T&P Relief Valve Discharge Piping

T&P relief valve discharge piping must be:

- made of material serviceable for temperatures of 250°F [121°C] or greater.
- directed so that hot water flows away from all persons.
- directed to a suitable place for disposal.
- installed so as to allow complete draining of the T&P relief valve and discharge line.

T&P relief valve discharge MUST NOT be:

- excessively long, using more than 2 elbows or 15 feet [4.5 m] of piping can reduce discharge capacity.
- directly connected to a drain, terminate discharge piping within 6" [152mm] from drain, refer to local codes.
- plugged, reduced or restricted.
- subjected to freezing.

WARNING

Do not install any valve between T&P relief valve and the storage tank or SMART/COMFORT connection or on T&P relief valve discharge piping. Do not plug T&P relief valve or discharge piping. Improper placement and piping of T&P relief valve can cause substantial property damage, serious injury or death.

WARNING

Isolation valves are only indended for servicing the domestic coil. During any domestic service, the appliance should be turned off and the domestic coil drained to prevent over pressurization of the appliance's domestic coil.

6.5 Drain valves

Drain valves and fittings are field supplied.

6.6 Thermal Expansion

If a backflow preventer, check valve or pressure reducing valve is installed on the cold water supply piping of the domestic water heater, install an expansion tank on the cold water supply line to prevent normal thermal expansion from repeatedly forcing open the relief valve.

CAUTION

Relief valve is not intended for constant duty, such as relief of pressure due to repeated normal system water expansion. Correct this condition by installing a properly sized expansion tank in the domestic water system. Refer to expansion tank manufacturer's installation instructions for proper sizing.

The domestic water volume of the CHALLENGER is approximately 0.26 gallons [1 l]. Remember to include this volume when sizing the expansion tank.

6.7 Water Hammer

Dishwashes, clothes washers and fast-closing positive shut-off valves incorporated into the system all contribute to creating water shock. Install a water hammer arrester to prevent damage to pipes and appliances. See device manufacturer's instructions for application and installation.

6.8 Vacuum Breaker - Storage Tank or SMART/COMFORT Installations

Installing a vacuum breaker on the inlet of the storage tank will prevent damage to the tank if a negative pressure is developed in the domestic supply line. See manufacturer's instructions for application and installations.

6.9 General Piping Requirements

- For domestic water piping diagrams, see Figs. 11 and 12 on pages 20 and 21.

BEST PRACTICE

It is recommended to install flush valves as outlined in Figs. 11 and 12 on pages 20 and 21 for servicing the domestic coil.

BEST PRACTICE

It is recommended to install a strainer on the domestic cold water inlet to prevent any nuisance issues with the domestic flow sensor. An optional lead free, 60 mesh y-strainer is available through ACV-Triangle Tube, part number CCSTRA01.

- All plumbing must meet or exceed all local, state and national plumbing codes.
- Use pipe joint compound or tape suitable for potable water systems.
- Size all piping no smaller than the appliance's DHW connections.
- Use isolation valves to isolate the DHW connections and system components.
- Use dielectric unions or couplings to protect hot and cold water fittings from corrosion when connecting dissimilar materials such as copper and galvanized iron pipe.
- If copper pipe is used for domestic water connections, first solder the pipe to a threaded adapter and then screw adapter onto the domestic cold water inlet of the appliance. The domestic cold water inlet contains an internal plastic flow sensor which can be damaged by heat from soldering.

NOTICE

Do not aply heat to the domestic cold water inlet when making solder connections to the water heater. Solder tubing to adapter before fitting adapter to cold water inlet of heater. It is imperative that no heat be applied to the cold water inlet, as it contains a non-metallic flow sensor.

6.10 Thermostatic Mixing Valve

The CHALLENGER is factory supplied with a thermostatic mixing valve with built-in check valves on the hot and cold inlets. The mixing valve must be installed as shown in Figs. 9, 11, and 12.

The water temperature range of the thermostatic mixing valve is 85°F [30°C] to 140°C [60°C].

The thermostatic mixing valve is preset to its mimimum water temperature of 85°F [30°C].

BEST PRACTICE

Additional thermostatic/anti-scald valves should be installed at each hot water faucet, bath and shower outlet.

For applications with a domestic recirculation loop, the recirculation pump should be controlled by an aquastat. The maximum recommended setting of the aquastat is 10°F [5°C] lower than the thermostatic mixing valve setting.

DANGER

For proper operation of the thermostatic mixing valve, and to prevent potential scaling hazards, the recirculation loop should be controlled by an aquastat. DO NOT use continuous recirculation.

6.11 Recirculation Piping

- Recirculation return piping, if applicable, must be installed in the cold water inlet as shown in Figs. 11 and 12 on pages 20 and 21.
- A stainless steel or bronze circulator is recommended and must be contolled by an aquastat.

6.12 Storage Tank Installation

For applications requiring high domestic hot water flow rates for a short period of time (dump load), the installer may install a storage type tank (see Fig. 12 on page 21) in the domestic piping.

The installer must :

1. Relocate the thermostatic mixing valve from the CHALLENGER to the outlet of the storage tank.
2. Remove domestic restrictor at the inlet of the domestic flow sensor
3. Provide recirculation from the storage tank back to the CHALLENGER using a bronze or stainless steel circulator.

6.13 Setting the Thermostatic Mixing Valve

NOTICE

The thermostatic mixing valve controls the outlet hot water temperature delivered to the faucets.

WARNING

POTENTIAL SCALD HAZARD. The mixing valve must be installed on the CHALLENGER. Removal or adjustment of the mixing valve will create a potential scald hazard resulting in severe personal injury or death.

If any adjustment needs to be made to the valve's temperature setpoint, refer to the manufacturer's instructions included with the valve.

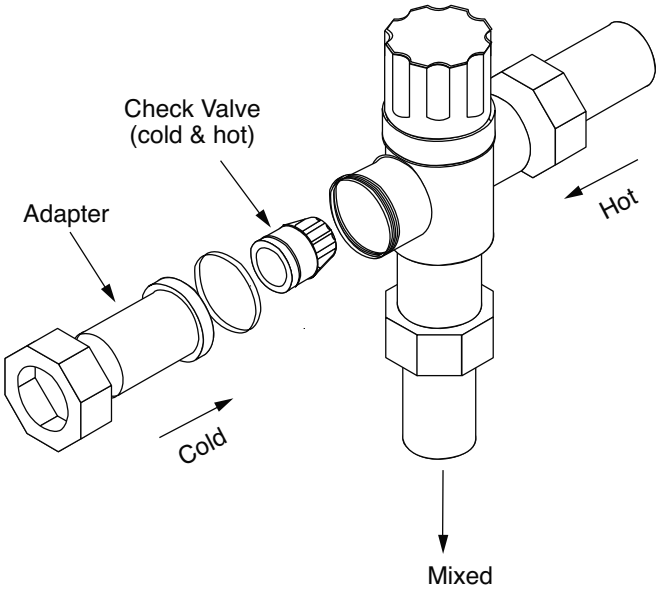

Figure 9: Mixing Valve Assembly

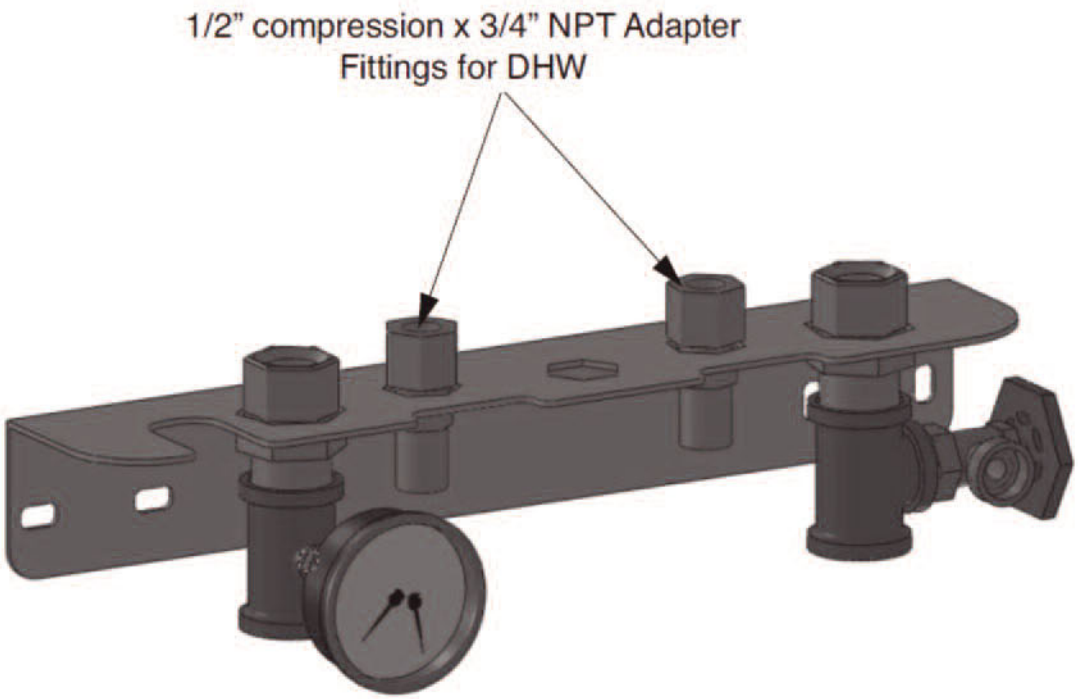

Figure 10: Installation of Domestic Compression Adapter Assemblies

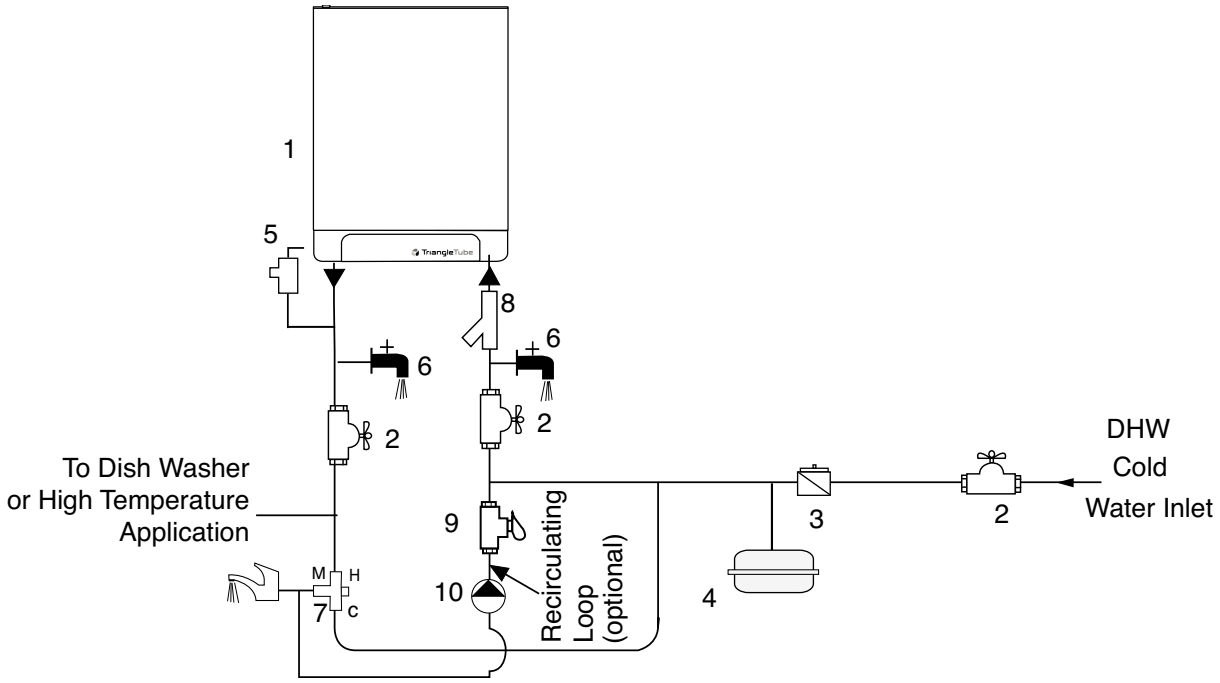

Figure 11 Domestic Piping - Standard Installations

1. CHALLENGER
2. Isolation valve
3. Backflow preventer or pressure reducing valve (*)
4. Thermal expansion tank (potable) (*)
5. Domestic pressure relief valve - 150 psi max.
6. Drain/flush valve
7. Mixing valve with check valve
8. Strainer (*)
9. Flow check valve (*)
10. Circulator (potable, must be controlled by an aquastat) (*)

(*) Optional device may be required by local codes

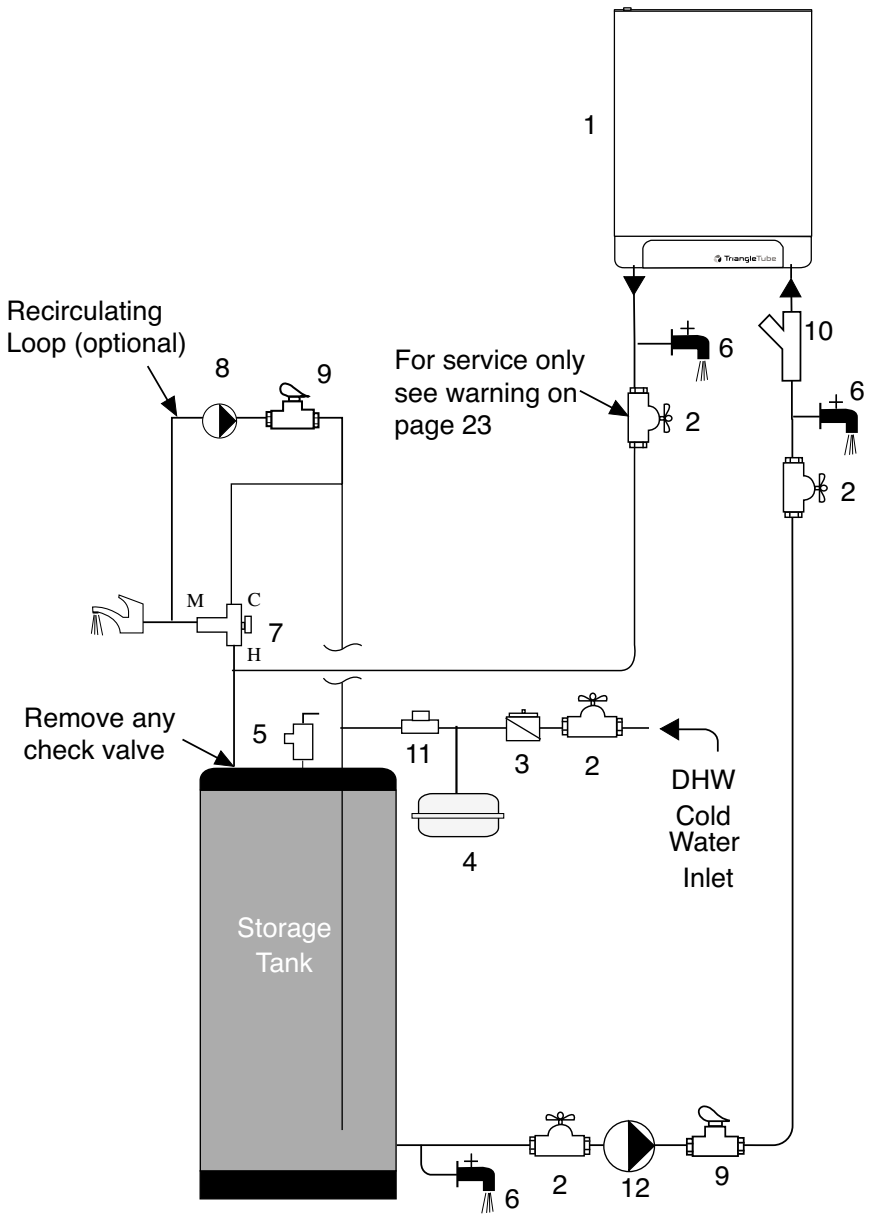

Note:

Domestic cold water inlet through a storage tank will yield a lower domestic pressure drop in addition to greater domestic performance.

Domestic set point temperature should be set to 149°F [65°C], see Section 12.8. DHW function button ( ) should be set to ON ( ) at the display panel, see Section 12.5.

Figure 12: Domestic Piping - Storage Tank Installations

1. CHALLENGER
2. Isolation valve
3. Backflow preventer or pressure reducing valve (*)
4. Thermal expansion tank (potable) (*)
5. Temperature/Pressure relief valve
6. Drain/flush valve
7. Mixing valve with check valve
8. Circulator (potable, must be controlled by an aquastat) (*)
9. Flow check valve
10. Strainer (*)
11. Vacuum breaker (*)
12. Domestic circulator (potable Grunfos UP26-99BF or Taco 009-SF5 or equivalent sized for 2.5 gpm [9.5 lpm] at 32 feet [9.7 m], must be controlled by a aquastat mounted on the storage tank with a maximum set point of 130°F [55°C].

(*) Optional device may be required by local codes

Section VII: Installing Vent / Combustion Air & Condensate Drain

7.1 Installing Vent & Combustion Air

DANGER

The CHALLENGER must be vented and supplied with combustion air as shown in the CHALLENGER PVC, CPVC, PP and SS Vent Supplement included in the installation envelope. Refer to instructions for parts list and method of installation. Once installation is completed, inspect the vent and combustion air system thoroughly to ensure systems are airtight and comply with the instructions given in the venting supplement and are within all requirements of applicable codes. Failure to comply with the installation requirements of the venting and combustion air piping will result in substantial property damage, serious injury, or death.

NOTICE

Contact ACV - Triangle Tube for other venting options including PVC Concentric Vent/Air Termination or CHALLENGER Concentric Vent/Air System. Refer to these instructions for parts list and method of installation.

7.2 Installing Condensate Drain Assembly

1. Locate the condensate trap assembly and cut the top with a hacksaw or knife and install as shown in Fig. 13.

NOTICE

The installer must fill the condensate trap with water prior to assembling on the appliance. Do not operate appliance without factory supplied condensate trap installed on appliance.

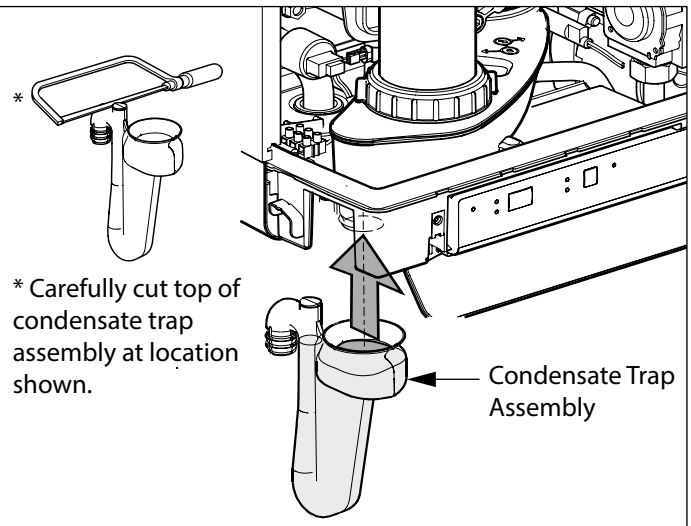

Fig. 13: Condensate Trap Installation

WARNING

For the CHALLENGER CC125H, a large condensate trap (9.25" [235 mm] long) is used. Refer to Fig. 29 on page 56 for appropriate part numbers. Using the standard condensate trap (4.75" [120 mm] long) on these models is prohibited and can result in substantial property damage, serious injury, or death.

2. Remove front door and install trap. Ensure the trap is completely seated and secure on the appliance.
3. Connect 13/16" ID tubing to the drain barbed fitting on the trap assembly.

NOTICE

The drain line materials must be an approved material by the authority having jurisdiction. In absence of such authority, PVC and CPVC piping must comply with ASTM D1785 or D2845. The cement and primer used on the piping must comply with ASME D2564 or F493. For installations in Canada, use ULC certified PVC or CPVC pipe, fittings, and cement/primer.

4. Continue the tubing from the trap assembly to a floor drain or condensate pump.

NOTICE

When selecting and installing a condensate pump, ensure the pump is approved for use with condensing appliances. The pump should be equipped with an overflow switch to prevent property damage from potential condensate spillage.

5. The CHALLENGER will typically produce a condensate that is considered slightly acidic with a pH content below 4.0. Install a neutralizing filter if required.

CAUTION

The condensate drain must remain filled, unobstructed, and allow unrestricted flow of condensate. The condensate should not be subject to conditions where freezing could occur. If the condensate is subjected to freezing or becomes obstructed, it can leak, resulting in potential water damage to the appliance and surrounding area.

Section VIII: Gas Piping

8.1 Gas Supply Piping Connection

NOTICE

The gas supply piping must be installed in accordance to all applicable local, state, and national codes in addition to all utility requirements.

1. Install a 1/2" NPT pipe union at the factory supplied gas piping nipple, for ease of service.
2. Install the factory supplied manual shutoff valve in the gas supply piping as shown in Fig. 14. For installations in Canada the installer must tag and identify the main shutoff valve.
3. Install a sediment trap (drip leg) on the gas supply line prior to connecting to the CHALLENGER gas train as shown in Fig. 14.
4. Support the gas piping using hangers. Do not support the piping by the appliance or its components.
5. Purge all air from the gas supply piping.
6. Before placing the CHALLENGER into operation, check and test all piping connections for leaks.
7. Close the manual shutoff valve during any pressure test with less than 13" w.c. [32 mbar].
8. Disconnect the CHALLENGER and it's gas valve from the gas supply piping during any pressure test greater than 13" w.c. [32 mbar].

WARNING

Do not check for gas leaks with an open flame. Use a gas detection device or bubble test. Failure to check for gas leaks can result in substantial property damage, serious injury, or death.

9. Use pipe joint compound compatible with natural and propane gases. Apply sparingly only to the male threads of pipe joints so that pipe dope does not block gas flow.

WARNING

Failure to apply pipe joint compound as detailed above can result in substantial property damage, serious injury, or death.

WARNING

Use a two wrench method when tightening piping onto the appliance piping connections. Use one wrench to prevent the appliance connections from turning and the second to tighten adjacent piping. Failure to support the appliance piping connections could damage piping.

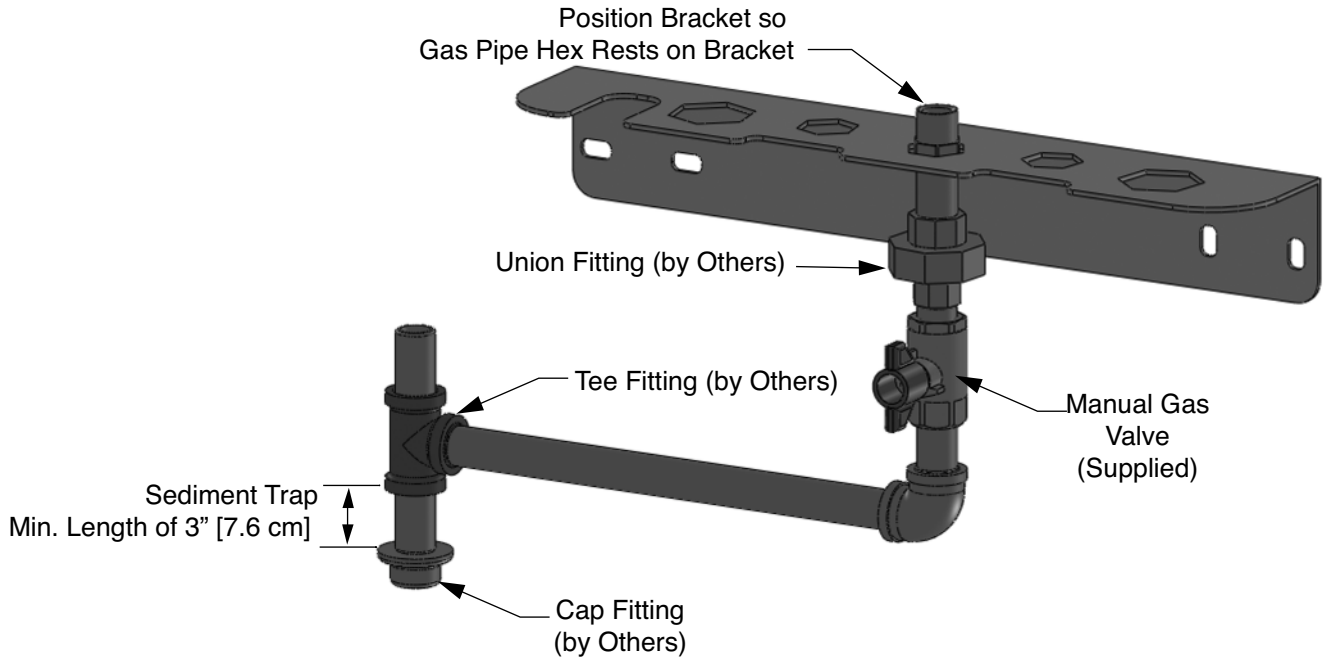

Fig. 14: Recommended Gas Supply Piping

8.2 Natural Gas

8.2.1 Pipe Sizing

Refer to Table 1 for schedule 40 metallic pipe length and diameter requirements for natural gas, based on rated CHALLENGER input (divide by 1,000 to obtain cubic feet per hour).

- Table 1 is based on Natural Gas with a specific gravity of 0.60 and a pressure drop through the gas piping of 0.30" w.c. [0.75 mbar].
- For additional gas sizing information, refer to ANSI Z223.1. For Canadian installations refer to CAN/CSA B149.1.

8.2.2 Supply Pressure Requirements

1. Pressure required at the gas valve inlet supply pressure port:
   - Maximum 13" w.c. [32 mbar] at flow or no flow conditions to the burner.
   - Minimum 5" w.c. [13 mbar] during flow conditions to the burner. Must be verified during start up and with all other gas appliances operating within the gas piping service.
   - Maximum gas inlet pressure must not be exceeded and minimum gas inlet pressure is for the purpose of input adjustment.
2. Install 100% lockup gas pressure regulator in the gas supply line if inlet pressure can exceed 13" w.c. [32 mbar] at any time. Adjust the lockup pressure regulator for 13" w.c. [32 mbar].

WARNING

DO NOT adjust or attempt to measure gas valve outlet pressure. The gas valve is factory-set for the correct outlet pressure. This setting is suitable for natural and propane gas and requires no field adjustment. Attempts by the installer to adjust or measure the gas valve outlet pressure could result in damage to the valve and can cause substantial property damage, serious injury, or death.

8.2.3 Orifice Requirements

Refer to Table 2 for orifice required for appliance operation using natural gas. All units come set up for natural gas installation with the appropriate orifice pre-installed.

Table 2: Natural Gas Orifice Requirements

CHALLENGER Model	Natural Orifice Size	Orifice Marking
CC105	0.256" [6.50 mm]	650
CC125	0.285" [7.25 mm]	725
CC125H	0.217" [5.50 mm]	550

Table 1: Gas Pipe Sizing - Natural Gas

Length of Pipe in Feet	Capacity of Schedule 40 Metallic Pipe in Cubic Feet of Natural Gas Per Hour (based on 0.60 specific gravity & 0.30" w.c. pressure drop)				
SCH 40	**1/2"**	**3/4"**	**1"**	**1-1/4"**	**1-1/2"**
10	132	278	520	1050	1600
20	92	190	350	730	1100
30	73	152	285	590	890
40	63	130	245	500	760
50	56	115	215	440	670
75	45	93	175	360	545
100	38	79	150	305	460
150	31	64	120	250	380

8.3 Propane Gas

8.3.1 Pipe Sizing

WARNING

The unit was shipped with a propane conversion kit which is located on the top of the unit in the instructions packet. This kit includes all the necessary parts and instruction to perform the conversion from natural gas to propane gas. If this conversion kit is missing, please contact ACV - Triangle Tube Technical Support for missing kit before installing unit.

WARNING

Prior to start up, ensure the appliance is set to fire propane. Check the rating label for the type of fuel. Check the gas valve for propane conversion label. If there is a conflict or doubt on the burner set up, remove the gas valve and check for the propane gas orifice, see Fig. 15. Failure to ensure proper burner set up can result in substantial property damage, serious injury, or death.

Contact the local propane gas supplier for recommended sizing of piping, tanks, and 100% lockup gas regulator.

8.3.2 Supply Pressure Requirements

1. Adjust the propane supply regulator provided by the gas supplier for 13" w.c. [32 mbar] maximum pressure.
2. Pressure required at the gas valve inlet supply pressure port:
   - Maximum 13" w.c. [32 mbar] at flow or no flow conditions to the burner.
   - Minimum 5" w.c. [13 mbar] during flow conditions to the burner. Must be verified during start up and with all other gas appliances operating within the gas piping service.
   - Maximum gas inlet pressure must not be exceeded and minimum gas inlet pressure is for the purpose of input adjustment.

WARNING

DO NOT adjust or attempt to measure gas valve outlet pressure. The gas valve is factory-set for the correct outlet pressure. This setting is suitable for natural and propane gas and requires no field adjustment. Attempts by the installer to adjust or measure the gas valve outlet pressure could result in damage to the valve and can cause substantial property damage, serious injury, or death.

8.3.3 Orifice Requirements

Refer to Table 3 for orifice required for appliance operation using propane gas. All units come set up for natural gas installation with the appropriate orifice pre-installed. For conversion to propane, refer to the included propane conversion kit which is located on the top of the unit in the instructions packet.

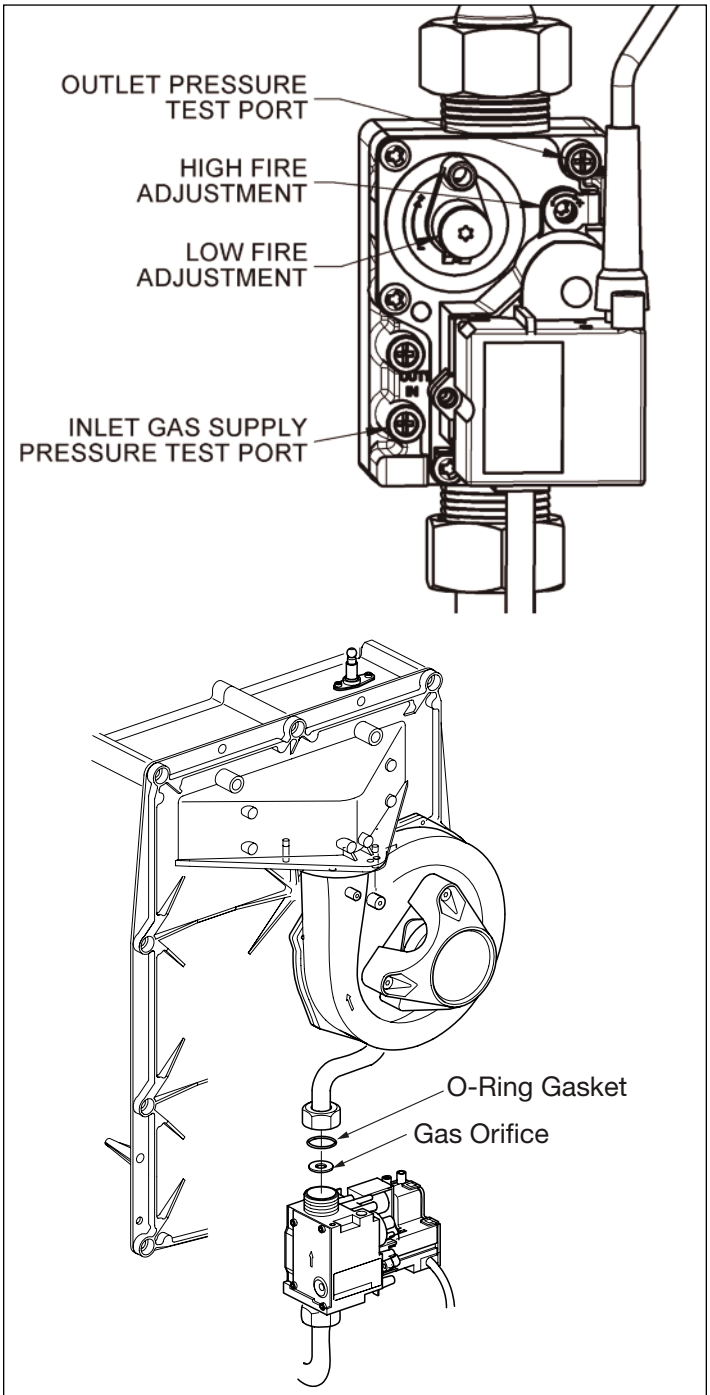

Fig. 15: Gas Orifice Assembly

Table 3: Propane Gas Orifice Requirements

CHALLENGER Model	Propane Orifice Size	Orifice Marking
CC105	0.199" [5.05 mm]	505
CC125	0.220" [5.60 mm]	580
CC125H	0.181" [4.60 mm]	460

Section IX: Internal Wiring

9.1 General Requirements

WARNING

ELECTRICAL SHOCK HAZARD
For your safety, disconnect electrical power supply to the appliance before servicing or making any electrical connections to avoid possible electric shock hazard. Failure to do so can result in substantial property damage, serious injury, or death.

CAUTION

Prior to servicing, label all wires before disconnecting. Wiring errors can cause improper and dangerous operation. Verify proper wiring and operation after servicing.

- Wiring must be N.E.C. Class 1.
- If original wiring as supplied with the appliance must be replaced, use only Type T 194F [90°C] wire or equivalent as a minimum.
- The CHALLENGER must be electrically grounded as required by National Electrical Code (ANSI/NFPA 70) and/or the Canadian Electrical Code Part 1 (CSA C22.1).

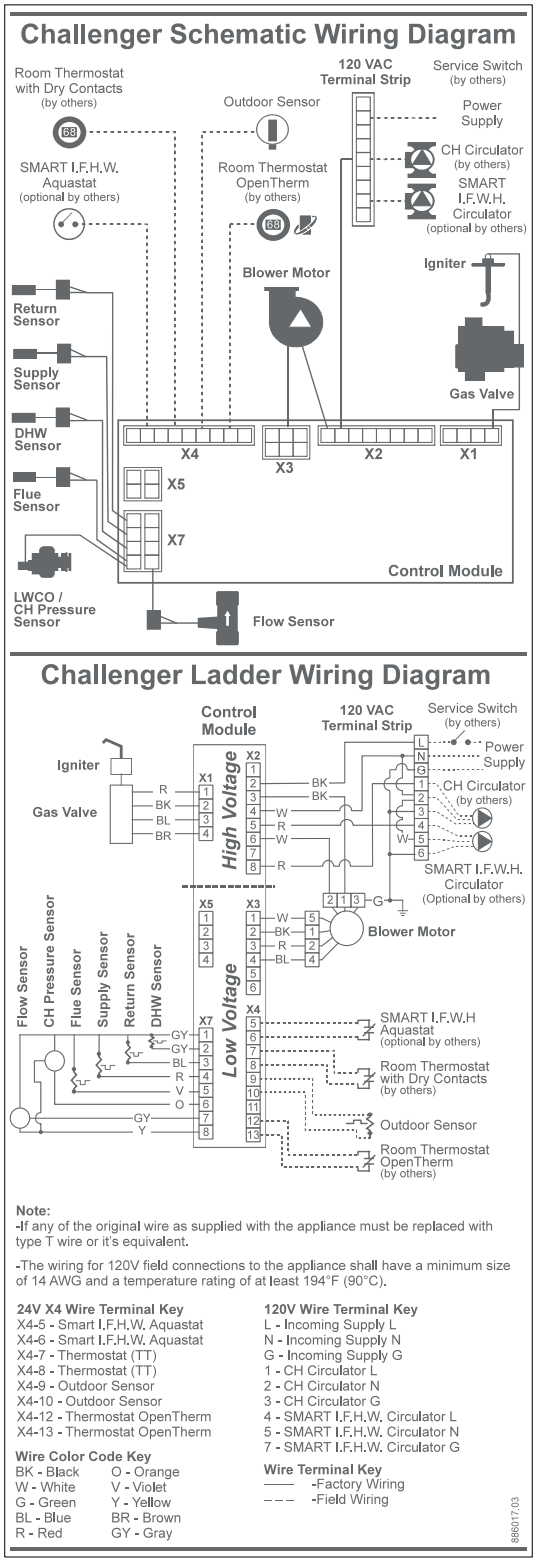

Fig. 16: CHALLENGER Factory Wiring Diagram

Section X: External Wiring

10.1 Installation Compliance

All field wiring made during installation must comply with:

- National Electrical Code (NFPA 70) and any other national, state, provincial, or local codes or requirements.
- In Canada, Canadian Electrical Code Part 1 (CSA C22.1) and any other local codes.

WARNING

ELECTRICAL SHOCK HAZARD
For your safety, disconnect electrical power supply to the appliance before servicing or making any electrical connections to avoid possible electric shock hazard. Failure to do so can result in substantial property damage, serious injury, or death.

10.2 Line Voltage Connections

1. Connect a 120 VAC/15A service to the 120V terminals L, N, and G inside the CHALLENGER as shown in Fig. 16 on page 26.
2. Route the incoming 120 VAC power wire through the provided openings in the bottom right side jacket panel.
3. The appliance must be provided with an external service switch. Check local code requirements for compliance.

NOTICE

The installer must provide and install a fused disconnect or minimum 15 amp service switch. Check local electrical code requirements for compliance.

WARNING

The ON/OFF switch of the CHALLENGER only disables the function of the appliance. Electrical power remains at the control module. To avoid a shock hazard, disconnect power at the external service switch when servicing the appliance.

10.3 Circulator Maximum Current Rating

The AMP draw of the CH/DHW circulators must not exceed 2.3 amps

10.4 Central Heating (CH) Circulator

1. Wire the DHW circulator to the CHALLENGER 120 V terminals 1, 2, and 3 located inside the appliance as shown in Fig. 16 on page 26.
2. Maximum CH circulator continous current draw is 2.3 A.

10.5 DHW Circulator for Optional SMART/COMFORT I.F.W.H.

1. Wire the DHW circulator to the CHALLENGER 120 V terminals 4, 5, and 6 located inside the appliance as shown in Fig. 16 on page 26.
2. Maximum DHW circulator continuous current draw is 2.3 A.

10.6 System Circulator - Zone Valve Application

To energize the system circulator shown as item 11 in Fig. 8 on page 15, reference Fig. 18 on page 28. Installer to provide a Transformer/Relay such as Honeywell R8285 or equivalent and Zone Valves with isolated end switch such as Honeywell V8043 or equivalent.

10.7 Low Voltage Connections

1. Open the display cover and unscrew both screws to remove the front cover, see Fig. 17.
2. Pull the control/display forward until it tips downwards to provide access to the low voltage terminal strip, see Fig. 17.
3. Ensure field installed low voltage wiring is not run parallel or next to telephone or power wiring.
4. Consult Table 4 for making low voltage connections.

Table 4: Low Voltage Electrical Connections

Low Voltage Devices	Connector X4	Notes
Room thermostat	7-8	Voltage Free
Outdoor temperature sensor	9-10	-
SMART/COMFORT Aquastat (Optional)	5-6	Voltage Free

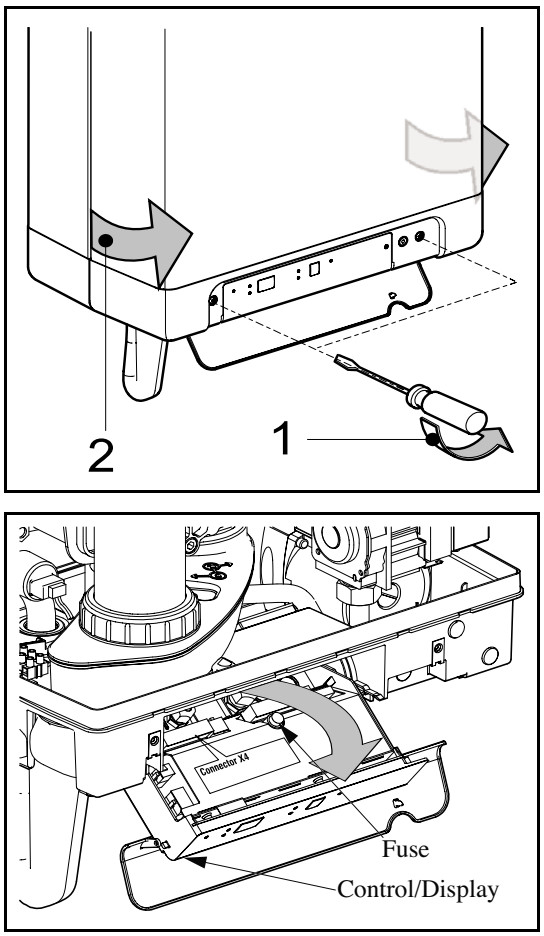

Fig. 17: Accessing Low Voltage X4 Connections

NOTICE

Isolate line voltage wiring from low voltage wiring to prevent any potential for electical noise.

10.8 Thermostat Wiring

1. Wire room thermostat or the zone panel end switch (isolated contact only) to the low voltage terminal strip, as shown in Fig. 16 on page 26.
2. Install the room thermostat on an inside wall away from influences of heat and cold, i.e. water pipes, areas of draft, lighting fixtures and fireplaces for proper operation.
3. Set the thermostat anticipator (if applicable) as follows:
   a. Set for 0.1 amps when wired directly to the CHALLENGER.
   b. Set to match the total electrical power requirements of the connected devices when wired to zone relays or other devices. Refer to the relay manufacturers' specifications for additional information on the anticipator setting.

10.9 Outdoor Temperature Sensor Wiring

NOTICE

When making low voltage connections to the CHALLENGER, ensure no external voltage is present in the thermostat circuits. If external voltage is present, use and isolation relay to prevent damage to the appliance control.

The outdoor reset function requires the connection of the included outdoor temperature sensor. See Section XIII for outdoor temperature sensor installation and wiring instructions.

10.10 SMART/COMFORT Aquastat Wiring

Wire SMART/COMFORT aquastat to the control module low voltage terminal strip, as shown in Fig. 16 on page 26.

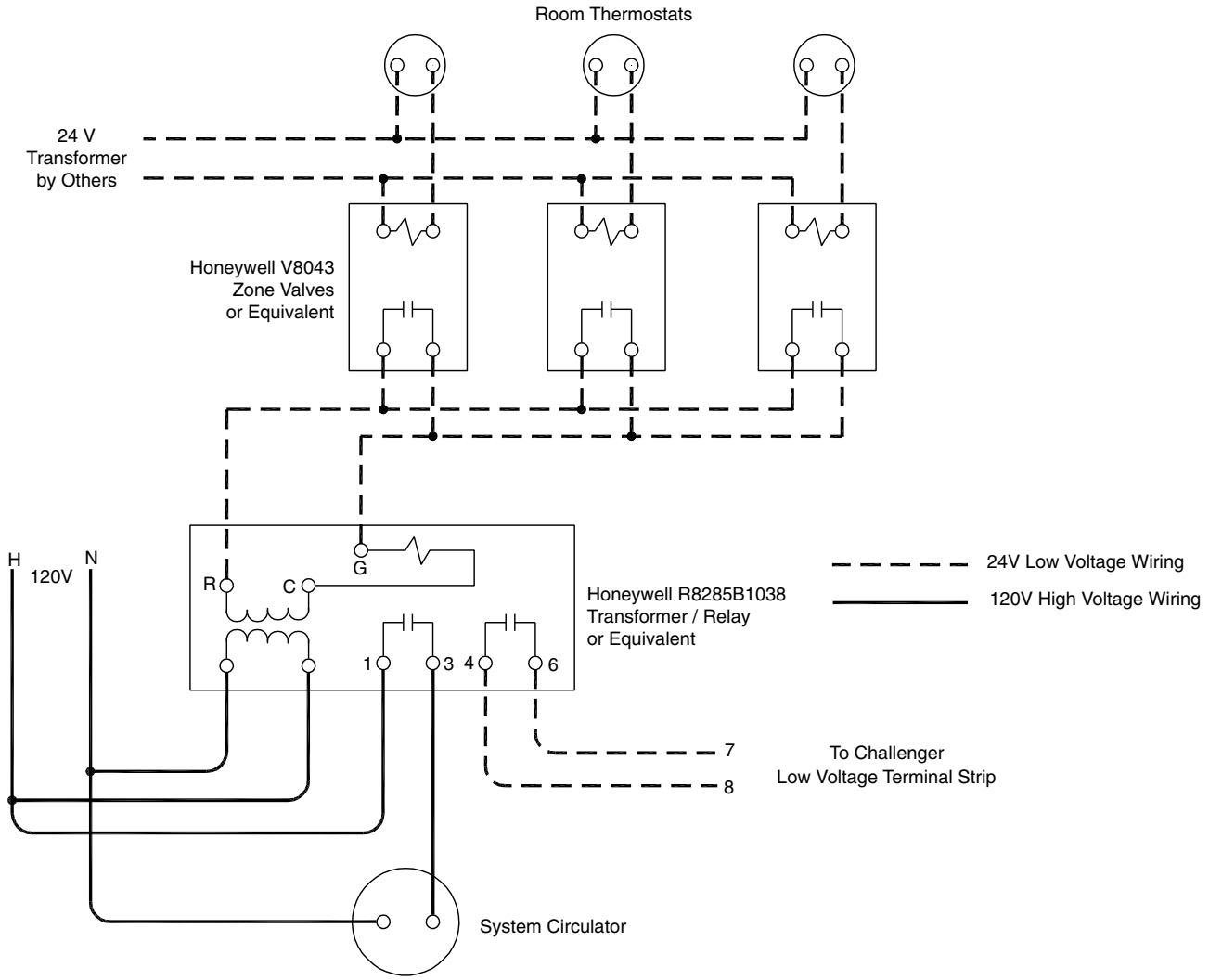

Fig. 18: System Circulator Wiring

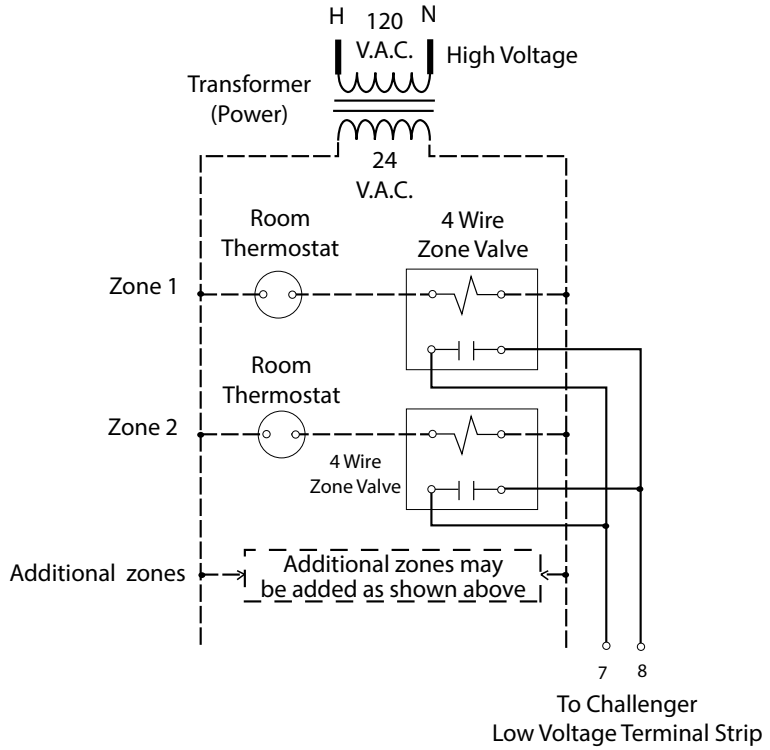

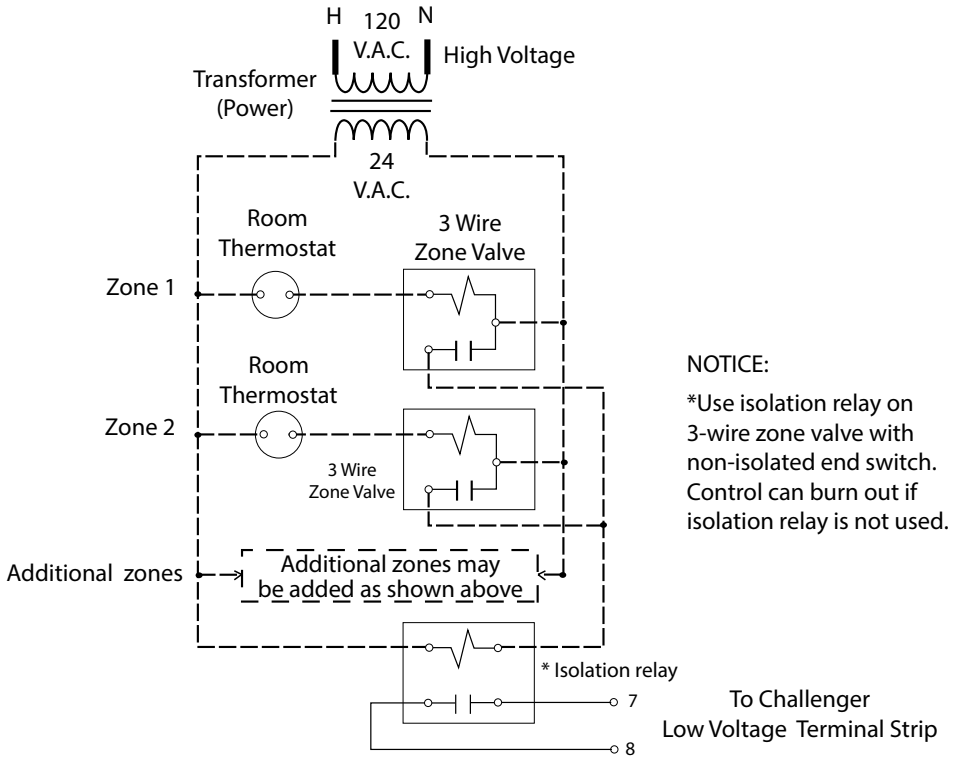

NOTICE:

*Use isolation relay on 3-wire zone valve with non-isolated end switch. Control can burn out if isolation relay is not used.

Fig. 19: Multiple Zone Field Wiring Using Zone Valves

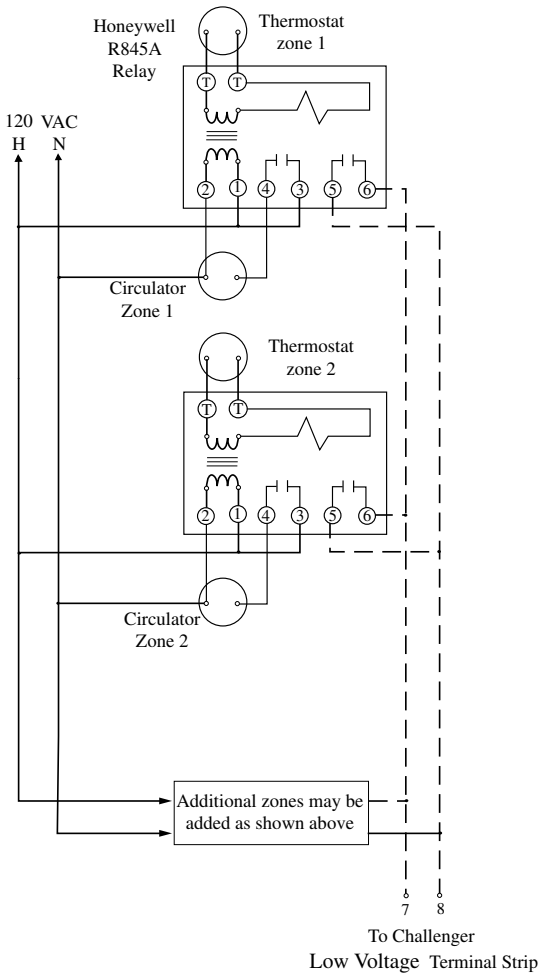

Fig. 20: Field Wiring with Zone Circulators

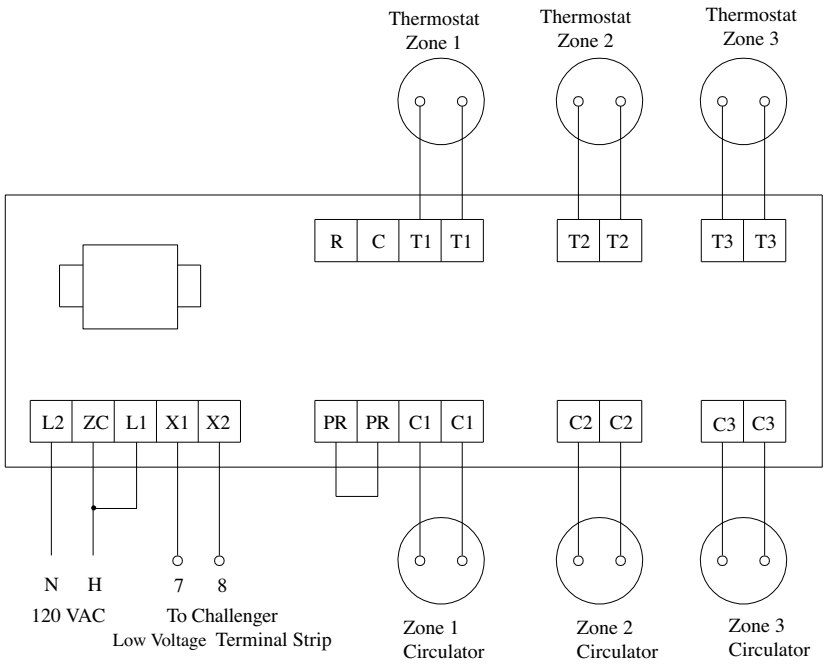

Fig. 21: Typical Zone Relay Panel Wiring

Section XI: Startup Preparation

11.1 Check Boiler System Water Chemistry

WARNING

Do not use petroleum-based cleaning or sealing compounds in the boiler system. Damage to seals and gaskets in the system could occur, resulting in substantial property damage.

NOTICE

System water including additives must be practically non-toxic, having a toxicity rating or Class of 1, as listed in Clinical Toxicology of Commerical Products.

11.1.1 Water pH Level

Maintain the boiler water pH between 6.5 and 8.5. Check using litmus paper or contact a water treatment company for a chemical analysis.

If the pH does not meet this requirement, do not operate the CHALLENGER or leave the appliance filled until the condition is corrected.

11.1.2 Water Hardness

Maintain the boiler water hardeness below 7 grains/gallon or 120 ppm [mg/l]. For areas with unusually hard water (above stated limit) consult a water treatment company.

11.1.3 Chlorinated Water

Do not use the CHALLENGER to heat a swimming pool or spa directly.

Maintain the chlorine level of the water at levels considered safe for drinking.

11.1.4 Antifreeze

For boiler systems containing antifreeze solutions, follow the antifreeze manufacturer's instructions in verifying the inhibitor level and to ensure the fluid characteristics are within specified requirements.

Due to degradation of inhibitors over time, antifreeze fluids must be periodically replaced. Refer to the manufacturer of the antifreeze for additional instructions.

NOTICE

System water including additives must be practically non-toxic, having a toxicity rating or Class of 1, as listed in Clinical Toxicology of Commerical Products.

11.2 Flush Boiler and Domestic System to Remove Sediment

The installer must flush the boiler systems to remove any sediment to allow proper operation of the CHALLENGER.

Flush the systems until the water runs clean and is free of sediment.

For zoned systems, each zone should be flushed through a purge valve. Purge valves and isolation valves should be installed on each zone to allow proper flushing of the system.

11.3 Use of Antifreeze in the Boiler System

WARNING

NEVER use automotive/ethylene glycol antifreeze or undiluted antifreeze in the boiler system. This can result in substantial property damage, serious injury, or death.

Determine the antifreeze fluid quantity using the system water content volume and following the antifreeze manufacturer instructions.

The boiler water volume of the CC105 is 0.42 gallons [1.6 l] and CC125 and CC125H is 0.50 gallons [1.9 l]. Remember to include this volume in sizing of the expansion tank.

Check with local code requirements for the installation of backflow preventers or actual disconnection from the boiler's cold water make up water supply line.

NOTICE

System water including additives must be practically non-toxic, having a toxicity rating or Class if 1, as listed in Clinical Toxicology of Commercial Products

Ensure the concentration of antifreeze to water does not exceed a 50/50 ratio.

NOTICE

Massachusetts Code requires the installation of a backflow preventer if antifreeze is used in the system.

11.4 Filling the Boiler System

1. Close the boiler drain valve located on the bottom of the appliance and any manual or automatic air vents in the system.
2. Open all system isolation valves.
3. Fill the boiler system to correct system pressure. Correct pressure will vary with each application.

NOTICE

Typical residential system fill pressure is 12 psi [0.8 bar]. System pressure will increase when system temperature increases. Operating pressure of the system should never exceed 25 psi [1.7 bar].

4. Purge air and sediment from each zone of the hydronic system through the purge valves. Open air vents to allow air to be vented from the zones.
5. Open manual air vent at the top of the unit. Once air has stopped escaping, close the manual air vent.
6. Once the system is completely filled and purged of all air and sediment, check the system pressure and check/repair any leaks.

WARNING

Unrepaired system leaks will cause continual makeup water to be added to the system. Continual makeup water could cause mineral buildup within the heat exchanger, reducing the heat transfer, causing possible heat buildup and eventual heat exchanger failure.

11.5 Check Low Water Cut Off

- The CHALLENGER is equipped with a factory installed pressure sensor type Low Water Cut Off (LWCO).
- The minimum operating CH system pressure is 7 psig [0.5bar]
- Compare CH system pressure gauge reading to CHALLENGER's control pressure display reading, which can only be viewed when control is ON and no CH call is present. Adjust system pressure accordingly.

11.6 Check for Gas Leaks

WARNING

Prior to startup and during initial operation, smell near the floor and around the appliance for gas odorant or any unusual odor. Do not proceed with the startup if there is any indication of a gas leak. Any leaks found must be repaired immediately.

WARNING

Propane Installations Only
The propane supplier mixes an odorant with the propane to make it's presence detectable. In some cases the odorant can fade and the gas may no longer have an odor.
Prior to startup of the appliance, and periodically after startup, have the propane supplier check and verify odorant level.

11.7 Check Thermostat Circuit

- Disconnect the external thermostat wires from the control terminal strip, located on the drop down panel.
- Connect a voltmeter across the wire ends of the external thermostat wiring.
- Energize each thermostat, zone valve, and relay in the external circuit individually and check the voltage reading across the wire ends.
- There should NEVER be voltage measured at the wire ends.
- If voltage is measure at the panel under any condition, check and correct the external wiring.
- Reconnect the external thermostat wires to the control terminal strip.

NOTICE

In systems using 3-wire zone valves, backfeed of voltage to the appliance is a common problem. Use an isolation relay to prevent voltage from the external circuit entering the CHALLENGER control panel.

11.8 Inspect Condensate Drain Assembly

1. Inspect and ensure the Condensate Drain Assembly is properly installed as described in Section 7.2 and shown in Fig. 13 on page 22.
2. Remove the Condensate Drain Assembly and fill with fresh water.

WARNING

The condensate drain assembly must be installed on the appliance and filled with water when the CHALLENGER is in operation. The condensate drain assembly prevents flue gas emissions from entering the condensate line. Failure to ensure trap is filled with water can result in severe personal injury or death.

3. Reinstall the Condensate Drain Assembly.

Section XII: Startup Procedures

12.1 Final Checks Before Startup

- □ Read Sections 12.5 through 13.4 regarding the operation of the CHALLENGER control.
- □ Verify the CHALLENGER and the boiler system are full of water and all system components are correctly set for operation, including the minimum flow rate through the boiler, 65-66
- □ Verify all Startup Preparation items outlined in Section 11 have been completed.
- □ Verify all electrical connections are correct and securely fastened.
- □ Inspect vent and combustion air piping for signs of deterioration from corrosion, physical damage or sagging. Verify combustion air and vent piping are intact and correctly installed and supported. Reference the proper CHALLENGER vent supplement.
- □ Verify burner configuration - gas orifice size.
  - Check for proper labeling on the gas valve (propane only) and the rating label for proper gas configuration.
  - If there is doubt on the burner configuration, remove the gas valve and check for proper gas orifice size. See Sections 8.2.3 and 8.3.3 for correct orifice sizes.
- □ Ensure the Condensate Drain Assembly is filled with water.

12.2 CHALLENGER Startup

1. Turn ON the electrical supply/service to the appliance. Press the ON/OFF button " ⏻ " located on the front control panel.
2. Read and follow the Operating Instructions outlined on page 35.

12.3 CHALLENGER Startup Troubleshooting

If CHALLENGER does not start correctly:

1. Verify DHW and CH systems are turned ON and parameter 1 is set to "0". Read Section 12.11 for more information.
2. Check for loose electrical connections, blown fuse (external or internal at the appliance control) or open service switch.
3. Is the external limit control (if applicable) open? Ensure the external limit is reset to the closed position.
4. Is the gas supply valve(s) open at the appliance and meter?
5. Is incoming gas supply pressure at the appliance more than 5"w.c. [13 mbar] and less than 13" w.c. [32 mbar] with all gas appliances ON or OFF.
6. Are the room thermostats set above room temperature?

If none of these conditions correct the problem, contact ACV - Triangle Tube Technical Support.

12.4 Check the CHALLENGER and System

1. Check Piping:
   a. Check heating system for leaks. If found, shut down the appliance and repair immediately.
   b. Purge any remaining air from the system. Air in the system will interfere with circulation, causing heat distribution problems and system noise.
2. Check Vent Piping and Combustion Air Piping
   a. Check for gas-tight seal at every connection and seam of the venting and combustion air piping.

DANGER

Venting system must be sealed gas-tight to prevent flue gas spillage and potential carbon monoxide emissions, which will result in substantial property damage, serious injury, or death.

3. Check Gas Piping
   a. Check around the appliance for gas odor following the procedure outlined in Section 11.6.

WARNING

If any gas leaks are found or suspected, shut down the appliance immediately. Use a gas detection device or bubble test to locate the source of the gas leak and repair at once. Do not operate the appliance until the leak is corrected. Failure to comply with this procedure can result in substantial property damage, serious injury, or death.

4. Verify Flame Pattern and Combustion
   a. Check the flame pattern through the inspection port on the left side of the heat exchanger. The flame should be blue and stable over the length of the burner.

WARNING

The combustion testing and adjustments must be performed by a qualified installer, service agency, or the gas supplier. All combustion measurements must be performed with calibrated equipment to ensure proper reading and accuracy.

   b. Test for CO_2 or O_2 and for CO during high and low firing rate. Reference High Fire Test Mode, Section 12.10.4, and Low Fire Test Mode, Section 12.10.5 for procedure to manually place unit into high or low fire. The combustion readings should be within the range listed in Table 5 on page 34. The CO level should not exceed 100 ppm for natural gas or 150ppm for propane gas.

WARNING

The combustion levels must be measured at high and low firing rates. If the combustion levels are not within the range given in Table 5, shut down the appliance and contact ACV - Triangle Tube Technical Support. Failure to comply with this requirement can result in substantial property damage, serious injury, or death.

Table 5: Recommended Combustion Levels

Combustion Levels		Natural Gas	Propane Gas
High Fire DOOR OFF*	CO_2 Range	9% - 10.1%	10.5% - 11.1%
	CO_2 Target	9.0%	10.8%
	O_2 Range	3.0% - 5%	4.1% - 5.0%
	O_2 Target	5.0%	4.5%
Low Fire	CO_2 Range	0% - 0.4% <H.F. 9.0%	0% - 0.4% <H.F. 10.5% min.
	O_2 Range	0% - 0.6% > H.F. 5.0% max.	0% - 0.6% > H.F. 5.0%max.
	CO Max.	100 ppm	150 ppm
* Door On can raise the maximum allowable CO_2 by 0.4 or lower the minimum O_2 by 0.6			

5. Measure Input - Natural Gas Only
   a. Ensure the appliance is firing at maximum firing rate. Reference High Fire Test Mode, Section 12.10.4, for procedure to manually place the unit into high fire
   b. Turn off all gas appliances on the gas service, except the CHALLENGER.
   c. Operate the CHALLENGER for approximately 10 minutes
   d. At the gas meter, record the time required to use one cubic foot of gas.
   e. Calculate Natural Gas Input using the following equation:
      3600 * 1000 / Seconds for 1 cubic ft of gas = BTU/hr
   f. The BTU/hr calculated should approximate the input rating listed on the appliance.

12.5 Appliance ON/OFF

1. Turn appliance ON/OFF using the ⏻ ON/OFF button.
2. When appliance is ON, the green LED above the ⏻ ON/OFF button will be lit. The main display will show the water pressure followed by "P" when there is no heat demand.
3. When the appliance is OFF, the green LED above the ⏻ ON/OFF button will not be lit. The main display will show "OFF" and the operating display will show **–** .

12.6 Set Boiler Maximum Central Heating (CH) Set Point Temperature

1. Press the CH/DHW/Parameter button "🌡" on the display panel for approximately 2 to 3 seconds until the radiator symbol "▥" LED lights up and the main display begins to flash.
2. Press the **+** or **–** buttons to set the desired maximum temperature setting on the main display.
3. Press the ↑ reset button to close the setting menu and store the changes.

NOTICE

If the ↑ reset button is not pressed within 30 seconds, the parameter menu is automatically closed and the changes are stored.

If the ⏻ ON/OFF button is pressed prior to the ↑ reset button, the parameter menu is closed and the changes are NOT stored.

12.7 Operation Verification - Space Heating

NOTICE

Digits and characters shown below in brackets represent the control module operating display.

1. Set the room thermostat to the lowest setting.
2. Turn off power to the appliance, wait a few seconds and turn on power to the appliance.
3. The following operating displays should occur:

   [A] Self check on power up

   [ ] No call for heat
4. Initiate a call for heat by raising the set point of the room thermostat to the highest setting. The following operating display should occur:

   [1] This is the prepurge cycle. The burner blower and the CH circulator become energized. The blower has a 5 second prepurge cycle.

   [2]This is the ignition cycle. The control module will open the gas valve and begin the spark for ignition.
   a. If the burner lights and the flame is proven, the burner will begin to modulate.
   b. If the burner fails to light or the flame is not proven, the control module will repeat the ignition sequence after approximately 15 seconds . If the flame is not established after four attempts, the control will lockout. The main display will show [4] and the fault LED above the ↑ reset button will flash and [E] will flash in the operating display.
   c. To verify flame failure safety lockout, close the manual shut off valve on the gas supply piping to the appliance and repeat the ignition sequence. When verification is complete, ensure the manual shut off valve is returned to the open position.

   [3]This is the normal Central Heating (CH) operation cycle. The control module will begin to modulate the burner firing rate based on actual appliance outlet temperature and the set point temperature. The CH water temperature is displayed on the main display.

FOR YOUR SAFETY READ BEFORE LIGHTING

WARNING **If you do not follow these instructions exactly, a fire or explosion can result causing substatial property damage, serious injury or loss of life.**

A. This appliance does not have a pilot. It is equipped with an ignition device which automatically lights the burner. DO NOT try to light the burner by hand.

B. BEFORE OPERATING, smell all around the appliance area for gas. Be sure to smell next to the floor because some gas is heavier than air and will settle on the floor.

WHAT TO DO IF YOU SMELL GAS

- Do not try to light any appliance
- Do not touch any electrical switch; do not use any phone in your building.
- Immediately call your gas supplier from a neighbor's phone. Follow the gas supplier's instructions.
- If you cannot reach your gas supplier, call the fire department.

C. Use only your hand to turn the external manual gas valve. Never use tools. If the valve will not turn by hand, do not try to repair it. Call a qualified service technician. Force or attempted repair may result in a fire or explosion.

D. Do not use this appliance if any part has been under water. Immediately call a qualified service technician to inspect the appliance and to replace any part of the control system and any gas control which has been under water..

OPERATING INSTRUCTIONS

1. STOP! Read the safety information above. This appliance is equipped with an ignition device which automatically lights the burner. DO NOT try to light the burner by hand.
2. Set room thermostat(s) to lowest setting. Turn the external manual gas valve handle clockwise ↷ "CLOSE" (valve handle shall be perpendicular to gas piping).
3. Turn "OFF" all electrical power to the appliance.
4. Remove the front jacket panel on the appliance.
5. Turn the external manual gas valve handle counter clockwise ↶ to "OPEN" gas supply (valve handle shall be parallel to gas piping).
6. Wait five (5) minutes to clear out any gas. If you then smell gas in the jacket enclosure or around the appliance, STOP! Follow "B" in the safety information above. If you don't smell gas, go to the next step.
7. Turn "ON" all electric power to the appliance. Push ON/OFF button on the CHALLENGER control panel display until LED above button is lit.
8. Set room thermostat(s) to desired setting(s).
9. The CHALLENGER control panel display will show a sequence of numbers (1,2,3,4) as the right digit. Sequence digit 3 or 4 indicates the appliance is firing. A blank display means there is no call for heat (all external thermostats are satisfied).
10. If the appliance will not operate with a call for heat and the system piping is not hot, follow the instructions "To Turn Off Gas to Appliance", below and call your service technician or gas supplier.
11. Replace the front jacket panel. Make sure the panel is seated firmly in place and all mounting screws are tightened.

TO TURN OFF GAS TO APPLIANCE

1. Set the room thermostat to lowest setting.
2. Turn "OFF" all electrical power to the appliance if service is to be performed.
3. Turn the external manual gas valve handle clockwise ↷ to "CLOSE" (valve handle shall be perpendicular to gas piping).

5. Allow the appliance to operate and the boiler outlet temperature to reach the set point temperature.

   [1] The setpoint temperature has been reached. Combustion will cease and the post purge cycle of the blower begins. The control module will de-energize the gas valve and the blower will continue to run during the 10 second post purge cycle, before shutting down. The CH circulator will continue to run until the room thermostat is satisfied.

6. Lower the room thermostat set point below the room temperature to end the call for heat.

   [1] This begins a post purge cycle. When the room thermostat is satisfied, the appliance will shutdown.

   [7] The CH circulator will continue to run for a 1 minute post pump cycle.

   [ ] The appliance is in Standby, waiting for a call for heat.

7. Verify the operation of the appliance by repeating the

NOTICE

The CH circulator automatically runs for 10 seconds once every 24 hours to prevent seizing. Timing for this automatic exercising starts after the last call for heat.

operational sequence several times.

8. Return the room thermostat to the desired setting

12.8 Set DHW Set Point Temperature

- Press the CH/DHW/parameter button " " on the display panel for approximately 2 to 3 seconds until the faucet " " (DHW) LED lights up and the main display begins to flash.
- Press the + or - buttons to set the desired domestic water temperature on the main display. Minimum setting is 104°F [40°C]. Maximum setting is 149°F [65°C], factory default is 120°F [49°C].
- Press the reset " " button to close the setting menu and store the changes.

NOTICE

If the reset button is not pressed within 30 seconds, the parameter menu is automatically closed and the changes are stored.

If the ON/OFF button is pressed prior to the reset button, the settings menu is closed and the changes are NOT stored.

12.9 Operation Verification - Domestic Hot Water

NOTICE

Digits and characters shown in brackets [0] represent the control module operating display

1. Set the room thermostat to the lowest setting.
2. Turn off power to the appliance, wait a few seconds and turn on power to the appliance.
3. The following operating displays should occur:

   [A] Self check on power up

   [ ] No call for heat

4. Turn on a domestic hot water faucet to initiate a domestic call. The display should show:

   [1] This is the prepurge cycle. The burner blower will become energized. The blower has a 5 second prepurge cycle. The CH (central heating) circulator will remain off, to provide DHW priority.

   [2] This is the ignition cycle. The control module will open the gas valve and begin the spark for ignition.

   a. If the burner lights and the flame is proven, the burner will begin to modulate.

   b. If the burner fails to light or the flame is not proven, the control module will repeat the ignition sequence after approximately 15 seconds. If the flame is not established after four attempts, the control will lockout. The main display will show [4] and the fault LED above the reset button will flash and [E] will flash in the operating display.

   c. To verify flame failure safety lockout, close the manual shut-off valve on the gas supply to the appliance and repeat the ignition sequence. When verification is complete, ensure the manual shutoff valve is returned to the open position.

   [4] This is the normal DHW operation cycle. The control module will begin to modulate the burner firing rate based on actual DHW outlet water temperature and the setpoint temperature. The DHW water temperature is displayed on the main display.

5. Turn off the domestic hot water faucet to end the call for heat

   [1] This begins a post purge cycle. The control module closes the gas valve and the blower continues to operate for approximately 10 seconds.

6. Verify the DHW operation by repeating the outlined operation sequence several times.

12.10 Control Display

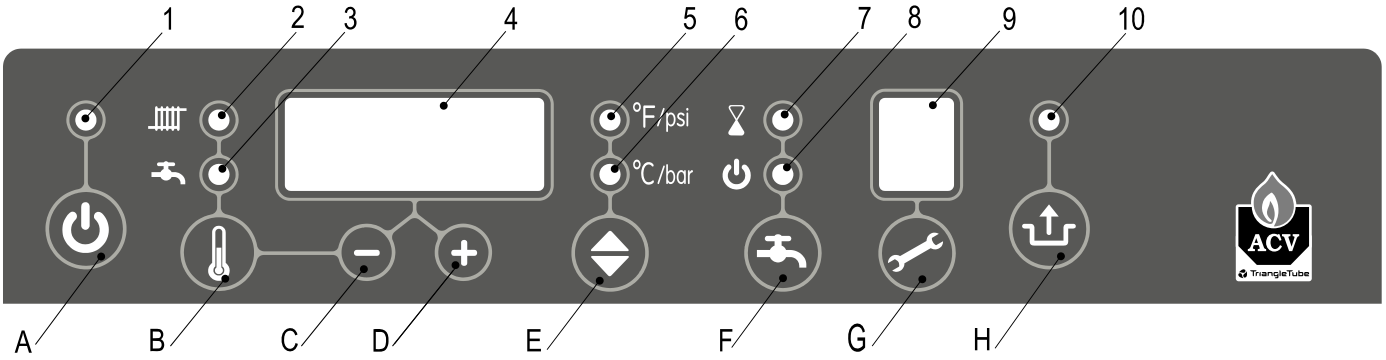

Read-Out

1. On/Off (Lit when on)
2. CH operation or setting maximum CH temperature
3. DHW operation or setting DHW temperature
4. Main display with temperature or water pressure or fault code
5. Temperature °F or pressure psi
6. Temperature °C or pressure bar
7. DHW eco function
8. DHW minimum temperature function on
9. Operating display
10. Flashes to indicate fault

Operation

A. On/Off
B. Parameter
C. Decrease
D. Increase
E. Units U.S. customary or metric
F. DHW Function
G. Service
H. Reset/store

12.10.1 Appliance ON/OFF

1. Turn appliance ON/OFF using the ⏻ ON/OFF button.
2. When appliance is ON, the green LED above the ⏻ ON/OFF button will be lit. The main display will show the water pressure followed by "P" when there is no heat demand.
3. When the appliance is OFF, the green LED above the ⏻ ON/OFF button will not be lit. The main display will show "OFF" and the operating display will show – .

12.10.2 Units

Press Up/Down arrow button to change the displayed units from U.S. Customary (°F & psi) to metric (°C & bar). The °F/psi LED will be lit for U.S. Customary units or °C/bar LED will be lit for metric units.

NOTICE

Units cannot be changed if the main display or operating display is flashing.

12.10.3 DHW Operating Modes

Three DHW operating modes can be activated pressing the DHW function button.

1. ON (⏻ LED lit above the DHW button) The appliance will always maintain a minimum heat exchanger temperature to assure instant delivery of hot water.
2. ECO (⌛ LED lit above the DHW button) The appliance will learn when to maintain a minimum heat exchanger temperature during times with typical domestic demands, learned over the past 3 days of use.
3. OFF (no LED lit) - The appliance will not maintain a minimum heat exchanger termperature. This will delay the delivery of hot water.

BEST PRACTICE

In applications in which the DHW is not utilized or the DHW demand is minimal, set the DHW function to OFF

12.10.4 High Fire Test Mode

Press both the " 🔧 " and "+" buttons simultaneously once until the operating display shows "h" or twice until the operating display shows "H" for high fire.

12.10.5 Low Fire Test Mode

Press both the " 🔧 " and " – " buttons simultaneously until operating display shows "L".

12.10.6 Test Mode Operation

While in the test mode:

1. High temperature limit will function
2. Appliance CH circulator will function
3. The test mode will time out after approximately 10 minutes

Press both the "+" and "-" buttons simultaneously to deactivate high/low fire test mode.

12.10.7 Flame Current

While in high fire or low fire test modes, the flame current (µA) can be checked at the control by pressing and holding the " " DHW button.

12.10.8 Control Software Version

To view the control software version cycle the incoming power to the CHALLENGER off then on.

12.10.9 Control Display Table

Main Display	Operating Display	Function
OFF	—	Press button to turn appliance ON, LED light above button will be lit when appliance is ON.
XXP		No demand for heat
XXP	A	Control self-test
XXX	1	Fan pre purge or post purge cycle
XXX	2	Ignition sequence
XXX	3	Burner ON for space heating (CH)
XXX	4	Burner ON for domestic hot water (DHW)
XXX	6	Burner OFF due to reaching temperature setpoint
	7	Space Heating (CH) post pump cycle
	8	Burner ON for DHW pre-heating
	9	Burner ON for freeze protection
LOP*		Raise CH pressure above 7 psig [0.5 bar]
ODS**		Outdoor sensor not installed
POLE		Incoming line and neutral are reversed

The LED will be lit for CH (central heating call)

The LED will be lit for DHW (domestic hot water call)

NOTICE

"X" represents temperature or pressure readings. When temperature is displayed it will be followed by "°F" or "°C" in the main display and the appropriate LED will be lit. When pressure is displayed it will be followed by a "P" in the main display. Pressure can only be read when the operating display is blank or shows a "A".

* If factory installed CH Low Water Cut Off (LWCO) is below 7 psig [0.5 bar] the main display will flash a soft lockout of LOP (burner and CH primary pump is blocked) followed by the pressure reading. Once CH system pressure is increased above 7 psig [0.5 bar] normal boiler operation will be restored. Check LWCO wiring if LOP flashes to 90 _P (PSI) or 6.0 _P (bar).

** If the outdoor sensor is not installed the main display will display ODS when the boiler is in standby without a CH or DHW call for heat or any errors. The lack of the outdoor sensor will not prevent the unit from operating on a CH or DHW

12.11 Setting the Appliance Parameters

1. Press the " 🌡 " button at the display panel for approximately 2 to 3 seconds until main display begins to flash.
2. Press the " 🌡 " button repeatedly to scroll through the list of parameters. The operating display will show the parameter number and the main display will show the parameter setting.
3. To modify a parameter, press the " + " or " – " buttons.
4. Press the " 🌡 " button to advance to the next parameter to be changed.
5. After all parameters have been changed, press the reset button to close the parameter menu and store the changes. The main display will go blank and a P will be displayed in the operating display to indicate the parameter changes have been stored.

NOTICE

If the reset button is not pressed within 30 seconds, the parameter menu is automatically closed and the changes are stored.

If the ON/OFF button is pressed prior to the reset button, the parameter menu is closed and the changes are NOT stored.

Main Display		Operating Display		
LED (Flashing)	Factory Settings	Parameters (Flashing)	Description	Adjustments
	186ºF [86ºC]		Boiler set point temperature	Adjustment range 86ºF to 194ºF [30ºC to 90ºC]
	140ºF [60ºC]		DHW Setpoint	Adjustment range 104ºF to 149ºF [40ºC to 65ºC]
	0	1	Installation type	0=Combi (Heat and DHW) 1=Heating + SMART/COMFORT I.F.W.H. ② 2=DHW only (no heating system required) 3=Heating only
	0	2	CH pump continuous	0=Intermittent pump on for heat and post purge 1=Pump continously active except during DHW call or if outside temperature is above parameter 7 with the outdoor sensor installed - Warm Weather Shut Down.
	86ºF [30ºC]	5	Min. supply temperature of the heat curve	Adjustment range 60°F to 140°F [16ºC to 60ºC]
	0ºF [-18ºC]	6	Min. outside temperature of the heat curve	Adjustment range -22°F to 50°F [-30ºC to 10ºC]
	64 ºF [18ºC]	7	Max. outside temperature of the heat curve	Adjustment range 60°F to 78°F [16ºC to 26ºC]
	1	8	CH pump post purge period	Adjustment range 0 to 15 minutes
	1	9	DHW post pump ③	Adjustment range 0 to 15 minutes
	0	o	DHW to CH anti-cycle time ④	Adjustment range 0 to 15 minutes
	0	P	Anti-cycling period during CH operation ①	Minimal switch-off time in CH operation Adjustable from 0 to 15 minutes
	0	P.	DHW Flow Device Selection	0 = All CHALLENGER Solo 30 = CC105 36 = CC125 & CC125H

① The anti-cycle time starts when burner shuts down during a CH call due to boiler water reaching the boiler set point temperature plus a 6ºF [3ºC] differential. The CH circulator will continue to operate while the burner is blocked.

② For installations with an optional ACV- Triangle Tube SMART Indirect Fired Water Heater (I.F.W.H.) piped off the primary loop, similar to Figures 7 and 8 on page 15, parameter 1 should be set to 1. The I.F.W.H. aquastat should be wired to CHALLENGER's X4-5 and X4-6 electrical connector, see Figure 12, page 21. The domestic I.F.W.H. circulator should be wired using the CHALLENGER's 120 V terminals 4 (line), 5 (neutral) and 6 (ground). During a domestic call for heat on terminals X4-5 and X4-6, only the domestic I.F.W.H. circulator will operate and the boiler's target supply water temperature will shift to 186°F [86°C].

③ The DHW post pump function only applies when parameter 1 is set to a setting of 1 Heating & Smart I.F.W.H. and only occurs if no CH call for heat is present.

④ The anti-cycling time starts at the end of the DHW call and blocks the burner and CH circulator. If DHW function is turned ON ("⏻" LED is lit above the "🚰" DHW button) or ECO is ON ("⌛" LED is lit abobve "🚰" DHW button) then the burner will continue to fire for DHW until a minimum heat exchanger temperature is achieved. Burner and CH circulator will continue to be clocked until the remaining wait time ends. This feature only applies if parameter 1 is set to 0.

12.12 Error Mode

If a boiler fault occurs, the CHALLENGER enters a hard lockout condition which requires a manual reset by pressing the reset button. A hard lock is indicated by a flashing [E] on the operating display as well as a flashing LED above the reset button. The error code is shown on the main display. The error must be corrected before the control will reset.

CAUTION

The appliance freeze protection feature is disabled during a Hard Lockout, however the CH circulator will operate.

CAUTION

During a hard lockout or low water condition the appliance will not re-start without service. If the heating system is left unattended in cold weather appropriate safeguards or alarms should be installed to prevent property damage.

12.13 Fluctuating DHW Temperature

Domestic water temperatures can fluctuate when the domestic hot water flow is less than 0.7 gpm. The fluctuation is due to the interaction between the minimum domestic hot water flow rate of 0.5 gpm and the domestic hot water mixing valve. As the domestic hot water leaving the appliance approaches the domestic hot water mixing valve setting, the mixing valve reduces the amount of hot water through the appliance. The appliance cycles off when water flow through the appliance dips below 0.5 gpm. To improve the domestic hot water performance at low flows it is recommended to reduce the domestic hot water temperature setpoint on the control down from 140°F (60°C) to 125°F (52°C), see Section 12.8, or to turn domestic function on the control to ON or ECO, see Section 12.10.3. Additionally, ensure the minimum domestic water pressure is 40 psi (3.8 bar). A lower domestic hot water setpoint will reduce the domestic hot water temperature at higher domestic flows.

Table 6: 12 kOhm NTC Sensor Resistance

Temperature (°F)	Temperature (°C)	NTC (kOhm)
-22	-30	171.70
-4	-20	98.82
14	-10	58.82
32	0	36.10
50	10	22.79
68	20	14.77
78	25	12.00
86	30	9.81
104	40	6.65
122	50	4.61
140	60	3.25
158	70	2.34
176	80	1.71
194	90	1.27
212	100	0.95

12.14 Error Codes

Red LED above the reset button will flash. Correct condition first, then press the reset button.

12.15 Warning Codes

In situations where the boiler takes a preventative action without going into a hard lockout, a warning code flashes in the main display. The warning code will alternate with the normally displayed value. The cause of the warning code should be investigated and corrected immediately to return the boiler to full functionality.

Main Display	Operating Display (Flashing)	Error Description	Possible Solution
10, 11, 12, 13, 14	E	CH supply sensor fault	• Check wiring for break • Check for proper flow direction • Replace supply sensor • E10 Open sensor • E 11 Shorted sensor • E12 Decreased too quickly • E13 Increased too quickly • E14 Stuck
20, 21, 22, 23, 24	E	CH return sensor fault	• Check wiring for break • Check for proper flow direction • Replace return sensor • E 20 Open sensor • E 21 Shorted sensor • E22 Decreased too quickly • E23 Increased too quickly • E24 Stuck
0	E	Sensor fault after self check	• Replace supply and/or return sensors
1, 28	E	Temperature too high	• Air in system • Pump not running • Insufficient water flow, shut off valves closed, pump setting too low • Flow switch sticking or miss-installed • Check for wiring error
2	E	Supply sensor and return sensor swapped	• Check for proper flow direction • Replace supply and/or return sensors
4	E	No flame signal	• Manual gas shut off valve closed • Remove air from gas pipe • Gas supply pressure too low • Gas valve or ignition unit not powered • Incorrect ignition gap • Check adjustment of gas valve
5	E	Poor flame signal	• Condensate drain blocked • Check adjustment of gas valve
6	E	Flame detection fault	• Replace ignition cable • Replace ignition unit at gas valve • Replace boiler controller
8	E	Incorrect fan speed	• Fan rubbing on cabinet • Wiring between fan and cabinet • Check wiring for poor contact • Replace fan
29,30	E	Gas valve relay fault	• Replace boiler controller
18, 19	E	Flue sensor fault	• E18 Open sensor • E19 Shorted sensor • Check/Replace flue sensor
7,16, 17	E	DHW sensor fault	• E16 Shorted sensor • E17 Open sensor • Check/replace DHW sensor • E7 Excessive temperature • Check gas orifice • Check combustion settings
50F		Improper power frequency	• Verify ground • Frequency should be between 45 and 65 Hz
E101		Flue gas temperature approaching limit	• Supply water temperature too high • Check positioning of flue gas sensor • Ambient temperature too high • Check heat exchanger for debris • Replace flue gas temperature sensor
E105		Outdoor Sensor Short	• Check wiring • Replace outdoor sensor

Section XIII: Outdoor Reset Control

An outdoor reset function is included in the CHALLENGER control. The use of the outdoor reset function is required to optimize boiler efficiency, see notice below. If the outdoor sensor is not installed, ODS will be displayed. This display will not prevent the appliance from operating. The ODS display will automatically reset once the outdoor sensor is installed.

NOTICE

In accordance with Section 325 (f) (3) of the Energy Policy and Conservation Act, this boiler is equipped with a feature that saves energy by reducing the boiler water temperature as the heating load decreases. This feature is equipped with an override which is provided primarily to permit the use of an external energy management system that serves the same function.

THIS OVERRIDE MUST NOT BE USED UNLESS AT LEAST ONE OF THE FOLLOWING CONDITIONS IS TRUE:

1. **An external energy management system is installed that reduces the boiler water temperature as the heating load decreases.**
2. **This boiler is not used for any space heating**
3. **This boiler is part of a modular or multiple boiler system having a total input of 300,000 BTU/hr or greater.**
4. **This boiler is equipped with a tankless coil.**

13.1 Mounting the Outdoor Sensor

1. Remove the front cover and mounting screws / anchors from the sensor enclosure.
2. When mounting the enclosure, the exterior wall selected should represent the coldest outdoor temperature. Typically a northern or northeastern wall will suit most buildings. A southern facing wall may suit buildings that have large glass walls or windows on the southern face.
3. Ensure the sensor enclosure is shielded from direct sunlight or the effects of heat or cold from other sources (exhaust fans, appliance vents...) to prevent false temperature sensing.
4. Mount the sensor enclosure at an elevation on the exterior wall to prevent accidental damage or tampering.
5. Avoid mounting the enclosure in areas subjected to excessive moisture.
6. Once an area on the exterior wall has been determined use the enclosure as a template to mark the location of the mounting screws.
7. Using a 3/16" [5 mm] drill bit, drill 2 pilot holes on the marked locations.
8. Tap the enclosed plastic anchors into the pilot holes. Use care not to damage the anchors.
9. Mount the sensor enclosure using the screws provided.

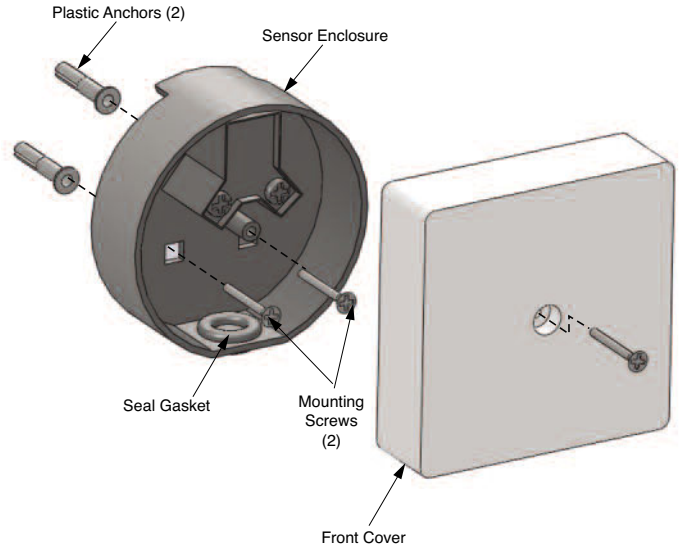

Fig. 22: Outdoor Sensor Enclosure and Components

13.2 Wiring the Outdoor Sensor

1. Route two 18 gauge wires through the seal gasket. Connect the wires to sensor terminals 1 and 2.
2. Route the sensor wire back to the CHALLENGER, ensuring the wires are not run parallel to telephone or power cables.

NOTICE

If the sensor wires are located in an area with sources of potential electromagnetic interference (close to 120 V wiring) the sensor wires should be shielded or the wires should be routed in a grounded metal conduit. If using shielded cable, the shielding should be connected to the common ground of the appliance.

3. Connect the sensor wires to the outdoor sensor terminals 9 and 10 of the low voltage X4 connector located on the control (see appliance wiring diagram, Fig. 16 on page 26).

13.3 Adjusting Outdoor Reset Curve

The appliance CH set point along with Parameters 5, 6, and 7 define the settings of the outdoor reset curve. See Graph 1 and Table 7, on page 43, for an example of modifying the outdoor reset curve.

13.3.1 CH Maximum Boiler Temperature

Factory Setting	Minimum Setting	Maximum Setting
186°F [86°C]	86°F [30°C]	194°F [90°C]

If an outdoor temperature sensor is not connected to the appliance, the appliance setpoint for a heating call will be set to the CH Maximum Boiler Temperature. If an outdoor temperature sensor is connected, the CH Maximum Boiler Temperature becomes the appliance setpoint on the CH Reset Curve Coldest Day.

13.3.2 CH Minimum Boiler Temperature (Parameter 5)

Factory Setting	Minimum Setting	Maximum Setting
86°F [30°C]	59°F [16°C]	140°F [60°C]

This parameter is not applicable if an outdoor sensor is not connected to the appliance. When an outdoor temperature sensor is connected, the CH Minimum Boiler Temperature becomes the appliance setpoint on the CH Reset Curve Warmest Day.

13.3.3 CH Reset Curve Coldest Day (Parameter 6)

Factory Setting	Minimum Setting	Maximum Setting
64°F [18°C]	59°F [16°C]	77°F [26°C]

This parameter is not applicable if an outdoor sensor is not connected to the appliance. When an outdoor temperature sensor is connected, the CH Reset Curve Coldest Day is the coldest design temperature of the heating system.

13.3.4 CH Reset Curve Warmest Day (Parameter 7)

Factory Setting	Minimum Setting	Maximum Setting
00°F [-18°C]	-22°F [-30°C]	50°F [10°C]

This parameter is not applicable if an outdoor sensor is not connected to the appliance. When an outdoor temperature sensor is connected, the CH Reset Curve Warmest Day is the warmest design temperature of the heating system.

13.4 Changing Outdoor Reset Parameters

1. Press the " 🌡 " button at the display panel for approximately 2 to 3 seconds until main display begins to flash.
2. Press the " 🌡 " button repeatedly to scroll through the list of parameters. The operating display will show the parameter number and the main display will show the parameter setting.
3. To modify a parameter, press the " + " or " − " buttons.
4. Press the reset button to close the parameter menu and store the changes.
5. The appliance control module has now been reprogrammed with the desired outdoor reset parameter values.

NOTICE

Pressing the ⏻ ON/OFF button will exit the parameter mode without storing the parameter changes.

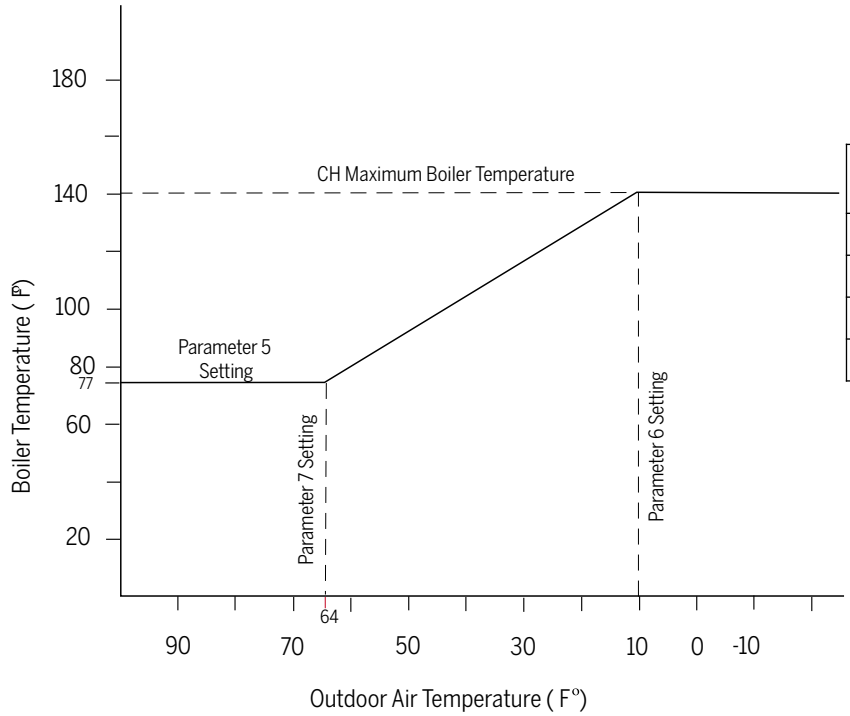

Graph 1: Outdoor Air Temperature Reset Curve Example

Table 7: Outdoor Air Temperature Reset Example

Outdoor Temperature	Appliance Target Temp. Based on Outdoor Temp.
10°F or Lower	140°F
30°F	117°F
50°F	93°F
64°F or Higher	77°F

Section XIV: Checkout Procedures

NOTICE

Perform the following checkout procedures as outlined and checkoff items as completed. When procedures are completed, the installer should complete the installation record on page 45.

- □ Boiler system water chemistry checked and verified as outlined in Section 11.1.
- □ Any automatic air vent caps within the system are open one full turn.
- □ Air is purged from the heating zones and appliance system piping.
- □ Confirm the appliance has proper gas orifice as noted in Sections 8.2 & 8.3.
- □ Thermostat circuit wiring checked and verified that no voltage is present to the low voltage terminals as outlined in Section 11.7.
- □ Operating Instructions on page 35 were followed during startup.
- □ Combustion levels and flame pattern verified as outlined in Section 12.4.
- □ Measured the Natural Gas input rate as outlined in Section 12.4.
- □ Checked the incoming gas pressure to the CHALLENGER to ensure a minimum pressure of 5"w.c [13 mbar] during flow conditions to all gas appliances and a maximum pressure of 13"w.c [32 mbar] during non-flow conditions for Natural and Propane gas.
- □ Adjusted balancing valves and system limit controls to provide design temperatures to the space heating system.
- □ In multiple zone applications, adjusted for correct flow of water to each zone.
- □ Checked and verified room thermostat(s) function properly and the thermostat(s) heat anticipator (if used) was properly set.
- □ Observed several operating cycles for proper operation of the CHALLENGER and the system.
- □ Set the room thermostat(s) to the desired room temperature.
- □ Reviewed all instructions shipped with the CHALLENGER with the homeowner or maintenance personnel.
- □ Completed the Installation Record in Section XV.
- □ Ensure all manuals and other documents are returned to the Installation envelope and given to the owner for safekeeping.

Section XV: Installation Record

CHALLENGER Model Number: _____

Serial Number: _____

Date of Installation: _____

Fuel: ☐ Natural Gas ☐ Propane

Measured Rate of Input: _____ Btu/hr

Combustion Readings:

CO_2 _____ %

O_2 _____ %

CO _____ ppm

The following items were completed during installation:

- ☐ Installation instructions have been followed and completed
- ☐ Check-out procedures have been followed and completed
- ☐ Information regarding the unit and installation received and left with owner / maintenance personnel.

Installer Information

(Company) _____

(Address) _____

(Address) _____

(Phone Number) _____

Section XVI: Maintenance Schedule

16.1 Service Technician

At least on an annual basis the following maintenance should be performed by a qualified service technician.

16.1.1 General

1. Attend to any reported problems.
2. Inspect the interior of the appliance jacket area; clean and vacuum if necessary.
3. Clean the condensate drain assembly and fill with fresh water.
4. Check for leaks: water, gas, flue and condensate.
5. Verify flue vent piping and air inlet piping are in good condition, sealed tight and properly supported.
6. Check appliance water pressure, piping and expansion tank.
7. Check control settings.
8. Check ignition electrode (sand off any white oxide; clean and reposition).
9. Check ignition wiring and ground wiring.
10. Check all control wiring and connections.
11. Check burner flame pattern (stable and uniform).

16.1.2 Poor Combustion or Performance

1. Clean heat exchanger and flue ways.
2. Remove burner assembly and clean inside of burner head using compressed air only.

Once the maintenance items are completed, review the service with the owner.

16.2 Owner Maintenance

16.2.1 Periodic

1. Check the area around the appliance.
2. Check and remove any blockage from the combustion air inlet and ventilation openings.
3. Check the temperature and pressure gauge.

16.2.2 Monthly

1. Check vent piping.
2. Check combustion air inlet piping.
3. Check the pressure relief valve.
4. Check the condensate drain assembly.

16.2.3 Every 6 Months

1. Check appliance piping and gas supply piping for corrosion or potential signs of leakage.
2. Operate the pressure relief valve.

WARNING

Follow the maintenance procedures given throughout this manual. Failure to perform the service and maintenance or follow the directions in this manual can result in damage to the CHALLENGER or system components which can result in substantial property damage, serious injury, or death.

Section XVII: Maintenance Procedures

17.1 Annual Maintenance Procedures

WARNING

The CHALLENGER should be inspected and serviced annually, preferably at the start of the heating season, by a qualified service technician. In addition, the maintenance and care of the appliance as outlined in Section XVI and further explained in Section XVII should be performed to assure maximum efficiency and reliability of the appliance. Failure to service and maintain the CHALLENGER and the system components could result in equipment failure which can result in substantial property damage, personal injury, or death.

NOTICE

The following information provides detailed instruction for completing the maintenance items outlined in the maintenance schedule in Section XVI. In addition to this maintenance, the CHALLENGER should be serviced at the beginning of the heating season by a qualified service technician.

17.2 Reported Problems

Any problems reported by the owner should be checked, verified, and corrected before proceeding with any maintenance procedures.

17.3 Check Surrounding Area

Verify that the area surrounding the CHALLENGER is free of combustible / flammable materials, vapors or liquids. Remove immediately if found.

Verify that combustion air inlet area is free of any contaminates. Refer to the materials listed in Section 3.1 of this manual. If any of these products are in the area from which the appliance takes its combustion air, they must be removed immediately or the combustion air intake must be relocated to another area.

17.4 Inspect Burner Area

1. Remove the appliance front jacket panel.
2. Vacuum any dirt or debris from the blower component.
3. Reinstall front jacket panel when completed.

WARNING

Do not use solvents to clean any of the components. The components could be damaged, resulting in unreliable or unsafe operation.

17.5 Check System Piping

Inspect all piping (water and gas) for leaks and verify that the piping is leak free and properly supported. Inspect the fittings and components on the appliance and verify they are leak free.

WARNING

Eliminate all boiler leaks. Continual fresh make-up water will reduce the heat exchanger life causing appliance failure. Leaking water may also cause severe property damage to the surrounding area. Inspect the gas supply piping using the procedure outlined in Section 11.6.

17.6 Clean Condensate Drain Assembly

1. Remove the condensate assembly from the appliance.
2. Empty any water from the trap and drain assembly. Flush with fresh water as necessary to clean.
3. Check the drain piping from the condensate drain assembly to the drain. Flush to clean as necessary.
4. Fill the condensate drain assembly with water.
5. Reassemble the condensate drain assembly onto the appliance.

WARNING

When re-assembling the condensate drain assembly, ensure all gaskets are in place and correctly installed. Ensure all associated internal joints are complete, tight and secure. Failure to comply can result in flue gas leakage resulting in substantial property damage, serious injury, or death.

17.7 Check Ventilation Air Openings

Verify that all ventilation openings to the mechanical room or building are open and unobstructed. Check the operation and wiring of any automatic ventilation dampers.

Check and verify the vent discharge and the combustion air intake are free of debris and obstructions.

17.8 Inspect Vent and Combustion Air Piping

Visually inspect the venting system and combustion air piping for blockage, deterioration or leakage. Repair any deficiencies.

Verify that the combustion air inlet piping is connected, sealed and properly supported.

WARNING

Failure to inspect the vent system and combustion air inlet piping and to have any conditions repaired can result in substantial property damage, serious injury, or death.

17.9 Check Boiler System

Verify all system components are correctly installed and operating properly.

Check the cold fill pressure for the system, typical cold water fill pressure is 12 psig [0.8 bar].

Verify the system pressure, as the appliance operates at high temperatures, to ensure the pressure does not exceed 25 psig [1.7 bar]. Excessive pressure reading may indicate expansion tank sizing is incorrect or system performance problems.

Inspect air venst and air separators in the system. Remove the caps on automatic air vents and briefly depress the valve stem if present to flush vent. Replace the cap when completed. Open manual air vent on top of unit. Once air has stopped escaping, close the manual air vent. Ensure vents do not leak. Replace any leaking vents.

17.10 Removing Internal Flue and Condensate Pan for Inspection

1. Loosen the flue pipe retaining ring as shown in Fig. 23 on page 49.
2. Pull up on the flue pipe to disengage from the condensate pan as show in Fig. 24 on page 49.
3. Pull the flue pipe down and out to disengage from the vent adapter as shown in Fig. 24 on page 49.
4. Lift up the condensate pan to disengage from trap.
5. Once the condensate pan is clear of the bottom jacket, rotate it towards the front of the appliance and push down on the rear to disengage from the heat exchanger as shown in Fig. 25 on page 49.
   a. Inspect the flue pipe and condensate pan for cracks, damage or distortion. Check all gaskets for tears, discoloration or other damage, replace as necessary.
   b. Once inspection is completed, re-assemble the condensate pan and flue pipe in reverse order.

WARNING

When re-assembling the condensate pan and flue pipe ensure all gaskets are in place and correctly installed. Ensure all associated joints are complete, tight and secure. Failure to comply can result in flue gas leakage resulting in substantial property damage, serious injury, or death.

17.11 Check Expansion Tank

Refer to Section V - Boiler Piping for recommended location of the expansion tank and air eliminators.

Closed -Type Tank:

1. Ensure tank is partially filled with water leaving an air gap as a cushion. Refer to the manufacturer's instruction for proper fill level.
2. Ensure the tank is fitted with a device that reduces gravity circulation of air-saturated tank water back into the system. This device prevents air from bubbling up through the water as it returns from the system.
3. Ensure no automatic air vents are used in the system. This will allow air to escape from the system instead of returning to the tank.

Diaphragm Tank:

1. Ensure the system contains a minimum of one automatic air vent. Recommended location of the air vent should be atop an air eliminator.
2. Remove the tank from the system and check the charge pressure. For residential applications the charge pressure is typically 12 psig [0.8 bar]. If tank does not hold a charge pressure, then the membrane is damaged and the tank should be replaced.

17.12 Check Relief Valve

WARNING

Before manually operating the relief valve, ensure the discharge piping is directed to a suitable place of disposal to avoid a potential scald hazard. The discharge piping must be full size without restriction and installed to permit complete drainage of both the valve and line.

Inspect the relief valve and lift the lever to verify flow at least annually or as recommended on the warning tag of the valve.

If after closing the valve, the valve fails to seat properly or continually weeps, replace the relief valve. Ensure the cause of the relief valve to weep is the valve itself, not due to system over-pressurization caused by an expansion tank that is waterlogged or undersized.

17.13 Inspection of Igniter

Remove the igniter using a 3 mm or T-15 hex key inserted through the two top panel holes located above the igniter. If necessary separate the top panel from the right side by inserting a straight screw driver in two slots on right side of top panel and bending metal tab in slots away from the side. Lift top panel .

Remove any white oxides accumulated on the igniter using fine grit sandpaper or steel wool. If the igniter does not clean to a satisfactory condition. Replace the igniter.

When replacing the igniter, ensure the gasket is in good condition and correctly positioned. Replace gasket if necessary.

Check igniter to Fig. 26 on page 50.

17.14 Check Ignition Wiring and Ground Wiring

Inspect the ignition wiring from the burner control module to the ground at heat exchanger. Ensure wiring is in good condition and securely connected.

Check ground continuity of the wiring to the appliance heat exchanger or piping using a continuity meter, replace ground wire if ground continuity is not completed and satisfactory.

17.15 Check Control Wiring

Inspect all control wiring. Ensure wiring is in good condition and properly connected.

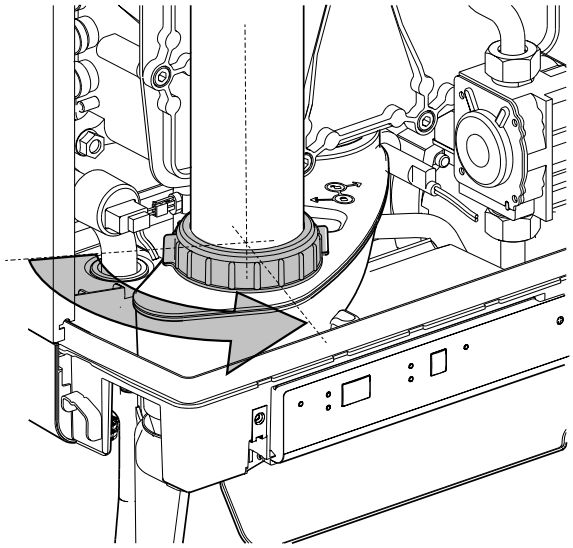

Fig. 23: Loosening of Flue Pipe Retaining Ring

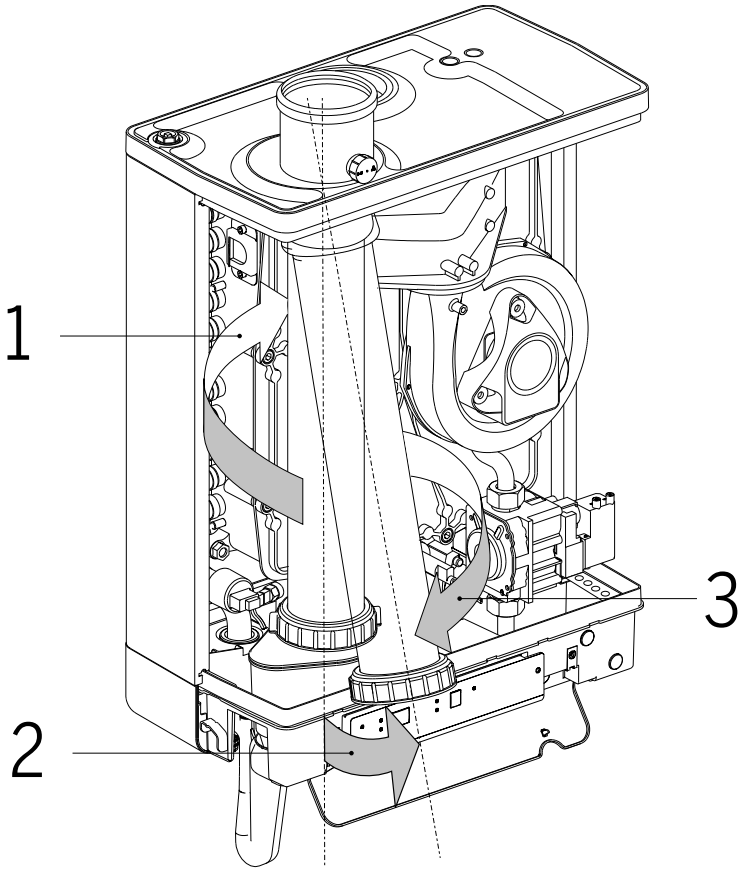

Fig. 24: Removal of Flue Pipe

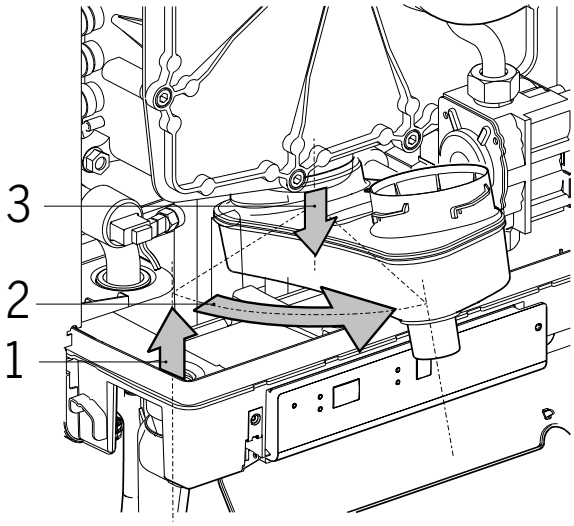

Fig. 25: Removal of Condensate Pan

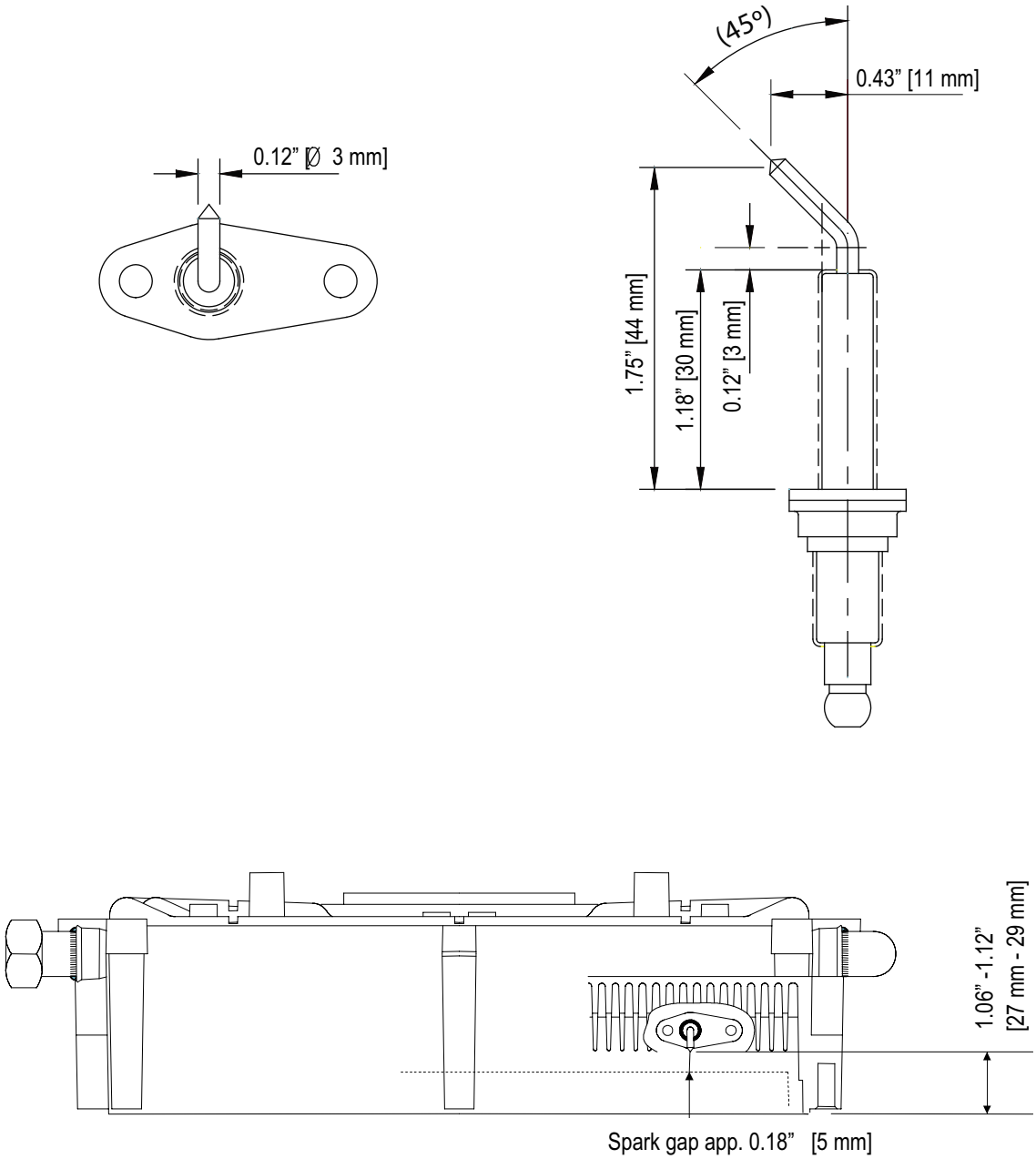

Fig. 26: Igniter Dimensions

17.16 Check Control Settings

1. Check the control parameter settings by pressing the thermometer button " " on control display. When the LED is lit for " " this is the CH Maximum Boiler Temperature. When the LED is lit for " " this is the DHW setpoint. Adjust settings with " + " or " − " buttons as necessary.
2. Press the reset button to close the parameter menu and store the changes.
3. Check any external limit control settings (if used). Adjust settings as necessary.

17.17 Perform Startup and Checkout Procedures

Start the appliance and perform the startup procedure as listed in Section XII.

Verify the cold water fill pressure is correct and the operating pressure of the boiler is within normal operating range.

Complete the checkout procedures as referenced in Section XIV.

17.18 Check Burner Flame

1. Inspect the burner flame through the observation port on left side of the heat exchanger.
2. Verify flame pattern is blue and covers the entire burner surface during high fire. Ensure combustion at both high and low fire meet the requirements listed in Table 5 on page 34. If combustion is OK and flame pattern is not fully blue & covers the entire burner surface during high fire, shut the appliance down and allow it to cool thoroughly before disassembly.
3. Close the external manual gas valve on the gas supply line and disconnect the gas piping and electrical connector to the gas valve.
4. Disconnect the wiring harness connectors from the blower.
5. Remove the mounting bolts and washers securing the front plate of the heat exchanger and set aside.
6. Carefully remove the front plate of the heat exchanger. Ensure combustion chamber insulation is not damaged during removal. See WARNING on page 53.
7. Remove the burner head mounting screws and remove the burner head. Inspect the burner head for deterioration. Use compressed air or a vacuum to clean the burner head. Replace burner head if necessary. Replace burner head gasket.
8. Re-assemble the burner head and burner head gasket. Ensure mounting screws are tight.
9. Remove the blower.
10. Use a vacuum cleaner or compressed air to clean the interior of the blower and venturi assembly. Inspect the blower blades to ensure they are clean and not damaged.
11. Re-assemble the blower and venturi onto the front plate of the heat exchanger . Ensure all gaskets are in good condition, and positioned correctly. Replace gaskets if necessary.
12. Re-assemble the front plate of the heat exchanger onto the heat exchanger with previously removed bolts and washers. Ensure the gasket and combustion chamber insulation is in place and not damaged, replace gasket and insulation if necessary. See WARNING on page 53. Ensure all bolts are tight.
13. Reconnect the wiring harness connectors to the blower.
14. Re-assemble the gas supply connections and electrical connector to gas valve inside the appliance. Open the external manual gas valve. Check gas piping for any leaks as outlined in Section 10.6 and repair if necessary. Place the appliance back into service.

17.19 Check Combustion Levels

Refer to Section 12.4 of this manual for measuring combustion levels and burner adjustments.

17.20 Clean Boiler Heat Exchanger

1. Shut down the appliance:
   a. Follow the instructions on Page 35 "To Turn Off Gas to Appliance"
   b. Do not drain the appliance unless it will be subject to freezing conditions.
   c. Do not drain the appliance if freeze protection fluid is used in the system.
2. Allow the appliance to cool down to room temperature before servicing.
3. Close the external manual gas valve on the gas supply line and disconnect the gas piping and electrical connector to the gas valve.
4. Disconnect the wiring harness connectors from the blower.
5. Remove the mounting bolts and washers securing the front plate of the heat exchanger and set aside.
6. Carefully remove the front plate of the heat exchanger. Ensure combustion chamber insulation is not damaged during removal. See WARNING on page 53.

7. Use a vacuum cleaner, compressed air or water to remove any accumulation from the heat exchanger flue ways. Do not use any solvent.
8. Re-assemble the front plate of the heat exchanger onto the heat exchanger with previously removed bolts and washers. Ensure the gasket and combustion chamber insulation is in place and not damaged, replace gasket and insulation if necessary. See WARNING on page 53. Ensure all bolts are tight.
9. Reconnect the wiring harness connectors to the blower.
10. Re-assemble the gas supply connections and electrical connector to gas valve inside the appliance. Open the external manual gas valve. Check gas piping for any leaks as outlined on Section 11.6 and repair if necessary. Place the appliance back into service.
11. Close isolation valves at the boiler piping to isolate the appliance from the heating system.
12. Attach a hose to the boiler drain valve and flush the boiler thoroughly with fresh water by using the purge valves to allow water to enter through the make-up water line to the boiler.
13. Once the boiler has been completely flushed, return the boiler and system piping back to operation.
14. Perform the required startup and checkout procedures as outlined in Sections XI, XII, XIV.

17.21 Clean Domestic Heat Exchanger

NOTICE

Before cleaning the domestic heat exchanger it is recommended to remove the domestic flow restrictor at the inlet of the domestic flow sensor and to reinstall the sensor to hasten cleaning. Reinstall the domestic flow restrictor when cleaning is complete.

1. Shut down the appliance
   a. Follow the instructions on Page 35 "To Turn Off Gas To Appliance"
2. Shut off all electrical power to the appliance.
3. Allow the appliance to cool down to room temperature before servicing.
4. Close the field installed isolation valves on both the domestic cold and hot water lines to the appliance as shown in Figs. 11 and 12 on pages 20 and 21.
5. Submerge one end of the hose halfway into cleaning fluid in a clean bucket with 4 gallons of new undiluted, food grade, white vinegar.
6. Attach the other end of the hose to a potable (bronze or stainless steel) circulating pump with a 2.5 gallon per minute [9.5 liters per minute] flow rate with 32 feet [9.7 meters] of head equivalent to Grundfos UP 26-99BF or Taco 009-SF5, use another hose to connect from the pump to the field installed domestic hot water outlet drain/flush valve.
7. Attach separate hose to the drain/flush valve.
8. Submerge the other end of this hose halfway in fluid in the same bucket.
9. Open both drain/flush valves on the domestic cold and hot water lines.

⚠ WARNING

To avoid risk of electrocution, ensure all power is off to the appliance before servicing. Use G.F.C.I. protected power supply to pump. Additionally, before powering up the circulating pump, ensure all hose connections and fittings are leak free and no water is on the floor.

10. Carefully power up the pump allowing the vinegar to circulate through the domestic heat exchanger for 1 hour.
11. Turn pump off and carefully remove power to the pump.
12. Close both drain/flush valves on the domestic cold and hot water lines.
13. Remove the hose from the bucket and pump connected to the drain/flush valve on the domestic hot water outlet.
14. Relocate the remaining hose still connected to the domestic cold water inlet drain/flush valve to the domestic hot water outlet drain flush valve and the other end of this hose from the bucket to a suitable drain.
15. Rinse the domestic heat exchanger for 5 minutes by opening both the domestic hot water outlet drain/flush valve and the isolation valve on the domestic cold water inlet.
16. Close drain/flush valve on the domestic hot water outlet
17. Remove hose from the drain/flush valve on the domestic hot water outlet.
18. Open the isolation valve on the domestic hot water outlet.
19. Turn on all electric to the appliance.
20. Perform the required startup and checkout procedures as outlined in Sections XI, XII, and XIV.

17.22 Review With Owner

Ensure the owner understands the importance to perform the maintenance schedule specified in this manual.

Remind the owner of the importance to call a licensed contractor should the appliance or system exhibit any unusual behavior.

Handling Previously Fired Combustion Chamber Insulation

WARNING

The combustion chamber insulation contains ceramic fibers, which are classified as a possible human carcinogen. When exposed to extremely high temperatures, the ceramic fibers, which contain crystalline silica, can be converted into cristobalite.

Avoid Breathing and Contact with Skin and Eyes

When removing or repairing the combustion chamber insulation follow these precaution measures:

1. Use a NIOSH approved respirator which meets OSHA requirements for cristobalite dust, similar to N95. Contact NIOSH at 1-800-356-4676 or on the web at www.cdc.gov/niosh for latest recommendations.
2. Wear long sleeved, loosing fitting clothing, gloves, and eyes protection.
3. Assure adequate ventilation.
4. Wash with soap and water after contact.
5. Wash potentially contaminated clothes separately from other laundry and rinse washing machine thoroughly.
6. Discard used insulation in an air tight plastic bag.

NIOSH Stated First Aid:

Eye/Skin:	Immediately irrigate
Breathing:	Clean fresh air

Section XVIII: Replacement Parts

WARNING

Replacement parts must be purchased through a local ACV - Triangle Tube distributor. When ordering parts please provide the model number and description and/or part number of the replacement part.
Use only genuine ACV - Triangle Tube replacement parts to ensure warranty coverage and to avoid damage to appliance and improper operation of appliance. Contact ACV - Triangle Tube at 856-228-8881 or www.triangletube.com for a list of distributors nearest you.

18.1 Internal Components

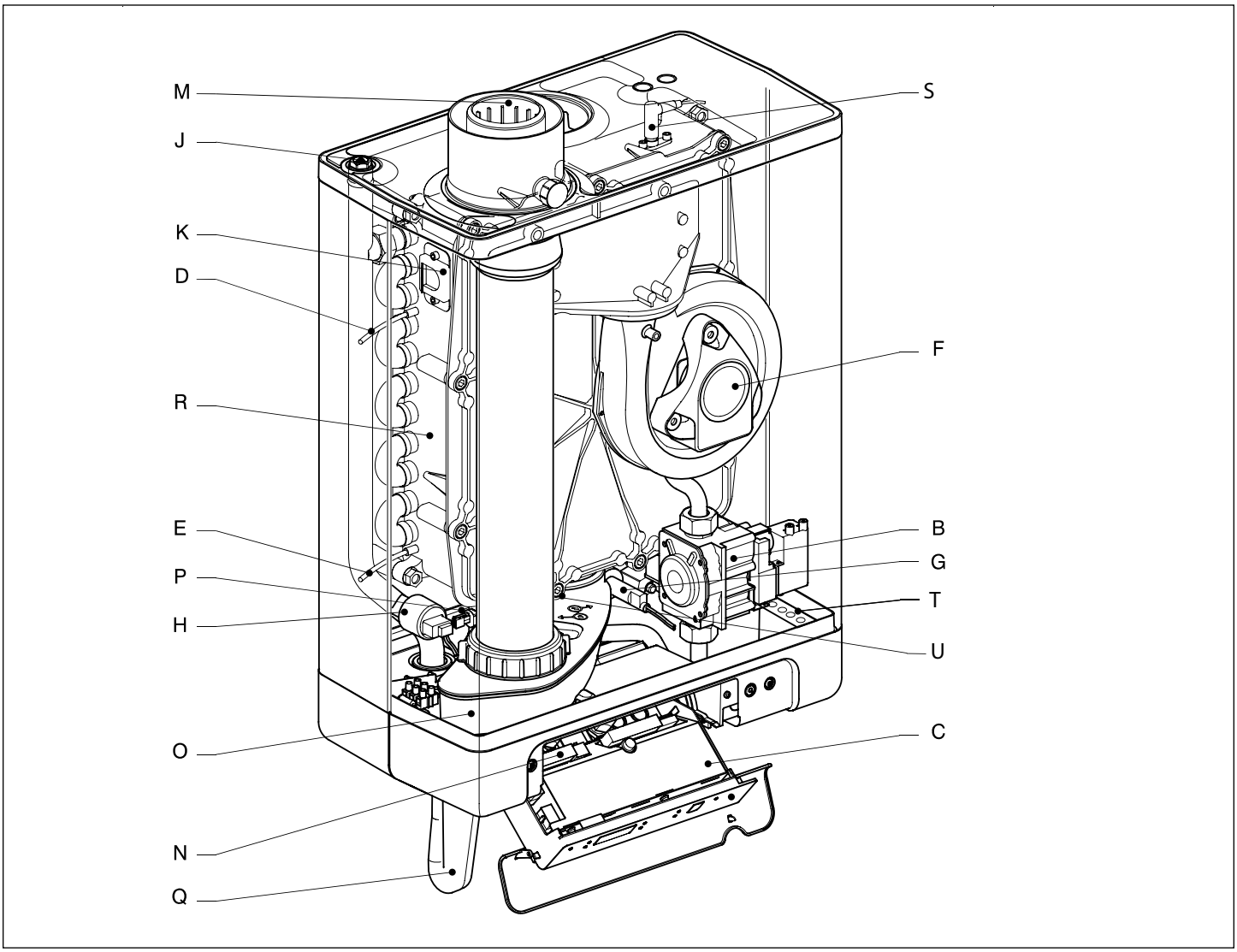

B. Gas Valve
C. Control/Display
D. CH Supply Sensor
E. CH Return Sensor
F. Blower
G. DHW Flow Sensor
H. LWCO/CH Pressure Sensor
J. Pressure Relief & Air Vent Connection
K. Sight Glass
M. Vent/Air Adapter (80/125 Concentric Option shown - 3" Standard, not shown)
N. Low Voltage/Terminal Strip (X4)
O. Condensate Pan
P. DHW Sensor
Q. Condensate Drain Trap Assembly
R. Heat Exchanger
S. Igniter
T. Line Voltage Terminal Strip
U. Flue Sensor

Fig. 27: CHALLENGER Internal Components

18.2 Front Door

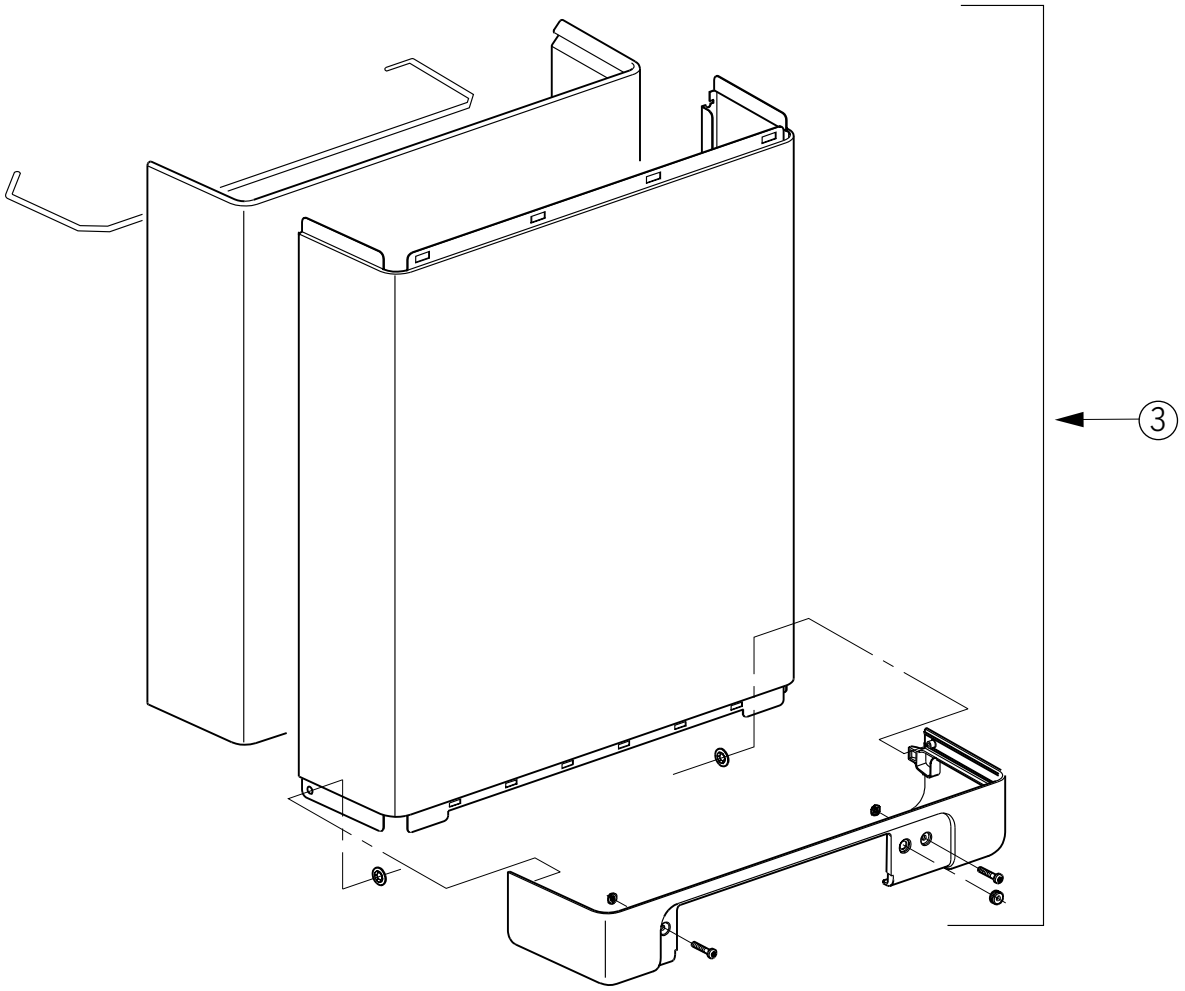

Fig. 28: CHALLENGER Front Door

Item	Part Number CC105	Part Number CC125	Part Number CC125H	Description
1	CCRKIT04			Wall Bracket Assembly (Not Shown)
2	CCRKIT05			Pipe Connectors & Brackets Assembly (Not Shown)
2A	CCFTG01			Connector Pipe CH (Not Shown) - 1/Kit
2B	CCFTG02			Connector Pipe DHW (Not Shown) - 1/Kit
3	CCRKIT07	CCRKIT08		Front Door Assembly

18.3 Vent Components

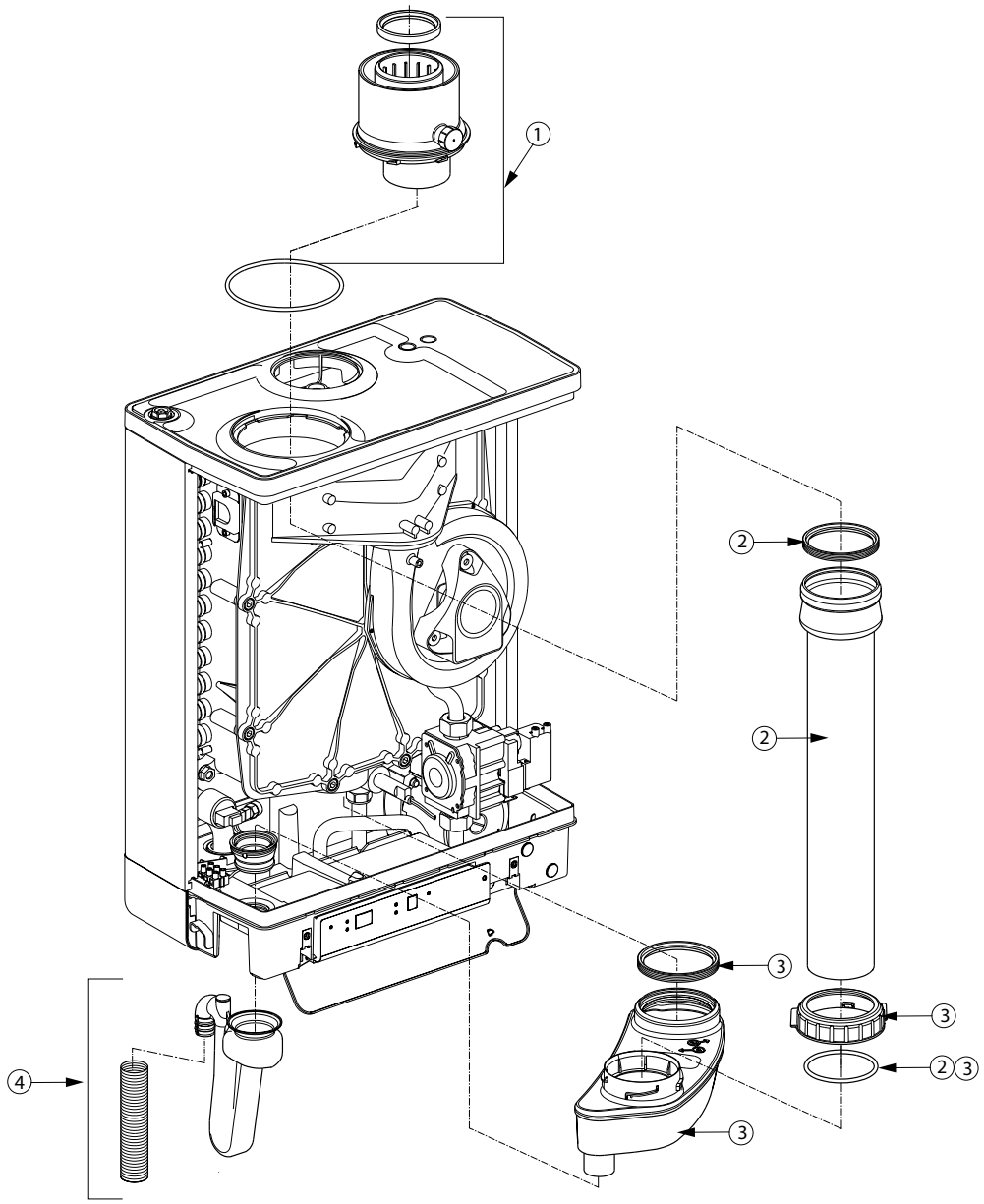

Fig. 29: CHALLENGER Vent Components

Item	Part Number CC105	Part Number CC125	Part Number CC125H	Description
1	CCRKIT09			80/125 Concentric Vent/Air Adapter Assembly (Optional - Shown)
	CCRKIT35			3" Vent/Air Adapter Assembly (Standard - Not shown)
2	CCRKIT11	CCRKIT12		Vent Assembly
3	CCRKIT13			Condensate Collector Assembly
4	CCRKIT14		CCRKIT14A	Condensate Trap Assembly
5	CCRKIT41			Condensate Collector/Trap Gasket
6	CCRKIT36			Flue Sensor

18.4 Heat Exchanger Components

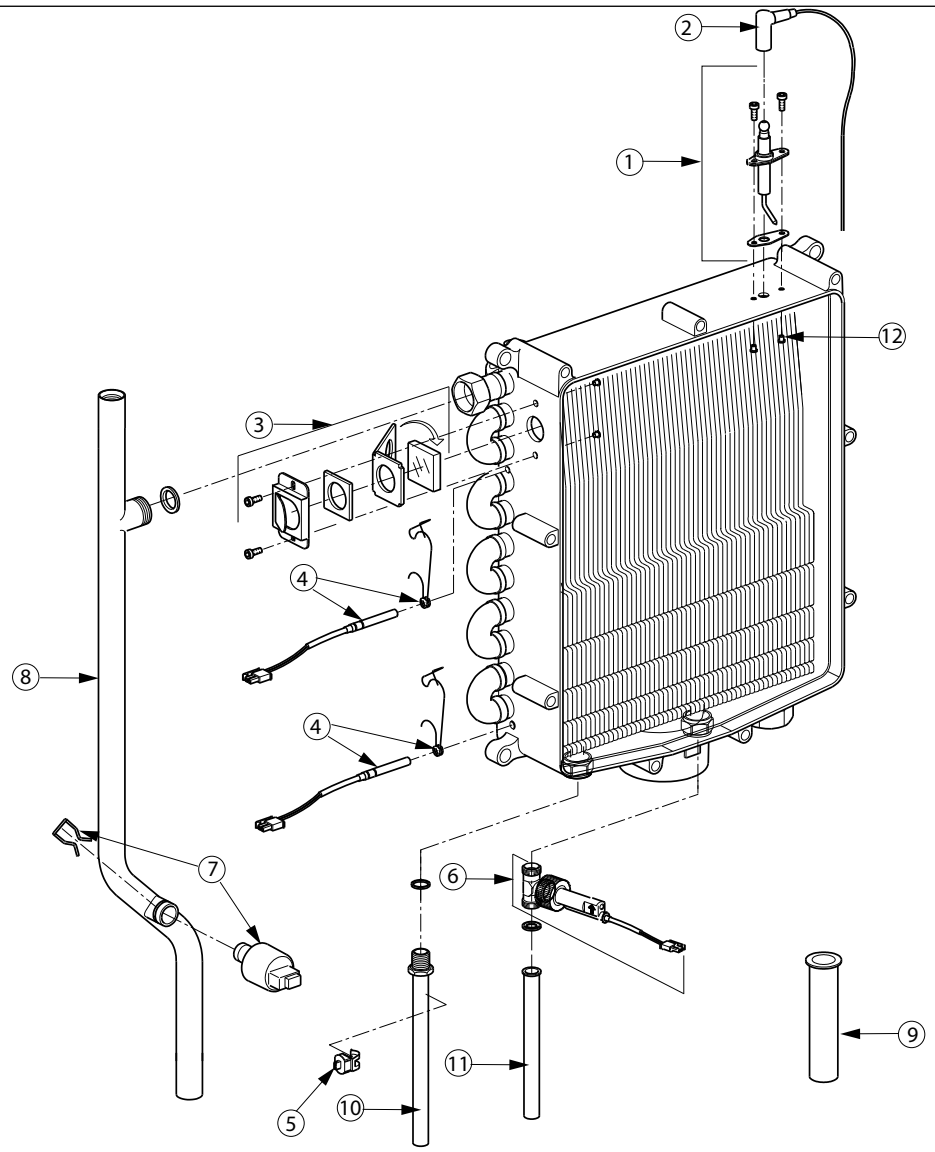

Fig. 30: CHALLENGER Heat Exchanger Components

Item	Part Number CC105	Part Number CC125	Part Number CC125H	Description
1	CCRKIT15			Igniter Assembly
2	CCCLB01			Ignition Cable
3	CCRKIT16			Sight Glass Assembly
4	CCRKIT17			CH Sensor Assembly - 1/Kit
5	CCSENS02			DHW Temperature Sensor
6	CCRKIT56			DHW Flow Sensor Assembly
7	CCRKIT19			LWCO / CH Pressure Sensor Assembly
8	CCRKIT21	CCRKIT22		CH Supply Pipe Assembly
9	CCRKIT23			CH Return Pipe Assembly
10	CCRKIT26			DHW Hot Water Outlet Pipe
11	CCRKIT57			DHW Cold Water Inlet Pipe
12	CCRKIT40			Igniter Bushings - 2/Kit

18.5 Blower & Gas Valve Components

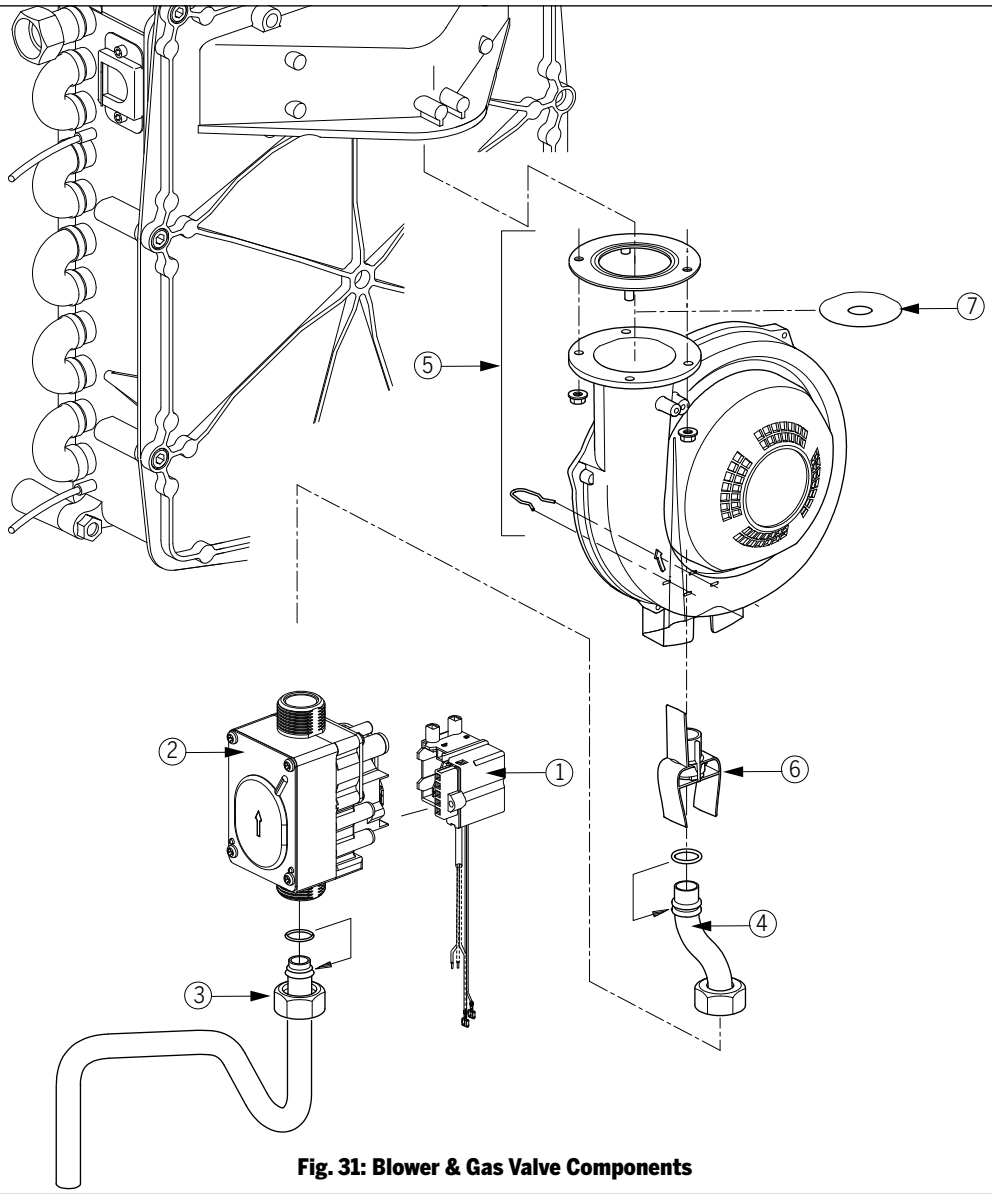

Fig. 31: Blower & Gas Valve Components

Item	Part Number CC105	Part Number CC125	Part Number CC125H	Description
1	CCRKIT59			Ignition Transformer Assembly
2	CCRKIT60			Gas Valve Assembly
3	CCRKIT31			Lower Gas Pipe Assembly
4	CCRKIT61	CCRKIT62		Upper Gas Pipe Assembly
5	CCRKIT32			Blower Assembly
6	CCRKIT45	N/A		Venturi 406
	N/A	N/A	CCRKIT63	Venturi 471
	N/A	CCRKIT46	N/A	Venturi 362
7	CCRKIT48	N/A		Blower Outlet Orifice 1-7/16" (37 mm)
N/A = Not Applicable				

18.6 Burner Components

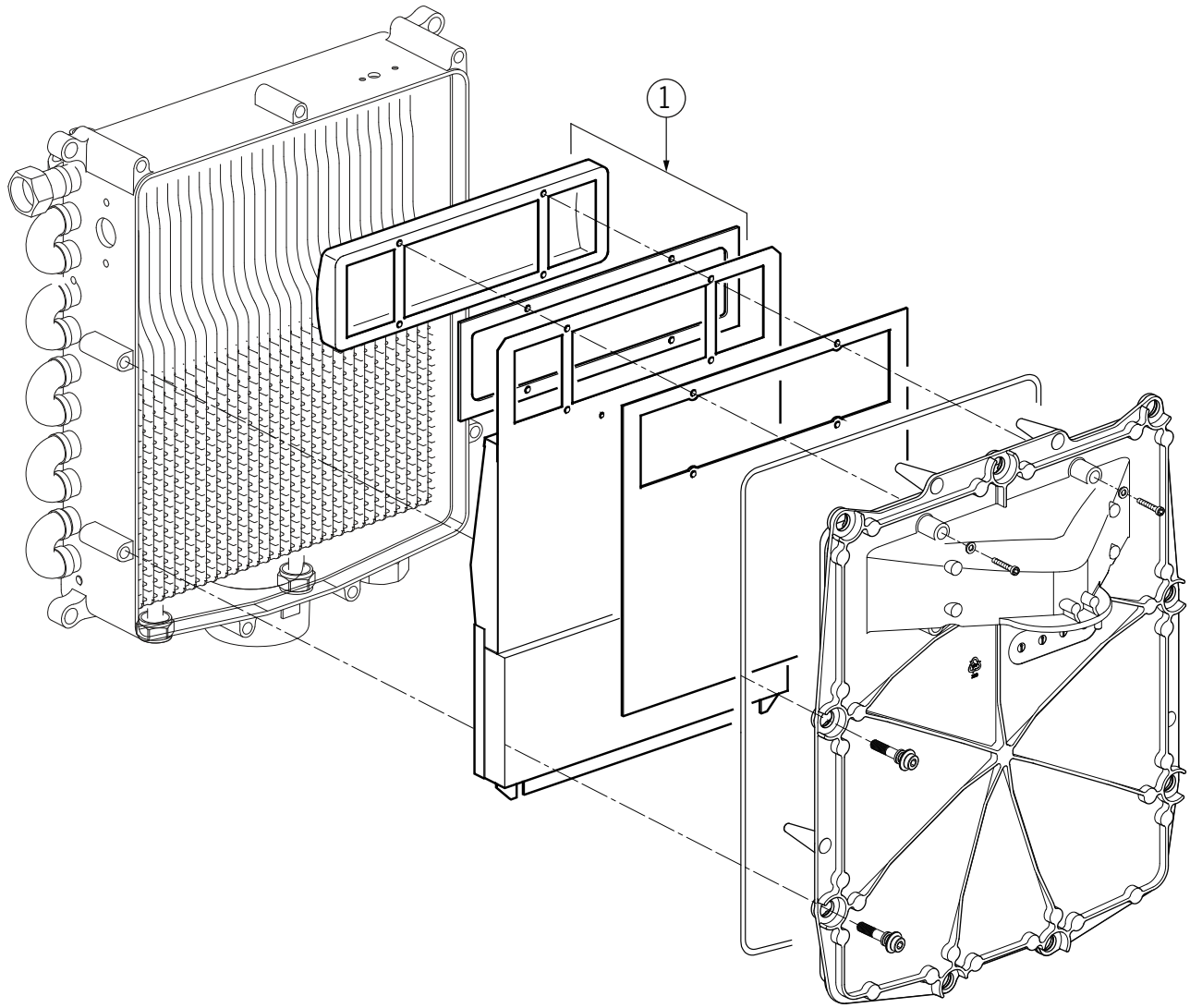

Fig. 32: Burner Components

Item	Part Number CC105	Part Number CC125	Part Number CC125H	Description
1	CCRKIT33			Burner Assembly

18.7 Control Components

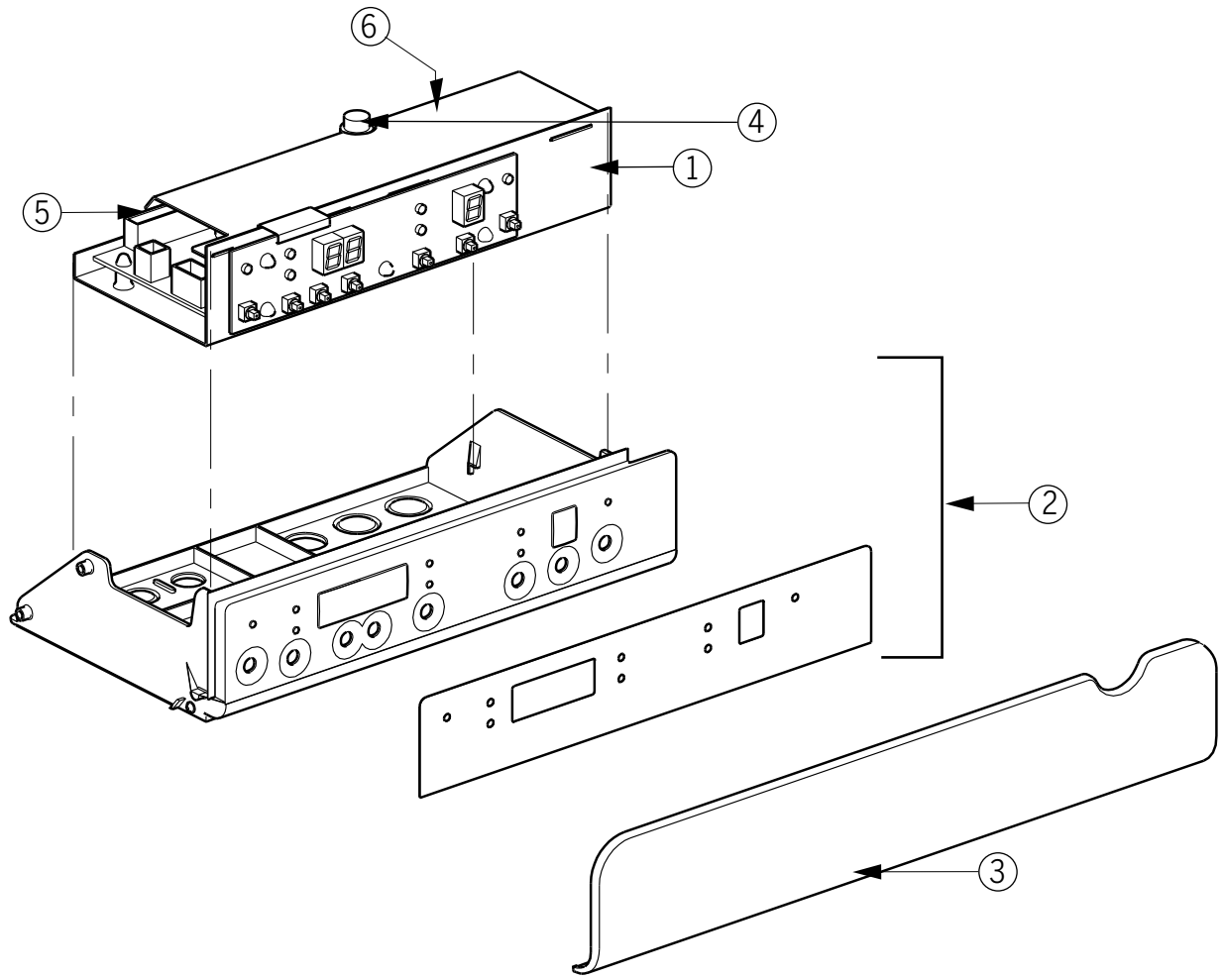

Fig. 33: Control Components

Item	Part Number CC105 & CC125	Part Number CC125H	Description
1	CCRKIT53	CCRKIT54	Control/Display
2	CCCS01		Plastic Control Housing
3	CCRKIT34		Flip Panel
4	CCFUSE01		Fuse - 1/Kit
5	CCRKIT43		Connector - X4, 24V, 9 Pin (Not Shown)
6	CCRKIT44		Connector - X2, 120V, 8 Pin (Not Shown)

Section XIX: Dimensions & Connections

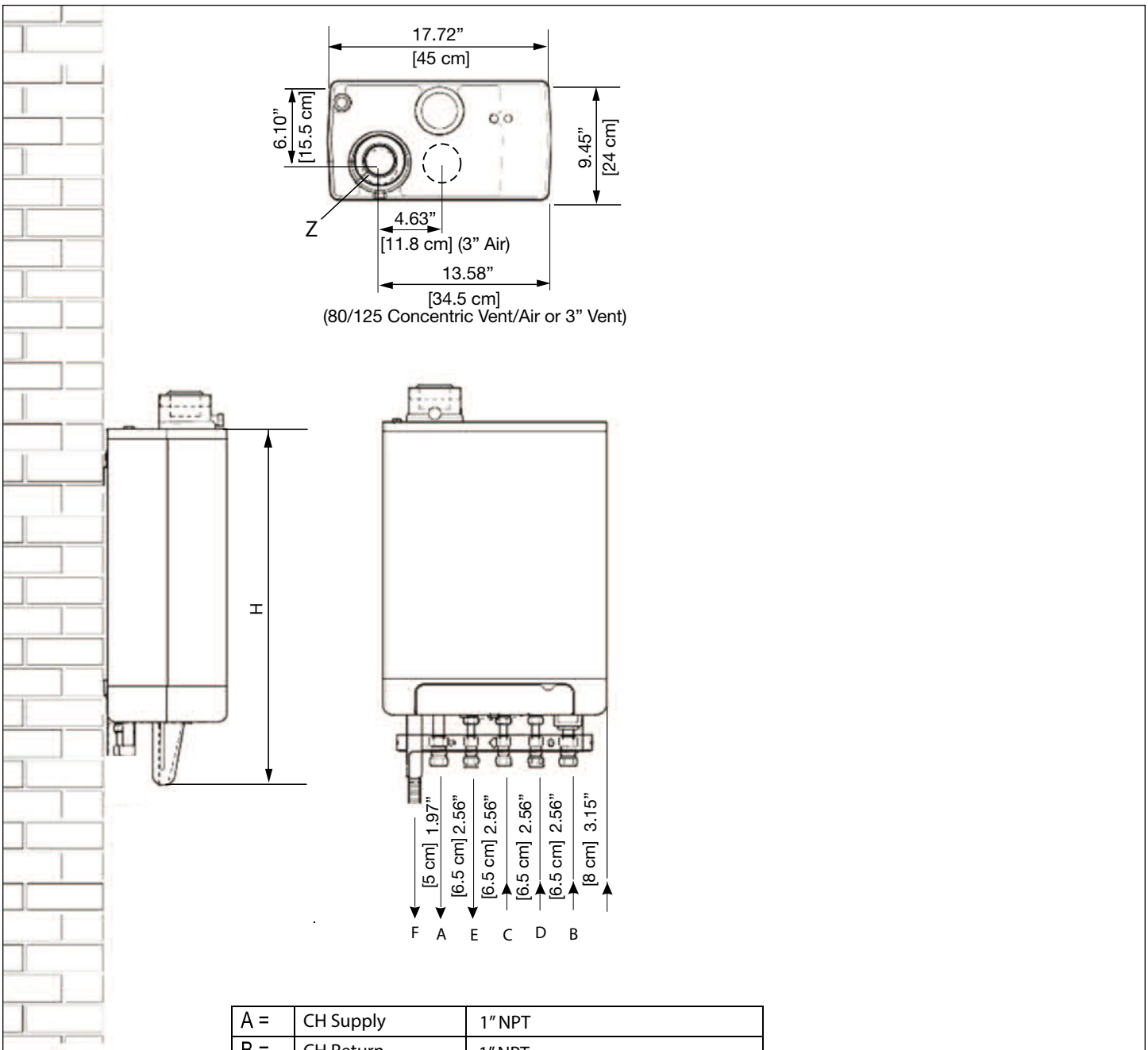

A =	CH Supply	1” NPT
B =	CH Return	1” NPT
C =	Gas	1/2” NPT
D =	DHW Cold	3/4” NPT
E =	DHW Hot	3/4” NPT
F =	Condensate Drain	Flexible
H=	33.07” [84 cm]	Challenger CC125 & CC125H
H =	30.71” [78 cm]	Challenger CC 105
Z =	Vent/Air	∅ 80/125 Concentric Adapter (optional - shown) or 3” (standard -not shown)

Fig. 34: Dimensions & Connections

Section XX: Domestic Specifications

20.1 Performance Specifications

NOTICE

The following efficiency performance is achieved when the CHALLENGER is operated as a Water Heater according to DOE 10CFR, Part 430, subpart B, Appendix E, test procedure.

Model	Fuel	Input Modulation BTUH [kW]	Continuous Domestic Flow 77°F Rise	Water Heater Energy Factor	Weight Lbs [kg]
CC105	Natural or Propane	29,000 - 106,000 [8.5 - 31]	2.3 gpm [8.7 lpm]	.86	73 [33]
CC125	Natural or Propane	33,000 - 124,000 [9.7 - 36.3]	2.7 gpm [10.41 lpm]	.85	80 [36]
CC125H	Natural or Propane	20,000 - 125,000 [5.9 - 36.6]	2.7 gpm [10.41 lpm]	.85	80 [36]

20.2 Domestic Flow

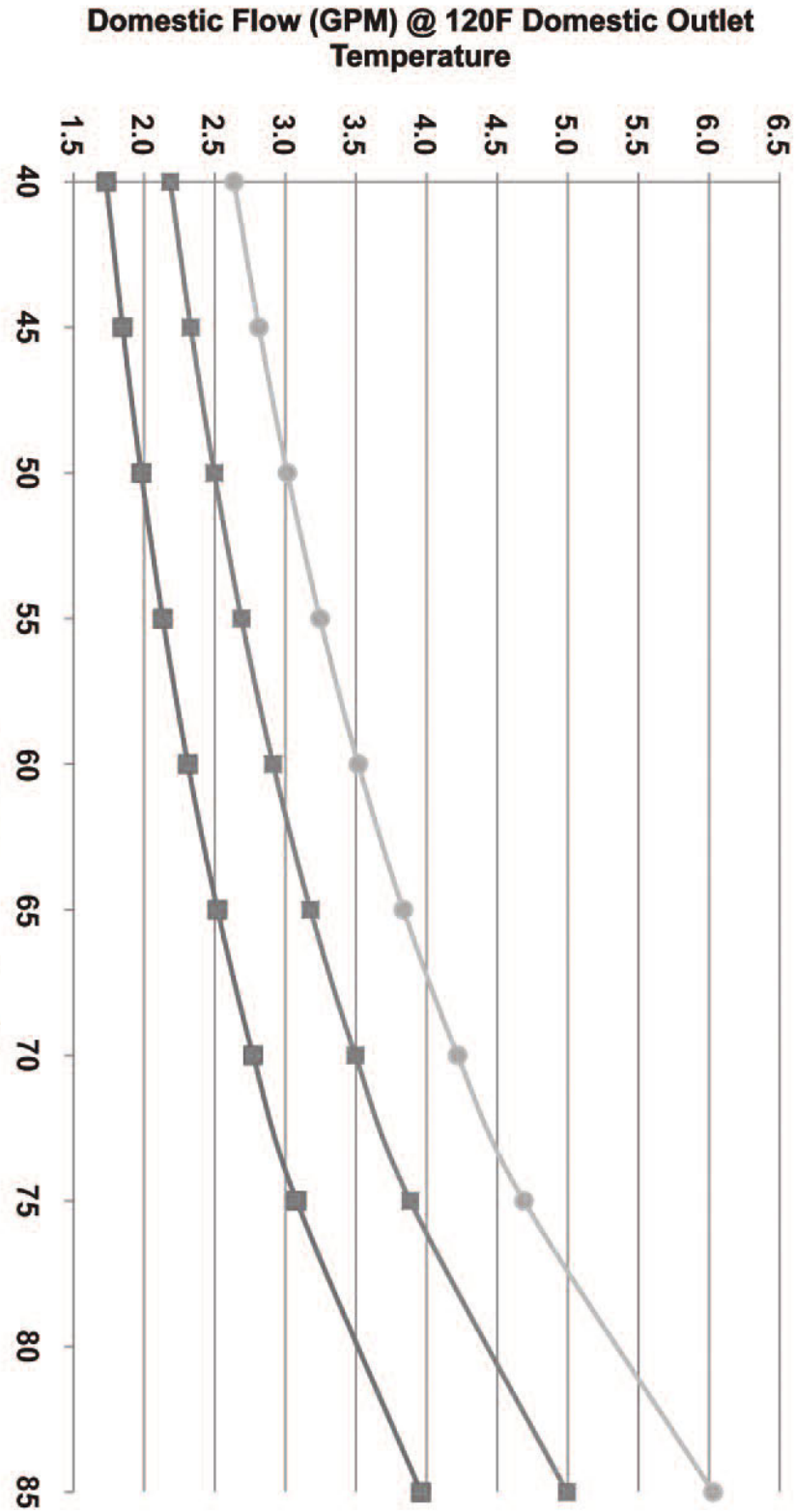

Graph 2: Domestic Flow Rate at 120°F Domestic Outlet and Varing Domestic Inlet Temperature

XXI: Boiler Specifications

21.1 Performance Ratings

NOTICE

The following efficiency performance is achieved when the CHALLENGER is operated as a boiler according to the ASHRAE 103 test procedure.

CHALLENGER Model	Fuel	Input Modulation BTUH [kW] (Note 4)	DOE Heating Capacity BTUH [kW] (Note 1 & 4)	Net AHRI Rating BTUH [kW] (Note 2)	AFUE (Note 3)	Weight Lbs [kg]
CC105	Natural or Propane	29,000 - 106,000 [8.5 - 31]	94,000 [27.5]	82,000 [24.0]	94%	73 [33]
CC125	Natural or Propane	33,000 - 124,000 [9.7 - 36.3]	110,000 [32.2]	96,000 [28.1]	94%	80 [36]
CC125H	Natural or Propane	20,000 - 125,000 [5.9 - 36.6]	111,000 [32.5]	97,000 [28.4]	95%	80 [36]

Note 1: The heating capacity of the CHALLENGER is based on the test requirements of the U.S. Department of Energy.

Note 2: The AHRI rating is based on a piping and pick up allowance of 1.15. This allowance should be sufficient for the standard radiation requirements for a building load.

Note 3: Based on the given AFUE the CHALLENGER meets the energy efficiency guidelines established by Energy Star.

Note 4: Input and output ratings are shown for sea level applications. The CHALLENGER automatically derates the input at approximately 2% for every 1,000 ft of altitude. No alterations to the appliance or burner system are required.

21.2 CC105 Pressure Loss Curves

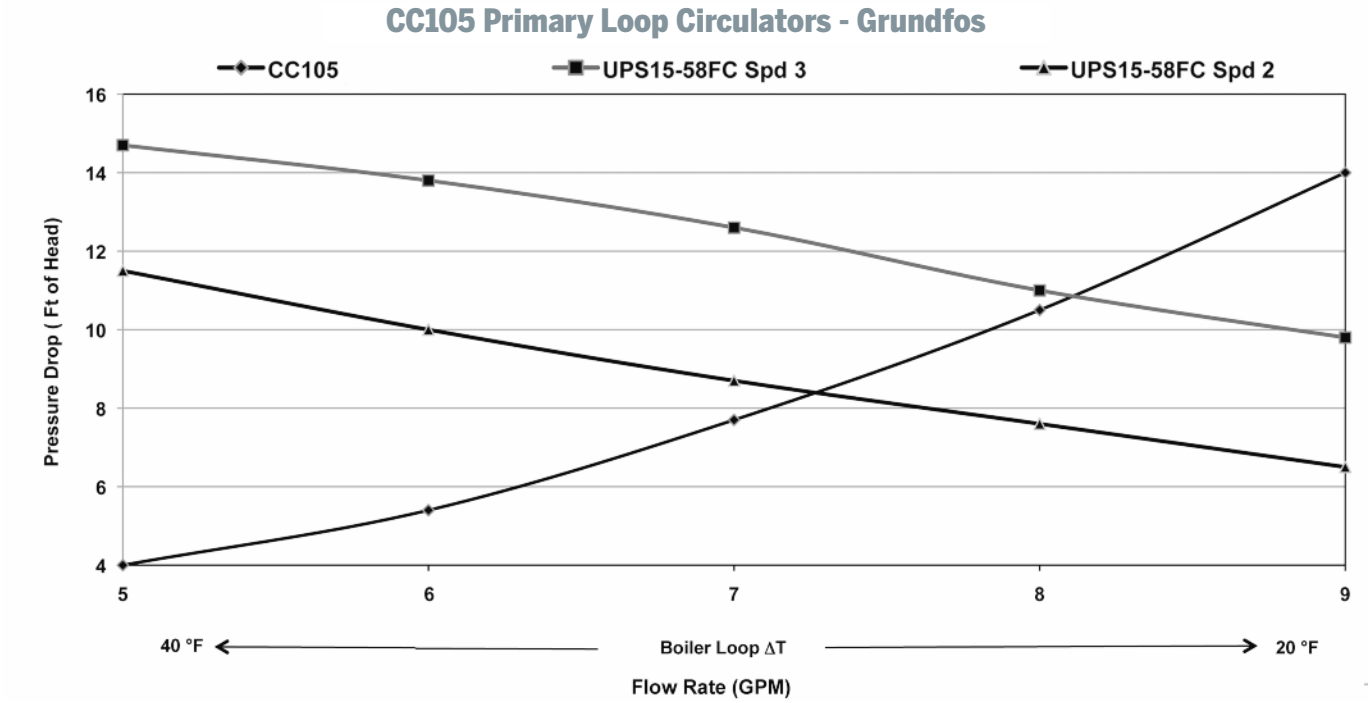

Graph 3: Pressure Loss Through Boiler - Grundfos Circulators

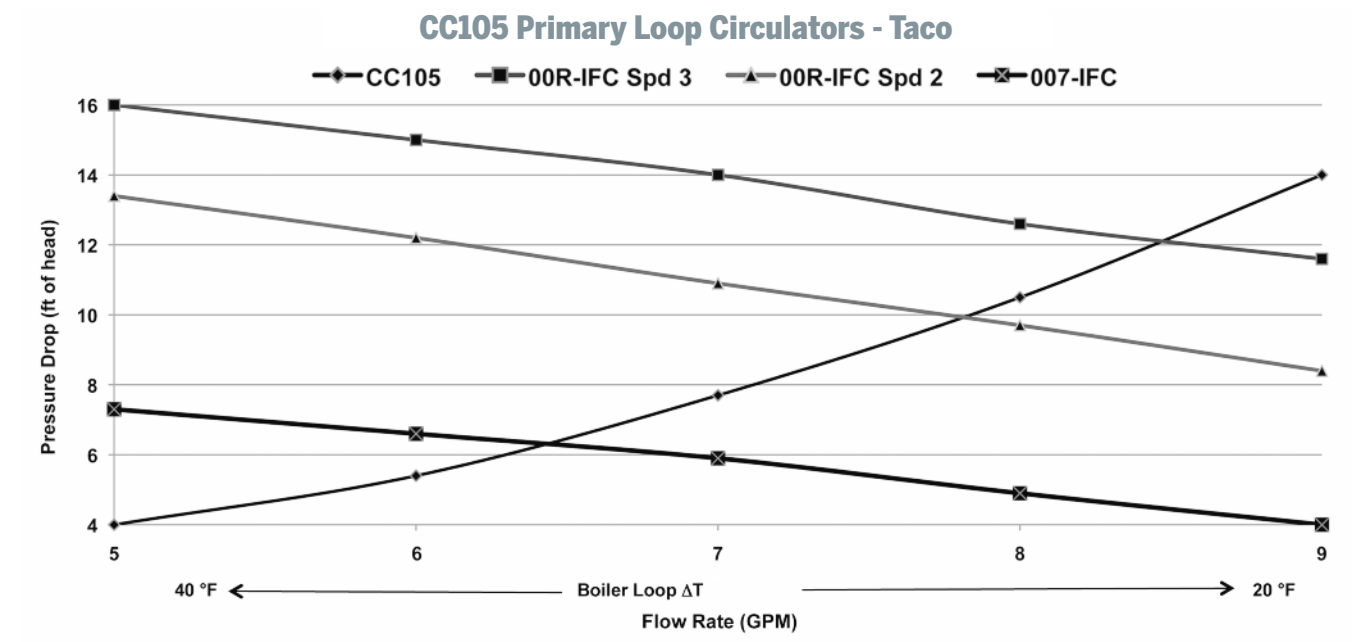

Graph 4: Pressure Loss Through Boiler - Taco Circulators

NOTICE

Minimum boiler flow rate required at full input: CC105 - 5 gpm [19 lpm]

Pump curves and system curves DO NOT include any allowance for near boiler piping

21.3 CC125 & CC125H Pressure Loss Curves

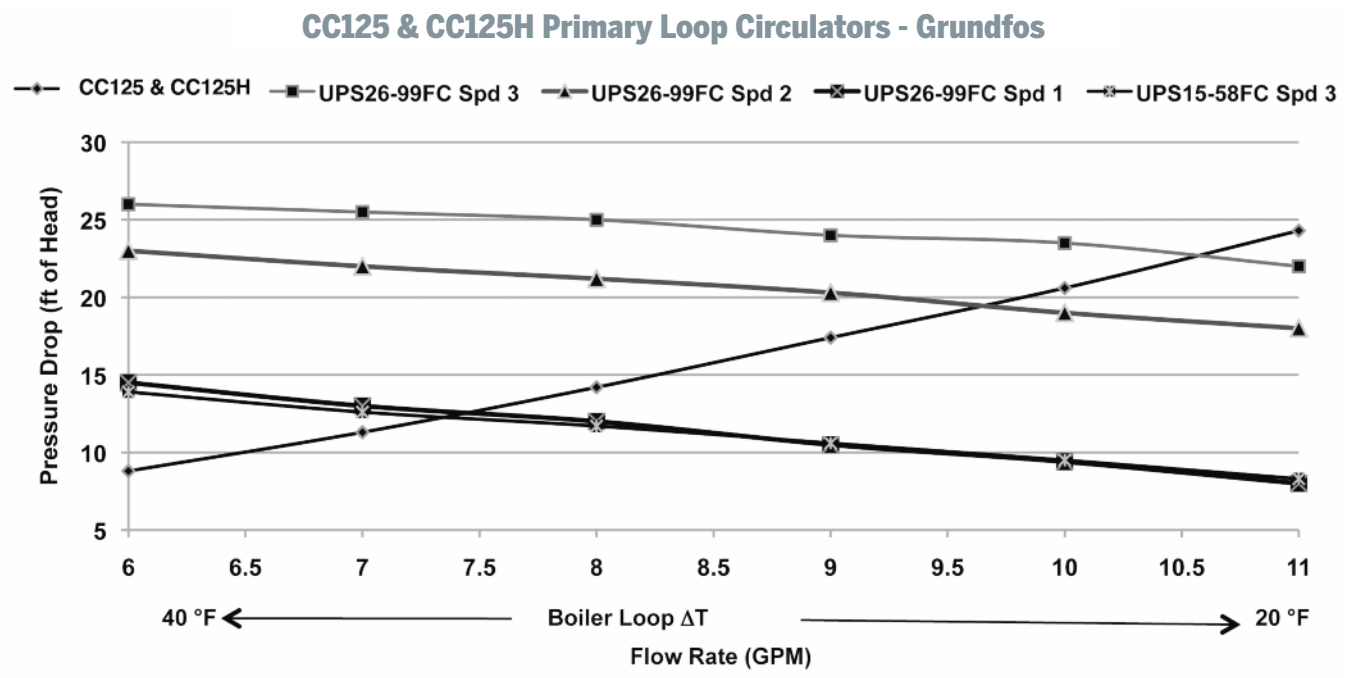

Graph 5: Pressure Loss Through Boiler - Grundfos Circulators

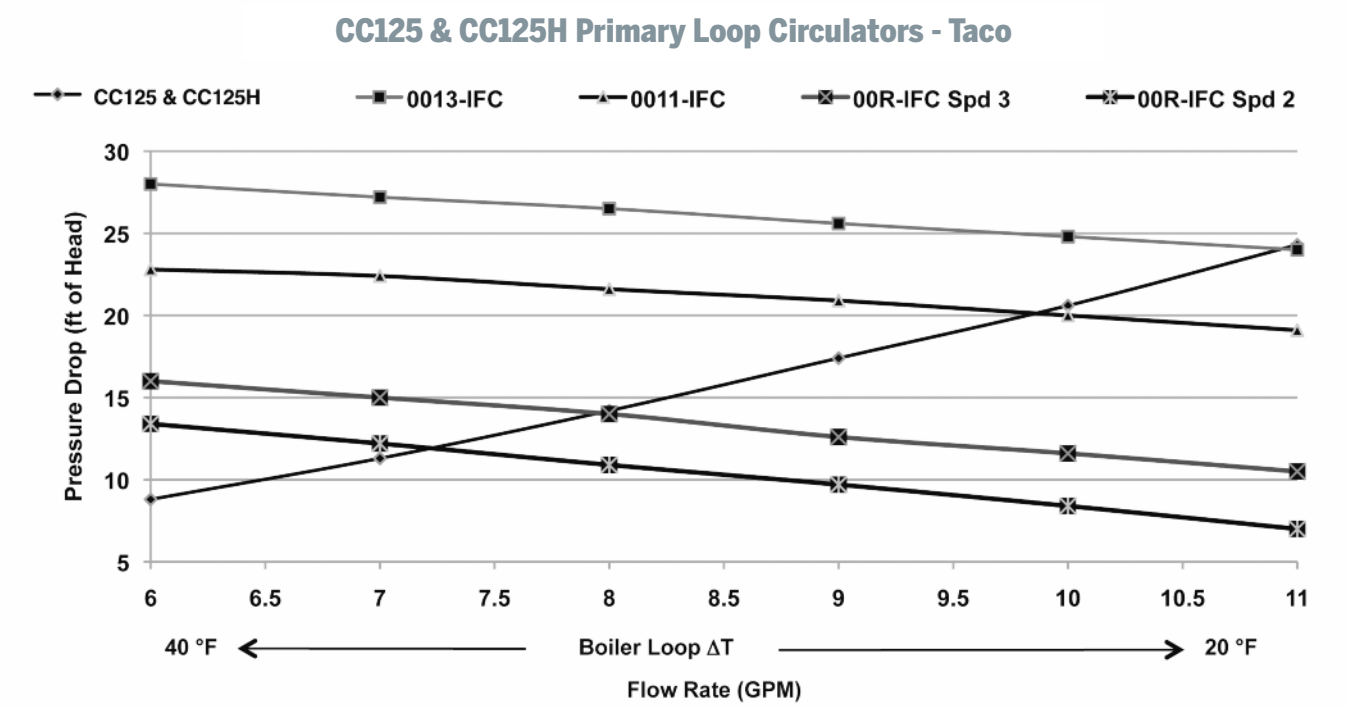

Graph 6: Pressure Loss Through Boiler - Taco Circulators

NOTICE

Minimum boiler flow rate required at full input: **CC125 & CC125H - 6 gpm [23 lpm]**

Pump curves and system curves DO NOT include any allowance for near boiler piping

Section XXII: Notes

22. Notes

Additional Quality Water Heating Equipment Available From

ACV Triangle Tube

Maxi-Flo Pool and Spa Heat Exchangers

- Constructed of high quality corrosion resistant stainless steel (AISI 316) or titanium
- Specially designed built-in flow restrictor to assure maximum heat exchange
- Compact and light weight
- Available in 8 sizes that can accommodate any size pool or spa

SMART/COMFORT Indirect Fired Water Heaters

- Exclusive Tank-in-Tank design
- Stainless steel construction
- Self cleaning/Self descaling heat exchanger
- SMART available in 7 sizes; COMFORT available in 2 sizes
- SMART: Limited LIFETIME residential warranty / Limited 6 year commercial warranty
- COMFORT: Limited 10 year warranty

TTP Brazed Plate Heat Exchangers

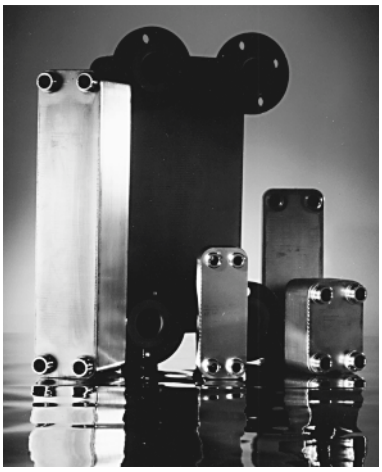

- For domestic water, snow melting, radiant floor, and more
- Plates made of stainless steel, with 99.9% copper brazing ensuring a high resistance to corrosion.
- Self Cleaning / Self Descaling
- Computerized sizing available from ACV - Triangle Tube
- Available in capacities from 25,000 BTUH to 5,000,000 BTUH

ACV Triangle Tube

One Triangle Lane ▪ Blackwood, NJ 08012

P 856 228 8881 f 856 228 3584 W www.triangletube.com