HEAT CONTROLLER

INSTALLATION, OPERATION & MAINTENANCE MANUAL

CCG / VCG / MCG Coils

Heat Controller • 1900 Wellworth Ave. • Jackson, MI 49203 • (517)787-2100 • www.heatcontroller.com

Safety Instruction
Potential safety hazards are alerted using ⚠ symbol. The symbol is used in conjunction with terms that indicate the intensity of the hazard.

⚠ WARNING
This symbol indicates a potentially hazardous situation, which if not avoided, could result in serious injury, property damage, product damage or death.

⚠ CAUTION
This symbol indicates a potentially hazardous situation, which if not avoided, may result in moderate injury or property damage.

⚠ WARNING
Certified technicians or those individuals meeting the requirements specified by NATE may use this information. Property and product damage or personal injury hazard may occur without such background.

⚠ WARNING
All power sources should be disconnected prior to servicing. Failure to do so may cause personal injury or property damage.

⚠ WARNING
Product designed and manufactured to permit installation in accordance with local and national building codes. It is the installer's responsibility to ensure that product is installed in strict compliance with national and local codes. Manufacturer takes no responsibility for damage (personal, product or property) caused due to installations violating regulations.

Inspection
Upon receiving the product, visually inspect it for any major shipping related damages. Shipping damages are the carrier's responsibility. Inspect the product labels to verify the model number and options are in accordance with your order. Manufacturer will not accept damage claims for incorrectly shipped product.

Installation Preparation
Read all the instructions in this guideline carefully while paying special attention to the WARNING and CAUTION alerts. If any of the instructions are unclear clarify with certified technicians. Gather all the tools needed for successful installation of the unit prior to beginning the installation.

Condensate Drain Preparation

An **auxiliary drain pan** must be provided by the installer and placed under the entire unit with a separate drain line that is properly sloped and terminated in an area visible to the home owner. The auxiliary pans provide extra protection to the area under the unit should the primary and secondary drain plug up and overflow. As expressed in our product warranty; **MANUFACTURER WILL NOT BE BILLED FOR ANY STRUCTURAL DAMAGES CAUSE BY FAILURE TO FOLLOW THIS INSTALLATION REQUIRMENT.** The drains from the auxiliary drain pan must be installed according to the local building codes.

⚠ CAUTION
The drain lines from the Auxiliary should **NOT** be connected to the primary drain line of the coil.

⚠ WARNING
Do **NOT** install coils with plastic drain pans on any OIL or DRUM type furnaces or applications where temperature of the drain pan might exceed 260±5 ºF (126.6±5 ºC). A metal pan should be specified in these applications.

Install cased coils with plastic drain pans on a level, flat surface. Incase of coils with metal drain pans slop the coil ¼" towards the drain. No such pitch is necessary in case of plastic drain pans. Condensate drain lines must be installed in accordance with local building codes.

The drain lines must be installed with ¼" per foot pitch to provide free drainage. A condensate trap **MUST** be installed on the primary drain line to ensure proper drainage of the condensate. The trap must be installed in the drain line below the bottom of the drain pan. Figure 1 illustrates the typical drain trap installation

⚠ CAUTION
If the drain pan is constructed of nylon or plastic; use Teflon tape to connect the drain lines to the threads in the drain pan. **DO NOT USE SOLVENT BASED PIPE DOPE. THIS WILL REDUCE THE LIFE OF THE PAN.**

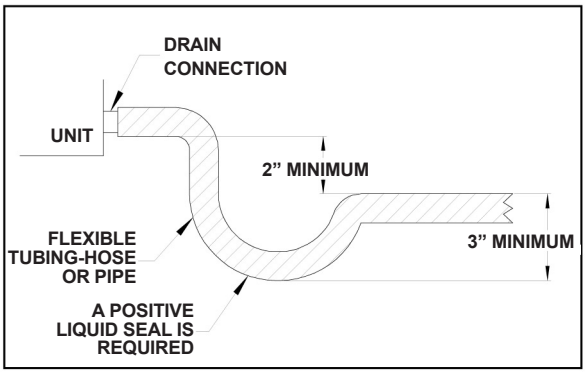

Figure. 1. Typical drain line trap set up

The drain pan has primary and secondary drain connections. If a secondary drain line is required it should be run separately from the primary and should terminate in a highly visible location. Condensate disposal through the secondary drain line indicates that the primary drain line is plugged and needs cleaning. If a secondary drain line will not be provided plug the secondary drain. The red drain plugs are **NOT** to be reused without plumbers tape or putty. The drain line connectors should be hand tightened to a torque of approximately 35-40 lb (4-5 turns).

Coil Installation

⚠ WARNING

The coil was manufactured with dry nitrogen pre-charge. Release the pressure through the Schrader valve test port prior to installation. If holding pressure is not present, return coil to distributor for exchange.

Clean coil fins with degreasing agent or mild detergent and rinse fins clean prior to installation.

⚠ CAUTION

Coil should be installed on the discharge side of the furnace

The refrigerant line sizes should be selected according to the recommendations of the outdoor unit manufacturer.

All connection joints should be burr free and clean. Not removing burr and cleaning may increase chances of a leak. It is recommended to use a pipe cutter to remove the spun closed end of the suction line.

To avoid damage to grommets (where present); remove these prior to brazing by sliding over the lines. Use a quenching cloth or allow the lines to cool down before reinstalling the grommets.

Use of wet rags/quenching cloth is highly recommended to prevent weld-related damages to the casing and Schrader valve (if present).

⚠ CAUTION

Some coils may include a Schrader valve on the suction manifold. Ensure that the Schrader valve and valve core (where present) are protected from heat to prevent leakage.

Metering Device

Coils are available with two kinds of metering devices a) flowrator or b) TXV. Instructions below are separated in sections according to the metering device. Ensure that the applicable section is thoroughly read and understood.

Flowrator Coils:

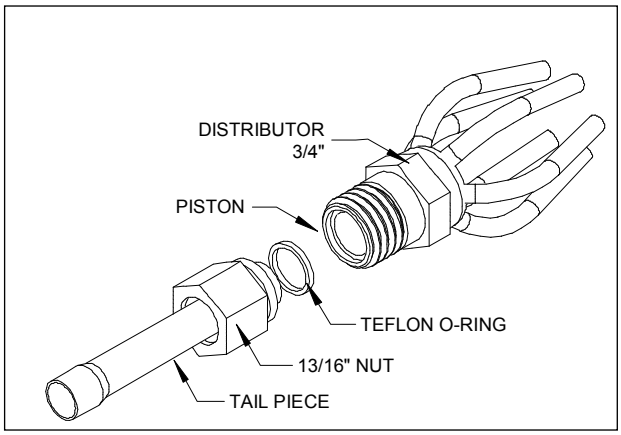

Figure. 2. Flowrator assy components

⚠ CAUTION

Use Piston sizes recommended by the outdoor unit manufacturer whenever possible. The piston should be sized according to the capacity of the outdoor unit.

⚠ WARNING

Failure to install the proper piston can lead to poor system performance and possible compressor damage.

During some installations a piston change may be required. If so the installer **MUST** change the piston. As stated earlier, use piston sizes recommended by the outdoor unit manufacturer. If a sizing chart is not available, use the piston size chart provided below to size the required piston. The size of the piston is stamped on the piston body. Use this chart when matching coil with an outdoor unit with a different nominal capacity than the coil.

Outdoor Capacity	Orifice Size–R22	Orifice Size-R410A
12,000	0.041	N/A
18,000	0.055	0.049
24,000	0.059	0.055
30,000	0.068	0.059
36,000	0.074	0.068
42,000	0.080	0.074
48,000	0.084	0.080
60,000	0.092	0.089

Table. 1. Piston Size Chart

Instruction for piston change

1. Turn the 13/16 nut once to release any residual pressure in the coil.

2. After ensuring that the coil is free of any residual pressure, disassemble the flowrator body completely using two wrenches. Distortion of the feeder tubes **SHOULD** be avoided.

3. The wrench used to clasp the nut should be turned in counter-clockwise direction to unscrew the nut.

4. Slide the 13/16 nut over the line set and separate the two halves of the flowrator.

⚠CAUTION

Pay close attention to the Teflon O-ring. Be sure to replace the O-ring to attain a proper seal. (The Teflon O-ring is located between the two halves of the flowrator)

5. Pull the piston out using a small wire or pick. Verify the piston size (size is typically stamped on the body of the piston). If a different piston size is required by the outdoor unit manufacturer replace the piston using the small wire provided with the piston kit.

⚠CAUTION

Pay close attention to the piston orientation. The pointed end of the piston **MUST** go into the distributor body/ towards the coil. Failure to ensure this orientation will cause the piston to be bypassed during operation which might damage the outdoor unit.

6. Assemble the two halves correctly and ensure that the white Teflon O-ring is present between the two halves.

7. Slide the 13/16 nut onto the distributor body.

8. Tighten the nut to a torque of approximately 10-30 ft-lbs. Do **NOT** over tighten the nut. This will hamper the piston movement during operation.

9. Slide the grommet back to position to prevent air leakage.

TXV Coils:

⚠WARNING

The sensing bulb and TXV body MUST be protected from overheating during brazing. The sensing bulb and TXV body must be covered using a quench cloth or wet cloth when brazing. Pointing the brazing flame away from the valve and sensing bulb provide partial protection only.

⚠CAUTION

Ensure that the TXV selected is compatible with the refrigerant used in the outdoor system (R22 or R410A). TXV caps are painted green for R22 or pink for R410A. In absence of color, the caps will be marked with the compatible refrigerant.

⚠CAUTION

The valves should be sized according to the capacity of the outdoor unit. Failure to install the right valve can lead to poor performance and possible compressor damage.

TXV Bulb Mounting

The orientation and location of the TXV bulb has a major influence on the system performance.

⚠CAUTION

Ensure that the TXV bulb is in direct contact with the suction/vapor line. Gap between the bulb and tube should be avoided. Failure to do so will impair the proper functioning of the TXV valve.

It is recommended that the TXV bulb be installed parallel to the ground (in a horizontal plane). The bulb position should be above and between 4 o'clock and 8 o'clock. Fig. 3 shows the recommended position for the TXV bulb installation in the horizontal plane.

The TXV sensing bulb **SHOULD** be mounted using the metal clamp provided. In order to obtain a good temperature reading and correct superheat control, the TXV sensing bulb must conform to ALL of the following criteria:

1) The sensing bulb **MUST** be in direct and continuous contact with the suction line
2) The sensing bulb should be mounted horizontally on the suction line.
3) The sensing bulb **MUST** be in direct and continuous contact with the suction line
4) The sensing bulb should be mounted horizontally on the suction line.

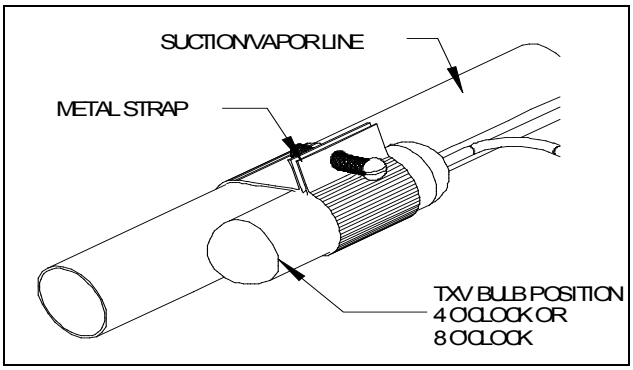

Fig. 3. Recommended location of the TXV bulb in a horizontal orientation

5) The sensing bulb **MUST** be mounted above and between the 4 and 8 o'clock position on the circumference of the suction line.
6) The sensing bulb **MUST** be insulated from outside air.

The mounting location and insulation guards THE sensing bulb from false reading due to hot outside air or liquid refrigerant formed inside the suction/vapor line.

As recommended earlier, the TXV sensing bulb should be mounted in a horizontal plane in relation to the suction/vapor line. However, in case such a mounting is not feasible and the sensing bulb has to be mounted vertically; then place the bulb as shown in Fig. 4.

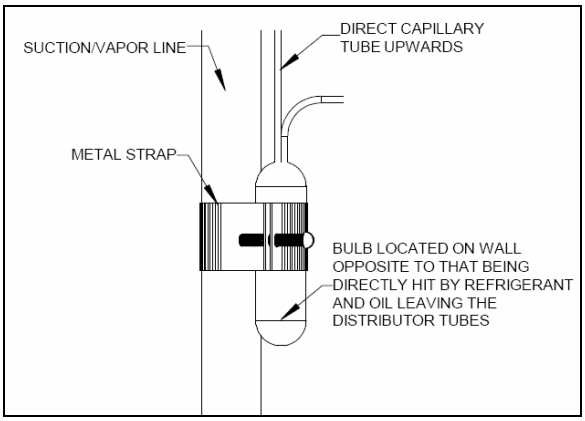

Fig. 4. Figure showing the sensing bulb mounted in a vertical orientation

⚠ CAUTION

If the TXV sensing bulb is mounted vertically; the capillary **MUST** be directed upwards. The bulb must be mounted on the wall opposite to that being directly hit by the refrigerant and oil leaving the distributor tubes.

Field – Installed Expansion Valve Coils

Remove the valve identification sticker from the valve and place it adjacent to the model number on unit name plate. When installing an expansion valve, it is not necessary to remove all the access panels and slide the coil out of the housing.

1) Disassemble the flowrator body using two wrenches. Unscrew the body with a counter-clockwise motion.
2) Replace the white Teflon seal in place (located between the halves).
3) Remove the existing flowrator piston using a small wire or pick.
4) Inspect the TXV box to confirm that the valve is compatible with the refrigerant in the system.
5) Remove the valve from the box and note the location of the inlet side (threaded male port) and the outlet side (female swivel nut port).
6) After ensuring that the white Teflon seal is still in place inside the flowrator body, screw the female swivel nut onto the flowrator body.
7) Place the attachment nut on the liquid line.
8) Braze the stub-out portion to the liquid line and let cool.

⚠ WARNING

Do not attempt to touch the braze joint while hot. Touching it may cause sever burns.

9) Remove the additional white Teflon seal ring from the box and place on the shoulder just inside the inlet port. Screw the nut attached to the stub-out portion of the flowrator body onto the inlet port of the TXV.
10) Tighten all connections taking care to use proper back up.

Some coils come with a Schrader valve on the suction line. If a Schrader port is present

11) Remove valve stem from the Schrader port mounted on the suction line
12) Screw flare nut on TXV equalization tube in to the Schrader valve stem

Typical expansion valve assembly is shown below in Fig. 5.

⚠ CAUTION

Using a non-bleed expansion valve may require the use of a hard-start kit. Follow the outdoor unit manufacturer's guidelines.

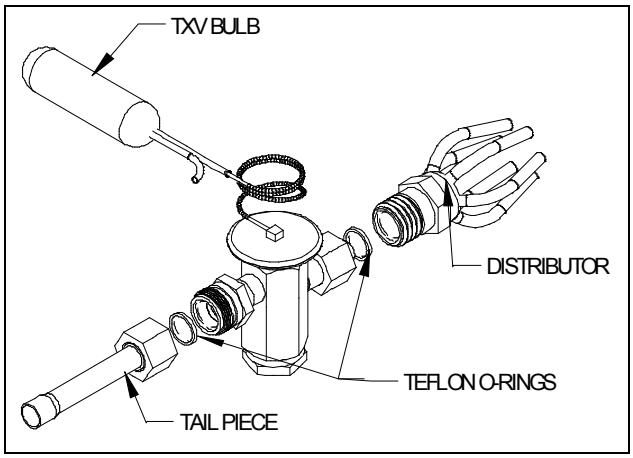

Fig. 5. Components of a typical TXV assembly

Coil Application

Vertical

CCG (Uncased Coils), VCG (Cased Upflow/ Downflow) and MCG (Multi-Position) can be installed in either an upflow or a downflow application. Fig 6 shows the typical configuration for the same.

⚠ CAUTION

When installing in conjunction with a gas furnace in a vertical orientation, ensure that there is 2” gap between the bottom of the drain pan and the outlet of the furnace.

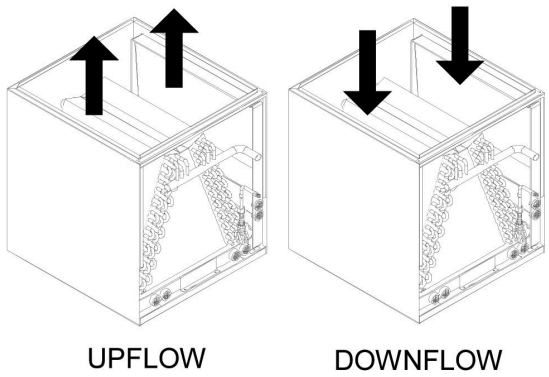

Fig. 6. Typical Vertical Application of Coils

⚠ CAUTION

To position the coil on a furnace:

1) Locate the air outlet of the furnace
2) Position the coil over/under the outlet after adjusting the flanges accordingly.
3) Place ductwork over the casing flanges

Note:
To set up a multi-position (MCG) and or upflow/downflow (VCG) coils for downflow application, install a 3” wide by 16” long galvanized metal plates on the outside of the coil, against the fins as shown in FIG.7.

⚠ WARNING

As mentioned elsewhere in this document in an application involving oil furnace a metal drain pan **MUST** be used. Coils installed on an oil furnace must have a minimum of six inches clearance between the top of the furnace and bottom of the drain pan.

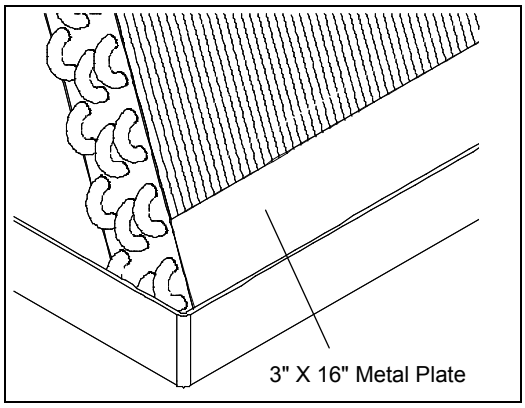

Fig. 7. Metal Plate location for a Downflow/ Counterflow Application

Horizontal

Multi-position coils (MCG) are shipped from the factory such that they can be installed in both vertical and horizontal application without any change to the coil. Cautions, warnings and instructions to install these in the vertical application are mentioned in the relevant section above. When installing these coils in the horizontal application, the details mentioned in this section must be followed.

Fig. 8 shows horizontal right and left application of the CE coils.

⚠ CAUTION

Coils are shipped from the factory for specific horizontal applications viz. horizontal right or horizontal left. Installer must ensure that the coil is installed in the orientation for which it was intended (horizontal drain pan side down). Failure to follow these instructions might lead to property and equipment damage.

Multiposition (MCG) coils come equipped with a horizontal drain pan (Plastic/Metal). The plastic drain pan is protected using a metal clip at the apex of the coil.

When installing in horizontal applications with airflow directed into the apex ensure the presence of a metal plate as shown in Fig 8. Absence of the plate in such an application might increase the chances of property damage due to fire or electric hazard.

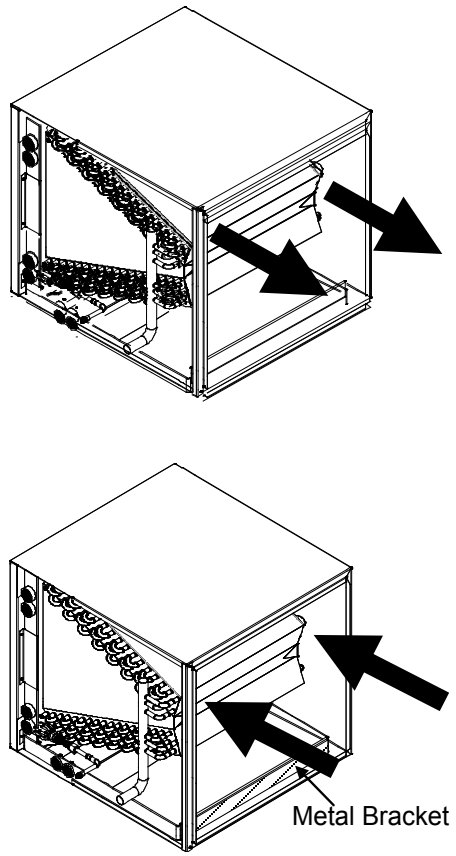

Fig. 8. Horizontal right application of a MCG coil

System Charging

⚠ CAUTION

An improperly charged system might cause degradation in system performance and may damage the compressor.

After installation of the coil, refer to the outdoor unit manufacturer for charging techniques and amount of charge.

1) For a downflow application do **NOT** exceed 350 cfm/ ton of airflow
2) Flowrator coils – Add refrigerant until the superheat measured at the outdoor unit suction/vapor line matches the superheat from the chart below
3) Expansion valve coils – Add refrigerant until the subcooling measured at the outdoor unit liquid line matches the subcooling recommendation of the outdoor manufacturer (typically 7º – 10º F). If chart is unavailable refer to chart below

SUPERHEAT AND SUBCOOL CHART

Outdoor Temp °F D.B. (°C)	Superheat °F (°C)			Subcooling°F (°C)		
	Min.	Nom.	Max.	Min.	Nom.	Max.
65 (18.3)	35 (-1.7)	40 (4.4)	45 (7.2)	12 (-11.1)	14 (-10)	15 (-9.4)
70 (21.1)	31 (-0.6)	35 (1.7)	39 (3.9)	12 (-11.1)	14 (-10)	15 (-9.4)
75 (23.9)	26 (-3.3)	30 (-1.1)	34 (1.1)	12 (-11.1)	14 (-10)	15 (-9.4)
80 (26.7)	22 (-5.6)	25 (-3.9)	28 (-2.2)	12 (-11.1)	14 (-10)	15 (-9.4)
85 (29.4)	17 (-8.3)	20 (-6.7)	23 (-5)	12 (-11.1)	14 (-10)	15 (-9.4)
90 (32.2)	13 (-10.6)	15 (-9.4)	17 (-8.3)	12 (-11.1)	14 (-10)	15 (-9.4)
95 (35.0)	8 (-13.3)	10 (-12.2)	12 (-11.11)	12 (-11.1)	14 (-10)	15 (-9.4)
100 (37.8)	4 (-15.6)	5 (-15)	6 (-14.4)	12 (-11.1)	14 (-10)	15 (-9.4)

Due to ongoing product improvements, specifications and dimensions are subject to change and correction without notice or incurring obligations. Determining the application and suitability for use of any product is the responsibility of the installer. Additionally, the installer is responsible for verifying dimensional data on the actual product prior to beginning any installation preparations.

Incentive and rebate programs have precise requirements as to product performance and certification. All products meet applicable regulations in effect on date of manufacture; however, certifications are not necessarily granted for the life of a product. Therefore, it is the responsibility of the applicant to determine whether a specific model qualifies for these incentive/rebate programs.

HEAT CONTROLLER

1900 Wellworth Ave., Jackson MI 49203 • Ph. 517-787-2100 • www.heatcontroller.com

A MAS Company