Product Catalog

Packaged Rooftop Air Conditioners
Voyager™ Light Commercial – Cooling, Gas/Electric
12.5 to 25 Tons, 60 Hz

March 2017

RT-PRC028AC-EN

Introduction

Packaged Rooftop Air Conditioners

Through the years, Trane has designed and developed the most complete line of Packaged Rooftop products available in the market today. Trane was the first to introduce the Micro—microelectronic unit controls—and has continued to improve and revolutionize this design concept.

The ReliaTel™ control platform offers the same great features and functionality as the original Micro, with additional benefits for greater application flexibility.

Voyager™ continues to provide the highest standards in quality and reliability, comfort, ease of service, and the performance of Trane light commercial products.

Trane customers demand products that provide exceptional reliability, meet stringent performance requirements, and are competitively priced. Trane delivers with Voyager.

Voyager features cutting edge technologies: reliable compressors, Trane engineered ReliaTel controls, computer-aided run testing, and Integrated Comfort™ Systems. So, whether you're the contractor, the engineer, or the owner, you can be certain Voyager products are built to meet your needs.

Copyright

This document and the information in it are the property of Trane, and may not be used or reproduced in whole or in part without written permission. Trane reserves the right to revise this publication at any time, and to make changes to its content without obligation to notify any person of such revision or change.

Trademarks

Trane and the Trane logo, CompleteCoat, Frostat, Integrated Comfort Systems, ReliaTel, Tracer, Voyager, are trademarks of Trane in the United States and other countries. All trademarks referenced in this document are the trademarks of their respective owners.

Revision Summary

- Added New 17½ & 25 Tons Standard Efficiency models.
- Updated Features & Benefits, Model Number Description, General Data, Electrical Data, Dimensional Data, Weight, Mechanical Specifications sections.

Table of Contents

Features and Benefits 4
- Standard Features and Available Options 4
- Standard Features 6
- Variety of Options 9
  - Factory Installed Options 9
  - Factory or Field Installed Options 13
  - Field Installed Options 14
- Other Benefits 16

Application Considerations 19

Selection Procedure 21
- Cooling Capacity 21
- Heating Capacity 22
- Air Delivery Selection 22

Model Number Description 23
- Model Number Notes 24

General Data 25

Performance Data 41

Controls 125
- Economizer Controls 125
- Zone Sensors 125
- Communication Interfaces 128

Electrical Data 129

Jobsite Connections 141

Dimensional Data 142

Weights 151

Mechanical Specifications 154
- Factory Installed Options 156
- Factory or Field Installed Options 158
- Field Installed Options 160

Features and Benefits

Note: *Packaged Rooftop units cooling, heating capacities, and efficiencies are AHRI certified within scope of AHRI Standard 340-360 (I-P) and ANSIZ21.47 and 10 CFR Part 431 pertaining to Commercial Warm Air Furnaces (gas heating units).*

Standard Features and Available Options

Table 1. Voyager™ Light Commercial control options — standard and optional

		Options[a]		
	Standard Features	Factory Installed	Factory or Field Installed	Field Installed
BACnet® Communications Interface (BCI)			X	
Discharge Line Thermostat	X			
Humidity Sensor				X
LonTalk® Communications Interface (LCI)			X	
ReliaTel™ Microprocessor Controls	X			
ReliaTel™ Options Module			X	
Thermostat				X
Trane® Air-Fi™ Wireless Communication Interface		X		
Trane® Communications Interface (TCI)			X	
Wireless Zone Sensor				X
Zone Sensors and Remote Zone Sensors				X

(a) Refer to model number description for option availability

Table 2. Voyager™ Light Commercial features - standard and optional

		Options[a]		
	Standard Features	Factory Installed	Factory or Field Installed	Field Installed
1-year Limited Parts Warranty	X			
5-year Limited Compressor Warranty	X			
5-year Limited Heat Exchanger Warranty (12½–17½ Tons); 1 Year on 20 and 25 Tons	X			
2” MERV 8 Filters or 2” MERV 13 Filters with Filter Removal Tool		X		
2” throwaway filters	X			
3 Stages of Cooling Capability on 12½–20 Tons, 4 Stages of Cooling Capability on 25 Tons (High Efficiency Units Only)	X			
Anti-Short Cycle Timer	X			
Barometric Relief			X	
Belt Drive Motors	X			
Clogged Filter/Fan Failure Switch			X	
CO_2 Sensor				X
CO_2 Sensor Wiring (Wiring Only)		X		
Colored and Numbered Wiring	X			
Complete Coat™ Microchannel Condenser Coil		X		
Condensate Overflow Switch		X		
Crankcase Heaters	X			
Dedicated Airflow	X			

Table 2. Voyager™ Light Commercial features - standard and optional

	Standard Features	Options[a]		
		Factory Installed	Factory or Field Installed	Field Installed
Dehumidification (Hot Gas Reheat)		X		
Digital Display Zone Sensor				X
Discharge Air Temperature Sensing Kit			X	
Easy Access Low Voltage Terminal Board (LTB)	X			
Economizer - Standard, Downflow			X	
Economizer - Standard, Horizontal				X
Electric Heaters			X	
Fault Detection & Diagnostics (FDD)		X		
Foil-Faced and Edge Captured Insulation	X			
Frostat™			X	
High and Low Static Drive Kits				X
High Efficiency Drum and Tube Heat Exchanger	X			
High Efficiency Gas Heat with Hot Surface Ignition	X			
High Efficiency Motors		X		
High Pressure Cutout	X			
High Short Circuit Current Rated (SCCR) Electrical Subsystem		X		
Hinged Access Doors		X		
Human Interface - 5 inch Color Touchscreen		X		
IAQ Sloped Condensate Drain Pan	X			
Indoor Fan Motor Shaft Grounding Ring			X	
Liquid Line Refrigerant Drier	X			
Low Ambient Cooling to 0°F	X			
Low Leak Economizer - Downflow			X	
Low Leak Economizer - Downflow and Horizontal				X
LP Conversion Kit				X
Manual Outside Air Dampers				X
Microchannel Type Condenser Coils	X			
Microchannel Type Evaporator Coils (Standard Efficiency Only)	X			
Modulating Gas Heat Furnace with a 2.5:1 Turndown Ratio		X		
Motorized Outside Air Dampers				X
Multi-Speed Indoor Fans		X		
Multiple Zone Variable Air Volume (MZVAV)		X		
Operating Charge of R-410A	X			
Oversized Motors			X	
Phase Monitor	X			
Powered Exhaust				X
Powered or Unpowered Convenience Outlet		X		
Provisions for Through-the-Base Gas Connections	X			
Quick Access Panels	X			
Quick Adjust Idler Arm Pulley	X			
Reference or Comparative Enthalpy			X	
Remote Potentiometer				X
Roof Curb (Downflow Only)				X

Table 2. Voyager™ Light Commercial features - standard and optional

	Standard Features	Options[a]		
		Factory Installed	Factory or Field Installed	Field Installed
Single Point Power	X			
Single Side Service	X			
Single Zone Variable Air Volume (SZ VAV)		X		
Stainless Steel Drain Pan		X		
Stainless Steel Heat Exchanger with 10 Year Warranty		X		
Standardized Components	X			
Supply and/or Return Air Smoke Detector		X		
Thermal Expansion Valve	X			
Through the Base Electrical Access		X		
Through the Base Electrical with Circuit Breaker		X		
Through the Base Electrical with Disconnect Switch		X		
Through the Base Gas Piping		X		
Tool-less Hail Guards			X	
U-shaped Airflow Pattern	X			
Variable Frequency Drive (Multispeed Indoor Fan, VAV, and Single Zone VAV)	X			
Ventilation Override Accessory				X

(a) Refer to model number description for option availability.

Note: *Most Factory Installed Options (FIOPS) available for Downflow Air Discharge units only. Please verify with ordering system for availability.*

Standard Features

Anti-Short Cycle Timer

Provides a 3 minute minimum “ON” time and 3 minute “OFF” time for compressors to enhance compressor reliability by assuring proper oil return.

Colored and Numbered Wiring

Save time and money tracing wires and diagnosing the unit.

Compressors

Voyager contains the best compressor technology available to achieve the highest possible performance. Dual compressors are outstanding for humidity control, light load cooling conditions and system back-up applications. Dual compressors are available on all models and allow for efficient cooling utilizing three stages of compressor operation (high efficiency 12½–20 Tons models only). 25 tons high efficiency units have 4 stages of cooling with a single compressor and tandem set (similar to variable speed).

Controls—ReliaTel™

ReliaTel microprocessor controls provide unit control for heating, cooling and ventilating utilizing input from sensors that measure indoor and outdoor temperature and other zone sensors. ReliaTel

also provides outputs for building automation systems and expanded diagnostics. For a complete list of ReliaTel offerings, refer to "Other Benefits," p. 16.

Conversionless Units

The dedicated design units (either downflow or horizontal) require no panel removal or alteration time to convert in the field — a major cost savings during installation. Horizontal units come complete with duct flanges so the contractor doesn't have to field fabricate them. These duct flanges are a time and cost saver.

Crankcase Heaters

These band or insertion heaters provide improved compressor reliability by warming the oil to prevent migration during off-cycles or low ambient conditions. These are standard on all Voyager models.

Discharge Line Thermostat

A bi-metal element discharge line thermostats installed as a standard feature on the discharge line of each system. This standard feature provides extra protection to the compressors against high discharge temperatures in case of loss of charge, extremely high ambient and other conditions which could drive the discharge temperature higher.

Efficiencies

Standard or High Efficiency Cooling available.

Easy Access Low Voltage Terminal Board

Voyager's Low Voltage Terminal Board is external to the electrical control cabinet. It is extremely easy to locate and attach the thermostat wire and test operation of all unit functions. This is another cost and time saving installation feature.

Foil Faced Insulation

All panels in the evaporator section of the unit have cleanable foil-faced insulation. All edges are either captured or sealed to ensure no insulation fibers get into the airstream.

Fork Pocket Access

Voyager™ has the ability to be forked from 3 sides.

Heat Exchanger—Drum and Tube

The cabinet features a drum and tube heat exchanger (pictured right) that is manufactured using aluminized steel with stainless steel components for maximum durability.

The requirement for cycle testing of heat exchangers is 10,000 cycles by ANSI Z21.47. This is the standard required by both UL and AGA for cycle test requirements.

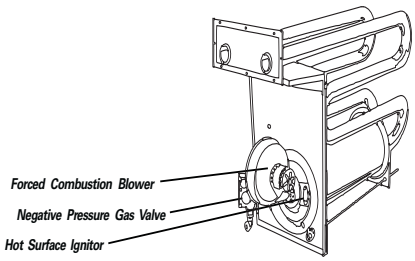

Trane requires the design to be tested to 2½ times this current standard. The drum and tube design has been tested and passed over 150,000 cycles, which is over 15 times the current ANSI cycling requirements. The negative pressure gas valve is used in the standard furnaces. This is one of our unique safety features. Modulating heaters use a pressure switch to ensure that the blower motor is operating before the gas valve is allowed to open.

The forced combustion blower supplies pre-mixed fuel through a single stainless steel burner screen into a sealed drum where ignition takes place. It is more reliable to operate and maintain than a multiple burner system. Modulating furnaces contain a metal fiber material to ensure proper flame distribution at low fire. The hot surface ignitor is a gas ignition device which doubles as a safety device utilizing a continuous test to prove the flame. The design is cycle tested at the factory for quality and reliability. Our gas/electric rooftops exceed all California seasonal efficiency requirements and perform even better than the California NO_x emission requirements.

Low Ambient Cooling

All Voyager microprocessor units have cooling capabilities down to 0°F as standard.

Low Voltage Connections

The wiring of the low voltage connections to the unit and the zone sensors is as simple as 1-1, 2-2, and 3-3. This simplified system makes it easy for the installer to wire.

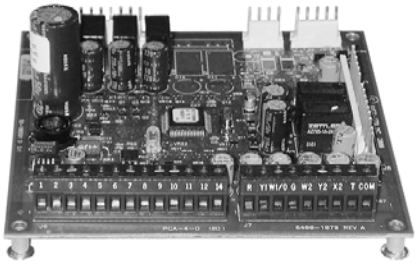

Microchannel Coils

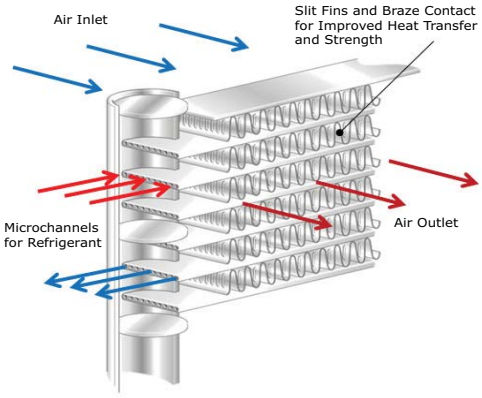

Microchannel coils are all-aluminum coils with fully-brazed construction. This design reduces risk of leaks and provides increased coil rigidity — making them more rugged on the jobsite. Their flat streamlined tubes with small ports and metallurgical tube-to-fin bond allow for exceptional heat transfer.

Microchannel all-aluminum construction provides several additional benefits:

- Light weight (simplifies coil handling)
- Easy to recycle
- Minimize galvanic corrosion

Motors

All indoor fan motors are belt drive as standard.

Pressure Cutouts

Low and high pressure cutouts are standard on all Voyager models.

Phase Monitor

Voyager features a three-phase line monitor module that protects against phase loss, phase reversal and phase unbalance. It is intended to protect compressors from reverse rotation. It has an operating input voltage range of 190–600 Vac, and LED indicators for ON and FAULT. There are no field adjustments and the module will automatically reset from a fault condition.

Quick-Access Panels

Remove three or more screws for access to the standardized internal components and wiring.

Quick-Adjust Slider Plate

With the Quick-Adjust Slider Plate (pictured right), the belt and sheaves can be quickly adjusted without moving the mounted fan motor. The result is a major savings in time and money.

Single Point Power

A single electrical connection powers the unit.

Single Side Service

Single side service is standard on all units.

Sloped Drain Pans

Every Voyager unit has a non-corrosive, sloped drain pan made of pre-painted steel and standard on all units.

Standardized Components

Components are placed in the same location on all Voyager units. Familiarize yourself with one Voyager and you are familiar with every Voyager. Due to standardized components throughout the Voyager line, contractors/owners can stock fewer parts.

U-Shaped Airflow Pattern

The U-shaped airflow allows for improved static capabilities.

Variable Frequency Drives - VFD (Multispeed Indoor Fan, VAV, and SZ VAV Only)

Variable Frequency Drives are factory installed and tested to provide supply fan motor speed modulation. VFDs on the supply fan, as compared to inlet guide vanes or discharge dampers, are quieter, more efficient, and are eligible for utility rebates. All VFDs are designed to allow bypass if required. Bypass control will simply provide full nominal airflow in the event of drive failure. Bypass mode is indicated in the unit wiring manual. Modulating gas heat models with SZVAV allow tighter space temperature control with less temperature swing.

Variety of Options[1]

Factory Installed Options

Trane® Air-Fi™ Wireless

Trane® Air-Fi™ wireless communication is a reliable, flexible solution that frees you from the hassles associated with wired components for your building controls system. With Air-Fi wireless, you get easy problem solving, efficient performance, and cost savings over the life of the equipment.

CO_2 Sensor Wiring

This is the unit wiring for field installed $C0_2$ sensors. Factory-installed $C0_2$ sensor wiring saves time and ensures proper unit connections for the field installed $C0_2$ sensor kits.

[1] Refer to "Model Number Description," p. 23 for option availability.

Complete Coat™ Condenser Coil

The cathodic epoxy type electrodisposition coating is formulated for high edge build to a number of different types of heat exchangers. The coating is selected to provide excellent resistance and durability to corrosive effects of alkalies, acids, alcohols, petroleum, seawater, salt air, and corrosive environments. This coating is available for microchannel coils only.

Circuit Breaker (Required with Through-the-Base Electrical)

This option is a factory installed thermal magnetic, molded case, HACR Circuit Breaker with provisions for through the base electrical connections. Available on all models.

Condensate Overflow Switch

A condensate overflow switch is available to shut the unit down in the event that the condensate drain line becomes clogged. This option protects the unit from water overflowing from the drain pan and entering the base of the units.

Dehumidification (Hot Gas Reheat)

This option allows for increased outdoor air ventilation. It reduces humidity levels while increasing comfort level in the air space. Cooling can operate without a demand for dehumidification. The hot gas reheat coil is designed to deliver maximum reheat temperature.

Disconnect Switch (Required with Through-the-Base Electrical)

Factory installed 3-pole, molded case, disconnect switch with provisions for through the base electrical connections are available. Available on all models.
Codes require a method of assured unit shutdown for servicing. Field-installed disconnects sometimes interfere with service access. Factory installation of unit disconnects reduces costs, assures proper mounting and provides the opportunity to upgrade to unit circuit breaker protection.

Fault Detection & Diagnostics (FDD)

This offering meets the mandatory requirement of CA Title 24 of fully configurable diagnostics allowing fault history and reading fault codes at the unit.This option provides detection of the following faults: Air temperature sensor failure/fault and notification of acceptable economizer mode.The FDD system shall be certified by the Energy Commission as meeting the requirements.

High Efficiency Filtration

Voyager units offer a variety of high efficiency filtration options. MERV 8 and MERV 13 filters provide additional filtration beyond the capabilities of typical 2” throwaway filters. Also, when MERV 8 or MERV 13 filters are ordered, units come equipped with a filter removal tool.

High Efficiency Motors

High efficiency motors are available with efficiency ratings from 86.5 up to 91.0. It is not available for all models.

High Short Circuit Current Rating (SCCR)

Voyager rooftop units now have an optional high short circuit current rated electrical subsystem for units with an MOP above 60A. This option is a perfect fit for applications that need protection against high potential fault currents. This option also includes individual over current protection for each compressor and the indoor fan, as well as a dedicated over current protection to the

condenser fan motor(s). When the high SCCR is ordered, the control box will have components separated into two sections - high and low voltage components.

Hinged Access Doors

These doors permit easy access to the filter, fan/heat, and compressor/control sections. They reduce the potential roof damage from screws or sharp access door corners.

Human Interface

The 5 inch Color Touchscreen Human Interface provides an intuitive user interface to the rooftop unit that speeds up unit commissioning, shortens unit troubleshooting times, and enhances preventative maintenance measures. The human interface includes several features such as:

- Data trending capabilities by means of time series graphs
- Historical alarm messages
- Real-time sensor measurements
- On board system setpoints
- USB port that enables the downloading of component runtime information as well as trended historical sensor data
- Customizable reports

Modulating Gas Heat with a 2.5:1 Turndown Ratio

Upon receiving a call for heat, modulating gas heat units with a 2.5:1 turndown ratio light their burner at full fire (100%). After the burner is lit, the unit controls will monitor the discharge air temperature and modulate the input rate down to match the load.

Note: *Modulating gas heat units are equipped with a stainless steel heat exchanger as standard.*

Multi-Speed Indoor Fan System

Multi-speed indoor fan system is designed for use in applications for meeting the minimum requirement of CA Title 24. This system incorporates a multi-speed fan control to change the speed of the fan to 67% of full airflow based off compressor stages.

Multiple-Zone VAV Control

A multiple-zone VAV (MZVAV) system consists of a packaged rooftop unit that serves several individually controlled zones. Each zone is equipped with a VAV terminal unit that varies the quantity of air delivered to maintain the desired temperature in that zone. The rooftop unit controller varies the speed of the indoor fan to maintain the static pressure in the supply ductwork at a setpoint, ensuring that all zones receive the necessary quantity of air. In addition, cooling capacity is cycled to maintain the supply air temperature at the desired setpoint.

For decades, Trane has been an industry leader in rooftop VAV systems. Now, multiple-zone VAV control is available in Trane's light commercial rooftop platform (3-25 tons).

Novar Unit Controls

Novar 3051 and 2024 are available for Voyager Cooling and Gas/Electric models.

Powered or Unpowered Convenience Outlet

This option is a GFCI, 120V/15amp, 2-plug, convenience outlet, either powered or unpowered. This option can only be ordered when Through the Base Electrical with either the Disconnect Switch or Circuit Breaker option is ordered. This option is available on all models.

Single Zone VAV - One Zone Variable Air Volume Mode

Note: *Single Zone VAV is designed to be used with a zone sensor. If a unit is configured for Single Zone VAV operation but is connected to a thermostat, the control will revert to multi-speed (2-Speed) indoor fan control. (See "Multi-Speed Indoor Fan System" above.)*

Single zone VAV is designed for use in single zone applications like gymnasiums, auditoriums, manufacturing facilities, retail box stores, and any large open spaces, where there is a lot of diversity in the load profile. Single Zone VAV (SZ VAV) is an ideal replacement to "yesterday's" constant volume (CV) systems, by reducing operating costs while improving occupant comfort. SZ VAV systems combine Trane application, control and system integration knowledge to exactly match fan speed with cooling and heating loads, regardless of the operating condition. Trane algorithms meet/exceed ASHRAE 90.1- 2010, SZ VAV energy-saving recommendations, and those of CA Title 24. The result is an optimized balance between zone temperature control and system energy savings. Depending on your specific application, energy savings can be as much as 20%.

Note: *Building system modeling in energy simulation software like TRACE is recommended to evaluate performance improvements for your application.*

SZ VAV is fully integrated into the ReliaTel Control system and is available today. It provides the simplest and fastest commissioning in the industry through proven factory-installed, wired, and tested system controllers. All control modules, logic and sensors are factory installed, and tested to assure the highest quality and most reliable system available. This means no special programming of algorithms, or hunting at the jobsite for sensors, boards, etc. that need to be installed in the field. Single zone VAV is a quick and simple solution for many applications and is available from your most trusted rooftop VAV system solution provider- Trane.

Stainless Steel Drain Pan

For excellent corrosion and oxidation resistance, the optional stainless steel drain pan provides a cleanable surface that complement other IAQ solutions such as high efficiency filtration (MERV 8 or 13), demand control ventilation (CO_2), and hot gas reheat.

Stainless Steel Heat Exchanger

The optional stainless steel heat exchanger is constructed of 304 stainless steel. It is resistant to corrosion and oxidation and easy to clean. The high strength to weight ratio allows for high ventilation rates with gas units and comes standard with a modulating gas heat option. With this option, a 10-year stainless steel heat exchanger warranty is standard.

Supply, Return, and Plenum Air Smoke Detector

With this option (pictured right) installed, if smoke is detected, all unit operation will be shut down. Reset will be manual at the unit. Return Air Smoke Detectors require minimum allowable airflow when used with certain models.

Supply and/or Return Smoke Detectors may not be used with the Plenum Smoke Detector.

Through-the-Base Electrical Utility Access

An electrical service entrance shall be provided allowing electrical access for both control and main power connections inside the curb and through the base of the unit. Option will allow for field installation of liquid-tight conduit and an external field installed disconnect switch.

Factory provided through the base openings simplify wiring and piping. Because these utility openings frequently minimize the number of roof penetrations, the integrity of roofing materials is enhanced.

Through-the-Base Gas Piping (Gas/Electric Only)

This option (pictured right) shall have all piping necessary including, black steel, manual gas shut-off valve, elbows, and union. This assembly will require minor field labor to install.

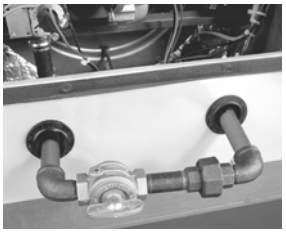

Factory or Field Installed Options[1]

BACnet™ Communications Interface

The BACnet communications interface allows the unit to communicate directly with a generic open protocol BACnet MS/TP Network Building Automation System Controls.

Barometric Relief

Designed to be used on downflow units, barometric relief is an unpowered means of relieving excess building pressure.

Clogged Filter/Fan Failure Switch

A dedicated differential pressure switch is available to achieve active fan failure indication and/or clogged filter indication. These sensors allow a zone sensor service light or Integrated Comfort System to indicate a dirty filter or a fan that's not working. The field installation charges for these valuable feedback devices often eliminate them from consideration. Factory installation can make such features a good investment.

Discharge Air Temperature Sensing Kit

Provides true discharge air temperature sensing in heating models. The kit is functional only with the ReliaTel Options Module.

Economizer - Standard, Downflow

Economizers are equipped with either dry bulb, reference, or comparative enthalpy sensing. These economizers provide free cooling as the outdoor temperature and/or humidity decreases. Correctly installed, they offer a valuable energy savings. Factory-installed economizers save time and ensure proper installation.

Note: *Factory-installed economizers require some field set-up.*

Economizer - Low Leak, Downflow

This accessory meets low leak requirements for ASHRAE 90.1, IECC, and CA Title 24 standards (3 cfm/ft^2@1" wg exterior air, 4 cfm/ft^2@1" wg return air). This option allows 100% outdoor air supply from 0-100% modulating dampers and is standard with barometric relief. It can be paired with powered exhaust for additional building pressure relief. This option can be paired with or without Fault Detection & Diagnostics (FDD) to meet current mandatory CA Title 24 requirements.

[1] Refer to "Model Number Description," p. 23 for option availability.

Available on downflow units only. The economizers come with three control options, dry bulb and reference or comparative enthalpy (optional).

Electric Heaters

Electric heat modules are available within the basic unit. If ordering the Through the Base Electrical option with an Electrical Heater, the heater must be factory installed.

Frostat™

A capillary bulb embedded in the face of the evaporator coil or a thermostat on the suction line monitors coil temperature to prevent evaporator icing and protect the compressor. Recommended for applications with low leaving air temperatures, low airflow and/or high latent load applications.

Note: *Frostat is standard on all Single-Zone VAV, Multiple-Zone VAV, and high efficiency units.*

Indoor Fan Motor Shaft Grounding Ring

Shaft grounding rings are used on all VFD driven motors to provide a conductive discharge path away from the motor bearings to ground. Bearing Protection Rings shall be maintenance free circumferential rings of conductive micro fibers that discharge voltages to ground.

LonTalk® Communications Interface

The LonTalk communications interface allows the unit to communicate as a Tracer™ LCI-V device or directly with generic LonTalk Network Building Automation System Controls.

Oversized Motors

Factory or field installed oversized motors are available for high static applications.

Reference or Comparative Enthalpy

Measures and communicates humidity while maximizing comfort control.

ReliaTel Options Module (RTOM)

The RTOM monitors the supply fan proving, clogged filter, supply air temperature, exhaust fan setpoint, dehumidification setpoint, supply air tempering, Frostat™ and smoke detector.

Note: *The RTOM is standard on high efficiency units.*

Tool-less Hail Guards

Tool-less, hail protection quality coil guards (pictured right) shall be either factory or field-installed for condenser coil protection. This option protects the condenser coil from vandalism and/or hail damage.

Trane Communication Interface (TCI)

Available factory or field installed. This module when applied with the ReliaTel™ easily interfaces with Trane's Integrated Comfort™ System.

Field Installed Options[1]

CO_2 Sensor - Demand Control Ventilation (DCV)

Demand-controlled ventilation (DCV) is a control strategy that responds to the actual demand (need) for ventilation by regulating the rate at which the HVAC system brings outdoor air into the building. A CO_2 sensor measures the concentration (parts per million, ppm) of CO_2 (Carbon Dioxide) in the air. As the CO_2 concentration changes, the outside air damper modulates to meet the current ventilation needs of the zone. The CO_2 sensor kit is available as a field installed

[1] Refer to "Model Number Description," p. 23 for option availability.

accessory. Two field installed kits are offered; $C0_2$ sensor and wiring or $C0_2$ sensor only. The $C0_2$ sensor only kit should be ordered with factory installed $C0_2$ sensor wiring. Factory installed $C0_2$ sensor wiring saves set-up time and ensures proper unit connections for the $C0_2$ sensor.

Dampers

0–25 percent manual or 0–50 percent motorized outside air dampers are available.

Digital Display Zone Sensor

The Digital LCD (Liquid Crystal Display) zone sensor has the look and functionality of standard zone sensors.

Economizer - Standard, Horizontal

Economizers are equipped with either dry bulb or reference or comparative enthalpy sensing. These economizers provide free cooling as the outdoor temperature and/or humidity decreases. Correctly installed, they offer a valuable energy savings.

Economizer - Low Leak, Downflow & Horizontal

This accessory meets low leak requirements for ASHRAE 90.1, IECC, and CA Title 24 standards (3 cfm/ft^2@1" wg exterior air, 4 cfm/ft^2@1" wg return air). This option allows 100% outdoor air supply from 0-100% modulating dampers and is standard with barometric relief. It can be paired with powered exhaust for additional building pressure relief.

Humidity Sensor/Humidistat

Used in conjunction with our Dehumidification (Hot Gas Reheat) units to provide outstanding humidity control and comfort. Humidity sensors can be wall or duct mounted and set for levels between 40% and 60%.

LP Conversion Kit

Provided for field conversion of gas/electric units from natural gas to propane.

Powered Exhaust

This option is available on downflow units and provides exhaust of the return air, when using a downflow economizer, to maintain proper building pressurization. Great for relieving most building overpressurization problems.

Remote Potentiometer

When properly installed in the economizer control circuitry, this accessory provides a remote variable resistance to enable the operator to adjust the minimum damper position.

Roof Curbs

Available for downflow units. Only two roof curbs for the entire Voyager line simplifies curb selection.

Static Drive Accessories

Available on many models, this high and low static drive accessories extend the capability of the standard motor. Avoid expensive motors and operating costs by installing this optimized sheave accessory.

Ventilation Override Accessory

With the Ventilation Override Accessory installed, the unit can be set to transition to up to 3 different pre-programmed sequences for Smoke Purge, Pressurization and Exhaust. The transition occurs when a binary input on the RTOM is closed (shorted). This would typically be a hard wired relay output from a smoke detector or fire control panel. The ventilation override kit is available as a field installed accessory.

Wireless Zone Sensor

LCD display that provides heat, cool, auto, or off. Includes two temperature setpoints and a lockable setting with °F or °C indicators.

Zone Sensors/Thermostats

Available in programmable, automatic and manual styles.

Note: *Zone sensors required for units configured for Single Zone VAV indoor fan system control to enable Single Zone VAV functionality.*

Other Benefits

Cabinet Integrity

For added water integrity, Voyager has a raised 1-1/8″ lip around the supply and return of the downflow units to prevent water from blowing into the ductwork.

Easy to Install, Service and Maintain

Because today's owners are very cost-conscious when it comes to service and maintenance, Voyager was designed with direct input from service contractors. This valuable information helped to design a product that would get the serviceman off the job quicker and save the owner money. Voyager does this by offering outstanding standard features enhanced by a variety of factory and field installed options, multiple control options, rigorously tested proven designs and superior product and technical support.

Outstanding Airflow Distribution

Airflow is outstanding. The Voyager can replace an older machine with old ductwork and, in many cases, improve the comfort through better air distribution.

ReliaTel™ Controls Benefits

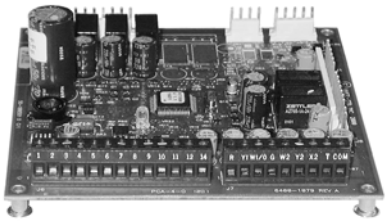

ReliaTel controls provide unit control for heating, cooling and ventilating by utilizing input from sensors that measure outdoor and indoor temperature.

Quality and Reliability are enhanced through ReliaTel control and logic:

- Prevents the unit from short cycling, considerably improving compressor life.
- Ensures the compressor will run for a specific amount of time which allows oil to return for better lubrication, enhancing the reliability of the compressor.

Voyager with ReliaTel reduces the number of components required to operate the unit, thereby reducing possibilities for component failure.

ReliaTel Makes Installing and Servicing Easy

ReliaTel eliminates the need for field installed anti-shortcycle timer and time delay relays.

ReliaTel controls provide these functions as an integral part of the unit. The contractor no longer has to purchase these controls as options and pay to install them. The wiring of the low voltage connections to the unit and the zone sensors is as easy as 1-1, 2-2, and 3-3. This simplified system makes wiring easier for the installer.

ReliaTel Makes Testing Easy

ReliaTel requires no special tools to run Voyager unit through its paces. Simply place a jumper between Test 1 and Test 2 terminals on the Low Voltage Terminal Board and the unit will walk through its operational steps automatically.

The unit automatically returns control to the zone sensor after stepping through the test mode a single time, even if the jumper is left on the unit.
As long as the unit has power and the "system on" LED is lit, ReliaTel is operational. The light indicates that the controls are functioning properly.
ReliaTel features expanded diagnostic capabilities when utilized with Trane Integrated Comfort™ Systems.
Some zone sensor options have central control panel lights which indicate the mode the unit is in and possible diagnostic information (dirty filters for example).

Other ReliaTel Benefits

The ReliaTel built-in anti-shortcycle timer, time delay relay and minimum "on" time control functions are factory tested to assure proper operation. ReliaTel softens electrical "spikes" by staging on fans, compressors and heaters. Intelligent Fallback is a benefit to the building occupant. If a component goes astray, the unit will continue to operate at predetermined temperature setpoint.

Intelligent Anticipation is a standard ReliaTel feature. It functions continuously as ReliaTel and zone sensor(s) work together in harmony to provide much tighter comfort control than conventional electro-mechanical thermostats.

The same ReliaTel Board fits all Packaged Gas/Electric, Cooling, and Heat Pump models. This provides standardization of parts for contractors. Less money is tied up in inventory with ReliaTel.

Rigorous Testing

All of Voyager's designs were rigorously rain tested at the factory to ensure water integrity. Voyager units incorporate either a one piece top or the Trane-Tite-Top (T3). Each part of the top (either two or three pieces) overlaps in such a way that water cannot leak into the unit. These overlapped edges are gasketed and sealed to ensure superior water integrity.

Actual shipping tests were performed to determine packaging requirements. Units were test shipped around the country to determine the best packaging. Factory shake and drop tests were used as part of the package design process to help assure that the unit arrives at the job site in top condition.

Rigging tests include lifting a unit into the air and letting it drop one foot, assuring that the lifting lugs and rails hold up under stress. For the microchannel coils, the supplier will perform the leak check at 450 psig. The completely assembled refrigerant system is leak tested at a minimum of 225 psig with a refrigerant and nitrogen mixture.

All parts are inspected at the point of final assembly. Sub-standard parts are identified and rejected immediately. Every unit receives a 100% unit run test before leaving the production line to make sure it lives up to rigorous Trane requirements.

Unmatched Support

Trane Sales Representatives are a Support Group that can assist you with:

- Product
- Application
- Service
- Training
- Special Applications
- Specifications
- Computer Programs and much more

VariTrac® – Changeover-Bypass System

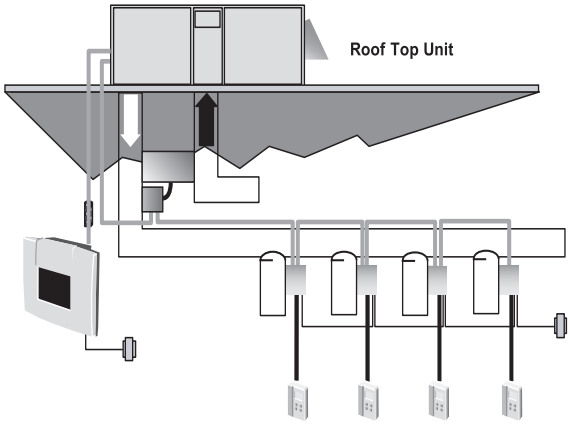

A changeover-bypass system consists of a packaged rooftop unit that serves several individually controlled zones. Each zone is equipped with a damper that varies the quantity of air delivered to maintain the desired temperature in that zone. However, unlike a conventional multiple-zone VAV system, the fan inside the rooftop unit operates at a constant speed. Any unneeded air is diverted to the return air stream through a bypass damper.

The term “changeover” refers to how this system handles the cooling and heating requirements of the building. The central rooftop unit can provide either cooled or heated air, and it makes this decision by periodically “polling” the zones.

Note: *VariTrac is for Voyager units with constant-speed indoor fan control. It is not recommended for use with Multiple-Speed Indoor Fan Control, Single-Zone VAV Control, or Multiple-Zone VAV Control.*

Application Considerations

Application of this product should be within the cataloged airflow and cooling considerations.

Air-Fi™ Wireless

Please refer to Air-Fi Network Design Installation, Operation, and Maintenance manual BAS-SVX55*-EN for additional details on applications with factory installed wireless.

Barometric Relief

This product line offers an optional barometric relief damper for use in conjunction with economizer option. This accessory consists of gravity dampers which open with increased pressure. As the building air pressure increases, the pressure in the unit return air section also increases, opening the dampers and relieving the conditioned space.

Note: *The effectiveness of barometric relief damper during economizing operation is limited, depending on the pressure drop of the return-air path. For some applications, powered exhaust may be better suited for preventing over-pressurization when economizing.*

Clearance Requirements

The recommended clearances identified with unit dimensions should be maintained to ensure adequate serviceability, maximum capacity and peak operating efficiency. Actual clearances which appear inadequate should be reviewed with local Trane sales personnel.

Complete Coat™ Microchannel Condenser Coil

The cathodic epoxy type electrodisposition coating is formulated for high edge build to a number of different types of heat exchangers. The coating is selected to provide excellent resistance and durability to corrosive effects of alkalies, acids, alcohols, petroleum, seawater, salt air, and corrosive environments. This coating shall be available on microchannel condenser coils.

Condensate Trap

The evaporator is a draw-through configuration. A trap must be field provided prior to start-up on the cooling cycle.

Dual Compressors — 3 Stages of Cooling (12½–20 Tons)

Using the ReliaTel™ microprocessor controls, the Voyager™ high efficiency line can provide three stages of cooling, allowing for a more efficient and comfortable cooling operation.

Important: *All high efficiency products will have intertwined evaporator coils as standard. No face split coils are allowed with 3 or 4 stages of cooling.*

Note: *Standard efficiency models do not have 3 stages of cooling operation.*

4 Stages of Cooling (25 Tons)

25 tons high efficiency units have 4 stages of cooling with a single compressor and tandem set (similar to variable speed).

Heating Operation

The heat exchanger is manufactured with aluminized steel. To prevent condensation within the heat exchanger, do not exceed 50 percent outside air or a minimum mixed air temperature of 40°F.

Optional Stainless Steel Heat Exchanger

The optional stainless steel heat exchanger is manufactured with 304 stainless steel. To prevent corrosion and prolong heat exchanger reliability, the minimum mixed air temperature allowed across the heat exchanger is 20°F. The stainless steel heat exchanger option is an excellent option that compliments the dehumidification package and is used in conjunction with the modulating heat option. Whenever high outside air or outside applications exist, these options should be utilized.

Low Ambient Cooling

The Voyager line features, with ReliaTel™ microprocessor controls, low ambient cooling down to 0°F. The following options need to be included/considered when low ambient applications are required: continuous fan operation, crankcase heaters (standard), thermal expansion valves, frostat. Contact your local Trane Representative for more assistance with low ambient cooling applications.

Unit Pitch

These units have sloped condensate drain pans. Units must be installed level. Any unit slope must be toward access side of the unit.

Low Airflow

Unit applications designed for airflow below 320 cfm/ton are available on cooling only units and gas heat units equipped with modulating gas heat. Units must be high efficiency units with dehumidification (hot gas reheat) or TXV with Frostat and Crankcase heaters. Electric heat is restricted below 320 cfm/ton. Standard efficiency units are restricted below 250 cfm/ton. Multi-speed or single zone VAV applications are capable of running below 320 cfm/ton during low speed airflow operation, but "full" airflow must be set to 320 cfm/ton or higher.

VariTrac®

VariTrac is for Voyager units with constant-speed indoor fan control. It is not recommended for use with Multiple-Speed Indoor Fan Control, Single-Zone VAV Control, or Multiple-Zone VAV Control.

Selection Procedure

Cooling Capacity

Note: *Cooling Capacity Procedure is the same for cooling (T*) and gas/electric (Y*).*

Step 1.

Calculate the building's total and sensible cooling loads at design conditions. Use the following calculation methods or any other standard accepted method. Factors used in unit selection:

Total Cooling Load: 180 MBh
Sensible Cooling Load: 126 MBh
Airflow: 6000 cfm
Electrical Characteristics: 460/60/3
Summer Design Conditions: Entering Evaporator Coil: 80 DB, 67 WB Outdoor Ambient: 95 DB
External Static Pressure: 0.39 in. wg
Rooftop—downflow configuration
Accessories

- Roof curb
- Economizer
- Electric Heat

Step 2.

As a starting point, a rough determination must be made of the size of the unit. The final selection will be made after examining the performance at the given conditions. Divide the total cooling load by nominal Btu/h per ton (12 MBh per ton); then round up to the nearest unit size.

180 MBh / 12 MBh = 15.0 tons

Step 3.

Table 18, p. 42 shows that a TSD180F4 has a **gross** cooling capacity of 186.1 MBh and 139.1 MBh sensible capacity at 6000 cfm and 95 DB outdoor ambient with 80 DB, 67 WB air entering the evaporator.

To Find Capacity at Intermediate Conditions Not in the Table.

When the design conditions are between two numbers that are in the capacity table, interpolation is required to approximate the capacity.

Note: *Extrapolation outside of the table conditions is not recommended.*

Step 4.

In order to select the correct unit which meets the building's requirements, the fan motor heat must be deducted from the gross cooling capacity. The amount of heat that the fan motor generates is dependent on the effort by the motor—cfm and static pressure. To determine the total unit static pressure you add the external static pressure to the additional static related by the added features:

External Static Duct System	0.39 wg
Standard Filter 2 in. from Table 89, p. 120	0.06 wg
Economizer from Table 89, p. 120 (100% Return Air)	0.04 wg
Electric Heater Size 36 kW from Table 89, p. 120	0.07 wg
(Reference "Heating Capacity," p. 22 for determination of heater size.) No additional static add for gas/heat exchanger.	
Total Static Pressure	0.56 wg

Note: *The Evaporator Fan Performance Table 49, p. 83 has already accounted for the pressure drop for standard filters and wet coils (see note below Table 49). Therefore, the actual total static pressure is 0.56 - 0.06 (from Table 89, p. 120 = 0.50 wg).*

With 6000 cfm and 0.50 wg.
Table 49, p. 83 shows 1.95 bhp for this unit. Note below the table gives a formula to calculate Fan Motor Heat,
3.15 x bhp = MBh.
3.15 x 1.95 = 6.14 MBh.

Now subtract the fan motor heat from the gross cooling capacity of the unit:
Net Total Cooling Capacity = 186.1 MBh - 6.14 = 179.96 MBh.

Net Sensible Cooling Capacity = 139.1 MBh - 6.14 = 132.96 MBh.

Step 5.

If the performance will not meet the required load of the building—total or sensible cooling load, try a selection at the next higher size unit.

Heating Capacity

Note: *Heating capacity procedures DIFFER for cooling (T*) and gas/electric (Y*) units.*

Step 1.

Calculate the building heating load.

Step 2.

Size the system heating capacity to match the calculated building heating load. The following are building heating requirements:

T* cooling units:
460 volt/3 phase Power Supply
Total heating load of 115.0 MBh
6000 cfm

The electric heat accessory capacities are listed in Table 91, p. 122. From the table, a 36 kW heater will deliver 122.94 MBh at 480 volts. In order to determine capacity at 460 volts, the heater voltage correction factor from Table 92, p. 123 must be used. Therefore, 122.94 MBh x .94 (voltage correction factor) = 115.6 MBh.

Y* gas/electric: Fuel natural gas total heating load of 195 MBh. Table Table 90, p. 122 shows 250 MBh and 350 MBh input models. The output capacities of these furnaces are 203 MBh and 284 MBh respectively. The low heat model with 203 MBh output best matches the building requirements.

Air Delivery Selection

Note: *Air Delivery procedures is the same for cooling (T*) and gas/electric (Y*) units.*

External static pressure drop through the air distribution system has been calculated to be 0.50 inches of water. From Table 89, p. 120 static pressure drop through the economizer is 0.04 and the 36 kW heater is 0.07 inches of water (0.39 + 0.04 + 0.07). Enter Table 49, p. 83 for a TSD180F4 at 6000 cfm and 0.50 static pressure. The standard motor at 533 rpm will give the desired airflow at a rated bhp of 1.92.

Model Number Description

Y	S	D	1	5	0	G	3	R	Z	B	0	0
1	2	3	4	5	6	7	8	9	10	11	12	13

Digit 1 — Unit Type

T = Packaged Cooling, Electric Heat
Y = Packaged Cooling, Gas Heat

Digit 2 — Efficiency

S = Standard Efficiency
H = High Efficiency

Digit 3 — Airflow Configuration

D = Downflow
H = Horizontal

Digit 4, 5, 6 — Nominal Gross Cooling Capacity (MBh)

150 = 12½ Tons
180 = 15 Tons
210 = 17½ Tons, 60Hz DOE 2018
211 = 17½ Tons, 60Hz
240 = 20 Tons
300 = 25 Tons, 60Hz DOE 2018
301 = 25 Tons, 60Hz

Digit 7 — Major Design Sequence

G = ASHRAE 90.1-2013 (Fan/Compressor Staging)[13] or Microchannel Type Evaporator & Condenser Coils

Digit 8 — Voltage Selection

3 = 208-230/60/3
4 = 460/60/3
W = 575/60/3
K = 380/60/3

Digit 9 — Unit Controls

R = Reliatel

Digit 10 — Heating Capacity

Note: *(Applicable to Digit 1 T models only)*

0 = No Heat
G = 18 kW Electric Heat
K = 27 kW Electric Heat
N = 36 kW Electric Heat
P = 54 kW Electric Heat
R = 72 kW Electric Heat

Note: *(Applicable to Digit 1 Y models only)*

H = Gas Heat - High
L = Gas Heat - Low
V = Gas Heat - SS Ht Ex - Modulating
X = Gas Heat - SS Ht Ex - Low
Z = Gas Heat - SS Ht Ex - High

Digit 11 — Minor Design Sequence

Digit 12, 13 — Service Sequence

00 = None
01 = 18mm Microchannel Condenser Coil

Note: *'01' only available on select models.*

Digit 14 — Fresh Air Selection

0 = No Fresh Air
D = Econ Dry Bulb w/ Barometric Relief[1]
F = Econ Reference Enthaply w/ Barometric Relief[1]
H = Econ Comparative Enthaply w/ Barometric Relief[1]
K = Low Leak Econ w/ Barometric Relief[1]
M = Low Leak Econ Reference Enthalpy w/ Barometric Relief[1]
P = Low Leak Econ Comparative Enthalpy w/ Barometric Relief[1]

Digit 15 — Supply Fan/Drive Type/Motor

0 = Standard Motor
1 = Oversized Motor[6]
3 = High Efficiency Motor[6]
6 = Single Zone Variable Air Volume Standard Motor
7 = Multi-Speed Standard Motor
8 = Single Zone Variable Air Volume Oversized Motor
9 = Multi-Speed Oversized Motor
A = Single Zone Variable Air Volume Standard Motor w/ Shaft Grounding Ring
B = Multi-Speed Standard Motor w/ Shaft Grounding Ring
C = Single Zone Variable Air Volume Oversized Motor w/ Shaft Grounding Ring
D = Multi-Speed Oversized Motor w/ Shaft Grounding Ring
E = VAV Supply Air Temperature Control - Standard Motor
F = VAV Supply Air Temperature Control - Oversized Motor
G = VAV Supply Air Temperature Control - Standard Motor w/ Shaft Grounding Ring
H = VAV Supply Air Temperature Control - Oversized Motor w/ Shaft Grounding Ring

Digit 16 — Hinged Service Access / Filters

0 = Standard Panels/Standard Filters[22]
A = Hinged Access/Standard Filters[22]
B = Standard Panels/MERV 8 Filters[6]
C = Hinged Access/MERV 8 Filters[6]
D = Standard Panels/MERV 13 Filters[6]
E = Hinged Access/MERV 13 Filters[6]

Digit 17 — Condenser Coil Protection

0 = Standard Coil
1 = Standard Coil With Hail Guard
4 = CompleteCoat™ Condenser Coil
5 = CompleteCoat™ Condenser Coil with Hail Guard

Digit 18 — Through The Base Provisions

Note: *Applicable to Digit 1, T or Y models.*

0 = No Through The Base Provisions
A = Through The Base Electric[12]

Note: *Applicable to Digit1, Y models only.*

B = Through The Base Gas
C = Through The Base Electric/Gas[12]
D = Through The Base Access

Digit 19 — Disconnect Switch/ Circuit Breaker[11]

0 = No Disconnect/circuit break
1 = Unit Mounted Non-Fused Disconnect Switch
2 = Unit Mounted Circuit Breaker

Digit 20 — Convenience Outlet Option

0 = Without Convenience Outlet
A = Unpowered Convenience Outlet[5]
B = Powered Convenience Outlet[5]

Digit 21 — Communications Options

0 = Without Communications Options
1 = Trane Communications Interface[6, 15]
2 = Lontalk Communications Interface[6]
6 = Building Automation Control Network Communications Interface
7 = Air-Fi™ Wireless Communications[24]

Digit 22 — Refrigeration System Option

0 = Standard refrigeration system
B = Dehumidification (Hot Gas Reheat)[4,13]

Digit 23 — Refrigeration Controls

0 = Without Refrigeration Controls
1 = Frostat[9, 18]

Digit 24 — Smoke Detector[2,10]

0 = Without Smoke Detector
A = Return Air Smoke Detector
B = Supply Air Smoke Detector
C = Return/Supply Air Smoke Detector
D = Plenum Smoke Detector[19]

Digit 25 — System Monitoring Controls

0 = No Monitoring Controls

1 = Clogged Filter Switch[9]
2 = Fan Failure Switch[9]
3 = Discharge Air Sensing[9]
4 = Clogged Filter Switch and Fan Failure switch[9]
5 = Clogged Filter Switch and Discharge Air Sensing[9]
6 = Fan Failure Switch and Discharge Air Sensing[9]
7 = Clogged Filter Switch, Fan Failure Switch and Discharge Air Sensing[9]
A = Condensate Drain Pan Overflow Switch
B = Clogged Filter Switch and Condensate Drain Pan Overflow Switch[9]
C = Fan Failure Switch and Condensate Drain Pan Overflow Switch[9]
D = Discharge Air Sensing and Condensate Drain Pan Overflow Switch[9]
E = Clogged Filter Switch, Fan Failure Switch and Condensate Drain Pan Overflow Switch[9]
F = Clogged Filter Switch, Discharge Air Sensing Tube and Condensate Drain Pan Overflow Switch[9]
G = Fan Failure Switch, Discharge Air Sensing Tube and Condensate Drain Pan Overflow Switch[9]
H = Clogged Filter Switch, Fan Failure Switch, Discharge Air Sensing and Condensate Drain Pan Overflow Switch[9]

Digit 26 - System Monitoring Controls

0 = No Monitoring Controls
A = Demand Control Ventilation (CO_2)[17]
B = FDD (Fault Detection and Diagnostics)
C = FDD (Fault Detection Diagnostics) & Demand Control Ventilation (CO_2)[17]

Digit 27 - Unit Hardware Enhancements

0 = No Enhancements
1 = Stainless Steel Drain Pan

Digit 28 - Short Circuit Current Rating

0 = Standard SCCR
A = 65kA SCCR Option[20, 21]

Digit 31 - Advanced Unit Controls

0 = Standard Unit Controls
1 = Human Interface[23]

Note: *Most Factory Installed Options available for Downflow Air Discharge units only. Please verify with ordering system for availability.*

Model Number Notes

1. Some field set up required.
2. Requires ReliaTel Options Module.
3. Requires Economizer.
4. All 22nd digit model numbers for reheat coil (B) require additional factory installed options: Frostat, and 2" pleated filters.
5. Must be ordered with Through-the-Base Electrical option or Horizontal-Side Access and either Unit Mounted Disconnect or Circuit Breaker.
6. Available factory installed on downflow AND horizontal units. Verify with ordering system.
7. Cannot be fused.
8. Must be factory installed when using Through-the-Base Options.
9. ReliaTel Options Module is required when ordering the following accessories: 4 Stage Cooling, Clogged Filter Switch, Fan Fail Switch, Condensate Overflow Switch, Discharge Air Sensing Kit, Frostat, Ventilation Override, Smoke Detector, Dehumidification and Modulating Gas Heat Furnace.
10. Option cannot be ordered in conjunction with field installed economizer on downflow units. Must be factory installed. The return air smoke detector may not fit up or work properly on the Voyager units when used in conjunction with 3rd party accessories (such as bolt on heat wheels, economizers, and power exhaust). Do not order the return air smoke detectors when using this type of accessory.
11. Unit mounted disconnect and circuit breakers are mutually exclusive of each other.
12. Through-the-base electrical option or Horizontal-Side Access must be ordered with either unit mounted disconnect or circuit breaker. When adding heat, you must order Trane Electric Heat.
13. Available on high efficiency units only.
14. All Factory Installed Options are Built-to-Order. Check order services for estimated production cycle.
15. TCI is for use with non-VariTrac systems and VariTrac systems.
16. For use with multi-speed and SZVAV units only.
17. Demand Control Ventilation Option includes wiring only. The $C0_2$ sensor is a field-installed only option.
18. Frostat is standard on VAV and high efficiency units.
19. Supply and/or return smoke detector may not be used with the plenum smoke detector.
20. Only available where MOP is above 60A.
21. 575 VAC option is 25kA.
22. Standard filters are not available with Low Leak Economizers.
23. Human Interface is standard with FDD (Fault Detection Diagnostics).
24. Must be used with BACnet™ open protocol.

General Data

Table 3. General data—cooling 12½–15 tons standard efficiency

	12½ Tons Downflow & Horizontal Units		15 Tons Downflow & Horizontal Units	
	TS*150G3,4,W,K	YS*150G3,4,W,K	TS*180G3,4,W,K	YS*180G3,4,W,K
Cooling Performance[a]				
Gross Cooling Capacity	150,000	150,000	186,000	186,000
EER (Downflow/Horizontal)[b]	11	11	11	11
Nominal Airflow CFM / ARI Rated CFM	5,000 / 4,000	5,000 / 4,000	6,000 / 5,400	6,000 / 5,400
ARI Net Cooling Capacity	140,000	140,000	176,000	176,000
Integrated Energy Efficiency Ratio (IEER) (One Speed Fan / Multi or Variable Speed Fan)[c]	12.4/13.5	12.2/13.5	12.4/13.2	12.2/13.2
Percent Capacity @ part load (Stage 1/Stage 2)	66/100	66/100	67/100	67/100
System Power (kW)	12.73	12.73	16.00	16.00
Compressor				
Number/Type	2 / Scrolls	2 / Scrolls	2 / Scrolls	2 / Scrolls
Sound				
Outdoor Sound Rating (BELS)[d]	9.2	9.2	9.2	9.2
Outdoor Coil				
Type	Microchannel	Microchannel	Microchannel	Microchannel
Coil Width (in.)	0.71	0.71	0.71	0.71
Face Area (sq. ft.)	25.9	25.9	35.2	35.2
Rows/FPI (DF/HZ)	1/23	1/23	1/23	1/23
Indoor Coil				
Type	Microchannel	Microchannel	Microchannel	Microchannel
Coil Width (in.)	1.00	1.00	0.81	0.81
Face Area (sq. ft.)	17.30	17.30	23.00	23.00
Rows/FPI	2/16	2/16	2/16	2/16
Refrigerant Control	TXV	TXV	TXV	TXV
Drain Connection Number/Size (in.)	1/1.00 NPT	1/1.00 NPT	1/1.00 NPT	1/1.00 NPT
Outdoor Fan				
Type	Propeller	Propeller	Propeller	Propeller
Number Used/Diameter (in.)	2 / 26	2 / 26	2 / 26	2 / 26
Drive Type/No. Speeds	Direct / 1	Direct / 1	Direct / 1	Direct / 1
cfm	11,000	11,000	11,000	11,000
Number Motors/hp	2 / 0.50	2 / 0.50	2 / 0.50	2 / 0.50
Motor rpm	1,100	1,100	1,100	1,100
Indoor Fan				
Type	FC Centrifugal	FC Centrifugal	FC Centrifugal	FC Centrifugal
Number Used/Diameter (in.)	1 / 15x15	1 / 15x15	1 / 18x18	1 / 18x18
Drive Type/No. Speeds	Belt / 1	Belt / 1	Belt / 1	Belt / 1
Number Motors	1	1	1	1
Motor hp (Standard/Oversized)[e]	3.0 / 5.0	3.0 / 5.0	3.0 / 5.0 or 7.5[f]	3.0 / 5.0 or 7.5[f]
Motor rpm (Standard/Oversized)	1,740 / 3,450	1,740 / 3,450	1,740 / 3,450	1,740 / 3,450
Motor Frame Size (Standard/Oversized)	56HZ / 56HZ	56HZ / 56HZ	184TZ / 56HZ/184TZ	56HZ / 56HZ/184TZ

Table 3. General data—cooling 12½–15 tons standard efficiency

	12½ Tons Downflow & Horizontal Units		15 Tons Downflow & Horizontal Units	
	TS*150G3,4,W,K	YS*150G3,4,W,K	TS*180G3,4,W,K	YS*180G3,4,W,K
Filters				
Type Furnished[g]	Throwaway	Throwaway	Throwaway	Throwaway
Number Size Recommended				
Downflow	(2)20x20x2 (4)20x25x2	(2)20x20x2 (4)20x25x2	(4)20x20x2 (4)20x25x2	(4)20x20x2 (4)20x25x2
Horizontal	(2)20x20x2 (4)20x25x2	(2)20x20x2 (4)20x25x2	(8)20x25x2	(8)20x25x2
Refrigerant Charge (Pounds of R-410A)[h]				
Cir#1 / Cir#2 (DF)	8.1/5.1	8.1/5.1	9.0/5.0	9.0/5.0
Cir#1 / Cir#2 (HZ)	8.1/5.2	8.1/5.2	9.2/5.1	9.2/5.1

(a) Cooling Performance is rated at 95°F ambient, 80°F entering dry bulb, 67°F entering wet bulb. Gross capacity does not include the effect of fan motor heat. ARI capacity is net and includes the effect of fan motor heat. Units are suitable for operation to ±20% of nominal cfm. Certified in accordance with the Unitary Large Equipment Certification Program, which is based on ARI Standard 340/360.
(b) EER is rated at ARI conditions and in accordance with ARI Standard 210/240 or 340/360.
(c) Integrated Energy Efficiency Ratio (IEER) is rated in accordance with AHRI standard 210/240 or 340/360.
(d) Outdoor Sound Rating shown is tested in accordance with ARI Standard 270 or 370.
(e) For 380V/60Hz units, the oversized motor (Indoor Fan) is used as the standard motor. Refer to oversized motor data.
(f) Offered only as a field installed accessory.
(g) An optional 2-inch pleated filter is also available.
(h) Refrigerant charge is an approximate value. For a more precise value, see unit nameplate and service instructions.
* Indicates both downflow and horizontal units.

Table 4. General data—heating—12½–15 tons standard efficiency

	12½ Tons Downflow & Horizontal Units			15 Tons Downflow & Horizontal Units		
	Heating Performance[a] (Gas/Electric Only)					
Heating Models	**Low**	**High**	**Modulating Turn Down = 2.5:1**	**Low**	**High**	**Modulating Turn Down = 2.5:1**
Heating Input (Btu/h)	150,000	250,000	350,000	250,000	350,000	350,000
1st Stage (Btu)	100,000	175,000	140,000	175,000	250,000	140,000
Heating Output (Btu/h)	120,000	200,000	280,000	200,000	280,000	280,000
1st Stage (Btu)	80,000	140,000	112,000	140,000	200,000	112,000
Steady State Efficiency%	80	80	80	80	80	80
No. Burners	1	1	1	1	1	1
No. Stages	2	2	N/A	2	2	N/A
Gas Supply Line Pressure (in. wc)	2.5/14.0	2.5/14.0	2.5/14.0	2.5/14.0	2.5/14.0	2.5/14.0
Natural or LP (minimum/maximum)	Natural or LP	Natural or LP	Natural Only	Natural or LP	Natural or LP	Natural Only
Gas Connection Pipe Size (in.)	1/2	1/2	3/4	1/2	3/4	3/4

(a) Heating Performance limit settings and rating data were established and approved under laboratory test conditions using American National Standards Institute standards. Ratings shown are for elevations up to 2000 feet. For elevations above 2000 feet, ratings should be reduced at the rate of 4% for each 1000 feet above sea level.

Table 5. General data—17½–20 tons standard efficiency

	17½ Tons Downflow & Horizontal Units		20 Tons Downflow & Horizontal Units	
	TS*210G3,4,W,K	YS*210G3,4,W,K	TS*240G3,4,W,K	YS*240G3,4,W,K
Cooling Performance[a]				
Gross Cooling Capacity	210,000	210,000	259,000	259,000
EER (Downflow/Horizontal)[b]	11	11	10	10
Nominal Airflow CFM / ARI Rated CFM	7,000 / 6,125	7,000 / 6,125	8,000 / 6,400	8,000 / 6,400
ARI Net Cooling Capacity	196,000	196,000	240,000	240,000
Integrated Energy Efficiency Ratio (IEER) (One Speed Fan / Multi or Variable Speed Fan)[c]	12.4/13.2	12.2/13.2	11.6/12.4	11.4/12.4
Percent Capacity @ part load (Stage 1/Stage 2)	67/100	67/100	67/100	67/100
System Power (kW)	17.82	17.82	24.00	24.00
Compressor				
Number/Type	2 / Scrolls	2 / Scrolls	2 / Scrolls	2 / Scrolls
Sound				
Outdoor Sound Rating (BELS)[d]	9.4	9.4	9.4	9.4
Outdoor Coil				
Type	Microchannel	Microchannel	Microchannel	Microchannel
Coil Width (in.)	1.00	1.00	1.0	1.0
Face Area (sq. ft.)	35.2	35.2	35.2	35.2
Rows/FPI (DF/HZ)	1/20	1/20	1/23 / 1/20	1/23 / 1/20
Indoor Coil				
Type	Microchannel	Microchannel	Microchannel	Microchannel
Tube Size (in.) ID	1.00	1.00	1.00	1.00
Face Area (sq. ft.)	23.00	23.00	23.00	23.00
Rows/FPI	2 / 16	2 / 16	2 / 16	2 / 16
Refrigerant Control	TXV	TXV	TXV	TXV
Drain Connection Number/Size (in.)	1/1.00 NPT	1/1.00 NPT	1/1.00 NPT	1/1.00 NPT
Outdoor Fan				
Type	Propeller	Propeller	Propeller	Propeller
Number Used/Diameter (in.)	2 / 26	2 / 26	2 / 26	2 / 26
Drive Type/No. Speeds	Direct / 1	Direct / 1	Direct / 1	Direct / 1
cfm	14,500	14,500	15,500	15,500
Number Motors/hp	2 / 1.0	2 / 1.0	2 / 1.0	2 / 1.0
Motor rpm	1125	1125	1125	1125
Indoor Fan				
Type	FC Centrifugal	FC Centrifugal	FC Centrifugal	FC Centrifugal
Number Used/Diameter (in.)	1 / 18x18	1 / 18x18	1 / 18x18	1 / 18x18
Drive Type/No. Speeds	Belt / 1	Belt / 1	Belt / 1	Belt / 1
Number Motors	1	1	1	1
Motor hp (Standard/Oversized)[e]	5.0 / 7.5	5.0 / 7.5	5.0 / 7.5	5.0 / 7.5
Motor rpm (Standard/Oversized)	3,450 / 3,470	3,450 / 3,470	3,450 / 3,470	3,450 / 3,470
Motor Frame Size (Standard/Oversized)	56HZ / 184T	56HZ / 184T	56HZ / 184T	56HZ / 184T

Table 5. General data—17½–20 tons standard efficiency

	17½ Tons Downflow & Horizontal Units		20 Tons Downflow & Horizontal Units	
	TS*210G3,4,W,K	YS*210G3,4,W,K	TS*240G3,4,W,K	YS*240G3,4,W,K
Filters				
Type Furnished[f]	Throwaway	Throwaway	Throwaway	Throwaway
Number Size Recommended				
Downflow	(4)20x20x2 (4)20x25x2	(4)20x20x2 (4)20x25x2	(4)20x20x2 (4)20x25x2	(4)20x20x2 (4)20x25x2
Horizontal	(8)20x25x2	(8)20x25x2	(8)20x25x2	(8)20x25x2
Refrigerant Charge (Pounds of R-410A)				
Cir#1/Cir#2 (DF)	12.6/6.8	12.6/6.8	12.4/7.2	12.4/7.2
Cir#1/Cir#2 (HZ)	12.0/6.8	12.0/6.8	11.7/6.8	11.7/6.8

(a) Cooling Performance is rated at 95°F ambient, 80°F entering dry bulb, 67°F entering wet bulb. Gross capacity does not include the effect of fan motor heat. ARI capacity is net and includes the effect of fan motor heat. Units are suitable for operation to ±20% of nominal cfm. Certified in accordance with the Unitary Large Equipment Certification Program, which is based on ARI Standard 340/360.
(b) EER is rated at ARI conditions and in accordance with ARI Standard 210/240 or 340/360.
(c) Integrated Energy Efficiency Ratio (IEER) is rated in accordance with AHRI standard 210/240 or 340/360.
(d) Outdoor Sound Rating shown is tested in accordance with ARI Standard 270 or 370.
(e) For 380V/60Hz units, the oversized motor (Indoor Fan) is used as the standard motor. Refer to oversized motor data.
(f) Refrigerant charge is an approximate value. For a more precise value, see unit nameplate and service instructions.
* Indicates both downflow and horizontal units.

Table 6. General data—17½ standard efficiency

	17½ Tons Downflow & Horizontal Units	
	TS*211G3,4,W	YS*211G3,4,W
Cooling Performance[a]		
Gross Cooling Capacity	210,000	210,000
EER (Downflow/Horizontal)[b]	11	11
Nominal Airflow CFM / ARI Rated CFM	7,000 / 6,125	7,000 / 6,125
ARI Net Cooling Capacity	196,000	196,000
Integrated Energy Efficiency Ratio (IEER) (One Speed Fan / Multi or Variable Speed Fan)[c]	11.8/12.9	11.8/12.9
Percent Capacity @ part load (Stage 1/Stage 2)	73/100	73/100
System Power (kW)	17.82	17.82
Compressor		
Number/Type	2 / Scrolls	2 / Scrolls
Sound		
Outdoor Sound Rating (BELS)[d]	9.4	9.4
Outdoor Coil		
Type	Microchannel	Microchannel
Coil Width (in.)	1.00	1.00
Face Area (sq. ft.)	35.2	35.2
Rows/FPI (DF/HZ)	1/20	1/20
Indoor Coil		
Type	Microchannel	Microchannel
Tube Size (in.) ID	1.00	1.00
Face Area (sq. ft.)	23.00	23.00
Rows/FPI	2 / 16	2 / 16
Refrigerant Control	TXV	TXV
Drain Connection Number/Size (in.)	1/1.00 NPT	1/1.00 NPT

Table 6. General data—17½ standard efficiency

	17½ Tons Downflow & Horizontal Units	
	TS*211G3,4,W	**YS*211G3,4,W**
Outdoor Fan		
Type	Propeller	Propeller
Number Used/Diameter (in.)	2 / 26	2 / 26
Drive Type/No. Speeds	Direct / 1	Direct / 1
cfm	14,500	14,500
Number Motors/hp	2 / 1.0	2 / 1.0
Motor rpm	1125	1125
Indoor Fan		
Type	FC Centrifugal	FC Centrifugal
Number Used/Diameter (in.)	1 / 18x18	1 / 18x18
Drive Type/No. Speeds	Belt / 1	Belt / 1
Number Motors	1	1
Motor hp (Standard/Oversized)[e]	5.0 / 7.5	5.0 / 7.5
Motor rpm (Standard/Oversized)	3,450 / 3,470	3,450 / 3,470
Motor Frame Size (Standard/Oversized)	145T / 184T	145T / 184T
Filters		
Type Furnished[f]	Throwaway	Throwaway
Number Size Recommended		
Downflow	(4)20x20x2 (4)20x25x2	(4)20x20x2 (4)20x25x2
Horizontal	(8)20x25x2	(8)20x25x2
Refrigerant Charge (Pounds of R-410A)		
Cir#1/Cir#2 (DF)	14.4/7.4	14.4/7.4
Cir#1/Cir#2 (HZ)	14.4/7.4	14.4/7.4

(a) Cooling Performance is rated at 95°F ambient, 80°F entering dry bulb, 67°F entering wet bulb. Gross capacity does not include the effect of fan motor heat. ARI capacity is net and includes the effect of fan motor heat. Units are suitable for operation to ±20% of nominal cfm. Certified in accordance with the Unitary Large Equipment Certification Program, which is based on ARI Standard 340/360.
(b) EER is rated at ARI conditions and in accordance with ARI Standard 210/240 or 340/360.
(c) Integrated Energy Efficiency Ratio (IEER) is rated in accordance with AHRI standard 210/240 or 340/360.
(d) Outdoor Sound Rating shown is tested in accordance with ARI Standard 270 or 370.
(e) For 380V/60Hz units, the oversized motor (Indoor Fan) is used as the standard motor. Refer to oversized motor data.
(f) Refrigerant charge is an approximate value. For a more precise value, see unit nameplate and service instructions.
* Indicates both downflow and horizontal units.

Table 7. General data—heating—17½–20 tons standard efficiency

	17½ Tons Downflow & Horizontal Units			20 Tons Downflow & Horizontal Units		
	Heating Performance[a] (Gas/Electric Only)					
Heating Models	**Low**	**High**	**Modulating Turn Down = 2.5:1**	**Low**	**High**	**Modulating Turn Down = 2.5:1**
Heating Input (Btu/h)	250,000	350,000	350,000	250,000	400,000	350,000
1st Stage (Btu)	175,000	250,000	140,000	175,000	300,000	140,000
Heating Output (Btu/h)	200,000	280,000	280,000	200,000	320,000	280,000
1st Stage (Btu)	140,000	200,000	112,000	140,000	240,000	112,000
Steady State Efficiency%	80	80	80	80	80	80
No. Burners	1	1	1	1	1	1
No. Stages	2	2	N/A	2	2	N/A
Gas Supply Line Pressure (in. wc)	2.5/14.0	2.5/14.0	2.5/14.0	2.5/14.0	2.5/14.0	2.5/14.0
Natural or LP (minimum/maximum)	Natural or LP	Natural or LP	Natural Only	Natural or LP	Natural or LP	Natural Only
Gas Connection Pipe Size (in.)	1/2	3/4	3/4	1/2	3/4	3/4

(a) Heating Performance limit settings and rating data were established and approved under laboratory test conditions using American National Standards Institute standards. Ratings shown are for elevations up to 2000 feet. For elevations above 2000 feet, ratings should be reduced at the rate of 4% for each 1000 feet above sea level.

Table 8. General data—25 ton standard efficiency

	25 Tons Downflow & Horizontal Units	
	TS*300G3,4,W,K	YS*300G3,4,W,K
Cooling Performance[a]		
Gross Cooling Capacity	296,400	296,400
EER (Downflow/Horizontal)[b]	10	10
Nominal Airflow CFM / ARI Rated CFM	10,000 / 7,750	10,000 / 7,750
ARI Net Cooling Capacity	270,000	270,000
Integrated Energy Efficiency Ratio (IEER) (One Speed Fan / Multi or Variable Speed Fan)[c]	11.6/12.4	11.4/12.4
Percent Capacity @ part load (Stage 1/Stage 2)	66/100	66/100
System Power (kW)	27	27
Compressor		
Number/Type	2 / Scrolls	2 / Scrolls
Sound		
Outdoor Sound Rating (BELS)[d]	9.4	9.4
Outdoor Coil		
Type	Microchannel	Microchannel
Coil Width (in.)	1.0	1.0
Face Area (sq. ft.)	35.2	35.2
Rows/FPI (DF/HZ)	1/23 / 1/20	1/23 / 1/20
Indoor Coil		
Type	Microchannel	Microchannel
Tube Size (in.) ID	1.00	1.00
Face Area (sq. ft.)	23.00	23.00
Rows/FPI	2 / 16	2 / 16
Refrigerant Control	TXV	TXV
Drain Connection Number/Size (in.)	1/1.00 NPT	1/1.00 NPT
Outdoor Fan		
Type	Propeller	Propeller
Number Used/Diameter (in.)	2 / 28	2 / 28
Drive Type/No. Speeds	Direct / 1	Direct / 1
cfm	16,100	16,100
Number Motors/hp	2 / 1.0	2 / 1.0
Motor rpm	1125	1125
Indoor Fan		
Type	FC Centrifugal	FC Centrifugal
Number Used/Diameter (in.)	1 / 18x18	1 / 18x18
Drive Type/No. Speeds	Belt / 1	Belt / 1
Number Motors	1	1
Motor hp (Standard/Oversized)	7.5 / N/A	7.5 / N/A
Motor rpm (Standard/Oversized)	3,470 / N/A	3,470 / N/A
Motor Frame Size (Standard/Oversized)	184T / N/A	184T / N/A

Table 8. General data—25 ton standard efficiency

	25 Tons Downflow & Horizontal Units	
	TS*300G3,4,W,K	YS*300G3,4,W,K
Filters		
Type Furnished[e]	Throwaway	Throwaway
Number Size Recommended		
Downflow	(4)20x20x2 (4)20x25x2	(4)20x20x2 (4)20x25x2
Horizontal	(8)20x25x2	(8)20x25x2
Refrigerant Charge (Pounds of R-410A)[f]		
Cir#1/Cir#2 (DF)	12.5/6.7	12.5/6.7
Cir#1/Cir#2 (HZ)	11.7/6.7	11.7/6.7

(a) Cooling Performance is rated at 95°F ambient, 80°F entering dry bulb, 67°F entering wet bulb. Gross capacity does not include the effect of fan motor heat. ARI capacity is net and includes the effect of fan motor heat. Units are suitable for operation to ±20% of nominal cfm. Certified in accordance with the Unitary Large Equipment Certification Program, which is based on ARI Standard 340/360.
(b) EER is rated at ARI conditions and in accordance with ARI Standard 210/240 or 340/360.
(c) Integrated Energy Efficiency Ratio (IEER) is rated in accordance with AHRI standard 210/240 or 340/360.
(d) Outdoor Sound Rating shown is tested in accordance with ARI Standard 270 or 370.
(e) An optional 2-inch pleated filter is also available.
(f) Refrigerant charge is an approximate value. For a more precise value, see unit nameplate and service instructions.
* Indicates both downflow and horizontal units.

Table 9. General data—25 tons standard efficiency

	25 Tons Downflow & Horizontal Units	
	TS*301G3,4,W	YS*301G3,4,W
Cooling Performance[a]		
Gross Cooling Capacity	296,400	296,400
EER (Downflow/Horizontal)[b]	10	10
Nominal Airflow CFM / ARI Rated CFM	10,000 / 8,000	10,000 / 8,000
ARI Net Cooling Capacity	272,000	272,000
Integrated Energy Efficiency Ratio (IEER) (One Speed Fan / Multi or Variable Speed Fan)[c]	10.4/12.0	10.4/12.0
Percent Capacity @ part load (Stage 1/Stage 2)	50/100	50/100
System Power (kW)	27.20	27.20
Compressor		
Number/Type	2 / Scrolls	2 / Scrolls
Sound		
Outdoor Sound Rating (BELS)[d]	9.4	9.4
Outdoor Coil		
Type	Microchannel	Microchannel
Coil Width (in.)	1.0	1.0
Face Area (sq. ft.)	35.2	35.2
Rows/FPI (DF/HZ)	1/23 / 1/20	1/23 / 1/20
Indoor Coil		
Type	Microchannel	Microchannel
Tube Size (in.) ID	1.00	1.00
Face Area (sq. ft.)	23.00	23.00
Rows/FPI	2 / 16	2 / 16
Refrigerant Control	TXV	TXV
Drain Connection Number/Size (in.)	1/1.00 NPT	1/1.00 NPT

Table 9. General data—25 tons standard efficiency

	25 Tons Downflow & Horizontal Units	
	TS*301G3,4,W	YS*301G3,4,W
Outdoor Fan		
Type	Propeller	Propeller
Number Used/Diameter (in.)	2 / 28	2 / 28
Drive Type/No. Speeds	Direct / 1	Direct / 1
cfm	16,100	16,100
Number Motors/hp	2 / 1.0	2 / 1.0
Motor rpm	1125	1125
Indoor Fan		
Type	FC Centrifugal	FC Centrifugal
Number Used/Diameter (in.)	1 / 18x18	1 / 18x18
Drive Type/No. Speeds	Belt / 1	Belt / 1
Number Motors	1	1
Motor hp (Standard/Oversized)	7.5 / N/A	7.5 / N/A
Motor rpm (Standard/Oversized)	3,470 / N/A	3,470 / N/A
Motor Frame Size (Standard/Oversized)	184T / N/A	184T / N/A
Filters		
Type Furnished[e]	Throwaway	Throwaway
Number Size Recommended		
Downflow	(4)20x20x2 (4)20x25x2	(4)20x20x2 (4)20x25x2
Horizontal	(8)20x25x2	(8)20x25x2
Refrigerant Charge (Pounds of R-410A)[f]		
Cir#1/Cir#2 (DF)	10.5	10.5
Cir#1/Cir#2 (HZ)	10.5	10.5

(a) Cooling Performance is rated at 95°F ambient, 80°F entering dry bulb, 67°F entering wet bulb. Gross capacity does not include the effect of fan motor heat. ARI capacity is net and includes the effect of fan motor heat. Units are suitable for operation to ±20% of nominal cfm. Certified in accordance with the Unitary Large Equipment Certification Program, which is based on ARI Standard 340/360.
(b) EER is rated at ARI conditions and in accordance with ARI Standard 210/240 or 340/360.
(c) Integrated Energy Efficiency Ratio (IEER) is rated in accordance with AHRI standard 210/240 or 340/360.
(d) Outdoor Sound Rating shown is tested in accordance with ARI Standard 270 or 370.
(e) An optional 2-inch pleated filter is also available.
(f) Refrigerant charge is an approximate value. For a more precise value, see unit nameplate and service instructions.
* Indicates both downflow and horizontal units.

Table 10. General data—heating—25 tons

	25 Tons Downflow & Horizontal Units		
	Heating Performance[a] (Gas/Electric Only)		
Heating Models	**Low**	**High**	**Modulating Turn Down = 2.5:1**
Heating Input (Btu/h)	250,000	400,000	350,000
1st Stage (Btu)	175,000	300,000	140,000
Heating Output (Btu/h)	200,000	320,000	280,000
1st Stage (Btu)	140,000	240,000	112,000
Steady State Efficiency%	80	80	80
No. Burners	1	1	1
No. Stages	2	2	N/A
Gas Supply Line Pressure (in. wc)	2.5 / 14.0	2.5 / 14.0	2.5 / 14.0
Natural or LP (minimum/maximum)	Natural or LP	Natural or LP	Natural Only
Gas Connection Pipe Size (in.)	½	¾	¾

(a) Heating Performance limit settings and rating data were established and approved under laboratory test conditions using American National Standards Institute standards. Ratings shown are for elevations up to 2000 feet. For elevations above 2000 feet, ratings should be reduced at the rate of 4% for each 1000 feet above sea level.

Table 11. General data—12½–15 ton high efficiency

	12½ Tons Downflow & Horizontal Units		15 Tons Downflow & Horizontal Units	
	TH*150G3,4,W	YH*150G3,4,W	TH*180G3,4,W	YH*180G3,4,W
Cooling Performance[a]				
Gross Cooling Capacity	152,400	152,400	180,500	180,500
EER[b]	12.1	12.1	12.1	12.1
Nominal CFM / ARI Rated CFM	5,000 / 4,000	5,000 / 4,000	6,000 / 5,250	6,000 / 5,250
ARI Net Cooling Capacity	144,000	144,000	174,000	174,000
Integrated Energy Efficiency Ratio (IEER) (One Speed Fan / Multi or Variable Speed Fan)[c]	13.5/15.0	13.5/15.0	14.0/15.0	14.0/15.0
Percent Capacity @ part load (Stage 1/Stage 2/Stage 3)[d]	30/70/100	30/70/100	32/68/100	32/68/100
System Power (kW)	11.90	11.90	14.38	14.38
Compressor				
Number/Type	2 / Scrolls	2 / Scrolls	2 / Scrolls	2 / Scrolls
Sound				
Outdoor Sound Rating (BELS)[e]	9.2	9.2	9.2	9.2
Outdoor Coil				
Type	Microchannel	Microchannel	Microchannel	Microchannel
Coil Width (in.)	1.0	1.0	1.0	1.0
Face Area (sq. ft.)	35.2	35.2	42.6	42.6
Rows/FPI	1 / 20	1 / 20	1 / 20	1 / 20
Indoor Coil				
Type	Hi-Performance	Hi-Performance	Hi-Performance	Hi-Performance
Tube Size (in.) ID	0.3125	0.3125	0.3125	0.3125
Face Area (sq. ft.)	26.00	26.00	31.42	31.42
Rows/FPI	4 / 15	4 / 15	4 / 15	4 / 15
Refrigerant Control	TXV	TXV	TXV	TXV
Drain Connection Number/Size (in.)	1/1.00 NPT	1/1.00 NPT	1/1.00 NPT	1/1.00 NPT
Outdoor Fan				
Type	Propeller	Propeller	Propeller	Propeller
Number Used/Diameter (in.)	2 / 26	2 / 26	2 / 26	2 / 26
Drive Type/No. Speeds	Direct / 1	Direct / 1	Direct / 1	Direct / 1
cfm	11,400	11,400	11,700	11,700
Number Motors/hp	2 / 0.50	2 / 0.50	2 / 0.50	2 / 0.50
Motor rpm	1,100	1,100	1,100	1,100
Indoor Fan				
Type	FC Centrifugal	FC Centrifugal	FC Centrifugal	FC Centrifugal
Number Used/Diameter (in.)	1 / 18x18	1 / 18x18	1 / 18x18	1 / 18x18
Drive Type/No. Speeds	Belt / 1	Belt / 1	Belt / 1	Belt / 1
Number Motors	1	1	1	1
Motor hp (Standard/Oversized)	3.0 / 5.0	3.0 / 5.0	3.0 / 5.0	3.0 / 5.0
Motor rpm (Standard/Oversized)	1,740 / 3,450	1,740 / 3,450	1,740 / 3,450	1,740 / 3,450
Motor Frame Size (Standard/Oversized)	145T / 145T	145T / 145T	145T / 145T	145T / 145T

Table 11. General data—12½–15 ton high efficiency

	12½ Tons Downflow & Horizontal Units		15 Tons Downflow & Horizontal Units	
	TH*150G3,4,W	YH*150G3,4,W	TH*180G3,4,W	YH*180G3,4,W
Filters				
Type Furnished[f]	Throwaway	Throwaway	Throwaway	Throwaway
Number Size Recommended				
Downflow	(4)20x20x2 (4)20x25x2	(4)20x20x2 (4)20x25x2	(8)20x20x2 (4)20x16x2	(8)20x20x2 (4)20x16x2
Horizontal	(8)20x25x2	(8)20x25x2	(12)20x20x2	(12)20x20x2
Refrigerant Charge (Pounds of R-410A) [g]				
Downflow & Horizontal (Cir#1/Cir#2)	12.5/7.1	12.5/7.1	13.0/8.5	13.0/8.5
Optional Hot Gas Reheat Coil (Cir#1/Cir#2)	9.2 / 6.9	9.2 / 6.9	10.9 / 8.9	10.9 / 8.9

(a) Cooling Performance is rated at 95°F ambient, 80°F entering dry bulb, 67°F entering wet bulb. Gross capacity does not include the effect of fan motor heat. ARI capacity is net and includes the effect of fan motor heat. Units are suitable for operation to ±20% of nominal cfm. Certified in accordance with the Unitary Large Equipment Certification Program, which is based on ARI Standard 340/360.
(b) EER is rated at ARI conditions and in accordance with ARI Standard 210/240 or 340/360.
(c) Integrated Energy Efficiency Ratio (IEER) is rated in accordance with AHRI standard 210/240 or 340/360.
(d) 3 stages not available with Reheat models.
(e) Outdoor Sound Rating shown is tested in accordance with ARI Standard 270 or 370.
(f) An optional 2 inch pleated filter is also available.
(g) Refrigerant charge is an approximate value. For a more precise value, see unit nameplate and service instructions.
* Indicates both downflow and horizontal units.

Table 12. General data—heating—12½-15 ton high efficiency

	12½ Tons Downflow & Horizontal Units			15 Tons Downflow & Horizontal Units		
	Heating Performance[a] (Gas/Electric Only)					
Heating Models	**Low**	**High**	**Modulating Turn Down = 2.5:1**	**Low**	**High**	**Modulating Turn Down = 2.5:1**
Heating Input (Btu/h)	150,000	250,000	350,000	250,000	350,000	350,000
1st Stage (Btu)	100,000	175,000	140,000	175,000	250,000	140,000
Heating Output (Btu/h)	120,000	200,000	280,000	200,000	280,000	280,000
1st Stage (Btu)	80,000	140,000	112,000	140,000	200,000	112,000
Steady State Efficiency%	80	80	80	80	80	80
No. Burners	1	1	1	1	1	1
No. Stages	2	2	N/A	2	2	N/A
Gas Supply Line Pressure (in. wc)	2.5 / 14.0	2.5 / 14.0	2.5 / 14.0	2.5 / 14.0	2.5 / 14.0	2.5 / 14.0
Natural or LP (minimum/maximum)			Natural Only			Natural Only
Gas Connection Pipe Size (in.)	½	½	¾	½	¾	¾

(a) Heating Performance limit settings and rating data were established and approved under laboratory test conditions using American National Standards Institute standards. Ratings shown are for elevations up to 2000 feet. For elevations above 2000 feet, ratings should be reduced at the rate of 4% for each 1000 feet above sea level.

Table 13. General data—17½–20 ton high efficiency

	17½ Tons Downflow & Horizontal Units		20 Tons Downflow & Horizontal Units	
	TH*210G3,4,W	YH*210G3,4,W	TH*240G3,4,W	YH*240G3,4,W
Cooling Performance[a]				
Gross Cooling Capacity	214,800	214,800	248,500	248,500
EER[b]	11.8	11.8	11.0	11.0
Nominal CFM / ARI Rated CFM	7,000 / 5,600	7,000 / 5,600	8,000 / 6,400	8,000 / 6,400
ARI Net Cooling Capacity	204,000	204,000	234,000	234,000
Integrated Energy Efficiency Ratio (IEER) (One Speed Fan / Multi or Variable Speed Fan)[c]	13.0/14.0	13.0/14.0	12.4/14.0	12.4/14.0
Percent Capacity @ part load (Stage 1/Stage 2/Stage 3)[d]	31/69/100	31/69/100	30/70/100	30/70/100
System Power (kW)	17.29	17.29	21.27	21.27
Compressor				
Number/Type	2 / Scrolls	2 / Scrolls	2 / Scrolls	2 / Scrolls
Sound				
Outdoor Sound Rating (BELS)[e]	9.2	9.2	9.4	9.4
Outdoor Coil				
Type	Microchannel	Microchannel	Microchannel	Microchannel
Coil Width (in.)	1.0	1.0	1.0	1.0
Face Area (sq. ft.)	42.6	42.6	42.6	42.6
Rows/FPI	1 / 20	1 / 20	1 / 20	1 / 20
Indoor Coil				
Type	Hi-Performance	Hi-Performance	Hi-Performance	Hi-Performance
Tube Size (in.) ID	0.3125	0.3125	0.3125	0.3125
Face Area (sq. ft.)	31.42	31.42	31.42	31.42
Rows/FPI	4 / 15	4 / 15	4 / 15	4 / 15
Refrigerant Control	TXV	TXV	TXV	TXV
Drain Connection Number/Size (in.)	1/1.00 NPT	1/1.00 NPT	1/1.00 NPT	1/1.00 NPT
Outdoor Fan				
Type	Propeller	Propeller	Propeller	Propeller
Number Used/Diameter (in.)	2 / 26	2 / 26	2 / 28	2 / 28
Drive Type/No. Speeds	Direct / 1	Direct / 1	Direct / 1	Direct / 1
cfm	15,800	15,800	16,500	16,500
Number Motors/hp	2 / 1.0	2 / 1.0	2 / 1.0	2 / 1.0
Motor rpm	1,125	1,125	1,125	1,125
Indoor Fan				
Type	FC Centrifugal	FC Centrifugal	FC Centrifugal	FC Centrifugal
Number Used/Diameter (in.)	1 / 18x18	1 / 18x18	1 / 18x18	1 / 18x18
Drive Type/No. Speeds	Belt / 1	Belt / 1	Belt / 1	Belt / 1
Number Motors	1	1	1	1
Motor hp (Standard/Oversized)	5.0 / 7.5	5.0 / 7.5	5.0 / 7.5	5.0 / 7.5
Motor rpm (Standard/Oversized)	3,450 / 3,470	3,450 / 3,470	3,450 / 3,470	3,450 / 3,470
Motor Frame Size (Standard/Oversized)	145T / 184T	145T / 184T	145T / 184T	145T / 184T

Table 13. General data—17½–20 ton high efficiency

	17½ Tons Downflow & Horizontal Units		20 Tons Downflow & Horizontal Units	
	TH*210G3,4,W	YH*210G3,4,W	TH*240G3,4,W	YH*240G3,4,W
Filters				
Type Furnished[f]	Throwaway	Throwaway	Throwaway	Throwaway
Number Size Recommended				
Downflow	(8)20x20x2 (4)20x16x2	(8)20x20x2 (4)20x16x2	(8)20x20x2 (4)20x16x2	(8)20x20x2 (4)20x16x2
Horizontal	(12)20x20x2	(12)20x20x2	(12)20x20x2	(12)20x20x2
Refrigerant Charge (Pounds of R-410A)[g]				
Downflow & Horizontal (Cir#1/Cir#2)	14.0 / 7.3	14.0 / 7.3	15.5 / 7.5	15.5 / 7.5
Optional Hot Gas Reheat Coil (Cir#1/Cir#2)	12.2/8.9	12.2/8.9	11.9 / 9.6	11.9 / 9.6

(a) Cooling Performance is rated at 95°F ambient, 80°F entering dry bulb, 67°F entering wet bulb. Gross capacity does not include the effect of fan motor heat. ARI capacity is net and includes the effect of fan motor heat. Units are suitable for operation to ±20% of nominal cfm. Certified in accordance with the Unitary Large Equipment Certification Program, which is based on ARI Standard 340/360.
(b) EER is rated at ARI conditions and in accordance with ARI Standard 210/240 or 340/360.
(c) Integrated Energy Efficiency Ratio (IEER) is rated in accordance with AHRI standard 210/240 or 340/360.
(d) 3 stages not available with Reheat models.
(e) Outdoor Sound Rating shown is tested in accordance with ARI Standard 270 or 370.
(f) An optional 2 inch pleated filter is also available.
(g) Refrigerant charge is an approximate value. For a more precise value, see unit nameplate and service instructions.
* Indicates both downflow and horizontal units.

Table 14. General data—heating—17½–20 ton high efficiency

	17½ Tons Downflow & Horizontal Units			20 Tons Downflow & Horizontal Units		
	Heating Performance[a] (Gas/Electric Only)					
Heating Models	**Low**	**High**	**Modulating Turn Down = 2.5:1**	**Low**	**High**	**Modulating Turn Down = 2.5:1**
Heating Input (Btu/h)	250,000	350,000	350,000	250,000	400,000	350,000
1st Stage (Btu)	175,000	250,000	140,000	175,000	300,000	140,000
Heating Output (Btu/h)	200,000	280,000	280,000	200,000	320,000	280,000
1st Stage (Btu)	140,000	200,000	112,000	140,000	240,000	112,000
Steady State Efficiency%	80	80	80	80	80	80
No. Burners	1	1	1	1	1	1
No. Stages	2	2	N/A	2	2	N/A
Gas Supply Line Pressure (in. wc)	2.5 / 14.0	2.5 / 14.0	2.5/14.0	2.5 / 14.0	2.5 / 14.0	2.5/14.0
Natural or LP (minimum/maximum)			Natural Only			Natural Only
Gas Connection Pipe Size (in.)	½	¾	¾	½	¾	¾

(a) Heating Performance limit settings and rating data were established and approved under laboratory test conditions using American National Standards Institute standards. Ratings shown are for elevations up to 2000 feet. For elevations above 2000 feet, ratings should be reduced at the rate of 4% for each 1000 feet above sea level.

Table 15. General data—25 ton high efficiency

	25 Tons Downflow & Horizontal Units	
	TH*300G3,4,W	**YH*300G3,4,W**
Cooling Performance[a]		
Gross Cooling Capacity	292,300	292,300
EER[b]	10.6	10.6
Nominal CFM / ARI Rated CFM	10,000 / 8,000	10,000 / 8,000
ARI Net Cooling Capacity	274,000	274,000
Integrated Energy Efficiency Ratio (IEER) (One Speed Fan / Multi or Variable Speed Fan)[c]	12.4/15.0	12.4/15.0
Percent Capacity @ part load (Stage 1/Stage 2/Stage 3/Stage 4)[d]	25/50/75/100	25/50/75/100
System Power (kW)	25.85	25.85
Compressor		
Number/Type	3 / Scrolls	3 / Scrolls
Sound		
Outdoor Sound Rating (BELS)[e]	9.4	9.4
Outdoor Coil		
Type	Microchannel	Microchannel
Coil Width (in.)	1.0	1.0
Face Area (sq. ft.)	42.58	42.58
Rows/FPI	1 / 20	1 / 20
Indoor Coil		
Type	Hi-Performance	Hi-Performance
Tube Size (in.) ID	0.3125	0.3125
Face Area (sq. ft.)	31.42	31.42
Rows/FPI	4 / 15	4 / 15
Refrigerant Control	TXV	TXV
Drain Connection Number/Size (in.)	1/1.00 NPT	1/1.00 NPT
Outdoor Fan		
Type	Propeller	Propeller
Number Used/Diameter (in.)	2 / 28	2 / 28
Drive Type/No. Speeds	Direct / 1	Direct / 1
cfm	16,500	16,500
Number Motors/hp	2 / 1.0	2 / 1.0
Motor rpm	1,125	1,125
Indoor Fan		
Type	FC Centrifugal	FC Centrifugal
Number Used/Diameter (in.)	1 / 18x18	1 / 18x18
Drive Type/No. Speeds	Belt / 1	Belt / 1
Number Motors	1	1
Motor hp (Standard)	7.5	7.5
Motor rpm (Standard)	3,470	3,470
Motor Frame Size (Standard)	184T	184T

Table 15. General data—25 ton high efficiency

	25 Tons Downflow & Horizontal Units	
	TH*300G3,4,W	YH*300G3,4,W
Filters		
Type Furnished[f]	Throwaway	Throwaway
Number Size Recommended		
Downflow	(8)20x20x2 (4)20x16x2	(8)20x20x2 (4)20x16x2
Horizontal	(12)20x20x2	(12)20x20x2
Refrigerant Charge (Pounds of R-410A)[g]		
Downflow & Horizontal (Cir#1/Cir#2)	11.8 / 10.6	11.8 / 10.6
Optional Hot Gas Reheat Coil (Cir#1/Cir#2)	13.2 / 11.4	13.2 / 11.4

(a) Cooling Performance is rated at 95°F ambient, 80°F entering dry bulb, 67°F entering wet bulb. Gross capacity does not include the effect of fan motor heat. ARI capacity is net and includes the effect of fan motor heat. Units are suitable for operation to ±20% of nominal cfm. Certified in accordance with the Unitary Large Equipment Certification Program, which is based on ARI Standard 340/360.
(b) EER is rated at ARI conditions and in accordance with ARI Standard 210/240 or 340/360.
(c) Integrated Energy Efficiency Ratio (IEER) is rated in accordance with AHRI standard 210/240 or 340/360.
(d) 3 and 4 stages not available with Reheat models.
(e) Outdoor Sound Rating shown is tested in accordance with ARI Standard 270 or 370.
(f) An optional 2-inch pleated filter is also available.
(g) Refrigerant charge is an approximate value. For a more precise value, see unit nameplate and service instructions.
* Indicates both downflow and horizontal units.

Table 16. General data—heating—25 ton high efficiency

	25 Tons Downflow & Horizontal Units		
	Heating Performance[a] (Gas/Electric Only)		
Heating Models	**Low**	**High**	**Modulating Turn Down = 2.5:1**
Heating Input (Btu/h)	250,000	400,000	350,000
1st Stage (Btu)	175,000	300,000	140,000
Heating Output (Btu/h)	200,000	320,000	280,000
1st Stage (Btu)	140,000	240,000	112,000
Steady State Efficiency%	80	80	80
No. Burners	1	1	1
No. Stages	2	2	N/A
Gas Supply Line Pressure (in. wc)	2.5 / 14.0	2.5 / 14.0	2.5/14.0
Natural or LP (minimum/maximum)			Natural Only
Gas Connection Pipe Size (in.)	½	¾	¾

(a) Heating Performance limit settings and rating data were established and approved under laboratory test conditions using American National Standards Institute standards. Ratings shown are for elevations up to 2000 feet. For elevations above 2000 feet, ratings should be reduced at the rate of 4% for each 1000 feet above sea level.

Performance Data

Table 17. Gross cooling capacities 12½ tons three phase standard efficiency T/YS*150G3,4,W,K

Air Flow cfm	Ent DB (°F)	Ambient Temperature																	
		85						95						105					
		Entering Wet Bulb																	
		61		67		73		61		67		73		61		67		73	
		MBh	SHC	MBh	SHC	MBh	SHC	MBh	SHC	MBh	SHC	MBh	SHC	MBh	SHC	MBh	SHC	MBh	SHC
4000	75	135	113	152	87	166	59	128	110	144	84	157	56	121.3	107.0	136.2	81.0	148.3	52.7
	80	135	134	152	109	166	81	128	128	144	106	158	78	121.5	121.4	136.2	103.0	148.6	75.1
	85	140	140	151	131	166	104	134	134	144	128	158	101	128.7	128.7	136.1	124.8	148.9	97.4
	90	148	148	151	151	166	126	142	142	144	144	158	123	136.0	136.0	136.2	136.1	148.8	119.4
4500	75	137	121	154	92	168	60	131	118	146	89	160	57	123.3	114.8	138.2	85.4	150.0	53.7
	80	138	137	154	117	169	85	131	131	146	113	160	82	125.1	125.1	138.1	110.2	150.4	78.9
	85	145	145	154	141	169	110	139	139	146	138	160	107	133.0	133.0	137.8	134.5	150.7	104.0
	90	153	153	154	154	169	135	147	147	147	147	160	132	140.3	140.3	140.5	140.5	150.5	128.7
5000	75	139	129	156	96	170	61	132	126	148	93	161	58	124.7	122.3	139.7	89.7	151.4	54.7
	80	141	141	156	124	171	89	135	135	148	121	162	86	128.6	128.6	139.6	117.2	151.9	82.7
	85	149	149	156	151	171	117	143	143	148	147	162	114	136.5	136.5	139.2	138.9	152.1	110.5
	90	157	157	157	157	171	144	151	151	151	151	162	141	143.7	143.7	143.9	143.9	151.9	137.9
5500	75	141	137	158	101	172	62	133	133	150	97	162	59	125.8	125.6	140.9	94.1	152.4	55.7
	80	144	144	158	131	172	93	138	138	149	128	163	90	131.5	131.5	140.8	124.2	153.1	86.5
	85	153	153	157	157	173	124	146	146	149	149	163	121	139.4	139.4	140.3	140.1	153.6	117.0
	90	161	161	161	161	172	154	154	154	154	154	163	151	146.4	146.4	146.5	146.5	152.8	147.1
6000	75	142	142	159	105	173	63	135	134	151	102	163	60	126.8	126.5	141.9	98.4	153.3	56.6
	80	147	147	159	138	174	97	141	141	150	135	164	94	134.0	134.0	141.6	131.2	154.2	90.3
	85	156	156	158	158	174	130	149	149	150	150	164	127	141.9	141.9	142.0	142.0	153.9	123.8
	90	164	164	164	164	173	163	157	157	157	157	164	160	148.9	148.9	149.0	149.0	153.3	152.9

Air Flow cfm	Ent DB (°F)	Ambient Temperature																	
		115						120						125					
		Entering Wet Bulb																	
		61		67		73		61		67		73		61		67		73	
		MBh	SHC	MBh	SHC	MBh	SHC	MBh	SHC	MBh	SHC	MBh	SHC	MBh	SHC	MBh	SHC	MBh	SHC
4000	75	114.1	103.8	127.9	77.7	138.5	49.3	110.4	102.1	123.6	76.0	133.4	47.5	106.5	100.4	119.0	74.1	127.9	45.6
	80	115.3	115.3	127.9	99.7	138.9	71.7	112.3	112.3	123.6	98.0	133.7	69.9	109.1	109.1	119.1	96.2	128.3	68.1
	85	122.6	122.6	127.8	121.5	139.2	94.0	119.3	119.3	123.3	119.7	134.1	92.3	115.7	115.7	118.7	117.8	128.8	90.4
	90	129.4	129.4	129.5	129.5	139.2	116.0	125.8	125.8	125.9	125.9	134.1	114.3	121.9	121.9	122.0	122.0	128.7	112.4
4500	75	115.8	111.5	129.6	82.0	140.0	50.3	111.8	109.7	125.1	80.3	134.6	48.4	107.8	107.6	120.4	78.5	128.9	46.5
	80	119.0	119.0	129.5	106.8	140.4	75.5	115.8	115.8	125.0	105.0	135.1	73.7	112.3	112.3	120.3	103.2	129.5	71.8
	85	126.4	126.4	129.2	129.0	140.7	100.6	122.8	122.8	124.7	124.5	135.3	98.7	119.0	119.0	120.0	119.8	129.7	96.8
	90	133.1	133.1	133.2	133.2	140.5	125.2	129.1	129.1	129.3	129.3	135.2	123.4	124.9	124.9	125.0	125.0	129.5	121.5
5000	75	116.9	116.7	130.9	86.4	141.0	51.2	113.0	112.8	126.3	84.6	135.5	49.4	108.9	108.7	121.4	82.8	129.7	47.5
	80	122.1	122.1	130.8	113.8	141.7	79.3	118.7	118.7	126.1	112.0	136.3	77.5	114.9	114.9	121.3	110.2	130.6	75.6
	85	129.5	129.5	130.4	130.2	141.8	107.0	125.7	125.7	125.9	125.8	136.3	105.2	121.6	121.6	121.7	121.7	130.5	103.3
	90	135.9	135.9	136.0	136.0	141.5	134.4	131.6	131.6	131.7	131.7	135.9	132.4	127.0	127.0	127.1	127.1	130.0	129.5
5500	75	118.0	117.8	131.9	90.7	141.8	52.1	114.0	113.8	127.2	88.9	136.2	50.3	109.9	109.8	122.2	87.1	130.3	48.4
	80	124.7	124.7	131.7	120.8	142.7	83.0	121.0	121.0	127.0	119.0	137.3	81.2	117.1	117.1	121.9	117.1	131.5	79.4
	85	132.0	132.0	132.1	132.1	142.6	113.5	127.9	127.9	128.0	128.0	137.0	111.6	123.6	123.6	123.7	123.7	131.1	109.7
	90	138.2	138.2	138.3	138.3	142.0	141.6	133.7	133.7	133.8	133.8	136.3	135.9	128.8	128.8	128.9	128.9	130.3	130.0
6000	75	118.9	118.8	132.7	94.9	142.5	53.1	115.3	115.3	127.8	93.1	136.8	51.2	111.6	111.6	122.8	91.3	130.8	49.3
	80	126.8	126.8	132.4	127.7	143.7	86.9	123.0	123.0	127.4	125.8	138.0	85.1	118.9	118.9	122.2	121.9	132.0	83.1
	85	134.0	134.0	134.1	134.1	143.2	119.9	129.7	129.7	129.8	129.8	137.5	118.1	125.2	125.2	125.3	125.3	131.5	116.2
	90	140.3	140.3	140.3	140.3	142.4	142.0	135.5	135.5	135.6	135.6	136.7	136.4	130.4	130.4	130.4	130.4	130.8	130.5

Notes:

1. All capacities shown are gross and have not considered indoor fan heat. To obtain **NET** cooling capacity subtract indoor fan heat. For indoor fan heat formula, refer to appropriate airflow table notes.
2. MBh = Total Gross Capacity
3. SHC = Sensible Heat Capacity
4. * Stands for both downflow and horizontal unit.

Table 18. Gross cooling capacities 15 tons three phase standard efficiency T/YS*180G3,4,W,K

Air Flow cfm	Ent DB (°F)	Ambient Temperature																	
		85						95						105					
		Entering Wet Bulb																	
		61		67		73		61		67		73		61		67		73	
		MBh	SHC	MBh	SHC	MBh	SHC	MBh	SHC	MBh	SHC	MBh	SHC	MBh	SHC	MBh	SHC	MBh	SHC
4800	75	163.2	138.4	185.0	107.5	206.8	74.7	155.6	134.9	176.1	103.9	195.7	70.7	147.4	131.1	166.3	99.8	183.0	66.1
	80	162.9	162.6	185.1	134.2	206.9	101.8	155.4	155.2	176.2	130.5	195.8	97.7	147.3	147.0	166.3	126.5	183.1	93.1
	85	164.5	164.4	185.0	160.7	206.9	128.7	157.8	157.7	176.0	157.1	195.9	124.6	151.2	151.2	166.2	152.9	183.2	120.0
	90	173.3	173.3	184.6	184.2	207.0	155.3	167.1	167.1	175.7	175.4	195.9	151.3	160.1	160.1	166.1	165.8	183.2	146.7
5400	75	167.9	148.7	190.1	113.9	211.1	76.6	159.8	145.1	180.5	110.0	198.9	72.2	150.9	141.1	170.0	105.8	185.0	67.4
	80	167.5	167.2	190.1	143.8	211.2	107.0	159.6	159.3	180.5	140.0	199.0	102.7	151.0	150.7	170.0	135.8	185.2	97.8
	85	170.5	170.5	189.9	173.5	211.3	137.2	164.2	164.2	180.3	169.6	199.1	132.9	157.1	157.1	169.8	165.4	185.3	128.0
	90	180.7	180.7	189.4	189.1	211.3	167.2	174.0	174.0	180.0	179.7	199.2	162.9	166.3	166.3	169.8	169.5	185.4	158.0
6000	75	171.7	158.9	194.2	120.0	214.3	78.2	163.1	155.1	184.1	115.9	201.1	73.6	153.9	151.0	173.0	111.6	186.5	68.6
	80	171.3	171.0	194.2	153.2	214.4	112.0	162.8	162.6	184.1	149.2	201.3	107.4	154.0	153.9	173.0	144.9	186.6	102.3
	85	176.6	176.6	193.8	186.2	214.4	145.5	169.8	169.8	183.6	181.7	201.4	141.0	162.2	162.2	172.5	172.1	186.7	135.9
	90	187.2	187.2	193.3	192.9	214.5	178.8	179.9	179.9	183.4	183.2	201.4	174.3	171.6	171.6	172.9	172.8	186.6	169.2
6600	75	174.9	168.9	197.5	125.9	216.5	79.6	165.9	164.6	187.0	121.7	202.5	74.8	156.2	155.8	175.3	117.2	188.2	70.0
	80	174.4	174.2	197.5	162.5	216.7	116.8	165.8	165.7	186.9	158.3	202.6	112.0	156.7	156.6	175.2	153.8	188.3	107.1
	85	181.9	181.9	196.9	196.4	216.8	153.7	174.7	174.7	186.3	185.8	202.7	148.9	166.5	166.5	174.7	174.3	188.4	144.0
	90	192.8	192.8	196.4	196.1	216.8	190.3	184.9	184.9	186.5	186.3	202.9	185.5	176.0	176.0	176.1	176.1	188.3	180.6
7200	75	177.6	177.1	200.3	131.7	218.1	80.9	168.3	167.8	189.3	127.4	204.3	76.2	158.2	157.8	177.1	122.8	189.5	71.3
	80	177.2	177.0	200.3	171.5	218.3	121.4	168.5	168.3	189.2	167.3	204.4	116.8	160.2	160.2	177.0	162.6	189.7	111.8
	85	186.6	186.6	199.4	198.9	218.4	161.7	178.9	178.9	188.4	187.9	204.5	157.0	170.3	170.3	176.4	175.9	189.8	152.1
	90	197.7	197.7	199.4	199.2	218.4	201.7	189.3	189.3	189.4	189.2	204.2	196.9	179.6	179.6	179.6	179.6	189.5	188.8

Air Flow cfm	Ent DB (°F)	Ambient Temperature																	
		115						120						125					
		Entering Wet Bulb																	
		61		67		73		61		67		73		61		67		73	
		MBh	SHC	MBh	SHC	MBh	SHC	MBh	SHC	MBh	SHC	MBh	SHC	MBh	SHC	MBh	SHC	MBh	SHC
4800	75	138.6	127.2	155.7	95.6	168.4	61.0	134.2	125.2	150.1	93.3	160.9	58.4	-	-	144.2	91.0	153.4	55.8
	80	138.8	138.5	155.7	122.2	168.6	88.0	134.5	134.3	150.1	120.0	161.0	85.4	-	-	144.3	117.7	153.5	82.8
	85	144.0	144.0	155.6	148.6	168.7	114.9	140.2	140.2	150.0	146.4	161.1	112.3	136.3	136.3	144.2	143.7	153.6	109.7
	90	152.4	152.4	155.7	155.5	168.8	141.6	148.2	148.2	150.3	150.0	161.1	138.9	143.8	143.8	144.8	144.7	153.7	136.4
5400	75	141.6	137.0	158.7	101.3	170.1	62.3	136.9	134.9	152.6	99.0	162.5	59.7	132.1	131.8	146.3	96.6	154.4	57.0
	80	142.0	141.9	158.7	131.3	170.2	92.7	137.6	137.4	152.7	128.9	162.6	90.1	133.1	132.9	146.4	126.5	154.6	87.4
	85	149.3	149.3	158.4	158.0	170.3	122.8	145.2	145.2	152.5	152.1	162.7	120.3	140.8	140.8	146.3	145.9	154.7	117.6
	90	157.8	157.8	159.0	158.8	170.4	152.8	153.1	153.1	153.3	153.1	162.8	150.3	147.9	147.9	148.0	148.0	154.8	147.6
6000	75	144.0	143.6	160.9	106.9	171.6	63.5	139.0	138.6	154.5	104.5	163.5	60.9	134.0	133.6	147.8	102.0	155.0	58.1
	80	144.8	144.8	160.9	140.2	171.7	97.3	140.7	140.7	154.5	137.7	163.7	94.6	136.5	136.5	147.8	135.2	155.2	91.8
	85	153.8	153.8	160.6	160.3	171.8	130.9	149.2	149.2	154.4	154.0	163.8	128.2	144.4	144.4	147.9	147.5	155.4	125.4
	90	162.2	162.2	162.3	162.3	171.8	164.2	156.8	156.8	156.9	156.9	163.8	161.5	150.8	150.8	150.8	150.8	155.6	154.8
6600	75	146.0	145.6	162.6	112.4	172.5	64.8	140.8	140.4	155.9	109.9	164.1	62.0	135.4	135.1	148.9	107.3	155.2	59.1
	80	148.4	148.4	162.6	149.0	172.7	101.9	144.1	144.1	155.9	146.5	164.3	99.2	139.6	139.6	148.9	143.9	155.5	96.3
	85	157.5	157.5	162.3	161.9	172.9	138.8	152.6	152.6	155.6	155.2	164.5	136.1	147.2	147.2	148.8	148.5	155.8	133.2
	90	165.5	165.5	165.6	165.6	172.9	172.2	159.3	159.3	159.4	159.4	164.7	164.0	152.2	152.2	152.2	152.2	156.1	155.5
7200	75	147.6	147.2	163.9	117.8	173.2	66.0	142.2	141.8	156.9	115.2	164.5	63.2	136.6	136.2	149.6	112.5	155.3	60.2
	80	151.6	151.6	163.8	157.7	173.4	106.5	147.0	147.0	156.9	155.1	164.7	103.6	142.1	142.1	149.6	149.0	155.5	100.7
	85	160.6	160.6	163.3	163.0	173.6	146.7	155.2	155.2	156.6	156.4	165.0	143.9	149.4	149.4	149.7	149.4	156.0	141.1
	90	167.9	167.9	167.9	167.9	173.7	173.0	160.7	160.7	160.8	160.8	165.2	164.6	153.9	153.9	154.0	154.0	156.4	155.7

Notes:

1. All capacities shown are gross and have not considered indoor fan heat. To obtain **NET** cooling capacity subtract indoor fan heat. For indoor fan heat formula, refer to appropriate airflow table notes.
2. MBh = Total Gross Capacity
3. SHC = Sensible Heat Capacity
4. *Stands for both downflow and horizontal unit.

Table 19. Gross cooling capacities 17½ tons three phase standard efficiency T/YS*210G3,4,W,K

Air Flow cfm	Ent DB (°F)	Ambient Temperature																	
		85						95						105					
		Entering Wet Bulb																	
		61		67		73		61		67		73		61		67		73	
		MBh	SHC	MBh	SHC	MBh	SHC	MBh	SHC	MBh	SHC	MBh	SHC	MBh	SHC	MBh	SHC	MBh	SHC
5600	75	186.0	161.1	210.2	124.5	233.8	85.5	176.4	156.7	199.5	120.1	221.1	80.9	166.4	152.2	188.0	115.4	207.2	76.0
	80	185.1	184.9	209.9	155.7	233.8	117.2	175.8	175.6	199.3	151.4	221.1	112.6	166.2	166.1	187.8	146.7	207.3	107.7
	85	191.8	191.8	209.4	186.6	233.7	148.7	184.3	184.3	198.6	182.2	221.0	144.1	176.1	176.1	187.1	177.5	207.2	139.2
	90	203.1	203.1	208.5	208.2	233.5	180.1	195.2	195.2	198.0	197.7	220.9	175.5	186.5	186.5	187.0	186.9	207.0	170.5
6300	75	189.9	172.8	214.5	131.5	237.5	87.3	179.9	168.3	203.2	126.9	224.3	82.7	169.5	163.7	191.1	122.1	209.7	77.6
	80	189.1	188.9	214.2	166.6	237.5	123.0	179.8	179.7	203.0	162.1	224.3	118.4	171.3	171.3	190.9	157.3	209.8	113.3
	85	199.0	199.0	213.3	201.1	237.4	158.5	191.0	191.0	202.1	196.4	224.2	153.8	182.3	182.3	190.0	189.1	209.8	148.9
	90	210.7	210.7	212.4	212.2	237.1	193.7	202.2	202.2	202.4	202.4	223.9	189.0	192.8	192.8	193.0	193.0	209.5	183.9
7000	75	193.1	184.2	218.0	138.3	240.3	89.1	182.8	179.0	206.3	133.6	226.6	84.4	171.9	171.4	193.7	128.7	211.5	79.2
	80	193.0	193.0	217.6	177.2	240.4	128.8	185.0	185.0	205.9	172.6	226.7	124.0	176.3	176.3	193.3	167.7	211.7	118.9
	85	205.2	205.2	216.5	213.8	240.3	168.2	196.7	196.7	204.5	204.1	226.7	163.5	187.4	187.4	191.9	191.6	211.8	158.4
	90	217.3	217.3	217.5	217.5	239.8	207.1	208.2	208.2	208.4	208.4	226.2	202.4	198.2	198.2	198.3	198.3	211.4	197.3
7700	75	195.7	193.8	220.8	144.9	242.6	90.8	184.9	184.5	208.7	140.2	228.4	86.0	173.6	173.2	195.7	135.3	212.8	80.7
	80	198.1	198.1	220.4	187.8	242.7	134.4	189.7	189.7	208.3	183.1	228.6	129.6	180.5	180.5	195.3	178.1	213.2	124.4
	85	210.5	210.5	218.6	218.1	242.7	177.8	201.6	201.6	206.5	206.2	228.6	173.0	191.7	191.7	193.7	193.4	213.2	167.8
	90	222.9	222.9	223.1	223.1	242.0	220.6	213.4	213.4	213.5	213.5	228.1	215.8	202.6	202.6	202.7	202.7	212.8	208.8
8400	75	197.6	197.1	223.2	151.5	244.3	92.4	186.5	186.0	210.7	146.8	229.8	87.6	175.1	174.8	197.6	141.9	213.8	82.3
	80	202.5	202.5	222.6	198.2	244.5	140.0	193.8	193.8	210.2	193.5	230.1	135.2	184.2	184.2	196.9	188.5	214.3	129.9
	85	215.2	215.2	220.4	220.0	244.5	187.3	205.9	205.9	208.2	207.8	230.1	182.5	195.6	195.6	195.7	195.7	214.3	177.2
	90	227.8	227.8	228.0	228.0	243.9	234.0	217.7	217.7	217.8	217.8	229.5	226.5	206.2	206.2	206.3	206.3	213.4	212.7

Air Flow cfm	Ent DB (°F)	Ambient Temperature																	
		115						120						125					
		Entering Wet Bulb																	
		61		67		73		61		67		73		61		67		73	
		MBh	SHC	MBh	SHC	MBh	SHC	MBh	SHC	MBh	SHC	MBh	SHC	MBh	SHC	MBh	SHC	MBh	SHC
5600	75	156.8	147.9	176.0	110.7	192.2	70.7	152.4	145.9	170.0	108.3	184.3	68.0	-	-	164.1	106.0	176.1	65.2
	80	157.8	157.8	175.8	141.9	192.3	102.5	154.1	154.1	169.9	139.6	184.5	99.8	-	-	164.0	137.3	176.5	97.0
	85	167.6	167.6	175.3	171.8	192.4	134.1	163.4	163.4	169.2	167.8	184.7	131.4	159.1	159.1	163.2	162.9	176.8	128.7
	90	177.1	177.1	177.2	177.2	192.2	165.3	172.1	172.1	172.2	172.2	184.5	162.6	166.9	166.9	167.0	167.0	176.5	159.9
6300	75	159.4	157.6	178.6	117.2	193.9	72.2	154.5	154.1	172.3	114.8	185.6	69.4	150.2	149.9	166.1	112.5	177.1	66.6
	80	163.0	163.0	178.4	152.4	194.2	108.0	158.9	158.9	172.1	149.9	186.0	105.2	154.9	154.9	165.9	147.6	177.7	102.4
	85	173.0	173.0	177.3	177.0	194.3	143.5	168.3	168.3	171.1	170.8	186.2	140.8	163.4	163.4	164.9	164.6	177.9	138.0
	90	182.5	182.5	182.7	182.7	194.1	178.6	177.0	177.0	177.2	177.2	186.0	175.9	171.1	171.1	171.2	171.2	177.7	172.5
7000	75	161.1	160.8	180.6	123.7	195.1	73.7	156.2	155.9	174.2	121.3	186.5	70.8	151.7	151.4	167.8	118.9	177.7	67.9
	80	167.4	167.4	180.3	162.7	195.6	113.5	162.9	162.9	173.8	160.2	187.2	110.7	158.5	158.5	167.3	157.8	178.6	107.8
	85	177.4	177.4	179.1	178.7	195.7	152.9	172.2	172.2	172.7	172.5	187.3	150.1	166.8	166.8	166.9	166.9	178.6	147.2
	90	187.0	187.0	187.1	187.1	195.4	190.8	180.9	180.9	181.0	181.0	187.0	185.9	174.4	174.4	174.5	174.5	178.1	177.5
7700	75	162.7	162.4	182.3	130.3	195.9	75.2	157.6	157.3	175.7	127.8	187.1	72.3	153.1	152.9	169.2	125.3	178.1	69.3
	80	171.1	171.1	181.8	173.0	196.6	118.9	166.3	166.3	175.1	170.3	188.1	116.1	161.5	161.5	168.5	166.3	179.4	113.3
	85	181.2	181.2	181.3	181.3	196.6	162.3	175.6	175.6	175.7	175.7	188.0	159.4	169.7	169.7	169.8	169.8	179.1	156.8
	90	190.5	190.5	190.6	190.6	196.0	195.3	183.8	183.8	183.9	183.9	187.2	186.7	176.6	176.6	176.7	176.7	178.2	177.7
8400	75	164.1	163.9	183.9	136.8	196.5	76.6	159.1	159.1	177.0	134.2	187.5	73.7	154.9	154.9	170.1	131.7	-	-
	80	174.2	174.2	183.2	181.5	197.6	124.4	169.1	169.1	176.0	175.3	188.9	121.6	164.0	164.0	169.0	168.5	-	-
	85	184.4	184.4	184.5	184.5	197.3	171.6	178.5	178.5	178.6	178.6	188.5	169.2	172.2	172.2	172.2	172.2	-	-
	90	193.2	193.2	193.3	193.3	196.3	195.8	185.9	185.9	186.0	186.0	187.3	186.8	177.9	177.9	177.9	177.9	-	-

Notes:

1. All capacities shown are gross and have not considered indoor fan heat. To obtain **NET** cooling capacity subtract indoor fan heat. For indoor fan heat formula, refer to appropriate airflow table notes.
2. MBh = Total Gross Capacity
3. SHC = Sensible Heat Capacity
4. *Stands for both downflow and horizontal unit.

Table 20. Gross cooling capacities 17½ tons three phase standard efficiency T/YS*211G3,4,W

Air Flow cfm	Ent DB (°F)	Ambient Temperature																	
		85						95						105					
		Entering Wet Bulb																	
		61		67		73		61		67		73		61		67		73	
		MBh	SHC	MBh	SHC	MBh	SHC	MBh	SHC	MBh	SHC	MBh	SHC	MBh	SHC	MBh	SHC	MBh	SHC
5600	75	186.0	161.1	210.2	124.5	233.8	85.5	176.4	156.7	199.5	120.1	221.1	80.9	166.4	152.2	188.0	115.4	207.2	76.0
	80	185.1	184.9	209.9	155.7	233.8	117.2	175.8	175.6	199.3	151.4	221.1	112.6	166.2	166.1	187.8	146.7	207.3	107.7
	85	191.8	191.8	209.4	186.6	233.7	148.7	184.3	184.3	198.6	182.2	221.0	144.1	176.1	176.1	187.1	177.5	207.2	139.2
	90	203.1	203.1	208.5	208.2	233.5	180.1	195.2	195.2	198.0	197.7	220.9	175.5	186.5	186.5	187.0	186.9	207.0	170.5
6300	75	189.9	172.8	214.5	131.5	237.5	87.3	179.9	168.3	203.2	126.9	224.3	82.7	169.5	163.7	191.1	122.1	209.7	77.6
	80	189.1	188.9	214.2	166.6	237.5	123.0	179.8	179.7	203.0	162.1	224.3	118.4	171.3	171.3	190.9	157.3	209.8	113.3
	85	199.0	199.0	213.3	201.1	237.4	158.5	191.0	191.0	202.1	196.4	224.2	153.8	182.3	182.3	190.0	189.1	209.8	148.9
	90	210.7	210.7	212.4	212.2	237.1	193.7	202.2	202.2	202.4	202.4	223.9	189.0	192.8	192.8	193.0	193.0	209.5	183.9
7000	75	193.1	184.2	218.0	138.3	240.3	89.1	182.8	179.0	206.3	133.6	226.6	84.4	171.9	171.4	193.7	128.7	211.5	79.2
	80	193.0	193.0	217.6	177.2	240.4	128.8	185.0	185.0	205.9	172.6	226.7	124.0	176.3	176.3	193.3	167.7	211.7	118.9
	85	205.2	205.2	216.5	213.8	240.3	168.2	196.7	196.7	204.5	204.1	226.7	163.5	187.4	187.4	191.9	191.6	211.8	158.4
	90	217.3	217.3	217.5	217.5	239.8	207.1	208.2	208.2	208.4	208.4	226.2	202.4	198.2	198.2	198.3	198.3	211.4	197.3
7700	75	195.7	193.8	220.8	144.9	242.6	90.8	184.9	184.5	208.7	140.2	228.4	86.0	173.6	173.2	195.7	135.3	212.8	80.7
	80	198.1	198.1	220.4	187.8	242.7	134.4	189.7	189.7	208.3	183.1	228.6	129.6	180.5	180.5	195.3	178.1	213.2	124.4
	85	210.5	210.5	218.6	218.1	242.7	177.8	201.6	201.6	206.5	206.2	228.6	173.0	191.7	191.7	193.7	193.4	213.2	167.8
	90	222.9	222.9	223.1	223.1	242.0	220.6	213.4	213.4	213.5	213.5	228.1	215.8	202.6	202.6	202.7	202.7	212.8	208.8
8400	75	197.6	197.1	223.2	151.5	244.3	92.4	186.5	186.0	210.7	146.8	229.8	87.6	175.1	174.8	197.6	141.9	213.8	82.3
	80	202.5	202.5	222.6	198.2	244.5	140.0	193.8	193.8	210.2	193.5	230.1	135.2	184.2	184.2	196.9	188.5	214.3	129.9
	85	215.2	215.2	220.4	220.0	244.5	187.3	205.9	205.9	208.2	207.8	230.1	182.5	195.6	195.6	195.7	195.7	214.3	177.2
	90	227.8	227.8	228.0	228.0	243.9	234.0	217.7	217.7	217.8	217.8	229.5	226.5	206.2	206.2	206.3	206.3	213.4	212.7

Air Flow cfm	Ent DB (°F)	Ambient Temperature																	
		115						120						125					
		Entering Wet Bulb																	
		61		67		73		61		67		73		61		67		73	
		MBh	SHC	MBh	SHC	MBh	SHC	MBh	SHC	MBh	SHC	MBh	SHC	MBh	SHC	MBh	SHC	MBh	SHC
5600	75	156.8	147.9	176.0	110.7	192.2	70.7	152.4	145.9	170.0	108.3	184.3	68.0	-	-	164.1	106.0	176.1	65.2
	80	157.8	157.8	175.8	141.9	192.3	102.5	154.1	154.1	169.9	139.6	184.5	99.8	-	-	164.0	137.3	176.5	97.0
	85	167.6	167.6	175.3	171.8	192.4	134.1	163.4	163.4	169.2	167.8	184.7	131.4	159.1	159.1	163.2	162.9	176.8	128.7
	90	177.1	177.1	177.2	177.2	192.2	165.3	172.1	172.1	172.2	172.2	184.5	162.6	166.9	166.9	167.0	167.0	176.5	159.9
6300	75	159.4	157.6	178.6	117.2	193.9	72.2	154.5	154.1	172.3	114.8	185.6	69.4	150.2	149.9	166.1	112.5	177.1	66.6
	80	163.0	163.0	178.4	152.4	194.2	108.0	158.9	158.9	172.1	149.9	186.0	105.2	154.9	154.9	165.9	147.6	177.7	102.4
	85	173.0	173.0	177.3	177.0	194.3	143.5	168.3	168.3	171.1	170.8	186.2	140.8	163.4	163.4	164.9	164.6	177.9	138.0
	90	182.5	182.5	182.7	182.7	194.1	178.6	177.0	177.0	177.2	177.2	186.0	175.9	171.1	171.1	171.2	171.2	177.7	172.5
7000	75	161.1	160.8	180.6	123.7	195.1	73.7	156.2	155.9	174.2	121.3	186.5	70.8	151.7	151.4	167.8	118.9	177.7	67.9
	80	167.4	167.4	180.3	162.7	195.6	113.5	162.9	162.9	173.8	160.2	187.2	110.7	158.5	158.5	167.3	157.8	178.6	107.8
	85	177.4	177.4	179.1	178.7	195.7	152.9	172.2	172.2	172.7	172.5	187.3	150.1	166.8	166.8	166.9	166.9	178.6	147.2
	90	187.0	187.0	187.1	187.1	195.4	190.8	180.9	180.9	181.0	181.0	187.0	185.9	174.4	174.4	174.5	174.5	178.1	177.5
7700	75	162.7	162.4	182.3	130.3	195.9	75.2	157.6	157.3	175.7	127.8	187.1	72.3	153.1	152.9	169.2	125.3	178.1	69.3
	80	171.1	171.1	181.8	173.0	196.6	118.9	166.3	166.3	175.1	170.3	188.1	116.1	161.5	161.5	168.5	166.3	179.4	113.3
	85	181.2	181.2	181.3	181.3	196.6	162.3	175.6	175.6	175.7	175.7	188.0	159.4	169.7	169.7	169.8	169.8	179.1	156.8
	90	190.5	190.5	190.6	190.6	196.0	195.3	183.8	183.8	183.9	183.9	187.2	186.7	176.6	176.6	176.7	176.7	178.2	177.7
8400	75	164.1	163.9	183.9	136.8	196.5	76.6	159.1	159.1	177.0	134.2	187.5	73.7	154.9	154.9	170.1	131.7	-	-
	80	174.2	174.2	183.2	181.5	197.6	124.4	169.1	169.1	176.0	175.3	188.9	121.6	164.0	164.0	169.0	168.5	-	-
	85	184.4	184.4	184.5	184.5	197.3	171.6	178.5	178.5	178.6	178.6	188.5	169.2	172.2	172.2	172.2	172.2	-	-
	90	193.2	193.2	193.3	193.3	196.3	195.8	185.9	185.9	186.0	186.0	187.3	186.8	177.9	177.9	177.9	177.9	-	-

Notes:

1. All capacities shown are gross and have not considered indoor fan heat. To obtain **NET** cooling capacity subtract indoor fan heat. For indoor fan heat formula, refer to appropriate airflow table notes.
2. MBh = Total Gross Capacity
3. SHC = Sensible Heat Capacity
4. *Stands for both downflow and horizontal unit.

Table 21. Gross cooling capacities 20 tons three phase standard efficiency T/YS*240G3,4,W,K

Air Flow cfm	Ent DB (°F)	Ambient Temperature																	
		85						95						105					
		Entering Wet Bulb																	
		61		67		73		61		67		73		61		67		73	
		MBh	SHC	MBh	SHC	MBh	SHC	MBh	SHC	MBh	SHC	MBh	SHC	MBh	SHC	MBh	SHC	MBh	SHC
6400	75	230.4	187.9	260.3	147.4	287.7	103.3	219.7	182.8	247.5	142.0	271.7	97.5	208.2	177.5	233.5	136.2	253.6	91.0
	80	229.9	221.9	260.2	182.1	287.8	138.7	219.2	216.9	247.4	176.7	271.9	132.8	207.8	207.5	233.4	170.9	253.9	126.3
	85	231.6	231.5	260.0	216.6	287.9	173.7	222.2	222.2	247.2	211.2	272.0	167.9	213.1	213.1	233.1	205.4	254.1	161.4
	90	244.0	244.0	259.2	250.6	287.9	208.5	235.1	235.1	246.5	245.2	272.1	202.7	225.2	225.2	232.8	232.5	254.4	196.3
7200	75	236.0	200.9	265.9	154.9	292.1	105.1	224.6	195.6	252.3	149.4	275.0	99.0	212.2	190.0	237.4	143.4	255.9	92.3
	80	235.3	234.9	265.7	193.9	292.3	144.8	224.0	223.7	252.1	188.4	275.2	138.7	211.9	211.7	237.3	182.4	256.1	132.0
	85	239.6	239.6	265.4	232.7	292.4	184.2	230.6	230.6	251.7	227.1	275.5	178.2	220.6	220.6	236.9	221.1	256.5	171.5
	90	253.6	253.6	264.7	264.3	292.5	223.4	244.0	244.0	251.2	250.9	275.7	217.4	233.1	233.1	236.8	236.5	256.6	211.2
8000	75	240.4	213.5	270.2	162.2	295.3	106.7	228.3	208.1	256.0	156.5	277.2	100.4	215.3	202.4	240.4	150.4	258.3	93.9
	80	239.6	239.3	270.0	205.6	295.5	150.8	227.9	227.6	255.7	199.9	277.6	144.5	215.6	215.4	240.3	193.8	258.6	138.0
	85	247.4	247.4	269.5	248.5	295.8	194.6	237.8	237.8	255.2	242.8	278.0	188.4	227.0	227.0	239.7	236.7	258.8	181.7
	90	261.8	261.8	268.9	268.5	295.9	238.2	251.4	251.4	255.0	254.7	278.1	232.0	239.5	239.5	240.4	240.2	258.4	225.6
8800	75	243.8	225.9	273.8	169.4	297.6	108.2	231.2	220.4	258.9	163.6	279.5	101.9	217.8	214.6	242.7	157.3	260.1	95.4
	80	243.2	242.9	273.5	217.1	298.0	156.7	231.5	231.3	258.8	211.5	279.5	150.4	219.1	219.1	242.7	205.1	260.4	143.9
	85	254.2	254.2	272.7	264.2	298.3	204.9	243.9	243.9	258.0	257.1	279.9	198.5	232.4	232.4	242.1	241.6	260.5	192.0
	90	268.8	268.8	272.5	272.3	298.4	252.8	257.6	257.6	258.7	258.4	279.8	246.5	244.7	244.7	244.9	244.9	260.4	239.8
9600	75	246.6	238.2	276.6	176.5	299.5	109.6	233.8	232.7	261.3	170.6	281.4	103.5	219.9	219.4	244.6	164.2	261.5	96.9
	80	246.7	246.5	276.5	228.6	299.8	162.5	234.7	234.7	261.3	222.7	281.7	156.4	223.6	223.6	244.5	216.3	261.9	149.8
	85	260.1	260.1	275.5	274.8	300.3	215.2	249.2	249.2	260.3	259.7	281.7	209.0	237.0	237.0	243.7	243.3	262.2	202.4
	90	274.9	274.9	276.0	275.8	300.2	267.3	262.9	262.9	263.1	263.1	281.3	260.9	249.0	249.0	249.2	249.2	261.8	254.3

Air Flow cfm	Ent DB (°F)	Ambient Temperature																	
		115						120						125					
		Entering Wet Bulb																	
		61		67		73		61		67		73		61		67		73	
		MBh	SHC	MBh	SHC	MBh	SHC	MBh	SHC	MBh	SHC	MBh	SHC	MBh	SHC	MBh	SHC	MBh	SHC
6400	75	196.3	172.1	218.4	130.1	234.3	84.1	190.2	169.3	210.4	126.9	224.3	80.6	-	-	202.2	123.7	214.0	77.1
	80	196.0	195.8	218.4	164.8	234.5	119.4	190.1	189.9	210.5	161.7	224.6	116.0	-	-	202.4	158.5	214.4	112.4
	85	203.1	203.1	218.1	199.3	234.6	154.4	198.0	198.0	210.2	196.1	224.9	151.0	-	-	202.2	192.9	214.8	147.5
	90	214.2	214.2	218.0	217.8	234.7	189.3	208.2	208.2	210.3	210.1	225.0	185.9	-	-	202.5	202.3	214.9	182.4
7200	75	199.5	184.4	221.4	137.1	236.4	85.5	193.1	181.5	213.0	133.8	226.0	82.0	186.8	178.8	204.4	130.4	215.2	78.4
	80	199.6	199.5	221.4	176.2	236.7	125.3	193.6	193.5	213.1	172.9	226.4	121.7	187.8	187.8	204.6	169.6	215.7	118.1
	85	209.8	209.8	221.0	214.8	237.0	164.7	203.9	203.9	212.8	210.3	226.8	161.2	197.8	197.8	204.4	203.4	216.3	157.6
	90	220.8	220.8	221.5	221.3	237.0	203.9	214.0	214.0	214.1	214.1	226.7	200.3	206.6	206.6	206.7	206.7	216.2	196.8
8000	75	202.1	196.5	223.6	143.9	237.9	87.0	195.4	193.3	214.9	140.6	227.0	83.3	188.8	187.8	205.9	137.2	215.8	79.6
	80	203.3	203.3	223.7	187.4	238.3	131.1	197.8	197.8	215.0	184.0	227.6	127.5	192.1	192.1	206.0	180.6	216.6	123.8
	85	215.2	215.2	223.3	222.8	238.5	174.9	208.8	208.8	214.6	214.3	228.2	171.5	202.0	202.0	205.8	205.4	217.2	167.8
	90	225.9	225.9	226.1	226.1	238.6	218.3	218.3	218.3	218.4	218.4	228.0	214.8	209.9	209.9	210.0	210.0	217.0	210.6
8800	75	204.1	203.6	225.4	150.7	239.0	88.4	197.3	196.8	216.3	147.3	227.7	84.7	190.4	189.9	207.1	143.8	-	-
	80	207.8	207.8	225.4	198.5	239.5	136.9	201.8	201.8	216.3	195.1	228.5	133.3	195.7	195.7	207.1	191.6	-	-
	85	219.7	219.7	224.9	224.5	240.0	185.2	212.7	212.7	215.9	215.5	229.0	181.6	205.2	205.2	206.8	206.4	-	-
	90	229.8	229.8	229.9	229.9	239.7	232.8	221.2	221.2	221.3	221.3	228.9	224.7	212.2	212.2	212.3	212.3	-	-
9600	75	205.8	205.3	226.7	157.5	239.7	89.8	198.5	198.1	217.4	154.0	228.2	86.0	191.4	191.0	-	-	-	-
	80	211.6	211.6	226.6	209.5	240.4	142.7	205.2	205.2	217.3	206.0	229.1	139.1	198.5	198.5	-	-	-	-
	85	223.3	223.3	226.1	225.7	240.9	195.4	215.8	215.8	216.9	216.5	229.6	191.7	207.7	207.7	-	-	-	-
	90	232.6	232.6	232.7	232.7	240.7	239.0	223.6	223.6	223.7	223.7	229.5	228.8	214.5	214.5	-	-	-	-

Notes:

1. All capacities shown are gross and have not considered indoor fan heat. To obtain **NET** cooling capacity subtract indoor fan heat. For indoor fan heat formula, refer to appropriate airflow table notes.
2. MBh = Total Gross Capacity
3. SHC = Sensible Heat Capacity
4. *Stands for both downflow and horizontal unit.

Table 22. Gross cooling capacities 25 tons three phase standard efficiency T/YS*300G3,4,W,K

Air Flow cfm	Ent DB (°F)	Ambient Temperature																	
		85						95						105					
		Entering Wet Bulb																	
		61		67		73		61		67		73		61		67		73	
		MBh	SHC	MBh	SHC	MBh	SHC	MBh	SHC	MBh	SHC	MBh	SHC	MBh	SHC	MBh	SHC	MBh	SHC
7000	75	257.6	212.0	289.0	165.3	317.0	114.6	245.8	206.5	274.9	159.4	299.4	108.2	233.1	200.6	259.5	153.1	279.6	101.1
	80	257.0	250.5	288.9	204.5	317.1	154.5	245.3	244.2	274.8	198.7	299.5	148.1	232.7	232.3	259.5	192.4	279.8	141.0
	85	259.2	259.1	288.8	243.6	317.2	194.2	249.7	249.7	274.6	237.7	299.7	187.7	239.4	239.4	259.2	231.3	280.1	180.7
	90	273.4	273.4	287.9	282.0	317.2	233.5	263.5	263.5	274.1	273.6	299.8	227.1	252.3	252.3	258.7	258.4	280.4	220.2
8000	75	264.4	228.7	295.5	175.0	321.8	116.8	251.7	223.0	280.5	168.9	302.9	110.1	238.0	216.8	264.2	162.4	281.8	102.7
	80	263.5	263.0	295.4	219.8	322.0	162.4	250.9	250.6	280.4	213.7	303.1	155.7	237.6	237.4	264.1	207.3	282.0	148.3
	85	270.1	270.1	295.0	264.3	322.1	207.6	259.9	259.9	279.9	258.2	303.4	201.0	248.6	248.6	263.6	251.6	282.5	193.7
	90	285.1	285.1	294.2	293.7	322.2	252.7	274.1	274.1	279.3	279.0	303.6	246.1	261.6	261.6	263.6	263.4	282.7	238.7
9000	75	269.4	245.0	300.5	184.4	325.2	118.8	256.0	239.1	284.8	178.2	305.1	111.8	241.7	232.8	267.6	171.5	284.3	104.8
	80	268.4	268.1	300.4	234.8	325.4	170.0	255.7	255.5	284.7	228.6	305.4	163.1	242.3	242.1	267.6	222.1	284.5	156.0
	85	279.4	279.4	299.7	284.7	325.7	221.0	268.4	268.4	283.9	278.5	305.9	214.1	256.1	256.1	267.0	266.2	284.7	206.9
	90	294.7	294.7	299.1	298.8	325.8	271.6	282.6	282.6	284.2	284.0	306.1	264.8	268.8	268.8	269.0	269.0	284.4	257.6
10000	75	273.3	261.1	304.4	193.6	327.7	120.8	259.5	255.0	288.0	187.3	307.8	114.0	244.7	244.0	270.1	180.4	286.4	106.9
	80	273.1	272.9	304.3	249.8	328.0	177.7	260.3	260.3	288.1	243.4	307.8	170.8	248.3	248.3	270.2	236.5	286.7	163.8
	85	287.3	287.3	303.3	302.5	328.3	234.3	275.4	275.4	287.0	286.2	307.9	227.3	262.1	262.1	269.1	268.5	286.9	220.4
	90	302.6	302.6	303.8	303.5	328.2	290.4	289.5	289.5	289.7	289.7	307.7	283.6	274.4	274.4	274.5	274.5	286.4	276.4
11000	75	276.5	275.7	307.6	202.8	330.2	122.9	262.3	261.6	290.6	196.3	310.1	116.2	247.0	246.2	272.1	189.3	288.1	109.0
	80	277.6	277.6	307.6	264.5	330.3	185.5	266.1	266.1	290.6	258.0	310.3	178.8	253.4	253.4	272.0	251.0	288.4	171.5
	85	293.9	293.9	306.1	305.3	331.2	247.7	281.3	281.3	289.1	288.4	310.4	241.0	267.1	267.1	270.8	270.4	288.6	233.8
	90	309.2	309.2	309.4	309.4	330.3	309.3	295.0	295.0	295.2	295.2	309.5	302.3	278.5	278.5	278.7	278.7	288.1	286.9

Air Flow cfm	Ent DB (°F)	Ambient Temperature																	
		115						120						125					
		Entering Wet Bulb																	
		61		67		73		61		67		73		61		67		73	
		MBh	SHC	MBh	SHC	MBh	SHC	MBh	SHC	MBh	SHC	MBh	SHC	MBh	SHC	MBh	SHC	MBh	SHC
7000	75	219.7	194.5	243.0	146.4	258.2	93.6	212.8	191.4	234.3	143.0	247.2	89.8	-	-	-	-	236.0	85.9
	80	219.4	219.2	243.0	185.7	258.2	133.4	212.8	212.5	234.3	182.3	247.5	129.7	-	-	-	-	236.2	125.8
	85	228.2	228.2	242.7	224.7	258.5	173.0	222.2	222.2	234.1	221.2	247.8	169.3	-	-	-	-	236.6	165.5
	90	239.8	239.8	242.5	242.2	258.7	212.5	233.0	233.0	234.1	233.9	247.9	208.7	-	-	-	-	236.8	204.9
8000	75	223.7	210.5	246.5	155.4	260.3	95.4	216.5	207.3	237.3	151.9	248.8	91.5	-	-	227.8	148.2	236.9	87.5
	80	224.1	224.0	246.6	200.4	260.5	140.9	217.8	217.8	237.4	196.8	249.1	137.1	-	-	228.0	193.2	237.3	133.1
	85	236.1	236.1	246.2	243.9	260.9	186.2	229.4	229.4	237.1	236.4	249.6	182.4	-	-	227.6	227.1	238.0	178.6
	90	247.4	247.4	247.6	247.6	260.9	231.2	239.5	239.5	239.7	239.7	249.6	227.3	-	-	231.1	231.1	238.0	223.4
9000	75	226.8	224.9	249.1	164.3	261.8	97.2	219.3	218.6	239.4	160.7	249.9	93.3	-	-	229.5	156.9	-	-
	80	230.0	230.0	249.1	214.9	262.2	148.5	223.5	223.5	239.5	211.2	250.3	144.6	-	-	229.6	207.4	-	-
	85	242.4	242.4	248.5	248.1	262.5	199.5	234.9	234.9	238.9	238.5	250.7	195.6	-	-	229.1	228.7	-	-
	90	252.9	252.9	253.0	253.0	262.4	249.9	243.8	243.8	243.9	243.9	251.0	246.1	-	-	233.9	233.9	-	-
10000	75	229.3	228.7	251.0	173.2	263.2	99.2	221.2	220.7	241.0	169.4	250.7	95.1	213.2	212.8	230.8	165.7	-	-
	80	235.2	235.2	250.9	229.2	263.6	156.2	228.2	228.2	240.9	225.5	251.4	152.2	220.9	220.9	230.7	221.7	-	-
	85	247.3	247.3	250.1	249.6	263.9	212.8	239.1	239.1	240.3	240.0	251.7	208.8	230.3	230.3	230.4	230.4	-	-
	90	256.6	256.6	256.7	256.7	263.7	262.7	246.2	246.2	246.3	246.3	251.6	250.6	236.1	236.1	236.2	236.2	-	-
11000	75	230.8	230.4	252.4	182.0	264.0	101.1	222.7	222.3	242.1	178.2	251.2	97.0	214.6	214.1	-	-	-	-
	80	239.4	239.4	252.2	243.6	264.7	163.8	232.0	232.0	242.0	238.9	252.1	159.8	224.1	224.1	-	-	-	-
	85	251.0	251.0	251.7	251.3	264.9	226.1	242.1	242.1	242.2	242.2	252.4	222.0	232.5	232.5	-	-	-	-
	90	258.7	258.7	258.8	258.8	264.6	263.8	248.7	248.7	248.8	248.8	252.1	251.4	237.7	237.7	-	-	-	-

Notes:

1. All capacities shown are gross and have not considered indoor fan heat. To obtain **NET** cooling capacity subtract indoor fan heat. For indoor fan heat formula, refer to appropriate airflow table notes.
2. MBh = Total Gross Capacity
3. SHC = Sensible Heat Capacity
4. *Stands for both downflow and horizontal unit.

Table 23. Gross cooling capacities 25 tons three phase standard efficiency T/YS*301G3,4,W

Air Flow cfm	Ent DB (°F)	Ambient Temperature																	
		85						95						105					
		Entering Wet Bulb																	
		61		67		73		61		67		73		61		67		73	
		MBh	SHC	MBh	SHC	MBh	SHC	MBh	SHC	MBh	SHC	MBh	SHC	MBh	SHC	MBh	SHC	MBh	SHC
7000	75	257.6	212.0	289.0	165.3	317.0	114.6	245.8	206.5	274.9	159.4	299.4	108.2	233.1	200.6	259.5	153.1	279.6	101.1
	80	257.0	250.5	288.9	204.5	317.1	154.5	245.3	244.2	274.8	198.7	299.5	148.1	232.7	232.3	259.5	192.4	279.8	141.0
	85	259.2	259.1	288.8	243.6	317.2	194.2	249.7	249.7	274.6	237.7	299.7	187.7	239.4	239.4	259.2	231.3	280.1	180.7
	90	273.4	273.4	287.9	282.0	317.2	233.5	263.5	263.5	274.1	273.6	299.8	227.1	252.3	252.3	258.7	258.4	280.4	220.2
8000	75	264.4	228.7	295.5	175.0	321.8	116.8	251.7	223.0	280.5	168.9	302.9	110.1	238.0	216.8	264.2	162.4	281.8	102.7
	80	263.5	263.0	295.4	219.8	322.0	162.4	250.9	250.6	280.4	213.7	303.1	155.7	237.6	237.4	264.1	207.3	282.0	148.3
	85	270.1	270.1	295.0	264.3	322.1	207.6	259.9	259.9	279.9	258.2	303.4	201.0	248.6	248.6	263.6	251.6	282.5	193.7
	90	285.1	285.1	294.2	293.7	322.2	252.7	274.1	274.1	279.3	279.0	303.6	246.1	261.6	261.6	263.6	263.4	282.7	238.7
9000	75	269.4	245.0	300.5	184.4	325.2	118.8	256.0	239.1	284.8	178.2	305.1	111.8	241.7	232.8	267.6	171.5	284.3	104.8
	80	268.4	268.1	300.4	234.8	325.4	170.0	255.7	255.5	284.7	228.6	305.4	163.1	242.3	242.1	267.6	222.1	284.5	156.0
	85	279.4	279.4	299.7	284.7	325.7	221.0	268.4	268.4	283.9	278.5	305.9	214.1	256.1	256.1	267.0	266.2	284.7	206.9
	90	294.7	294.7	299.1	298.8	325.8	271.6	282.6	282.6	284.2	284.0	306.1	264.8	268.8	268.8	269.0	269.0	284.4	257.6
10000	75	273.3	261.1	304.4	193.6	327.7	120.8	259.5	255.0	288.0	187.3	307.8	114.0	244.7	244.0	270.1	180.4	286.4	106.9
	80	273.1	272.9	304.3	249.8	328.0	177.7	260.3	260.3	288.1	243.4	307.8	170.8	248.3	248.3	270.2	236.5	286.7	163.8
	85	287.3	287.3	303.3	302.5	328.3	234.3	275.4	275.4	287.0	286.2	307.9	227.3	262.1	262.1	269.1	268.5	286.9	220.4
	90	302.6	302.6	303.8	303.5	328.2	290.4	289.5	289.5	289.7	289.7	307.7	283.6	274.4	274.4	274.5	274.5	286.4	276.4
11000	75	276.5	275.7	307.6	202.8	330.2	122.9	262.3	261.6	290.6	196.3	310.1	116.2	247.0	246.2	272.1	189.3	288.1	109.0
	80	277.6	277.6	307.6	264.5	330.3	185.5	266.1	266.1	290.6	258.0	310.3	178.8	253.4	253.4	272.0	251.0	288.4	171.5
	85	293.9	293.9	306.1	305.3	331.2	247.7	281.3	281.3	289.1	288.4	310.4	241.0	267.1	267.1	270.8	270.4	288.6	233.8
	90	309.2	309.2	309.4	309.4	330.3	309.3	295.0	295.0	295.2	295.2	309.5	302.3	278.5	278.5	278.7	278.7	288.1	286.9

Air Flow cfm	Ent DB (°F)	Ambient Temperature																	
		115						120						125					
		Entering Wet Bulb																	
		61		67		73		61		67		73		61		67		73	
		MBh	SHC	MBh	SHC	MBh	SHC	MBh	SHC	MBh	SHC	MBh	SHC	MBh	SHC	MBh	SHC	MBh	SHC
7000	75	219.7	194.5	243.0	146.4	258.2	93.6	212.8	191.4	234.3	143.0	247.2	89.8	-	-	-	-	236.0	85.9
	80	219.4	219.2	243.0	185.7	258.2	133.4	212.8	212.5	234.3	182.3	247.5	129.7	-	-	-	-	236.2	125.8
	85	228.2	228.2	242.7	224.7	258.5	173.0	222.2	222.2	234.1	221.2	247.8	169.3	-	-	-	-	236.6	165.5
	90	239.8	239.8	242.5	242.2	258.7	212.5	233.0	233.0	234.1	233.9	247.9	208.7	-	-	-	-	236.8	204.9
8000	75	223.7	210.5	246.5	155.4	260.3	95.4	216.5	207.3	237.3	151.9	248.8	91.5	-	-	227.8	148.2	236.9	87.5
	80	224.1	224.0	246.6	200.4	260.5	140.9	217.8	217.8	237.4	196.8	249.1	137.1	-	-	228.0	193.2	237.3	133.1
	85	236.1	236.1	246.2	243.9	260.9	186.2	229.4	229.4	237.1	236.4	249.6	182.4	-	-	227.6	227.1	238.0	178.6
	90	247.4	247.4	247.6	247.6	260.9	231.2	239.5	239.5	239.7	239.7	249.6	227.3	-	-	231.1	231.1	238.0	223.4
9000	75	226.8	224.9	249.1	164.3	261.8	97.2	219.3	218.6	239.4	160.7	249.9	93.3	-	-	229.5	156.9	-	-
	80	230.0	230.0	249.1	214.9	262.2	148.5	223.5	223.5	239.5	211.2	250.3	144.6	-	-	229.6	207.4	-	-
	85	242.4	242.4	248.5	248.1	262.5	199.5	234.9	234.9	238.9	238.5	250.7	195.6	-	-	229.1	228.7	-	-
	90	252.9	252.9	253.0	253.0	262.4	249.9	243.8	243.8	243.9	243.9	251.0	246.1	-	-	233.9	233.9	-	-
10000	75	229.3	228.7	251.0	173.2	263.2	99.2	221.2	220.7	241.0	169.4	250.7	95.1	213.2	212.8	230.8	165.7	-	-
	80	235.2	235.2	250.9	229.2	263.6	156.2	228.2	228.2	240.9	225.5	251.4	152.2	220.9	220.9	230.7	221.7	-	-
	85	247.3	247.3	250.1	249.6	263.9	212.8	239.1	239.1	240.3	240.0	251.7	208.8	230.3	230.3	230.4	230.4	-	-
	90	256.6	256.6	256.7	256.7	263.7	262.7	246.2	246.2	246.3	246.3	251.6	250.6	236.1	236.1	236.2	236.2	-	-
11000	75	230.8	230.4	252.4	182.0	264.0	101.1	222.7	222.3	242.1	178.2	251.2	97.0	214.6	214.1	-	-	-	-
	80	239.4	239.4	252.2	243.6	264.7	163.8	232.0	232.0	242.0	238.9	252.1	159.8	224.1	224.1	-	-	-	-
	85	251.0	251.0	251.7	251.3	264.9	226.1	242.1	242.1	242.2	242.2	252.4	222.0	232.5	232.5	-	-	-	-
	90	258.7	258.7	258.8	258.8	264.6	263.8	248.7	248.7	248.8	248.8	252.1	251.4	237.7	237.7	-	-	-	-

Notes:

1. All capacities shown are gross and have not considered indoor fan heat. To obtain **NET** cooling capacity subtract indoor fan heat. For indoor fan heat formula, refer to appropriate airflow table notes.
2. MBh = Total Gross Capacity
3. SHC = Sensible Heat Capacity
4. *Stands for both downflow and horizontal unit.

Table 24. Gross cooling capacities 12½ tons three phase high efficiency T/YH*150G3,4,W (stage 1)

Air Flow cfm	Ent DB (°F)	Ambient Temperature											
		85						95					
		Entering Wet Bulb											
		61		67		73		61		67		73	
		MBh	SHC	MBh	SHC	MBh	SHC	MBh	SHC	MBh	SHC	MBh	SHC
2000	75	42.0	39.3	45.3	31.2	49.8	15.0	39.2	37.2	42.3	29.4	46.7	13.6
	80	44.2	43.5	46.2	39.1	50.3	29.0	41.5	41.2	43.3	37.1	47.2	27.2
	85	46.9	46.6	48.0	44.3	50.7	38.0	44.1	44.1	45.1	42.1	47.6	36.1
	90	49.6	49.3	50.4	48.1	52.2	44.1	46.9	46.8	47.5	45.8	49.1	42.1
2500	75	43.3	41.5	46.2	33.6	50.4	17.5	40.4	39.2	43.1	31.6	47.1	15.9
	80	45.7	45.7	47.4	41.6	51.1	31.5	42.8	42.8	44.3	39.3	47.9	29.6
	85	48.5	48.5	49.5	46.9	51.8	40.7	45.6	45.6	46.4	44.6	48.6	38.6
	90	51.5	51.5	52.0	50.9	53.5	47.0	48.5	48.5	48.9	48.4	50.3	44.7
3000	75	44.4	43.3	46.9	35.5	50.8	19.5	41.3	40.8	43.7	33.3	47.3	17.7
	80	47.0	47.0	48.4	43.6	51.7	33.6	44.0	44.0	45.1	41.2	48.3	31.6
	85	50.0	50.0	50.6	49.1	52.7	42.9	46.9	46.9	47.4	46.5	49.3	40.6
	90	53.0	53.0	53.3	53.2	54.6	49.3	49.9	49.9	50.1	50.1	51.2	46.9
3500	75	45.2	44.7	47.4	37.0	50.9	21.1	42.0	42.0	44.0	34.6	47.7	19.1
	80	48.1	48.1	49.1	45.2	52.1	35.3	44.8	44.8	45.7	42.6	48.5	33.0
	85	51.2	51.2	51.6	50.8	53.3	44.7	48.1	47.9	48.2	48.0	49.8	42.2
	90	54.3	54.3	54.4	54.4	55.4	51.3	50.6	50.6	51.0	51.0	51.9	48.6
4000	75	45.8	45.6	47.6	38.0	51.3	22.3	42.4	42.4	44.3	35.4	48.4	20.0
	80	48.9	48.9	49.6	46.3	52.2	36.6	45.5	45.5	46.0	43.5	48.7	34.1
	85	52.1	52.1	52.3	52.1	53.7	46.1	48.6	48.6	48.7	48.7	50.0	43.4
	90	54.8	54.8	55.2	55.2	56.0	52.8	51.2	51.2	51.7	51.7	52.3	49.9
4375	75	46.1	46.0	47.6	38.5	51.9	22.8	42.6	42.6	44.6	35.8	48.7	20.5
	80	49.3	49.3	49.8	46.9	52.4	37.2	45.8	45.8	46.1	43.9	48.9	34.6
	85	52.3	52.3	52.6	52.6	53.9	46.8	48.8	48.8	49.0	49.0	50.3	44.0
	90	55.2	55.2	55.7	55.7	56.3	53.6	52.0	52.0	52.1	52.1	52.5	50.6

Notes:

1. All capacities shown are gross and have not considered indoor fan heat. To obtain NET cooling capacity subtract indoor fan heat. For indoor fan heat formula, refer to appropriate airflow table notes.
2. MBh = Total Gross Capacity
3. SHC = Sensible Heat Capacity
4. *Indicates both downflow and horizontal units.

Table 25. Gross cooling capacities 12½ tons three phase high efficiency T/YH*150G3,4,W (stage 2)

Air Flow cfm	Ent DB (°F)	Ambient Temperature											
		85						95					
		Entering Wet Bulb											
		61		67		73		61		67		73	
		MBh	SHC	MBh	SHC	MBh	SHC	MBh	SHC	MBh	SHC	MBh	SHC
2000	75	87.1	69.1	97.7	56.8	108.4	33.8	83.2	66.7	92.6	54.8	102.7	32.4
	80	88.4	76.3	98.3	68.1	110.1	52.4	84.5	73.5	93.8	65.7	104.8	50.5
	85	91.0	81.9	99.1	76.1	110.6	65.0	87.1	78.9	94.7	73.5	105.5	62.7
	90	94.6	86.6	101.5	82.3	111.0	73.9	90.6	83.5	97.0	79.4	106.0	71.4
2500	75	92.4	75.4	101.4	62.0	112.8	37.9	88.1	72.7	96.9	59.7	105.9	36.2
	80	94.3	83.2	103.5	74.1	114.0	57.5	90.1	80.3	98.7	71.6	109.8	55.3
	85	97.5	89.5	105.0	83.0	115.8	71.0	93.3	86.3	100.2	80.1	110.4	68.5
	90	101.5	94.7	107.9	89.7	116.8	80.7	97.3	91.3	103.2	86.6	111.5	77.9
3000	75	96.8	80.9	107.7	66.4	114.3	41.2	92.3	78.0	102.4	64.0	113.2	39.3
	80	99.4	89.5	107.8	79.5	118.5	61.9	94.9	86.3	102.7	76.7	114.1	59.5
	85	103.1	96.3	110.0	89.1	120.1	76.2	98.6	92.9	105.0	86.0	114.4	73.5
	90	107.6	102.0	113.5	96.4	121.8	86.7	103.1	98.4	108.5	93.1	116.2	83.7
3500	75	100.3	85.7	110.4	70.2	120.2	43.8	95.6	82.5	104.8	67.5	115.7	41.7
	80	103.6	95.0	111.4	84.2	123.3	65.5	98.9	91.6	106.0	81.1	117.2	62.9
	85	107.9	102.4	114.2	94.5	123.6	80.8	103.2	98.8	108.9	91.1	117.7	77.8
	90	112.9	108.7	118.3	102.4	126.0	92.0	108.1	104.9	112.9	98.9	120.1	88.7
4000	75	103.1	89.8	112.3	73.3	121.4	45.7	98.0	86.4	106.5	70.4	116.8	43.3
	80	107.0	99.8	114.1	88.1	125.2	68.5	102.0	96.2	108.4	84.9	118.8	65.7
	85	111.9	107.9	117.5	99.1	126.3	84.6	106.9	104.0	112.0	95.6	120.0	81.5
	90	117.4	114.6	122.2	107.7	129.3	96.5	112.3	110.6	116.6	103.9	123.2	93.1
4375	75	104.6	92.4	113.2	75.1	122.6	46.7	99.3	88.8	107.1	72.0	117.4	44.1
	80	109.0	103.0	115.5	90.6	126.1	70.3	103.8	99.1	109.7	87.2	119.4	67.3
	85	114.3	111.5	119.5	102.2	127.7	87.1	109.1	107.4	113.7	98.5	121.3	83.7
	90	120.1	118.6	124.6	111.2	131.3	99.5	114.8	114.4	118.8	107.3	124.9	95.9

Notes:

1. All capacities shown are gross and have not considered indoor fan heat. To obtain NET cooling capacity subtract indoor fan heat. For indoor fan heat formula, refer to appropriate airflow table notes.
2. MBh = Total Gross Capacity
3. SHC = Sensible Heat Capacity
4. *Indicates both downflow and horizontal units.

Table 26. Gross cooling capacities 12½ tons three phase high efficiency T/YH*150G3,4,W (full load)

Air Flow cfm	Ent DB (°F)	Ambient Temperature																	
		85						95						105					
		Entering Wet Bulb																	
		61		67		73		61		67		73		61		67		73	
		MBh	SHC	MBh	SHC	MBh	SHC	MBh	SHC	MBh	SHC	MBh	SHC	MBh	SHC	MBh	SHC	MBh	SHC
2500	75	125.0	96.9	138.0	75.5	153.6	38.3	118.3	92.7	130.4	72.3	145.1	36.2	111.1	88.1	122.3	68.7	136.2	33.8
	80	127.7	109.0	139.6	94.4	154.2	68.6	121.0	104.1	132.0	90.4	145.7	65.6	113.8	98.9	123.9	86.0	136.7	62.2
	85	132.0	118.4	141.2	108.0	154.7	89.5	125.1	113.0	133.5	103.4	146.2	85.7	117.8	107.3	125.5	98.4	137.2	81.5
	90	137.2	126.3	144.6	118.4	155.2	104.6	130.0	120.5	136.8	113.3	146.7	100.1	122.5	114.3	128.6	107.7	137.8	95.3
3000	75	131.2	104.5	143.4	82.5	158.2	44.6	124.1	99.9	135.4	78.9	149.3	42.1	116.5	94.9	126.9	74.9	140.0	39.3
	80	134.4	117.1	145.5	102.0	159.3	75.6	127.3	111.8	137.5	97.6	150.4	72.2	119.7	106.2	129.0	92.9	141.0	68.4
	85	139.1	127.0	147.6	116.2	160.4	97.2	131.8	121.2	139.6	111.1	151.4	93.0	124.1	115.1	131.1	105.7	142.1	88.4
	90	144.6	135.3	151.5	127.1	161.4	112.8	137.1	129.1	143.3	121.5	152.5	107.9	129.1	122.5	134.6	115.6	143.1	102.7
3500	75	136.7	111.4	148.1	88.8	162.1	50.2	129.2	106.4	142.1	84.8	152.8	47.4	121.2	101.0	133.1	80.4	143.1	44.2
	80	140.5	124.5	150.7	108.9	163.7	82.0	132.9	118.8	142.3	104.1	154.4	78.2	124.9	112.8	133.4	99.0	144.6	74.0
	85	145.6	134.9	153.4	123.6	165.3	104.2	137.8	128.7	144.9	118.2	156.0	99.5	129.7	122.2	136.0	112.4	146.2	94.6
	90	151.4	143.6	157.6	135.0	166.9	120.3	143.4	137.0	149.0	129.0	157.6	115.1	135.0	130.0	140.0	122.7	147.8	109.5
4000	75	141.5	117.6	154.6	94.4	165.3	55.2	133.5	112.2	145.6	90.0	155.6	51.9	125.1	106.4	136.1	85.3	145.4	48.3
	80	145.8	131.3	155.2	115.2	167.4	87.7	137.8	125.2	146.4	110.0	157.7	83.4	129.4	118.8	137.0	104.5	147.5	78.9
	85	151.3	142.1	158.4	130.4	169.6	110.5	143.2	135.5	149.5	124.6	159.8	105.5	134.6	128.6	140.2	118.4	149.6	100.1
	90	157.4	151.2	163.1	142.3	171.7	127.2	149.1	144.2	154.0	135.9	161.9	121.5	140.2	136.9	144.6	129.2	151.7	115.5
4500	75	145.6	123.2	157.7	99.4	173.0	59.4	137.2	117.4	148.3	94.6	162.6	55.8	128.4	111.2	138.4	89.4	151.7	51.8
	80	150.4	137.3	159.0	120.8	173.0	92.7	142.0	130.9	149.7	115.2	162.7	88.1	133.2	124.1	140.0	109.3	152.0	83.1
	85	156.3	148.7	162.7	136.6	173.1	116.1	147.8	141.7	153.4	130.3	162.9	110.7	138.8	134.4	143.7	123.7	152.3	105.0
	90	162.8	158.2	167.8	148.9	175.8	133.4	154.0	150.8	158.4	142.1	165.6	127.3	144.7	143.1	148.5	135.0	155.0	120.9
5000	75	149.0	128.0	160.1	103.7	174.5	63.1	140.2	121.8	150.2	98.5	163.6	59.0	130.9	115.3	139.9	92.9	152.3	54.6
	80	154.3	142.8	162.1	125.7	175.2	97.0	145.5	135.9	152.4	119.7	164.5	92.0	136.2	128.7	142.2	113.4	153.3	86.7
	85	160.6	154.5	166.3	142.0	175.9	121.1	151.6	147.2	156.6	135.4	165.3	115.3	142.2	139.5	146.5	128.4	154.3	109.1
	90	167.4	164.5	171.8	154.8	179.1	138.9	158.2	156.7	162.0	147.6	168.5	132.4	148.5	148.5	151.7	140.1	157.5	125.6
5500	75	151.6	132.3	161.8	107.3	175.2	66.0	142.4	125.7	151.5	101.7	164.0	61.5	132.7	118.7	140.8	95.8	152.8	56.8
	80	157.5	147.5	164.5	129.9	176.6	100.7	148.2	140.3	154.3	123.6	165.5	95.3	138.6	132.7	143.8	116.8	153.9	89.5
	85	164.2	159.7	169.2	146.8	178.0	125.4	154.8	152.0	159.1	139.8	167.0	119.2	145.0	143.9	148.5	132.4	155.6	112.6
	90	171.3	170.1	175.1	160.0	181.8	143.7	161.7	161.7	164.9	152.5	170.7	136.9	151.6	151.6	154.2	144.6	159.3	129.7
6000	75	153.6	135.8	162.8	110.2	175.3	68.2	143.9	128.8	152.1	104.2	164.5	63.4	133.8	121.5	140.9	97.9	153.2	58.2
	80	160.0	151.6	166.1	133.5	177.4	103.7	150.3	144.0	155.6	126.7	165.8	97.9	140.2	136.0	144.6	119.6	154.5	91.7
	85	167.1	164.3	171.4	150.9	179.4	129.0	157.3	156.1	160.9	143.5	168.0	122.4	147.0	147.0	149.9	135.7	156.2	115.5
	90	174.5	174.5	177.7	164.6	183.7	147.9	164.4	164.4	167.1	156.7	172.3	140.6	154.0	154.0	155.9	148.4	160.4	133.1

Table 26. Gross cooling capacities 12½ tons three phase high efficiency T/YH*150G3,4,W (full load)

Air Flow cfm	Ent DB (°F)	Ambient Temperature																	
		115						120						125					
		Entering Wet Bulb																	
		61		67		73		61		67		73		61		67		73	
		MBh	SHC	MBh	SHC	MBh	SHC	MBh	SHC	MBh	SHC	MBh	SHC	MBh	SHC	MBh	SHC	MBh	SHC
2500	75	103.5	83.2	113.8	64.9	126.9	31.1	99.5	80.7	109.4	62.8	122.0	29.6	95.5	78.0	104.9	60.6	117.0	28.0
	80	106.2	93.3	115.4	81.4	127.4	58.5	102.2	90.4	110.9	78.9	122.5	56.5	98.1	87.5	106.4	76.4	117.5	54.4
	85	110.0	101.2	116.9	93.0	127.9	77.0	105.9	98.1	112.5	90.3	123.0	74.7	101.8	94.8	107.9	87.4	118.0	72.2
	90	114.5	107.9	119.9	101.9	128.4	90.2	110.3	104.5	115.4	98.8	123.5	87.5	106.0	101.1	110.8	95.7	118.5	84.7
3000	75	108.5	89.6	118.0	70.6	130.2	36.2	104.3	86.8	113.3	68.4	125.1	34.5	100.0	84.0	108.6	66.0	120.0	32.7
	80	111.7	100.3	120.0	87.8	131.2	64.3	107.5	97.2	115.4	85.1	126.2	62.1	103.2	94.0	110.7	82.4	121.0	59.9
	85	115.9	108.6	122.1	100.0	132.3	83.5	111.6	105.3	117.5	97.0	127.2	80.9	107.3	101.8	112.7	94.0	122.0	78.3
	90	120.7	115.7	125.5	109.3	133.3	97.2	116.3	112.1	120.8	106.1	128.2	94.3	111.8	108.5	116.0	102.7	123.1	91.3
3500	75	112.7	95.3	123.6	75.8	132.9	40.6	108.3	92.4	118.7	73.3	127.6	38.7	103.8	89.3	113.7	70.8	122.2	36.8
	80	116.4	106.5	124.0	93.5	134.4	69.5	112.0	103.2	119.2	90.7	129.1	67.1	107.5	99.8	114.2	87.7	123.8	64.7
	85	121.1	115.3	126.6	106.3	136.0	89.3	116.6	111.8	121.8	103.1	130.7	86.5	112.0	108.2	116.8	99.8	125.3	83.7
	90	126.2	122.8	130.5	116.1	137.6	103.5	121.6	119.0	125.5	112.6	132.3	100.4	116.9	115.2	120.5	109.1	126.9	97.3
4000	75	116.3	100.4	126.2	80.2	134.8	44.4	111.7	97.2	121.0	77.5	129.3	42.3	107.0	94.0	115.8	74.8	123.7	40.1
	80	120.5	112.1	127.3	98.6	136.9	74.0	115.9	108.6	122.2	95.5	131.4	71.4	111.2	105.0	117.1	92.4	125.8	68.8
	85	125.6	121.4	130.4	111.9	139.0	94.4	120.9	117.6	125.4	108.5	133.5	91.5	116.1	113.8	120.2	105.1	127.9	88.4
	90	131.0	129.2	134.7	122.1	141.1	109.2	126.2	125.3	129.5	118.5	135.6	105.9	121.3	121.2	124.3	114.8	130.0	102.5
4500	75	119.1	104.7	128.0	84.0	140.3	47.5	114.3	101.4	122.7	81.1	134.5	45.2	109.4	97.9	117.3	78.2	128.6	42.8
	80	123.9	117.0	129.8	103.0	140.8	77.8	119.0	113.3	124.5	99.7	135.0	75.1	114.1	109.6	119.2	96.4	129.2	72.2
	85	129.3	126.7	133.5	116.8	141.3	98.9	124.4	122.8	128.2	113.3	135.6	95.7	119.4	118.8	122.8	109.6	129.8	92.5
	90	135.1	135.0	138.1	127.6	143.9	114.2	130.0	130.0	132.8	123.7	138.2	110.7	124.9	124.9	127.4	119.8	132.4	107.1
5000	75	121.2	108.4	129.2	87.1	140.6	49.9	116.2	104.9	123.6	84.0	134.5	47.4	111.1	101.2	118.0	80.9	129.0	44.9
	80	126.5	121.2	131.6	106.7	141.7	81.0	121.5	117.4	126.2	103.3	135.7	78.0	116.4	113.4	120.6	99.7	129.6	75.0
	85	132.4	131.4	135.8	121.1	142.8	102.7	127.3	127.3	130.4	117.3	136.9	99.3	122.1	122.1	124.8	113.5	130.9	95.9
	90	138.4	138.4	140.9	132.3	146.0	118.5	133.2	133.2	135.4	128.3	140.1	114.8	127.9	127.9	129.7	124.1	134.1	111.1
5500	75	122.6	111.5	129.6	89.5	141.0	51.7	117.4	107.7	123.9	86.3	134.8	49.0	112.1	103.9	118.0	82.9	130.0	46.2
	80	128.4	124.8	132.7	109.8	141.9	83.5	123.2	120.7	127.1	106.1	136.2	80.3	117.9	116.6	121.3	102.4	130.7	77.1
	85	134.7	134.7	137.5	124.7	143.7	105.8	129.4	129.4	131.8	120.7	137.6	102.2	124.0	124.0	126.0	116.7	131.4	98.6
	90	141.1	141.1	143.0	136.4	147.4	122.2	135.7	135.7	137.2	132.1	141.3	118.3	130.1	130.1	131.4	127.8	135.1	114.3
6000	75	123.3	113.8	130.0	91.3	142.0	52.7	117.9	109.9	125.0	87.8	135.3	49.9	112.3	105.8	119.0	84.3	130.2	46.9
	80	129.7	127.7	133.2	112.2	143.0	85.3	124.2	123.4	127.3	108.3	137.0	81.9	118.7	118.7	124.0	104.4	131.6	78.5
	85	136.4	136.4	138.4	127.6	143.8	108.2	130.8	130.8	132.5	123.5	139.0	104.5	125.2	125.2	126.5	119.2	133.0	100.6
	90	143.0	143.0	144.3	139.8	148.1	125.2	137.4	137.4	138.4	135.3	141.8	121.1	131.6	131.6	132.3	130.8	135.3	116.9

Notes:

1. All capacities shown are gross and have not considered indoor fan heat. To obtain NET cooling capacity subtract indoor fan heat. For indoor fan heat formula, refer to appropriate airflow table notes.
2. MBh = Total Gross Capacity
3. SHC = Sensible Heat Capacity
4. *Indicates both downflow and horizontal units.

Table 27. Gross cooling capacities 12½ tons three phase dehumidification (hot gas reheat) option high efficiency T/YHD150G3,4,W (Digit 22 = B)

Air Flow cfm	Ent DB (°F)	Ambient Temperature																	
		85						95						105					
		Entering Wet Bulb																	
		61		67		73		61		67		73		61		67		73	
		MBh	SHC	MBh	SHC	MBh	SHC	MBh	SHC	MBh	SHC	MBh	SHC	MBh	SHC	MBh	SHC	MBh	SHC
2500[a]	75	119.6	86.9	135.0	60.0	154.5	54.1	112.4	82.4	127.1	56.5	145.9	51.1	104.7	77.6	118.6	52.7	136.8	47.9
	80	121.1	102.6	134.0	82.6	151.3	52.9	114.0	97.4	126.2	78.4	142.8	50.0	106.3	92.0	117.9	74.0	133.7	46.8
	85	123.7	114.7	134.3	101.6	149.2	75.1	116.7	108.9	126.6	96.8	140.8	71.4	109.2	102.8	118.4	91.7	131.9	67.4
	90	127.5	123.2	135.8	116.9	148.3	97.4	120.6	116.7	128.2	111.5	140.0	93.0	113.2	110.0	120.1	105.8	131.2	88.4
3250[a]	75	129.1	96.7	143.2	68.4	161.5	56.5	121.5	91.9	134.9	64.6	152.5	53.4	113.3	86.8	126.0	60.5	142.9	50.0
	80	131.4	113.6	143.2	92.1	159.1	57.4	123.9	108.1	134.9	87.7	150.2	54.0	115.8	102.4	126.1	83.0	140.7	50.4
	85	134.9	126.9	144.3	112.3	157.9	84.4	127.5	120.8	136.2	107.2	149.1	80.4	119.5	114.4	127.5	101.9	139.7	76.2
	90	139.7	136.5	146.7	128.8	157.9	107.9	132.3	129.8	138.6	123.1	149.2	103.2	124.4	122.8	130.0	117.2	139.9	98.3
4000	75	137.1	105.6	149.9	75.8	167.0	58.4	129.0	100.4	141.1	71.7	157.4	55.1	120.3	95.0	131.7	67.4	147.4	51.6
	80	140.2	123.6	150.7	100.7	165.4	64.5	132.2	117.8	142.0	96.0	156.0	60.9	123.7	111.8	132.7	91.0	146.1	57.0
	85	144.6	138.0	152.7	122.0	165.1	92.7	136.7	131.6	144.1	116.7	155.8	88.5	128.3	124.9	135.0	111.1	145.9	83.9
	90	150.2	148.8	156.0	139.7	166.0	117.4	142.4	141.8	147.5	133.7	156.8	112.4	134.0	134.0	138.4	127.5	147.0	107.2
4500	75	141.5	110.9	153.5	80.1	169.7	59.4	133.1	105.5	144.3	75.9	159.9	56.0	124.1	100.0	134.7	71.3	149.5	52.3
	80	145.2	129.7	154.9	105.8	168.8	68.7	136.9	123.7	145.8	100.9	159.0	64.9	128.1	117.5	136.3	95.8	148.8	60.8
	85	150.2	144.9	157.5	127.9	169.0	97.7	142.0	138.3	148.6	122.4	159.4	93.2	133.2	131.4	139.1	116.6	149.2	88.5
	90	156.3	156.3	161.3	146.4	170.5	123.1	148.2	148.2	152.5	140.3	161.0	118.0	139.6	139.6	143.1	133.8	150.9	112.6
5000	75	145.2	115.7	156.3	84.0	171.8	60.1	136.5	110.2	146.9	79.6	161.6	56.6	127.2	104.5	137.0	74.9	151.0	52.8
	80	149.5	135.3	158.3	110.5	171.4	72.5	140.9	129.2	149.0	105.4	161.4	68.4	131.7	122.8	139.1	100.1	150.8	64.2
	85	155.0	151.3	161.5	133.4	172.2	102.3	146.5	144.5	152.3	127.7	162.3	97.6	137.5	137.5	142.5	121.7	151.8	92.7
	90	161.8	161.8	165.9	152.7	174.3	128.4	153.4	153.4	156.8	146.3	164.4	123.1	144.4	144.4	147.1	139.7	154.1	117.6
5500	75	148.2	120.1	158.5	87.5	173.1	60.6	139.2	114.4	148.8	82.9	162.7	56.9	129.6	108.5	138.5	78.0	151.7	53.1
	80	153.1	140.5	161.1	114.8	173.3	75.8	144.2	134.2	151.4	109.5	163.0	71.6	134.7	127.6	141.3	104.0	152.1	67.1
	85	159.2	157.2	164.8	138.4	174.7	106.3	150.4	150.3	155.3	132.5	164.5	101.5	141.0	141.0	145.3	126.3	153.7	96.4
	90	166.5	166.5	169.8	158.5	177.3	133.3	157.8	157.8	160.4	151.9	167.2	127.8	148.6	148.6	150.4	145.1	156.6	122.0
6000	75	150.5	124.1	160.0	90.5	173.7	60.8	141.2	118.2	150.0	85.7	163.0	57.1	131.3	112.1	139.4	80.6	151.7	53.1
	80	156.0	145.2	163.1	118.6	174.5	78.6	146.8	138.7	153.2	113.1	163.9	74.2	137.0	131.9	142.7	107.4	152.7	69.6
	85	162.7	162.7	167.5	143.0	176.5	110.0	153.6	153.6	157.6	136.9	166.0	104.9	143.9	143.9	147.3	130.5	154.9	99.6
	90	170.6	170.6	173.0	163.8	179.7	137.7	161.5	161.5	163.3	157.1	169.3	132.0	152.0	152.0	153.0	150.1	158.3	126.1

Table 27. Gross cooling capacities 12½ tons three phase dehumidification (hot gas reheat) option high efficiency T/YHD150G3,4,W (Digit 22 = B)

Air Flow cfm	Ent DB (°F)	Ambient Temperature																	
		115						120						125					
		Entering Wet Bulb																	
		61		67		73		61		67		73		61		67		73	
		MBh	SHC	MBh	SHC	MBh	SHC	MBh	SHC	MBh	SHC	MBh	SHC	MBh	SHC	MBh	SHC	MBh	SHC
2500[a]	75	96.4	72.5	109.7	48.7	127.1	44.5	92.1	69.8	105.0	46.6	122.1	42.7	87.7	67.2	100.2	44.4	116.9	40.9
	80	98.2	86.3	109.0	69.4	124.1	43.5	93.9	83.3	104.4	66.9	119.2	41.7	89.5	80.3	99.6	64.4	114.0	39.9
	85	101.1	96.4	109.6	86.4	122.4	63.2	96.9	93.2	105.0	83.7	117.5	60.9	92.5	89.8	100.3	80.9	112.4	58.7
	90	105.3	103.0	111.4	99.9	121.8	83.5	101.1	99.4	106.9	96.9	116.9	81.0	96.8	95.8	102.2	93.7	111.9	78.4
3250[a]	75	104.6	81.4	116.5	56.2	132.7	46.5	100.0	78.7	111.6	54.0	127.5	44.6	95.3	75.8	106.6	51.7	122.1	42.7
	80	107.2	96.4	116.8	78.1	130.7	46.5	102.7	93.3	111.9	75.5	125.4	44.5	98.0	90.2	106.9	72.9	120.1	42.3
	85	111.0	107.7	118.3	96.3	129.8	71.6	106.5	104.3	113.4	93.4	124.6	69.3	101.9	100.9	108.5	90.5	119.3	66.9
	90	116.0	115.5	120.9	111.0	130.1	93.2	111.6	111.6	116.2	107.8	125.0	90.5	107.1	107.1	111.3	104.5	119.7	87.8
4000	75	111.1	89.4	121.8	62.8	136.8	47.9	106.3	86.5	116.7	60.4	131.3	46.0	101.4	83.5	111.4	57.9	125.7	44.0
	80	114.6	105.5	123.0	85.8	135.6	52.8	109.9	102.3	117.9	83.1	130.1	50.6	105.0	99.0	112.7	80.3	124.6	48.4
	85	119.3	118.0	125.3	105.2	135.6	79.1	114.6	114.5	120.3	102.2	130.2	76.6	109.8	109.8	115.1	99.1	124.7	74.0
	90	125.2	125.2	128.8	121.0	136.7	101.8	120.5	120.5	123.8	117.7	131.4	99.0	115.8	115.8	118.7	114.3	125.9	96.1
4500	75	114.6	94.1	124.5	66.6	138.6	48.5	109.7	91.1	119.2	64.1	133.0	46.5	104.6	88.1	113.8	61.5	127.2	44.5
	80	118.7	111.0	126.2	90.4	138.0	56.4	113.8	107.7	121.0	87.6	132.4	54.2	108.8	104.3	115.6	84.7	126.7	51.8
	85	123.9	123.9	129.1	110.6	138.6	83.5	119.1	119.1	123.9	107.4	133.0	80.9	114.1	114.1	118.6	104.3	127.3	78.3
	90	130.4	130.4	133.2	127.1	140.3	107.0	125.6	125.6	128.1	123.7	134.8	104.1	120.7	120.7	122.8	120.2	129.2	101.1
5000	75	117.4	98.4	126.5	69.9	139.8	48.9	112.3	95.3	121.0	67.4	134.0	46.9	107.1	92.2	115.4	64.7	128.0	44.8
	80	122.1	116.1	128.8	94.5	139.7	59.6	117.0	112.7	123.4	91.6	134.0	57.2	111.8	109.2	117.8	88.6	128.1	54.8
	85	127.9	127.9	132.2	115.5	140.8	87.5	122.9	122.9	126.9	112.3	135.1	84.8	117.8	117.8	121.4	109.0	129.3	82.0
	90	134.9	134.9	136.9	132.8	143.2	111.7	130.0	130.0	131.6	129.3	137.5	108.7	125.0	125.0	126.2	125.7	131.8	105.7
5500	75	119.5	102.3	127.7	72.8	140.2	49.1	114.3	99.1	122.1	70.2	134.2	47.0	108.9	95.8	116.4	67.4	128.2	44.9
	80	124.7	120.7	130.6	98.2	140.7	62.3	119.5	117.2	125.0	95.2	134.8	59.9	114.2	113.6	119.4	92.1	128.8	57.4
	85	131.1	131.1	134.7	119.9	142.4	91.0	126.0	126.0	129.2	116.6	136.6	88.2	120.7	120.7	123.5	113.2	130.6	85.4
	90	138.5	138.5	139.9	138.1	145.4	116.0	133.1	133.1	134.5	134.4	139.6	112.9	128.9	128.9	128.9	128.9	133.6	109.8
6000	75	120.9	105.7	128.3	75.3	139.9	49.0	115.5	102.4	122.5	72.5	133.8	46.8	110.0	99.0	116.7	69.7	127.6	44.7
	80	126.7	124.9	131.7	101.4	141.0	64.6	121.4	121.3	126.0	98.3	135.0	62.1	115.9	115.9	120.2	95.2	128.8	59.5
	85	133.7	133.7	136.4	123.9	143.3	94.1	128.4	128.4	130.7	120.5	137.3	91.2	123.0	123.0	125.0	117.1	131.2	88.2
	90	142.2	142.2	142.2	142.2	146.8	119.9	136.6	136.6	136.6	136.6	140.9	116.7	130.9	130.9	130.9	130.9	134.8	113.4

Notes:

1. All capacities shown are gross and have not considered indoor fan heat. To obtain NET cooling capacity subtract indoor fan heat. For indoor fan heat formula, refer to appropriate airflow table notes.
2. MBh = Total Gross Capacity
3. SHC = Sensible Heat Capacity

(a) For 2500 and 3250 cfm-Unit applications below 320 cfm/ton are only applicable to Constant Volume THD models without electric heat and YHD models equipped with modulating gas heat. See below for restrictions:
- Electric heaters on applications below 320 cfm/ton.
- Dehumidification (Hot Gas Reheat) with Frostat and Crankcage heaters are required on applications below 320 cfm/ton.
- Multi-speed or single zone VAV applications are capable of running below 320 cfm/ton during low speed airflow operation, but "full" airflow must be set to 320 cfm/ton or higher.

Table 28. Gross cooling capacities 15 tons three phase high efficiency T/YH*180G3,4,W (stage 1)

Air Flow cfm	Ent DB (°F)	Ambient Temperature											
		85						95					
		Entering Wet Bulb											
		61		67		73		61		67		73	
		MBh	SHC	MBh	SHC	MBh	SHC	MBh	SHC	MBh	SHC	MBh	SHC
2400	75	54.8	51.5	59.2	40.6	65.3	18.6	51.8	49.1	56.0	38.5	60.9	17.0
	80	57.4	56.8	60.0	50.8	65.5	37.2	54.3	54.2	56.8	48.5	62.1	35.2
	85	60.3	60.3	61.9	57.4	65.5	48.8	57.1	57.1	58.6	54.8	62.1	46.6
	90	63.3	63.3	64.3	61.8	66.8	56.5	60.1	60.1	61.0	59.1	63.3	54.1
3000	75	56.6	54.6	60.5	44.0	66.3	22.4	53.4	52.0	57.1	41.7	61.6	20.5
	80	59.5	59.5	61.7	54.3	66.7	40.9	56.2	56.2	58.2	51.8	63.1	38.7
	85	62.6	62.6	63.8	60.9	67.1	52.6	59.3	59.3	60.4	58.2	63.4	50.2
	90	65.7	65.7	66.4	65.5	68.6	60.4	62.3	62.3	62.9	62.6	64.9	57.7
3600	75	58.1	57.2	61.5	46.8	66.9	25.5	54.7	54.3	57.9	44.3	62.0	23.4
	80	61.2	61.2	63.0	57.2	67.5	44.0	57.8	57.8	59.4	54.4	63.8	41.6
	85	64.5	64.5	65.4	63.9	68.2	55.8	61.0	61.0	61.8	60.9	64.4	53.1
	90	67.9	67.9	68.3	68.3	70.0	63.7	64.3	64.3	64.6	64.6	66.2	60.7
4200	75	59.3	59.1	62.2	49.1	67.0	28.1	55.7	55.7	58.4	46.3	62.1	25.7
	80	62.6	62.6	64.0	59.5	68.1	46.6	59.0	59.0	60.2	56.4	64.1	43.9
	85	66.2	66.2	66.7	66.3	69.1	58.4	62.5	62.5	62.9	62.9	65.1	55.5
	90	69.7	69.7	69.7	69.7	71.2	66.3	64.6	64.6	65.9	65.9	67.2	63.2
4800	75	60.1	60.1	62.5	50.7	67.1	30.0	56.4	56.4	58.6	47.7	62.7	27.4
	80	63.7	63.7	64.7	61.1	68.3	48.5	59.9	59.9	60.7	57.9	64.1	45.6
	85	67.5	67.5	67.6	67.6	69.6	60.4	63.6	63.6	63.6	63.6	65.5	57.3
	90	69.8	69.8	70.9	70.9	72.0	68.5	65.9	65.9	66.8	66.8	67.8	65.1
5250	75	60.5	60.5	62.5	51.6	67.2	31.1	56.6	56.6	58.8	48.4	63.0	28.4
	80	64.3	64.3	65.0	62.0	68.5	49.6	60.4	60.4	60.9	58.6	64.1	46.5
	85	67.8	67.8	68.1	68.1	69.8	61.6	63.8	63.8	64.0	64.0	65.5	58.2
	90	70.7	70.7	71.5	71.5	72.4	69.6	66.7	66.7	67.4	67.4	68.0	66.1

Notes:

1. All capacities shown are gross and have not considered indoor fan heat. To obtain NET cooling capacity subtract indoor fan heat. For indoor fan heat formula, refer to appropriate airflow table notes.
2. MBh = Total Gross Capacity
3. SHC = Sensible Heat Capacity
4. *Indicates both downflow and horizontal units.

Table 29. Gross cooling capacities 15 tons three phase high efficiency T/YH*180G3,4,W (stage 2)

Air Flow cfm[a]	Ent DB (°F)	Ambient Temperature											
		85						95					
		Entering Wet Bulb											
		61		67		73		61		67		73	
		MBh	SHC	MBh	SHC	MBh	SHC	MBh	SHC	MBh	SHC	MBh	SHC
2400	75	102.0	81.9	111.7	65.6	123.0	36.1	96.8	78.4	105.8	62.6	116.0	33.6
	80	104.0	90.7	113.0	79.9	123.8	59.7	98.9	86.9	107.3	76.5	117.7	56.7
	85	107.1	97.4	114.3	89.8	124.6	75.5	102.0	93.4	108.8	86.1	118.5	72.1
	90	111.0	102.8	117.0	97.1	125.4	86.5	105.8	98.6	111.5	93.2	119.3	82.9
3000	75	107.2	88.8	117.9	71.7	126.6	41.1	101.7	85.0	111.7	68.3	120.0	38.3
	80	109.8	98.2	118.0	86.6	128.0	65.6	104.4	94.1	112.0	82.9	121.5	62.3
	85	113.4	105.4	120.0	97.2	129.4	82.2	108.0	101.1	114.1	93.2	123.0	78.5
	90	117.8	111.3	123.2	105.1	130.8	93.9	112.3	106.7	117.3	100.8	124.5	89.9
3600	75	111.5	94.8	121.2	76.7	133.1	45.2	105.7	90.6	114.7	73.0	125.9	42.1
	80	114.7	104.8	122.0	92.5	133.2	70.6	109.0	100.4	115.7	88.4	126.2	67.0
	85	118.9	112.5	124.7	103.7	133.3	87.9	113.2	107.9	118.5	99.3	126.5	84.0
	90	123.7	118.9	128.4	112.1	135.3	100.3	117.8	114.0	122.2	107.5	128.7	96.0
4200	75	114.9	99.8	123.6	80.9	134.5	48.4	108.8	95.3	116.8	76.9	127.0	44.9
	80	118.8	110.4	125.2	97.4	135.4	74.7	112.7	105.7	118.6	93.0	128.1	70.7
	85	123.5	118.7	128.5	109.2	136.3	92.8	117.4	113.7	122.0	104.6	129.2	88.5
	90	128.6	125.5	132.8	118.2	139.0	105.7	122.5	120.3	126.3	113.2	132.0	101.1
4800	75	117.4	103.9	125.1	84.1	135.0	50.6	111.0	99.1	117.9	79.7	128.0	46.8
	80	121.9	115.2	127.5	101.4	136.7	77.8	115.6	110.1	120.6	96.7	129.1	73.5
	85	127.1	123.9	131.5	113.9	138.4	96.7	120.8	118.6	124.6	108.8	131.0	92.0
	90	132.7	131.1	136.3	123.3	141.8	110.3	126.3	125.6	129.4	118.1	134.5	105.3
5250	75	118.7	106.3	125.6	85.9	135.5	51.7	112.0	101.3	118.2	81.3	129.0	47.6
	80	123.7	118.1	128.7	103.7	137.1	79.5	117.1	112.7	121.5	98.8	129.3	75.0
	85	129.3	127.3	133.1	116.7	139.4	99.0	122.7	121.7	126.0	111.4	131.8	94.1
	90	135.2	134.8	138.3	126.6	143.3	113.0	128.5	128.5	131.2	121.1	135.7	107.9

Notes:

1. All capacities shown are gross and have not considered indoor fan heat. To obtain NET cooling capacity subtract indoor fan heat. For indoor fan heat formula, refer to appropriate airflow table notes.
2. MBh = Total Gross Capacity
3. SHC = Sensible Heat Capacity
4. *Indicates both downflow and horizontal units.

(a) For 2400, 3000, 3600, and 4200 cfm-Unit applications below 320 cfm/ton are only applicable to Constant Volume THD models without electric heat and YHD models equipped with modulating gas heat. See below for restrictions:
- Electric heaters on applications below 320 cfm/ton.
- Frostat and Crankcase heaters are required on applications below 320 cfm/ton.
- Multi-speed, single zone VAV or multi-zone VAV applications are capable of running below 320 cfm/ton during low speed airflow operation, but "full" airflow must be set to 320 cfm/ton or higher.

Table 30. Gross cooling capacities 15 tons three phase high efficiency T/YH*180G3,4,W (full load)

Air Flow cfm[a]	Ent DB (°F)	Ambient Temperature																	
		85						95						105					
		Entering Wet Bulb																	
		61		67		73		61		67		73		61		67		73	
		MBh	SHC	MBh	SHC	MBh	SHC	MBh	SHC	MBh	SHC	MBh	SHC	MBh	SHC	MBh	SHC	MBh	SHC
3000	75	149.8	116.6	163.9	91.6	180.9	48.7	142.5	112.1	155.7	88.3	172.0	46.6	134.3	106.9	146.7	84.2	162.1	43.8
	80	153.0	130.6	165.9	113.6	181.8	83.7	145.7	125.4	157.8	109.4	172.9	80.6	137.5	119.5	148.7	104.5	163.1	76.8
	85	157.9	141.6	167.9	129.4	182.8	108.0	150.5	135.8	159.8	124.5	173.8	104.0	142.2	129.4	150.8	118.9	164.0	99.3
	90	163.8	150.7	171.9	141.5	183.7	125.5	156.2	144.5	163.7	136.0	174.7	120.8	147.7	137.7	154.6	129.9	164.9	115.5
3600	75	156.6	125.2	169.8	99.5	186.1	55.7	148.9	120.2	161.3	95.7	176.7	53.2	140.3	114.6	151.8	91.2	166.5	50.1
	80	160.4	139.8	172.4	122.2	187.5	91.6	152.7	134.2	163.9	117.5	178.2	88.1	144.1	127.9	154.4	112.2	168.0	83.9
	85	165.7	151.3	175.0	138.6	189.0	116.6	157.9	145.1	166.5	133.2	179.7	112.2	149.2	138.3	157.0	127.2	169.4	107.1
	90	172.0	160.9	179.5	151.2	190.5	134.7	163.9	154.2	170.8	145.3	181.2	129.6	155.0	147.0	161.3	138.7	170.9	123.8
4200	75	162.6	133.0	177.9	106.6	190.4	62.0	154.5	127.6	168.8	102.4	180.7	59.1	145.5	121.6	158.9	97.5	170.0	55.5
	80	166.9	148.2	178.1	129.9	192.5	98.7	158.8	142.1	169.2	124.9	182.7	94.8	149.8	135.4	159.4	119.1	172.1	90.1
	85	172.7	160.2	181.3	147.0	194.5	124.4	164.5	153.6	172.3	141.2	184.8	119.5	155.4	146.3	162.5	134.8	174.1	114.1
	90	179.3	170.2	186.2	160.1	196.6	143.1	170.9	163.1	177.2	153.8	186.8	137.6	161.6	155.5	167.2	146.8	176.2	131.4
4800	75	167.9	139.9	182.2	112.8	194.0	67.4	159.3	134.2	172.7	108.2	183.8	64.1	149.9	127.7	162.3	102.9	172.8	60.2
	80	172.7	155.7	183.1	136.9	196.6	105.0	164.2	149.3	173.7	131.4	186.5	100.6	154.8	142.2	163.5	125.3	175.4	95.6
	85	179.0	168.2	186.8	154.5	199.2	131.4	170.3	161.2	177.5	148.4	189.1	126.1	160.8	153.6	167.2	141.5	178.0	120.2
	90	185.9	178.7	192.2	168.2	201.9	150.7	177.1	171.3	182.7	161.4	191.7	144.7	167.3	163.2	172.4	154.0	180.7	138.2
5400	75	172.3	146.1	185.6	118.3	202.7	72.1	163.4	139.9	175.7	113.3	191.8	68.4	153.6	133.1	164.9	107.6	180.1	64.0
	80	177.8	162.5	187.3	143.1	202.9	110.5	168.8	155.6	177.5	137.2	192.2	105.7	159.0	148.1	166.9	130.6	180.6	100.3
	85	184.4	175.5	191.6	161.3	203.2	137.6	175.4	168.1	181.8	154.7	192.6	131.9	165.5	160.0	171.2	147.5	181.2	125.6
	90	191.7	186.4	197.4	175.5	206.4	157.5	182.5	178.6	187.5	168.3	195.8	151.1	172.3	170.1	176.8	160.5	184.4	144.1
6000	75	176.0	151.5	188.3	123.0	204.4	76.0	166.7	144.9	178.0	117.5	193.1	71.9	156.5	137.6	166.8	111.4	181.0	67.1
	80	182.0	168.5	190.7	148.5	205.4	115.2	172.7	161.2	180.5	142.2	194.3	110.0	162.5	153.3	169.5	135.2	182.3	104.1
	85	189.1	182.0	195.5	167.3	206.3	143.0	179.7	174.2	185.4	160.3	195.4	136.9	169.3	165.7	174.3	152.6	183.5	130.2
	90	196.8	193.3	201.8	181.9	210.1	163.5	187.1	185.1	191.5	174.4	199.1	156.7	176.6	176.2	180.4	166.2	187.3	149.3
6600	75	178.9	156.1	190.2	126.9	205.4	79.1	169.2	149.1	179.5	121.0	193.7	74.5	158.6	141.4	167.9	114.5	181.2	69.3
	80	185.5	173.7	193.3	153.1	207.0	119.1	175.7	166.0	182.7	146.3	195.5	113.5	165.1	157.6	171.3	139.0	183.1	107.2
	85	193.0	187.7	198.7	172.5	208.7	147.6	183.2	179.5	188.2	165.1	197.3	141.1	172.4	170.6	176.7	157.0	185.1	134.0
	90	201.0	199.5	205.5	187.6	213.0	168.7	190.9	190.8	194.8	179.7	201.7	161.5	180.0	180.0	183.2	171.1	189.4	153.7
7200	75	181.0	159.9	191.4	130.0	205.6	81.4	170.9	152.5	180.3	123.7	194.3	76.4	159.9	144.4	168.3	116.8	181.3	70.8
	80	188.2	178.1	195.2	156.8	207.9	122.2	178.0	170.0	184.2	149.7	196.0	116.2	167.0	161.2	172.3	141.9	183.2	109.5
	85	196.1	192.6	201.1	176.9	210.3	151.4	185.9	184.0	190.2	169.0	198.5	144.5	174.7	174.6	178.3	160.6	185.9	137.0
	90	204.5	204.5	208.3	192.5	215.2	173.1	194.0	194.0	197.2	184.2	203.4	165.5	182.7	182.7	185.3	175.1	190.8	157.3

Table 30. Gross cooling capacities 15 tons three phase high efficiency T/YH*180G3,4,W (full load)

Air Flow cfm[a]	Ent DB (°F)	Ambient Temperature																	
		115						120						125					
		Entering Wet Bulb																	
		61		67		73		61		67		73		61		67		73	
		MBh	SHC	MBh	SHC	MBh	SHC	MBh	SHC	MBh	SHC	MBh	SHC	MBh	SHC	MBh	SHC	MBh	SHC
3000	75	125.3	101.0	136.8	79.5	151.4	40.4	120.4	97.8	131.5	76.9	145.7	38.5	115.3	94.5	126.0	74.1	139.8	36.4
	80	128.5	113.0	138.8	98.9	152.4	72.3	123.6	109.5	133.6	95.9	146.7	69.9	118.5	105.8	128.1	92.7	140.8	67.2
	85	133.0	122.3	140.9	112.6	153.3	94.0	128.1	118.5	135.6	109.3	147.6	91.1	122.9	114.6	130.1	105.7	141.7	88.1
	90	138.3	130.2	144.6	123.1	154.2	109.5	133.3	126.2	139.2	119.4	148.5	106.2	128.0	122.0	133.7	115.6	142.6	102.8
3600	75	130.9	108.3	141.5	86.1	155.4	46.3	125.8	105.0	138.6	83.3	149.5	44.1	120.5	101.4	132.9	80.4	143.4	41.8
	80	134.6	120.9	144.1	106.2	156.8	79.0	129.5	117.2	138.7	103.0	151.0	76.3	124.3	113.3	133.0	99.6	144.9	73.5
	85	139.6	130.8	146.7	120.6	158.3	101.4	134.5	126.8	141.3	117.0	152.5	98.3	129.1	122.6	135.6	113.3	146.4	95.0
	90	145.2	139.0	150.9	131.5	159.8	117.4	140.0	134.8	145.3	127.7	153.9	113.9	134.5	130.5	139.6	123.6	147.9	110.3
4200	75	135.7	114.9	148.0	92.0	158.5	51.3	130.4	111.3	142.2	88.9	152.4	48.9	124.9	107.5	136.3	85.8	146.1	46.4
	80	140.0	128.0	148.7	112.7	160.6	84.8	134.7	124.1	143.0	109.3	154.5	82.0	129.2	120.0	137.1	105.7	148.2	78.9
	85	145.4	138.4	151.8	127.7	162.6	107.9	140.1	134.2	146.1	123.9	156.5	104.6	134.5	129.8	140.2	120.0	150.2	101.1
	90	151.4	147.1	156.4	139.2	164.7	124.6	145.9	142.7	150.7	135.1	158.6	120.9	140.3	138.1	144.7	130.9	152.3	117.1
4800	75	139.7	120.6	151.0	97.0	160.9	55.5	134.2	116.8	145.1	93.8	159.7	53.0	128.5	112.9	138.9	90.4	153.1	50.2
	80	144.6	134.4	152.4	118.5	163.5	89.9	139.1	130.2	146.5	114.8	159.8	86.8	133.4	125.9	140.4	111.0	153.2	83.5
	85	150.4	145.3	156.1	134.0	166.1	113.7	144.9	140.8	150.2	130.0	159.8	110.2	139.1	136.3	144.1	125.9	153.3	106.5
	90	156.7	154.4	161.2	146.0	168.7	130.9	151.1	149.8	155.2	141.7	162.5	127.0	145.2	145.0	149.1	137.3	156.0	123.0
5400	75	142.9	125.6	153.3	101.2	167.5	59.0	137.3	121.6	147.1	97.8	160.8	56.2	131.4	117.4	140.7	94.2	154.0	53.2
	80	148.4	139.9	155.4	123.4	168.2	94.2	142.7	135.6	149.3	119.6	161.6	90.9	136.8	131.1	143.0	115.6	154.8	87.4
	85	154.7	151.3	159.7	139.6	168.8	118.6	148.9	146.7	153.6	135.4	162.4	114.9	143.0	141.9	147.3	131.0	155.6	111.0
	90	161.3	160.9	165.1	152.1	172.0	136.5	155.5	155.5	159.0	147.6	165.6	132.4	149.4	149.4	152.6	142.9	158.8	128.2
6000	75	145.4	129.7	154.8	104.7	168.0	61.6	139.5	125.5	148.4	101.0	161.2	58.6	133.4	121.1	141.8	97.3	154.1	55.5
	80	151.4	144.7	157.6	127.6	169.4	97.6	145.5	140.1	151.3	123.5	162.6	94.1	139.4	135.4	144.8	119.3	155.6	90.5
	85	158.1	156.6	162.4	144.3	170.8	122.8	152.2	151.7	156.1	139.9	164.1	118.9	146.0	146.0	149.6	135.4	157.2	114.8
	90	165.1	165.1	168.4	157.3	174.6	141.2	159.1	159.1	162.0	152.6	167.9	137.0	152.8	152.8	155.4	147.8	161.0	132.5
6600	75	147.1	133.1	155.5	107.3	168.5	63.4	141.0	128.7	148.9	103.5	161.5	60.3	134.7	124.1	142.1	99.5	154.2	56.9
	80	153.6	148.6	159.0	130.9	169.9	100.3	147.6	143.9	152.5	126.7	162.9	96.6	141.3	138.9	145.8	122.2	155.7	92.7
	85	160.8	160.8	164.4	148.3	172.0	126.2	154.7	154.7	157.9	143.7	165.1	122.0	148.3	148.3	151.2	138.9	158.0	117.7
	90	168.2	168.2	170.8	161.8	176.3	145.2	161.9	161.9	164.2	156.9	169.4	140.7	155.5	155.5	157.5	151.8	162.3	136.1
7200	75	148.0	135.6	156.1	109.2	169.1	64.5	141.7	131.0	149.4	105.1	161.8	61.1	135.2	126.2	142.4	100.9	154.4	57.5
	80	155.1	151.8	159.6	133.5	170.3	102.2	148.8	146.8	152.9	129.0	163.2	98.3	142.3	141.7	146.0	124.4	155.8	94.2
	85	162.7	162.7	165.6	151.4	172.4	128.8	156.4	156.4	158.9	146.6	165.3	124.4	149.8	149.8	152.0	141.6	158.7	119.9
	90	170.4	170.4	172.4	165.4	177.3	148.4	164.0	164.0	165.7	160.4	170.2	143.7	157.3	157.3	158.7	155.1	162.8	138.8

Notes:

1. All capacities shown are gross and have not considered indoor fan heat. To obtain NET cooling capacity subtract indoor fan heat. For indoor fan heat formula, refer to appropriate airflow table notes.
2. MBh = Total Gross Capacity
3. SHC = Sensible Heat Capacity
4. *Indicates both downflow and horizontal units.

(a) For 3000, 3600, and 4200 cfm-Unit applications below 320 cfm/ton are only applicable to Constant Volume THD models without electric heat and YHD models equipped with modulating gas heat. See below for restrictions:
- Electric heaters on applications below 320 cfm/ton.
- Dehumidification (Hot Gas Reheat) with Frostat and Crankcage heaters are required on applications below 320 cfm/ton.
- Multi-speed or single zone VAV applications are capable of running below 320 cfm/ton during low speed airflow operation, but "full" airflow must be set to 320 cfm/ton or higher.

Table 31. Gross cooling capacities 15 tons three phase dehumidification (hot gas reheat) option high efficiency T/YHD180G3,4,W (Digit 22 = B)

Air Flow cfm[a]	Ent DB (°F)	Ambient Temperature																	
		85						95						105					
		Entering Wet Bulb																	
		61		67		73		61		67		73		61		67		73	
		MBh	SHC	MBh	SHC	MBh	SHC	MBh	SHC	MBh	SHC	MBh	SHC	MBh	SHC	MBh	SHC	MBh	SHC
3000	75	149.8	108.9	167.7	71.3	190.8	66.8	141.5	104.7	158.6	68.7	180.8	63.3	132.6	99.7	148.8	65.2	170.1	59.5
	80	151.5	129.2	166.7	101.1	187.0	65.5	143.4	124.3	157.7	97.7	177.1	62.0	134.7	118.5	148.1	93.4	166.7	58.3
	85	154.6	144.8	167.0	126.0	184.5	89.1	146.7	139.2	158.2	121.9	174.9	86.5	138.1	132.6	148.8	116.9	164.6	83.0
	90	159.1	155.7	168.7	146.3	183.5	118.7	151.3	149.2	160.1	141.4	174.0	115.3	143.0	141.9	150.9	135.6	163.9	111.1
3900	75	160.4	120.9	176.9	82.0	198.6	69.5	151.6	116.3	167.3	79.0	188.1	65.8	142.3	110.9	157.1	75.1	177.0	61.9
	80	163.1	142.6	176.9	113.1	195.8	68.5	154.6	137.2	167.5	109.3	185.5	64.9	145.4	131.0	157.4	104.6	174.5	61.1
	85	167.2	159.5	178.2	139.4	194.4	101.1	158.8	153.4	169.0	134.8	184.2	98.1	149.8	146.4	159.1	129.4	173.5	94.2
	90	172.7	171.6	180.9	160.9	194.3	132.0	164.5	164.5	171.9	155.6	184.3	128.2	155.7	155.7	162.2	149.4	173.8	123.5
4800	75	169.3	131.7	184.4	91.5	204.6	71.6	160.0	126.7	174.3	88.0	193.7	67.8	150.2	120.8	163.6	83.7	182.1	63.7
	80	173.0	154.7	185.4	123.8	202.8	74.8	164.0	148.9	175.5	119.6	192.1	72.1	154.3	142.3	164.9	114.5	180.7	68.6
	85	178.1	172.9	187.7	151.4	202.4	111.8	169.3	166.4	178.0	146.5	191.8	108.4	159.8	159.0	167.7	140.6	180.6	104.0
	90	184.6	184.6	191.4	174.3	203.4	144.0	176.0	176.0	181.9	168.5	192.9	139.8	166.7	166.7	171.7	161.9	181.9	134.7
5400	75	174.2	138.2	188.4	97.1	207.7	72.7	164.7	132.9	178.0	93.4	196.4	68.7	154.6	126.8	167.0	88.8	184.5	64.6
	80	178.6	162.0	190.0	130.3	206.6	80.4	169.3	156.0	179.8	125.8	195.5	77.4	159.3	149.1	169.0	120.4	183.8	73.6
	85	184.4	181.1	193.1	158.8	206.8	118.2	175.3	174.3	183.0	153.5	195.9	114.5	165.5	165.5	172.4	147.4	184.4	109.9
	90	191.6	191.6	197.4	182.5	208.4	151.4	182.6	182.6	187.6	176.5	197.7	146.9	173.0	173.0	177.2	169.5	186.4	141.5
6000	75	178.4	144.1	191.6	102.1	210.0	73.5	168.5	138.6	180.9	98.1	198.4	69.4	158.1	132.1	169.6	93.2	186.2	65.2
	80	183.5	168.8	193.9	136.2	209.5	85.4	173.8	162.5	183.4	131.4	198.1	82.2	163.6	155.3	172.3	125.8	186.1	78.1
	85	189.9	188.8	197.6	165.5	210.4	124.1	180.5	180.5	187.3	160.0	199.2	120.1	170.4	170.4	176.4	153.6	187.4	115.3
	90	197.8	197.8	202.7	190.1	212.7	158.1	188.5	188.5	192.6	183.8	201.7	153.4	178.6	178.6	181.8	176.6	190.1	147.7
6600	75	181.8	149.5	194.1	106.6	211.5	74.0	171.6	143.7	183.0	102.3	199.6	69.9	160.9	137.0	171.4	97.1	187.1	65.5
	80	187.5	175.0	197.1	141.5	211.7	89.9	177.6	168.5	186.2	136.5	200.0	86.4	167.0	161.0	174.8	130.6	187.7	82.0
	85	194.7	194.7	201.4	171.8	213.3	129.5	184.9	184.9	190.8	166.0	201.8	125.2	174.5	174.5	179.5	159.2	189.7	120.0
	90	203.2	203.2	207.2	197.2	216.3	164.3	193.6	193.6	196.7	190.6	204.9	159.3	183.4	183.4	185.6	183.2	193.0	153.3
7200	75	184.4	154.3	195.7	110.5	212.2	74.3	173.9	148.2	184.4	105.9	200.0	70.0	162.9	141.2	172.5	100.5	187.2	65.5
	80	190.8	180.7	199.4	146.3	213.1	93.8	180.6	173.9	188.3	141.0	201.1	90.0	169.7	166.1	176.5	134.8	188.5	85.3
	85	198.7	198.7	204.5	177.4	215.4	134.2	188.6	188.6	193.5	171.3	203.6	129.7	177.9	177.9	181.9	164.3	191.1	124.2
	90	207.8	207.8	210.9	203.8	219.0	170.0	198.0	198.0	200.1	196.9	207.4	164.6	188.7	188.7	188.7	188.7	195.1	158.4

Table 31. Gross cooling capacities 15 tons three phase dehumidification (hot gas reheat) option high efficiency T/YHD180G3,4,W (Digit 22 = B)

Air Flow cfm[a]	Ent DB (°F)	Ambient Temperature																	
		115						120						125					
		Entering Wet Bulb																	
		61		67		73		61		67		73		61		67		73	
		MBh	SHC	MBh	SHC	MBh	SHC	MBh	SHC	MBh	SHC	MBh	SHC	MBh	SHC	MBh	SHC	MBh	SHC
3000	75	123.1	93.8	138.4	60.9	158.9	55.6	118.1	90.5	133.0	58.3	153.0	53.5	112.9	87.0	127.4	55.6	147.0	51.4
	80	125.3	111.8	137.9	88.3	155.6	54.5	120.4	108.1	132.6	85.4	149.8	52.4	115.4	104.2	127.1	82.2	143.9	50.4
	85	129.0	125.1	138.8	111.0	153.7	78.6	124.2	121.1	133.5	107.7	148.0	76.1	119.2	116.8	128.1	104.1	142.2	73.3
	90	134.0	133.7	141.0	128.9	153.1	105.9	129.3	129.2	135.9	125.2	147.6	103.0	124.4	124.4	130.6	121.3	141.8	99.9
3900	75	132.3	104.6	146.2	70.3	165.3	57.8	127.1	101.1	140.6	67.6	159.2	55.7	121.7	97.3	134.7	64.6	152.9	53.5
	80	135.6	123.9	146.7	99.0	163.0	57.1	130.5	120.0	141.2	95.9	157.0	54.9	125.2	115.9	135.4	92.6	150.8	52.8
	85	140.2	138.5	148.6	123.0	162.1	89.3	135.2	134.2	143.1	119.5	156.2	86.6	130.0	129.7	137.5	115.8	150.1	83.6
	90	146.3	146.3	151.9	142.3	162.6	118.0	141.3	141.3	146.5	138.4	156.8	114.8	136.2	136.2	140.9	134.2	150.8	111.5
4800	75	139.8	114.1	152.3	78.5	169.9	59.5	134.3	110.4	146.4	75.5	163.6	57.3	128.7	106.4	140.4	72.4	157.1	55.0
	80	144.1	134.7	153.8	108.5	168.7	64.1	138.7	130.6	148.0	105.2	162.4	61.6	133.2	126.3	142.1	101.6	156.0	58.8
	85	149.8	149.8	156.7	133.8	168.8	98.8	144.5	144.5	151.0	130.1	162.6	95.9	139.1	139.1	145.1	126.2	156.4	92.7
	90	156.8	156.8	161.0	154.4	170.3	128.7	151.6	151.6	155.4	150.3	164.2	125.4	146.3	146.3	149.6	145.9	158.0	121.8
5400	75	143.8	119.7	155.4	83.3	172.0	60.2	138.2	115.9	149.3	80.2	165.6	57.9	132.4	111.8	143.1	76.9	158.9	55.6
	80	148.8	141.3	157.6	114.2	171.5	68.9	143.3	137.0	151.6	110.7	165.1	66.2	137.6	132.6	145.5	107.0	158.5	63.3
	85	155.1	155.1	161.1	140.3	172.3	104.4	149.7	149.7	155.3	136.5	166.0	101.3	144.1	144.1	149.3	132.4	159.5	98.0
	90	162.8	162.8	166.1	161.7	174.4	135.2	157.5	157.5	160.3	157.5	168.2	131.7	152.9	152.0	154.4	153.0	161.9	128.0
6000	75	147.1	124.8	157.7	87.5	173.4	60.7	141.3	120.8	151.5	84.2	166.8	58.4	135.4	116.6	145.1	80.8	160.0	56.0
	80	152.7	147.2	160.5	119.2	173.5	73.1	147.0	142.8	154.4	115.6	167.0	70.2	141.2	138.2	148.2	111.8	160.3	67.2
	85	159.7	159.7	164.8	146.3	175.0	109.5	154.2	154.2	158.8	142.3	168.5	106.2	148.4	148.4	152.6	138.0	161.9	102.8
	90	168.7	168.1	170.4	168.5	177.8	141.1	162.8	162.8	164.5	164.2	171.5	137.5	158.4	158.4	158.4	158.4	165.0	133.7
6600	75	149.5	129.4	159.2	91.1	174.0	60.9	143.6	125.2	152.8	87.7	167.2	58.5	137.6	120.9	146.3	84.1	160.3	56.1
	80	155.9	152.6	162.7	123.7	174.8	76.7	150.0	148.1	156.5	120.0	168.1	73.7	144.1	143.4	150.1	116.0	161.2	70.5
	85	163.6	163.6	167.7	151.6	176.9	114.0	157.8	157.8	161.5	147.5	170.3	110.6	151.9	151.9	155.2	143.1	163.6	107.0
	90	174.0	174.0	174.0	174.0	180.4	146.5	167.9	167.9	167.9	167.9	173.9	142.7	161.7	161.7	161.7	161.7	167.3	138.8
7200	75	151.2	133.3	159.9	94.2	173.8	60.8	145.2	129.0	153.4	90.7	166.9	58.4	138.9	124.6	146.8	86.9	159.8	55.9
	80	158.2	157.5	164.2	127.7	175.2	79.7	152.3	152.3	157.8	123.8	168.4	76.6	146.1	146.1	151.2	119.7	161.4	73.3
	85	166.6	166.6	169.8	156.5	178.1	117.9	160.7	160.7	163.5	152.2	171.3	114.4	154.7	154.7	157.0	147.7	164.4	110.7
	90	176.7	176.7	176.7	176.7	182.3	151.3	170.5	170.5	170.5	170.5	175.6	147.4	164.1	164.1	164.1	164.1	168.8	143.3

Notes:

1. All capacities shown are gross and have not considered indoor fan heat. To obtain **NET** cooling capacity subtract indoor fan heat. For indoor fan heat formula, refer to appropriate airflow table notes.
2. MBh = Total Gross Capacity
3. SHC = Sensible Heat Capacity

(a) For 3000 and 3900 cfm-Unit applications below 320 cfm/ton are only applicable to Constant Volume THD models without electric heat and YHD models equipped with modulating gas heat. See below for restrictions:
- Electric heaters on applications below 320 cfm/ton.
- Dehumidification (Hot Gas Reheat) with Frostat and Crankcage heaters are required on applications below 320 cfm/ton.
- Multi-speed or single zone VAV applications are capable of running below 320 cfm/ton during low speed airflow operation, but "full" airflow must be set to 320 cfm/ton or higher.

Table 32. Gross cooling capacities 17½ tons three phase high efficiency T/YH*210G3,4,W (stage 1)

Air Flow cfm[a]	Ent DB (°F)	Ambient Temperature											
		85						95					
		Entering Wet Bulb											
		61		67		73		61		67		73	
		MBh	SHC	MBh	SHC	MBh	SHC	MBh	SHC	MBh	SHC	MBh	SHC
2800	75	63.9	60.0	68.3	47.4	74.6	22.7	59.8	56.7	64.0	44.6	70.2	20.3
	80	67.5	66.8	70.0	59.7	75.7	44.0	63.4	63.4	65.8	56.6	71.3	41.4
	85	71.6	71.6	73.0	68.1	76.7	58.1	67.5	67.5	68.8	64.8	72.4	55.2
	90	75.8	75.8	76.7	74.3	79.2	67.9	71.7	71.7	72.5	70.9	74.8	64.8
3500	75	65.8	63.2	69.7	50.8	75.5	26.3	61.5	59.7	65.2	47.7	70.8	23.7
	80	69.8	69.8	71.9	63.3	77.0	47.8	65.5	65.5	67.4	59.9	72.3	44.9
	85	74.1	74.1	75.2	71.9	78.4	62.1	69.8	69.8	70.8	68.3	73.8	58.9
	90	78.6	78.6	79.1	78.4	81.2	72.1	74.2	74.2	74.7	74.7	76.7	68.7
4200	75	67.3	65.7	70.6	53.5	76.0	29.2	62.8	61.9	65.9	50.1	71.1	26.3
	80	71.6	71.6	73.2	66.2	77.8	50.9	67.0	67.0	68.5	62.5	73.0	47.7
	85	76.2	76.2	76.9	75.0	79.7	65.4	71.6	71.6	72.2	71.2	74.9	61.9
	90	80.9	80.9	81.1	81.1	82.8	75.6	76.3	76.3	76.4	76.4	78.0	71.9
4900	75	68.4	67.6	71.1	55.5	76.8	31.5	63.6	63.5	66.2	51.9	71.5	28.2
	80	72.9	72.9	74.1	68.4	77.9	53.3	68.2	68.2	69.2	64.5	73.1	49.7
	85	77.8	77.8	78.1	77.4	80.5	67.9	73.0	73.0	73.2	73.2	75.5	64.1
	90	81.0	81.0	82.6	82.6	84.0	78.3	76.5	75.0	77.7	77.7	79.0	74.4
5600	75	68.9	68.7	71.2	56.9	77.0	33.0	63.7	63.7	67.0	52.9	72.2	29.5
	80	73.9	73.9	74.6	69.9	78.2	55.0	68.9	68.9	69.5	65.7	73.9	51.1
	85	78.0	78.0	78.9	78.9	80.9	69.8	73.2	71.0	73.8	73.8	75.6	65.7
	90	82.1	82.1	83.7	83.7	84.7	80.4	77.0	77.0	78.6	78.6	79.4	76.1
6125	75	69.1	69.1	71.6	57.4	77.4	33.7	63.9	63.9	68.0	53.2	73.0	30.0
	80	74.3	74.3	74.7	70.5	78.4	55.8	69.1	69.1	71.0	66.1	74.4	51.7
	85	78.6	78.6	79.3	79.3	81.8	70.7	73.5	73.5	74.0	74.0	77.0	66.4
	90	83.5	83.5	84.2	84.2	84.9	81.5	77.2	77.2	78.9	78.9	79.5	77.0

Notes:

1. All capacities shown are gross and have not considered indoor fan heat. To obtain NET cooling capacity subtract indoor fan heat. For indoor fan heat formula, refer to appropriate airflow table notes.
2. MBh = Total Gross Capacity
3. SHC = Sensible Heat Capacity
4. *Indicates both downflow and horizontal units.

(a) For 2800, 3500, 4200, and 4900 cfm-Unit applications below 320 cfm/ton are only applicable to Constant Volume THD models without electric heat and YHD models equipped with modulating gas heat. See below for restrictions:
- Electric heaters on applications below 320 cfm/ton.
- Frostat and Crankcase heaters are required on applications below 320 cfm/ton.
- Multi-speed, single zone VAV or multi-zone VAV applications are capable of running below 320 cfm/ton during low speed airflow operation, but "full" airflow must be set to 320 cfm/ton or higher.

Table 33. Gross cooling capacities 17½ tons three phase high efficiency T/YH*210G3,4,W (stage 2)

Air Flow cfm[a]	Ent DB (°F)	Ambient Temperature											
		85						95					
		Entering Wet Bulb											
		61		67		73		61		67		73	
		MBh	SHC	MBh	SHC	MBh	SHC	MBh	SHC	MBh	SHC	MBh	SHC
2800	75	123.5	100.2	134.4	80.1	147.8	44.0	117.3	96.3	127.4	77.0	139.9	41.8
	80	126.3	111.0	136.4	97.8	148.9	73.2	120.1	106.7	129.4	94.1	141.1	70.2
	85	130.4	119.4	138.3	110.3	150.0	92.9	124.2	114.7	131.3	106.1	142.3	89.4
	90	135.4	126.3	141.8	119.6	151.1	106.9	129.0	121.3	134.8	115.0	143.4	102.8
3500	75	129.9	108.5	142.2	87.5	152.2	50.4	123.2	104.2	134.6	84.0	143.9	47.6
	80	133.3	120.2	142.4	106.1	154.0	80.6	126.7	115.4	135.0	102.0	145.8	77.2
	85	138.0	129.2	145.1	119.4	155.8	101.2	131.3	124.0	137.7	114.7	147.7	97.2
	90	143.5	136.7	149.2	129.3	157.7	115.9	136.7	131.2	141.7	124.3	149.6	111.4
4200	75	135.1	115.8	146.3	93.8	160.5	55.6	128.0	111.0	138.3	89.8	151.6	52.4
	80	139.3	128.2	147.4	113.3	160.5	86.9	132.2	122.9	139.6	108.7	151.8	83.0
	85	144.5	137.8	150.7	127.3	160.6	108.4	137.4	132.2	142.9	122.2	152.0	103.9
	90	150.5	145.9	155.4	137.9	163.1	123.8	143.2	139.9	147.6	132.5	154.6	118.9
4900	75	139.2	121.9	149.3	99.0	162.4	59.6	131.7	116.7	140.9	94.5	153.0	56.0
	80	144.1	135.1	151.3	119.4	163.3	92.0	136.6	129.4	143.0	114.3	154.1	87.7
	85	149.9	145.4	155.3	134.1	164.2	114.4	142.4	139.3	147.1	128.6	155.2	109.5
	90	156.3	153.9	160.6	145.4	167.5	130.6	148.6	147.5	152.3	139.5	158.5	125.3
5600	75	142.3	126.9	151.2	103.0	163.2	62.6	134.3	121.2	142.3	98.1	153.4	58.5
	80	147.8	140.8	154.1	124.3	165.0	96.0	139.9	134.7	145.3	118.8	155.4	91.2
	85	154.2	151.7	158.8	139.8	166.8	119.3	146.3	145.2	150.1	133.8	157.4	114.0
	90	161.1	160.8	164.6	151.7	170.7	136.3	152.9	152.9	155.9	145.4	161.4	130.5
6125	75	143.8	129.9	151.9	105.3	164.1	64.0	135.5	123.9	142.7	100.0	154.0	59.6
	80	149.9	144.4	155.4	127.3	165.5	98.3	141.7	137.9	146.4	121.4	155.6	93.2
	85	156.7	155.8	160.7	143.3	168.0	122.3	148.4	148.4	151.7	137.0	158.2	116.6
	90	163.9	163.9	167.0	155.7	172.5	139.8	155.4	155.4	157.9	149.0	162.8	133.6

Notes:

1. All capacities shown are gross and have not considered indoor fan heat. To obtain NET cooling capacity subtract indoor fan heat. For indoor fan heat formula, refer to appropriate airflow table notes.
2. MBh = Total Gross Capacity
3. SHC = Sensible Heat Capacity
4. *Indicates both downflow and horizontal units.

(a) For 2800, 3500, 4200, and 4900 cfm-Unit applications below 320 cfm/ton are only applicable to Constant Volume THD models without electric heat and YHD models equipped with modulating gas heat. See below for restrictions:
- Electric heaters on applications below 320 cfm/ton.
- Frostat and Crankcase heaters are required on applications below 320 cfm/ton.
- Multi-speed, single zone VAV or multi-zone VAV applications are capable of running below 320 cfm/ton during low speed airflow operation, but "full" airflow must be set to 320 cfm/ton or higher.

Table 34. Gross cooling capacities 17½ tons three phase high efficiency T/YH*210G3,4,W (full load)

Air Flow cfm[a]	Ent DB (°F)	Ambient Temperature																	
		85						95						105					
		Entering Wet Bulb																	
		61		67		73		61		67		73		61		67		73	
		MBh	SHC	MBh	SHC	MBh	SHC	MBh	SHC	MBh	SHC	MBh	SHC	MBh	SHC	MBh	SHC	MBh	SHC
3500	75	178.2	140.1	193.8	111.1	207.3	60.7	169.5	134.8	186.6	107.2	204.8	58.4	159.9	128.9	174.5	102.7	183.6	55.5
	80	182.3	156.6	197.4	136.9	211.8	102.1	173.6	150.4	187.6	132.0	205.4	98.5	164.0	143.7	177.0	126.4	187.8	94.3
	85	188.5	169.5	200.2	155.6	217.6	130.7	179.6	162.7	190.4	149.7	206.7	126.0	169.9	155.2	179.7	143.3	195.0	120.8
	90	195.9	180.3	205.3	169.8	219.0	151.3	186.7	172.9	195.3	163.3	208.1	145.8	176.7	164.9	184.5	156.2	196.4	139.7
4200	75	186.2	150.2	194.6	120.2	212.8	68.8	177.0	144.4	193.2	115.8	211.6	66.0	166.9	138.0	183.6	110.8	196.3	62.6
	80	191.0	167.4	205.2	147.0	223.4	111.3	181.8	160.8	194.9	141.5	212.2	107.2	171.7	153.5	183.7	135.5	198.7	102.5
	85	197.7	181.0	208.6	166.4	225.1	140.8	188.3	173.7	198.3	160.1	213.7	135.6	178.1	165.7	187.1	153.2	201.5	129.9
	90	205.5	192.4	214.2	181.3	227.2	162.2	195.9	184.5	203.8	174.3	215.8	156.2	185.3	176.0	192.4	166.7	203.5	149.6
4900	75	193.4	159.4	211.5	128.5	229.7	76.0	183.6	153.0	200.5	123.6	217.5	72.7	173.0	146.1	188.6	118.0	204.6	68.8
	80	198.8	177.4	212.0	156.2	230.6	119.6	189.1	170.2	201.2	150.2	218.2	114.9	178.5	162.4	189.5	143.6	205.4	109.7
	85	206.0	191.6	216.1	176.3	231.7	150.0	196.1	183.7	205.2	169.5	219.8	144.3	185.4	175.3	193.6	162.1	207.0	138.0
	90	214.3	203.5	222.3	191.9	234.4	172.2	204.1	195.1	211.3	184.4	222.5	165.6	193.0	186.1	199.4	176.3	209.8	158.5
5600	75	199.6	167.6	216.7	135.8	236.2	82.3	189.4	160.8	205.1	130.4	223.6	78.5	178.3	153.3	192.7	124.3	206.4	74.0
	80	205.7	186.4	218.0	164.4	237.1	126.9	195.5	178.7	206.6	157.9	224.2	121.8	184.4	170.4	194.4	150.8	211.7	116.0
	85	213.5	201.3	222.7	185.3	237.4	158.2	203.1	192.9	211.4	178.0	225.0	152.0	191.8	183.9	199.1	170.0	211.7	145.2
	90	222.1	213.8	229.4	201.6	240.8	181.2	211.4	204.9	217.9	193.6	228.4	174.2	199.8	195.3	205.5	184.9	215.1	166.5
6300	75	205.0	174.9	220.9	142.2	240.8	87.7	194.2	167.6	208.8	136.2	227.7	83.3	182.6	159.6	195.9	129.7	208.9	78.4
	80	211.7	194.5	223.1	171.7	241.7	133.3	201.0	186.3	211.2	164.7	228.6	127.7	189.4	177.4	198.5	157.1	214.6	121.4
	85	220.0	210.0	228.4	193.4	242.2	165.6	209.1	201.1	216.6	185.6	229.3	158.8	197.3	191.6	203.8	177.1	215.5	151.5
	90	229.1	223.1	235.7	210.4	246.2	189.3	217.8	213.7	223.6	201.8	233.3	181.8	205.7	203.6	210.8	192.6	219.5	173.6
7000	75	209.4	181.3	224.2	147.7	243.2	92.1	198.2	173.4	211.7	141.2	230.3	87.2	186.0	165.0	198.2	134.1	210.2	81.8
	80	216.9	201.6	227.2	178.1	244.8	138.8	205.6	192.9	214.8	170.5	231.2	132.7	193.4	183.6	201.6	162.4	216.7	125.9
	85	225.6	217.8	233.3	200.6	246.1	172.0	214.2	208.4	220.9	192.2	232.7	164.7	201.9	198.4	207.6	183.2	218.4	156.9
	90	235.1	231.5	241.0	218.2	250.8	196.5	223.4	221.5	228.5	209.1	237.4	188.4	210.8	210.8	215.1	199.4	223.1	179.7
7700	75	213.0	186.8	226.7	152.2	245.6	95.6	201.2	178.4	213.6	145.2	231.9	90.2	188.6	169.4	199.6	137.6	210.6	84.2
	80	221.1	207.9	230.5	183.5	247.0	143.4	209.3	198.6	217.6	175.5	232.8	136.7	196.6	188.8	203.8	166.8	217.9	129.4
	85	230.4	224.7	237.2	206.8	249.1	177.5	218.4	214.8	224.3	197.9	235.2	169.7	205.6	204.3	210.5	188.4	220.4	161.4
	90	240.3	238.9	245.5	225.1	254.5	202.8	228.0	228.0	232.4	215.5	240.5	194.2	214.9	214.9	218.5	205.3	225.7	185.0
8400	75	215.7	191.3	228.2	155.8	246.8	98.2	203.4	182.4	214.6	148.3	232.7	92.3	190.2	172.9	200.2	140.2	220.4	85.8
	80	224.4	213.2	232.9	188.1	248.3	147.1	212.1	203.4	219.5	179.5	233.6	139.9	199.0	193.1	205.2	170.3	220.8	132.1
	85	234.2	230.7	240.2	212.1	251.3	182.0	221.8	220.3	226.8	202.7	236.8	173.8	208.4	208.4	212.6	192.7	221.5	164.9
	90	244.5	244.5	249.1	231.1	257.3	208.1	231.8	231.8	235.5	221.0	242.8	199.0	218.1	218.1	221.1	210.2	227.5	189.3

Table 34. Gross cooling capacities 17½ tons three phase high efficiency T/YH*210G3,4,W (full load)

Air Flow cfm[a]	Ent DB (°F)	Ambient Temperature																	
		115						120						125					
		Entering Wet Bulb																	
		61		67		73		61		67		73		61		67		73	
		MBh	SHC	MBh	SHC	MBh	SHC	MBh	SHC	MBh	SHC	MBh	SHC	MBh	SHC	MBh	SHC	MBh	SHC
3500	75	149.5	122.4	158.0	97.6	172.5	52.1	144.0	119.0	155.8	94.8	165.9	50.1	138.2	115.3	148.3	91.9	160.8	48.0
	80	153.6	136.3	165.4	120.3	176.7	89.5	148.1	132.4	159.3	117.0	169.4	86.9	142.3	128.4	153.0	113.5	163.4	84.1
	85	159.3	147.2	168.2	136.3	182.4	114.9	153.7	143.0	162.1	132.6	175.8	111.8	147.8	138.6	155.8	128.7	169.0	108.4
	90	165.8	156.4	172.8	148.5	183.8	133.0	160.1	151.8	166.7	144.4	177.2	129.4	154.1	147.2	160.3	140.2	170.4	125.7
4200	75	156.0	131.0	171.4	105.2	184.6	58.6	150.2	127.2	164.9	102.2	174.8	56.4	144.2	123.3	158.3	99.0	162.4	54.0
	80	160.8	145.6	171.6	128.8	186.8	97.2	155.0	141.5	165.3	125.2	175.3	94.3	149.0	137.2	158.7	121.5	168.6	91.2
	85	167.0	157.2	175.0	145.6	188.4	123.5	161.1	152.7	168.7	141.6	181.5	120.1	155.0	148.0	162.1	137.5	174.4	116.5
	90	173.9	166.9	180.2	158.5	190.4	142.3	167.9	162.1	173.8	154.1	183.6	138.5	161.6	157.2	167.1	149.6	176.5	134.5
4900	75	161.6	138.6	175.9	111.9	190.2	64.3	155.5	134.6	169.2	108.6	180.7	61.8	149.3	130.4	162.3	105.2	175.1	59.2
	80	167.0	154.0	176.9	136.4	192.8	103.9	161.0	149.6	170.3	132.6	181.3	100.7	154.7	145.0	163.5	128.6	176.4	97.4
	85	173.7	166.2	181.0	154.0	193.4	131.1	167.6	161.4	174.4	149.8	186.3	127.4	161.3	156.5	167.6	145.3	178.9	123.6
	90	181.1	176.5	186.7	167.5	196.1	150.7	174.8	171.5	180.0	162.9	189.0	146.6	168.3	166.3	173.1	158.2	181.7	142.4
5600	75	166.3	145.3	179.4	117.7	192.5	69.0	160.0	141.0	172.5	114.1	184.5	66.3	153.5	136.6	165.3	110.4	176.9	63.4
	80	172.4	161.5	181.4	143.1	197.4	109.7	166.1	156.8	174.5	139.0	189.9	106.3	159.6	152.0	167.4	134.8	182.2	102.7
	85	179.6	174.3	186.1	161.5	197.6	137.8	173.2	169.3	179.2	157.0	190.2	133.9	166.6	164.1	172.1	152.3	182.6	129.8
	90	187.4	185.2	192.3	175.7	201.0	158.2	180.9	179.9	185.4	170.8	193.6	153.9	174.1	174.1	178.2	165.8	186.0	149.3
6300	75	170.1	151.0	182.1	122.5	194.1	72.8	163.6	146.5	174.9	118.7	185.6	69.8	156.8	141.9	167.5	114.8	178.3	66.7
	80	176.9	168.0	184.9	148.8	199.8	114.6	170.3	163.1	177.8	144.5	192.1	110.9	163.5	158.0	170.4	140.0	184.1	107.1
	85	184.6	181.5	190.2	168.0	200.8	143.6	178.0	176.2	183.1	163.2	193.2	139.4	171.1	170.8	175.8	158.3	185.3	135.1
	90	192.8	192.8	197.0	182.9	204.9	164.8	186.0	186.0	189.8	177.7	197.2	160.2	179.0	179.0	182.4	172.5	189.4	155.4
7000	75	173.0	155.9	183.9	126.5	194.4	75.7	166.2	151.1	176.5	122.4	186.5	72.4	159.2	146.2	168.8	118.2	178.8	69.0
	80	180.4	173.6	187.5	153.7	201.3	118.5	173.6	168.4	180.1	149.1	193.3	114.6	166.6	163.1	172.5	144.3	185.1	110.5
	85	188.7	187.8	193.5	173.6	203.2	148.5	181.8	181.8	186.2	168.6	195.3	144.0	174.7	174.7	178.6	163.4	187.2	139.4
	90	197.3	197.3	200.8	189.1	207.9	170.4	190.2	190.2	193.4	183.8	200.0	165.5	183.0	183.0	185.7	178.2	191.9	160.5
7700	75	175.1	159.8	184.8	129.4	195.2	77.6	168.0	154.8	177.1	125.1	187.2	74.1	160.7	149.6	169.2	120.7	179.2	70.5
	80	183.1	178.3	189.2	157.6	202.0	121.5	176.0	172.9	181.6	152.7	193.7	117.4	168.7	167.3	173.8	147.7	185.3	113.0
	85	191.9	191.9	195.9	178.3	204.7	152.4	184.8	184.8	188.3	173.0	196.5	147.7	177.4	177.4	180.4	167.6	188.1	142.8
	90	200.9	200.9	203.8	194.5	210.1	175.1	193.6	193.6	196.0	188.8	201.9	170.0	186.1	186.1	188.1	183.1	193.5	164.7
8400	75	176.2	162.8	184.8	131.5	195.6	78.7	168.9	157.5	177.8	126.9	187.9	74.9	161.3	152.0	170.0	122.2	180.3	71.0
	80	184.9	182.1	190.1	160.6	202.4	123.6	177.6	176.4	182.2	155.4	194.3	119.2	170.0	170.0	174.1	150.2	184.4	114.6
	85	194.2	194.2	197.4	182.1	205.3	155.4	186.8	186.8	189.5	176.5	196.8	150.4	179.2	179.2	181.4	170.8	188.2	145.3
	90	203.6	203.6	205.8	198.9	211.3	178.9	196.1	196.1	197.8	193.0	202.9	173.5	188.3	188.3	189.6	187.0	194.2	168.0

Notes:

1. All capacities shown are gross and have not considered indoor fan heat. To obtain NET cooling capacity subtract indoor fan heat. For indoor fan heat formula, refer to appropriate airflow table notes.
2. MBh = Total Gross Capacity
3. SHC = Sensible Heat Capacity
4. *Indicates both downflow and horizontal units.

(a) For 3500, 4200, and 4900 cfm-Unit applications below 320 cfm/ton are only applicable to Constant Volume THD models without electric heat and YHD models equipped with modulating gas heat. See below for restrictions:
- Electric heaters on applications below 320 cfm/ton.
- Frostat and Crankcase heaters are required on applications below 320 cfm/ton.
- Multi-speed, single zone VAV or multi-zone VAV applications are capable of running below 320 cfm/ton during low speed airflow operation, but "full" airflow must be set to 320 cfm/ton or higher.

Table 35. Gross cooling capacities 17½ tons three phase dehumidification (hot gas reheat) option high efficiency T/YHD210G3,4,W (Digit 22 = B)

Air Flow cfm[a]	Ent DB (°F)	Ambient Temperature																	
		85						95						105					
		Entering Wet Bulb																	
		61		67		73		61		67		73		61		67		73	
		MBh	SHC	MBh	SHC	MBh	SHC	MBh	SHC	MBh	SHC	MBh	SHC	MBh	SHC	MBh	SHC	MBh	SHC
3500	75	157.6	122.6	174.5	95.9	196.1	56.8	151.2	119.5	166.8	93.6	187.2	55.2	143.7	115.7	158.2	90.5	177.3	53.0
	80	160.6	140.5	174.2	120.6	192.5	88.1	154.0	136.7	166.5	117.6	183.6	85.9	146.5	132.2	157.8	113.8	173.6	83.0
	85	165.2	154.7	175.6	141.4	190.7	115.7	158.6	150.2	167.8	137.7	181.7	112.8	151.0	145.0	159.0	133.3	171.6	109.2
	90	171.5	165.0	178.7	158.5	190.5	139.5	164.8	159.9	170.8	154.1	181.4	135.9	157.2	154.0	161.9	149.1	171.3	131.6
4550	75	167.1	138.7	182.4	110.5	202.3	69.8	160.1	134.8	174.2	107.4	192.8	67.5	152.2	130.2	164.9	103.5	182.4	64.4
	80	171.1	158.1	183.1	136.6	199.7	102.6	164.0	153.5	174.8	132.7	190.2	99.5	156.0	148.2	165.5	128.2	179.7	95.8
	85	176.7	173.6	185.5	158.8	198.9	131.5	169.6	168.3	177.1	154.3	189.3	127.8	161.4	161.4	167.7	149.1	178.7	123.4
	90	184.0	184.0	189.5	177.3	199.7	156.7	176.8	176.8	181.1	172.1	190.0	152.3	168.6	168.6	171.6	166.2	179.4	147.2
5600	75	174.9	145.5	188.5	116.5	206.7	75.0	167.3	141.2	179.7	113.0	196.7	72.3	158.8	136.2	169.9	108.7	185.7	68.8
	80	179.8	165.5	190.1	143.2	205.1	108.5	172.2	160.6	181.3	139.0	195.1	105.0	163.6	154.9	171.5	134.1	184.0	100.9
	85	186.4	181.8	193.5	166.2	205.3	138.1	178.7	176.1	184.6	161.3	195.1	134.0	170.0	169.7	174.7	155.7	184.0	129.2
	90	194.7	194.2	198.5	185.3	207.0	164.0	186.9	186.9	189.5	179.8	196.8	159.2	178.1	178.1	179.6	173.5	185.7	153.7
6300	75	179.1	151.4	191.5	121.6	208.6	79.4	171.1	146.7	182.4	117.7	198.3	76.2	162.2	141.3	172.3	113.1	187.0	72.4
	80	184.6	172.1	193.9	149.1	207.7	113.5	176.6	166.8	184.7	144.5	197.3	109.7	167.7	160.7	174.5	139.1	185.9	105.1
	85	191.9	189.1	197.9	172.7	208.5	143.9	183.8	183.0	188.6	167.4	198.0	139.3	174.8	174.8	178.3	161.4	186.5	134.1
	90	200.8	200.8	203.5	192.6	210.9	170.4	192.6	192.6	194.2	186.6	200.4	165.2	183.5	183.5	183.9	179.9	188.8	159.3
7000	75	182.4	156.5	193.8	125.9	209.8	82.9	174.2	151.4	184.3	121.6	199.1	79.3	164.9	145.6	173.8	116.6	187.4	75.1
	80	188.6	177.9	196.8	154.0	209.5	117.7	180.3	172.1	187.2	149.0	198.8	113.5	171.0	165.6	176.7	143.3	187.0	108.5
	85	196.5	195.5	201.4	178.4	211.0	148.7	188.1	188.1	191.8	172.7	200.1	143.8	178.7	178.7	181.2	166.3	188.3	138.2
	90	206.1	206.1	207.7	198.9	214.1	176.0	197.6	197.6	198.0	192.5	203.1	170.4	185.5	185.5	187.3	185.5	191.2	164.1
7700	75	185.0	160.6	195.3	129.3	210.2	85.5	176.4	155.2	185.4	124.6	199.1	81.5	166.7	149.0	174.6	119.2	187.0	76.9
	80	191.9	182.8	198.9	158.1	210.6	121.0	183.2	176.6	189.0	152.7	199.4	116.4	173.5	169.7	178.0	146.6	187.3	111.0
	85	200.4	200.4	204.2	183.1	212.6	152.7	191.6	191.6	194.2	177.1	201.4	147.4	181.9	181.9	183.2	170.3	189.2	141.4
	90	210.6	210.6	211.2	204.4	216.4	180.7	201.8	201.8	201.1	197.6	205.1	174.7	190.0	190.0	190.0	190.0	192.8	168.0
8400	75	186.8	164.0	195.9	131.8	209.7	87.2	177.8	158.1	185.7	126.7	198.3	82.9	167.8	151.5	174.5	120.9	185.9	77.8
	80	194.3	186.8	200.2	161.3	210.8	123.5	185.2	180.2	189.9	155.6	199.3	118.4	175.2	172.9	178.6	149.0	186.8	112.7
	85	203.5	203.5	206.2	187.1	213.5	155.9	194.4	194.4	195.8	180.6	201.9	150.2	184.2	184.2	184.5	173.4	189.3	143.8
	90	214.4	214.4	213.8	209.0	217.9	184.5	201.3	201.3	203.4	201.8	206.2	178.1	191.9	191.9	191.9	191.9	193.6	171.1

Table 35. Gross cooling capacities 17½ tons three phase dehumidification (hot gas reheat) option high efficiency T/YHD210G3,4,W (Digit 22 = B)

Air Flow cfm[a]	Ent DB (°F)	Ambient Temperature																	
		115						120						125					
		Entering Wet Bulb																	
		61		67		73		61		67		73		61		67		73	
		MBh	SHC	MBh	SHC	MBh	SHC	MBh	SHC	MBh	SHC	MBh	SHC	MBh	SHC	MBh	SHC	MBh	SHC
3500	75	135.3	111.1	148.5	86.8	166.4	50.0	130.7	108.6	143.3	84.7	160.6	48.2	125.9	105.9	137.9	82.4	154.5	46.3
	80	138.0	127.0	148.0	109.4	162.7	79.3	133.4	124.2	142.8	106.9	156.8	77.2	128.5	121.1	137.3	104.3	150.8	75.0
	85	142.4	139.2	149.2	128.2	160.6	104.8	137.8	136.0	143.9	125.4	154.8	102.4	132.9	132.6	138.4	122.4	148.6	99.8
	90	148.5	147.5	152.1	143.3	160.3	126.6	143.8	143.8	146.8	140.1	154.3	123.8	138.9	138.9	141.2	136.8	148.2	120.9
4550	75	143.2	124.9	154.8	99.0	171.0	60.6	138.3	119.0	149.3	93.8	164.9	56.2	133.2	118.9	143.6	93.8	158.6	56.2
	80	146.9	142.2	155.2	123.0	168.2	91.3	142.0	135.6	149.7	117.2	162.1	86.3	136.9	135.5	144.0	117.1	155.8	86.2
	85	152.3	152.3	157.4	143.2	167.2	118.3	147.4	147.4	151.9	136.7	161.0	112.5	142.2	142.2	146.1	136.6	154.6	112.4
	90	159.6	159.6	161.2	159.6	167.8	141.4	154.4	154.4	155.7	152.4	161.6	134.9	149.8	149.8	149.8	149.8	155.1	134.9
5600	75	149.3	130.5	159.2	103.8	173.8	64.6	144.2	127.4	153.5	101.1	167.4	62.3	138.8	124.1	147.5	98.2	160.8	59.8
	80	154.0	148.5	160.7	128.5	172.0	96.1	148.8	145.0	154.9	125.4	165.6	93.4	143.4	141.4	148.9	122.2	159.0	90.5
	85	160.4	160.4	163.8	149.4	171.9	123.7	155.2	155.2	158.0	146.0	165.5	120.6	149.7	149.7	151.9	142.4	158.8	117.4
	90	168.4	168.4	168.6	166.5	173.5	147.5	162.8	162.8	162.8	162.8	167.0	144.1	156.7	156.7	156.7	156.7	160.3	140.6
6300	75	152.4	135.2	161.2	107.7	174.6	67.8	147.0	131.9	155.2	104.8	168.1	65.3	141.5	128.4	149.1	101.7	161.3	62.5
	80	157.7	153.9	163.3	133.1	173.5	99.9	152.4	150.2	157.3	129.9	166.9	97.0	146.8	146.4	151.1	126.4	160.1	94.0
	85	164.7	164.7	167.1	154.7	174.1	128.2	159.4	159.4	161.1	151.1	167.5	125.0	153.7	153.7	154.8	147.3	160.6	121.6
	90	172.5	172.5	172.5	172.5	176.3	152.7	166.5	166.5	166.5	166.5	169.7	149.2	160.2	160.2	160.2	160.2	162.8	145.4
7000	75	154.6	139.1	162.3	110.8	174.7	70.1	149.1	135.5	156.2	107.7	168.0	67.4	143.4	131.9	149.9	104.4	161.0	64.4
	80	160.6	158.4	165.1	136.9	174.2	102.9	155.1	154.6	159.0	133.4	167.5	99.8	149.3	149.3	152.6	129.8	160.5	96.6
	85	168.3	168.3	169.6	159.2	175.4	131.9	162.8	162.8	163.4	155.4	168.7	128.5	156.9	156.9	157.0	151.4	161.6	124.9
	90	175.7	175.7	175.7	175.7	178.3	157.1	169.4	169.4	169.4	169.4	171.5	153.3	163.0	163.0	163.0	163.0	164.4	149.4
7700	75	156.1	142.0	162.7	113.0	174.0	71.5	150.5	138.3	156.4	109.7	167.1	68.6	144.5	134.4	149.9	106.2	159.9	65.5
	80	162.8	162.1	166.1	139.8	174.2	105.0	157.1	157.1	159.8	136.1	167.2	101.7	151.1	151.1	153.3	132.3	160.0	98.3
	85	171.1	171.1	171.2	162.8	176.0	134.7	165.4	165.4	164.9	158.8	169.0	131.1	159.4	159.4	158.3	154.6	161.8	127.3
	90	178.0	178.0	178.0	178.0	179.5	160.6	171.6	171.6	171.6	171.6	172.5	156.7	165.0	165.0	165.0	165.0	165.3	152.5
8400	75	156.8	144.2	162.3	114.4	172.5	72.1	151.0	140.3	155.8	110.8	165.4	69.0	144.9	136.2	149.1	107.1	158.0	65.6
	80	164.1	164.1	166.4	141.8	173.3	106.3	158.2	158.2	159.9	138.0	166.2	102.8	152.1	152.1	153.1	133.9	158.8	99.1
	85	173.1	173.1	172.1	165.5	175.8	136.7	167.2	167.2	165.6	161.3	168.6	132.8	157.2	157.2	158.8	156.9	161.2	128.8
	90	179.5	179.5	179.5	179.5	180.0	163.3	173.0	173.0	173.0	173.0	172.8	159.1	166.1	166.1	166.1	166.1	165.3	154.8

Notes:

1. All capacities shown are gross and have not considered indoor fan heat. To obtain **NET** cooling capacity subtract indoor fan heat. For indoor fan heat formula, refer to appropriate airflow table notes.
2. MBh = Total Gross Capacity
3. SHC = Sensible Heat Capacity

(a) For 3500, and 4550 cfm-Unit applications below 320 cfm/ton are only applicable to Constant Volume THD models without electric heat and YHD models equipped with modulating gas heat. See below for restrictions:
- Electric heaters on applications below 320 cfm/ton.
- Frostat and Crankcase heaters are required on applications below 320 cfm/ton.
- Multi-speed, single zone VAV or multi-zone VAV applications are capable of running below 320 cfm/ton during low speed airflow operation, but "full" airflow must be set to 320 cfm/ton or higher.

Table 36. Gross cooling capacities 20 tons three phase high efficiency T/YH*240G3,4,W (stage 1)

Air Flow cfm[a]	Ent DB (°F)	Ambient Temperature											
		85						95					
		Entering Wet Bulb											
		61		67		73		61		67		73	
		MBh	SHC	MBh	SHC	MBh	SHC	MBh	SHC	MBh	SHC	MBh	SHC
3200	75	71.7	67.2	76.0	52.7	82.4	24.7	66.8	63.4	70.9	49.4	77.0	21.9
	80	76.1	75.4	78.6	67.1	84.3	49.4	71.3	71.3	73.5	63.4	78.9	46.1
	85	81.1	81.1	82.5	77.1	86.2	65.8	76.3	76.3	77.4	73.1	80.9	62.2
	90	86.3	86.3	87.1	84.6	89.5	77.4	81.4	81.4	82.0	80.5	84.3	73.6
4000	75	73.6	70.6	77.4	56.5	83.2	28.8	68.4	66.4	71.9	52.7	79.9	25.6
	80	78.5	78.5	80.4	71.0	85.6	53.6	73.3	73.3	75.0	66.9	79.9	50.0
	85	83.8	83.8	84.8	81.2	88.0	70.2	78.6	78.6	79.4	76.9	82.3	66.3
	90	89.3	89.3	89.8	89.1	91.8	82.0	84.1	84.1	84.4	84.4	86.2	77.9
4800	75	75.0	73.3	78.2	59.4	85.9	32.1	69.5	68.6	72.5	55.2	80.0	28.5
	80	80.3	80.3	81.8	74.2	86.4	57.1	74.8	74.8	76.1	69.7	80.4	53.0
	85	86.0	86.0	86.6	84.7	89.3	73.9	80.5	80.5	80.9	79.9	83.4	69.6
	90	91.8	91.8	91.9	91.9	93.6	86.0	85.0	85.0	86.2	86.2	87.6	81.4
5600	75	76.0	75.2	78.6	61.6	86.0	34.7	70.2	70.1	72.5	57.1	80.2	30.7
	80	81.7	81.7	82.7	76.6	86.8	59.8	75.9	75.9	76.7	71.7	80.5	55.4
	85	87.8	87.8	87.9	87.3	90.2	76.8	81.0	81.0	81.9	81.9	83.9	72.1
	90	92.0	92.0	93.6	93.6	94.9	89.2	87.0	88.0	87.6	87.6	88.6	84.2
6400	75	76.5	76.3	79.0	63.1	87.0	36.5	70.3	70.3	73.0	58.1	81.0	32.1
	80	82.6	82.6	83.2	78.3	88.0	61.8	76.5	76.5	76.8	73.0	82.5	56.9
	85	88.2	88.2	88.8	88.8	90.6	79.0	82.0	82.0	82.4	82.4	84.0	73.9
	90	93.5	93.5	94.8	94.8	95.7	91.6	88.2	88.2	88.5	88.5	89.1	86.2
7000	75	76.5	76.5	81.0	63.7	88.0	37.4	70.2	70.2	75.0	58.4	82.0	32.7
	80	83.0	83.0	83.2	79.0	91.0	62.7	76.6	76.6	78.0	73.4	84.0	57.6
	85	89.0	89.0	89.1	89.1	94.0	80.1	82.2	82.2	82.5	82.5	86.0	74.7
	90	95.0	95.0	95.4	95.4	96.0	92.9	88.4	89.0	88.8	88.8	89.1	87.3

Notes:

1. All capacities shown are gross and have not considered indoor fan heat. To obtain NET cooling capacity subtract indoor fan heat. For indoor fan heat formula, refer to appropriate airflow table notes.
2. MBh = Total Gross Capacity
3. SHC = Sensible Heat Capacity
4. *Indicates both downflow and horizontal units.

(a) For 3200, 4000, 4800, and 5600 cfm-Unit applications below 320 cfm/ton are only applicable to Constant Volume THD models without electric heat and YHD models equipped with modulating gas heat. See below for restrictions:
- Electric heaters on applications below 320 cfm/ton.
- Frostat and Crankcase heaters are required on applications below 320 cfm/ton.
- Multi-speed, single zone VAV or multi-zone VAV applications are capable of running below 320 cfm/ton during low speed airflow operation, but "full" airflow must be set to 320 cfm/ton or higher.

Table 37. Gross cooling capacities 20 tons three phase high efficiency T/YH*240G3,4,W (stage 2)

Air Flow cfm[a]	Ent DB (°F)	Ambient Temperature											
		85						95					
		Entering Wet Bulb											
		61		67		73		61		67		73	
		MBh	SHC	MBh	SHC	MBh	SHC	MBh	SHC	MBh	SHC	MBh	SHC
3200	75	147.4	116.5	161.9	94.0	179.6	54.5	139.3	111.3	153.0	89.7	169.9	51.2
	80	150.8	130.2	164.3	114.7	181.0	87.0	142.8	124.5	155.5	109.7	171.4	82.9
	85	155.8	141.5	166.7	130.2	182.4	110.0	147.8	135.4	158.0	124.7	172.9	105.2
	90	161.9	151.4	170.9	142.5	183.7	127.2	153.7	144.9	162.2	136.6	174.4	121.9
4000	75	155.6	127.1	171.7	103.0	185.5	61.7	147.0	121.3	162.1	98.1	175.3	57.9
	80	160.1	142.0	172.3	125.2	187.9	96.0	151.5	135.8	163.0	119.7	177.7	91.4
	85	165.9	154.4	175.7	141.9	190.2	120.5	157.3	147.7	166.4	135.9	180.2	115.2
	90	172.5	165.2	180.7	155.4	192.5	138.9	163.9	158.2	171.5	148.9	182.6	133.1
4800	75	162.5	136.3	177.1	110.6	195.7	67.6	153.4	130.0	167.0	105.3	184.6	63.2
	80	167.9	152.5	178.9	134.3	196.1	103.6	158.8	145.7	169.0	128.3	185.3	98.5
	85	174.5	166.0	183.2	152.3	196.6	129.6	165.4	158.8	173.5	145.8	186.0	123.8
	90	181.8	177.7	189.1	166.9	199.9	149.3	172.6	170.2	179.3	159.9	189.4	143.0
5600	75	168.0	144.2	181.2	116.9	198.4	72.1	158.3	137.4	170.5	111.0	186.8	67.2
	80	174.3	161.7	184.1	142.1	200.0	109.9	164.7	154.3	173.7	135.6	188.6	104.2
	85	181.7	176.2	189.4	161.4	201.6	137.4	172.0	168.4	179.1	154.3	190.5	131.1
	90	189.6	188.8	196.1	177.1	205.9	158.4	179.9	179.9	185.7	169.6	194.9	151.5
6400	75	172.1	150.7	183.8	121.9	199.6	75.3	161.8	143.4	172.6	115.5	187.5	69.9
	80	179.3	169.5	187.9	148.6	202.4	114.9	169.2	161.6	177.0	141.5	190.5	108.7
	85	187.5	185.1	194.2	169.2	205.2	143.9	177.3	176.8	183.3	161.6	193.5	137.0
	90	196.0	196.0	201.6	185.9	210.4	166.2	185.8	185.8	190.7	177.9	198.9	158.8
7000	75	174.2	154.7	184.8	124.8	199.6	76.8	163.5	147.0	173.2	117.9	190.8	71.0
	80	182.2	174.4	189.9	152.6	203.3	117.8	171.6	166.2	178.5	145.1	191.0	111.1
	85	190.9	190.8	196.8	174.1	207.0	147.9	180.3	180.3	185.5	166.1	194.9	140.6
	90	199.9	199.9	204.9	191.6	212.9	171.1	189.3	189.3	193.6	183.2	201.0	163.3

Notes:

1. All capacities shown are gross and have not considered indoor fan heat. To obtain NET cooling capacity subtract indoor fan heat. For indoor fan heat formula, refer to appropriate airflow table notes.
2. MBh = Total Gross Capacity
3. SHC = Sensible Heat Capacity
4. *Indicates both downflow and horizontal units.

(a) For 3200, 4000, 4800, and 5600 cfm-Unit applications below 320 cfm/ton are only applicable to Constant Volume THD models without electric heat and YHD models equipped with modulating gas heat. See below for restrictions:
- Electric heaters on applications below 320 cfm/ton.
- Frostat and Crankcase heaters are required on applications below 320 cfm/ton.
- Multi-speed, single zone VAV or multi-zone VAV applications are capable of running below 320 cfm/ton during low speed airflow operation, but "full" airflow must be set to 320 cfm/ton or higher.

Table 38. Gross cooling capacities 20 tons three phase high efficiency T/YH*240G3,4,W (full load)

Air Flow cfm[a]	Ent DB (°F)	Ambient Temperature																	
		85						95						105					
		Entering Wet Bulb																	
		61		67		73		61		67		73		61		67		73	
		MBh	SHC	MBh	SHC	MBh	SHC	MBh	SHC	MBh	SHC	MBh	SHC	MBh	SHC	MBh	SHC	MBh	SHC
4000	75	204.7	159.8	224.3	126.6	248.0	69.4	194.8	153.5	213.3	121.7	235.9	66.2	184.1	146.6	201.4	116.3	223.0	62.4
	80	209.6	179.2	227.5	156.5	249.7	116.6	199.7	172.0	216.5	150.5	237.6	112.1	189.0	164.2	204.7	143.9	224.8	106.9
	85	217.0	194.6	230.8	178.3	251.4	149.6	206.9	186.7	219.8	171.4	239.4	143.9	195.9	178.1	208.0	163.9	226.5	137.7
	90	225.7	207.7	236.9	195.3	253.2	173.8	215.3	199.2	225.7	187.6	241.1	167.2	204.1	190.1	213.7	179.4	228.2	160.0
4800	75	214.2	171.5	232.6	137.1	255.1	78.6	203.7	164.6	225.1	131.7	242.5	74.8	192.4	157.1	212.5	125.6	229.0	70.4
	80	220.0	191.9	236.7	168.2	257.7	127.2	209.5	184.0	225.1	161.6	245.1	122.0	198.1	175.6	212.7	154.4	231.6	116.3
	85	228.0	208.1	240.9	191.0	260.3	161.4	217.3	199.6	229.2	183.5	247.7	155.1	205.7	190.4	216.8	175.4	234.2	148.2
	90	237.3	221.9	247.6	208.8	262.9	186.5	226.3	212.8	235.9	200.6	250.2	179.3	214.5	203.1	223.2	191.7	236.7	171.5
5600	75	222.7	182.1	243.9	146.6	261.2	86.7	211.5	174.6	231.5	140.5	248.0	82.3	199.6	166.5	218.3	133.9	233.9	77.4
	80	229.3	203.5	244.8	178.8	264.7	136.7	218.1	195.0	232.6	171.6	251.4	130.9	206.2	186.0	219.5	163.8	237.3	124.6
	85	237.9	220.6	249.8	202.6	268.1	172.0	226.6	211.4	237.6	194.5	254.8	165.1	214.5	201.7	224.5	185.8	240.7	157.6
	90	247.8	235.1	257.3	221.2	271.6	198.1	236.2	225.3	244.9	212.4	258.3	190.3	223.7	215.0	231.6	203.0	244.2	181.9
6400	75	230.0	191.6	249.9	154.9	274.8	93.8	218.3	183.5	236.8	148.3	260.5	88.8	205.7	174.8	223.0	141.0	245.5	83.2
	80	237.5	214.0	251.8	188.3	274.8	145.1	225.7	204.9	239.0	180.5	260.7	138.7	213.1	195.3	225.3	172.1	245.9	131.8
	85	246.8	231.9	257.6	213.1	274.8	181.6	234.9	222.1	244.8	204.4	260.9	174.1	222.1	211.8	231.1	195.1	246.2	166.0
	90	257.2	247.1	265.8	232.6	279.1	208.6	245.0	236.8	252.8	223.1	265.2	200.2	231.9	225.9	239.0	213.1	250.5	191.2
7200	75	236.2	200.1	254.7	162.2	278.3	99.8	223.9	191.4	241.1	155.0	263.4	94.2	210.7	182.0	226.6	147.1	247.8	88.0
	80	244.5	223.4	257.7	196.7	279.4	152.5	232.2	213.7	244.3	188.3	264.7	145.5	219.0	203.5	230.0	179.4	249.2	137.9
	85	254.6	242.2	264.4	222.5	280.4	190.0	242.0	231.8	250.9	213.2	265.9	181.9	228.7	220.8	236.7	203.3	250.6	173.3
	90	265.5	258.1	273.2	242.8	285.6	218.1	252.6	247.2	259.6	232.8	271.1	209.1	239.0	235.6	245.2	222.2	255.8	199.5
8000	75	241.4	207.5	258.4	168.5	280.7	104.7	228.4	198.1	244.2	160.6	265.2	98.5	214.6	188.2	229.1	152.1	249.0	91.7
	80	250.5	231.7	262.5	204.1	282.8	158.7	237.6	221.5	248.5	195.1	267.5	151.1	223.8	210.7	233.6	185.5	251.4	143.0
	85	261.2	251.3	270.1	230.8	284.9	197.4	248.1	240.4	256.0	220.9	269.8	188.7	234.1	228.8	241.1	210.5	253.9	179.4
	90	272.7	268.0	279.6	252.0	291.0	226.5	259.2	256.5	265.4	241.4	275.8	216.9	245.0	244.3	250.3	230.2	259.9	206.7
8800	75	245.4	213.8	261.1	173.6	282.0	108.5	231.9	203.8	246.2	165.1	265.9	101.7	217.5	193.3	230.6	156.1	249.1	94.3
	80	255.4	239.0	266.2	210.4	285.2	163.9	241.8	228.2	251.6	200.8	269.3	155.7	227.4	216.7	236.1	190.6	252.6	146.9
	85	266.8	259.4	274.6	238.1	288.4	203.8	253.0	247.9	259.9	227.6	272.6	194.4	238.5	235.7	244.4	216.5	256.1	184.6
	90	278.8	276.8	284.8	260.1	295.2	233.8	264.7	264.7	270.0	248.9	279.5	223.6	249.9	249.9	254.3	237.1	263.0	212.8
9600	75	248.4	219.0	262.6	177.6	282.2	111.2	234.2	208.4	247.2	168.6	265.5	103.8	219.2	197.3	230.9	158.9	248.1	95.8
	80	259.2	245.2	268.8	215.6	286.4	168.0	245.0	233.7	253.6	205.4	270.0	159.2	230.0	221.7	237.5	194.6	252.6	149.8
	85	271.3	266.5	278.1	244.3	290.7	209.0	256.9	254.3	262.8	233.2	274.4	199.1	241.7	241.5	246.7	221.5	257.2	188.6
	90	283.8	283.8	289.0	267.2	298.4	240.0	269.1	269.1	273.5	255.3	282.1	229.2	253.7	253.7	257.3	242.9	264.9	217.8

Table 38. Gross cooling capacities 20 tons three phase high efficiency T/YH*240G3,4,W (full load)

Air Flow cfm[a]	Ent DB (°F)	Ambient Temperature																	
		115						120						125					
		Entering Wet Bulb																	
		61		67		73		61		67		73		61		67		73	
		MBh	SHC	MBh	SHC	MBh	SHC	MBh	SHC	MBh	SHC	MBh	SHC	MBh	SHC	MBh	SHC	MBh	SHC
4000	75	172.5	139.1	188.8	110.3	209.3	58.1	166.4	135.1	182.1	107.1	202.2	55.7	160.1	131.0	175.3	103.7	194.8	53.1
	80	177.4	155.8	192.0	136.8	211.0	101.2	171.3	151.4	185.4	133.0	203.9	98.1	164.9	146.8	178.5	129.1	196.5	94.9
	85	184.2	169.0	195.3	155.9	212.8	130.8	178.0	164.3	188.6	151.7	205.6	127.2	171.6	159.4	181.8	147.3	198.2	123.4
	90	192.0	180.4	200.9	170.7	214.5	152.2	185.7	175.3	194.2	166.1	207.3	148.1	179.1	170.1	187.2	161.3	199.9	143.9
4800	75	180.2	149.0	199.0	119.0	214.7	65.5	173.8	144.7	192.0	115.5	207.2	62.8	167.2	140.3	184.7	111.8	199.6	60.0
	80	185.9	166.6	199.4	146.7	217.3	110.0	179.5	161.9	192.4	142.6	209.8	106.6	172.9	157.1	185.3	138.4	202.1	103.1
	85	193.4	180.7	203.5	166.8	219.8	140.7	186.9	175.7	196.5	162.2	212.3	136.8	180.2	170.5	189.4	157.5	204.7	132.7
	90	201.8	192.8	209.8	182.4	222.4	163.1	195.2	187.4	202.7	177.5	214.9	158.7	188.3	181.9	195.5	172.4	207.2	154.2
5600	75	186.8	157.8	204.2	126.7	219.0	71.8	180.1	153.2	196.9	122.8	211.2	68.8	173.2	148.5	189.3	118.9	203.2	65.7
	80	193.4	176.4	205.6	155.5	222.4	117.6	186.6	171.4	198.4	151.1	214.6	114.0	179.7	166.2	190.9	146.5	206.6	110.1
	85	201.5	191.3	210.6	176.5	225.8	149.6	194.7	186.0	203.3	171.7	218.0	145.3	187.7	180.5	195.9	166.7	210.0	141.0
	90	210.5	204.1	217.6	193.0	229.2	172.9	203.5	198.5	210.2	187.8	221.4	168.3	196.4	192.7	202.7	182.4	213.4	163.4
6400	75	192.3	165.5	208.3	133.2	229.6	77.1	185.3	160.6	200.7	129.1	221.3	73.8	178.1	155.6	192.8	124.8	212.9	70.3
	80	199.7	185.1	210.8	163.2	230.1	124.3	192.7	179.8	203.3	158.5	222.0	120.3	185.5	174.3	195.5	153.7	213.6	116.1
	85	208.5	200.9	216.6	185.2	230.7	157.3	201.4	195.2	209.1	180.1	222.6	152.8	194.1	189.4	201.3	174.8	214.3	148.1
	90	218.0	214.4	224.3	202.5	235.0	181.7	210.8	208.4	216.7	197.0	226.9	176.7	203.3	202.3	208.8	191.4	218.6	171.5
7200	75	196.7	172.1	211.3	138.7	231.3	81.2	189.4	167.0	203.4	134.3	222.7	77.7	181.9	161.7	195.2	129.7	213.9	73.9
	80	205.0	192.7	214.9	169.8	232.9	129.8	197.7	187.1	207.0	164.8	224.4	125.5	190.1	181.4	199.0	159.7	215.7	121.1
	85	214.5	209.3	221.6	192.9	234.5	164.0	207.1	203.4	213.7	187.4	226.1	159.2	199.4	197.2	205.6	181.8	217.5	154.2
	90	224.5	223.5	229.9	211.0	239.6	189.3	216.9	216.9	222.0	205.2	231.2	184.0	209.2	209.2	213.8	199.2	222.6	178.6
8000	75	200.0	177.7	213.3	143.1	231.9	84.3	192.4	172.2	205.0	138.4	223.0	80.4	184.6	166.6	196.5	133.5	213.9	76.4
	80	209.1	199.3	217.9	175.4	234.5	134.2	201.5	193.4	209.7	170.1	225.7	129.6	193.7	187.3	201.3	164.7	216.7	124.9
	85	219.3	216.7	225.4	199.4	237.1	169.6	211.6	210.4	217.2	193.6	228.5	164.4	203.7	203.7	208.8	187.8	219.6	159.2
	90	229.9	229.9	234.4	218.4	243.1	195.9	222.0	222.0	226.2	212.3	234.4	190.3	214.0	214.0	217.7	206.0	225.5	184.6
8800	75	202.2	182.2	214.1	146.4	231.3	86.3	194.3	176.4	205.5	141.4	222.2	82.2	186.2	170.5	196.7	136.2	213.5	77.8
	80	212.2	204.7	219.7	179.9	235.0	137.6	204.3	198.5	211.3	174.3	226.0	132.7	196.1	192.1	202.6	168.5	217.0	127.7
	85	223.1	223.0	228.1	204.8	238.7	174.1	215.0	215.0	219.6	198.8	229.7	168.7	206.8	206.8	211.0	192.6	220.5	163.1
	90	234.2	234.2	237.8	224.7	245.6	201.4	226.0	226.0	229.3	218.3	236.6	195.5	217.6	217.6	220.5	211.7	227.4	189.5
9600	75	203.4	185.6	216.0	148.7	233.2	87.3	195.1	179.5	207.0	143.3	224.1	82.8	186.7	173.3	198.0	137.9	213.0	78.1
	80	214.2	209.1	220.5	183.2	236.2	139.9	205.9	202.6	211.8	177.4	227.0	134.7	197.5	195.9	202.8	171.3	218.0	129.4
	85	225.7	225.7	229.8	209.2	239.2	177.5	217.4	217.4	221.0	202.9	229.9	171.8	208.9	208.9	212.0	196.4	223.0	165.9
	90	237.4	237.4	240.2	229.9	246.9	205.8	228.9	228.9	231.3	223.2	237.6	199.6	220.2	220.2	222.3	216.3	228.1	193.3

Notes:

1. All capacities shown are gross and have not considered indoor fan heat. To obtain NET cooling capacity subtract indoor fan heat. For indoor fan heat formula, refer to appropriate airflow table notes.
2. MBh = Total Gross Capacity
3. SHC = Sensible Heat Capacity
4. *Indicates both downflow and horizontal units.

(a) For 4000, 4800, and 5600 cfm-Unit applications below 320 cfm/ton are only applicable to Constant Volume THD models without electric heat and YHD models equipped with modulating gas heat. See below for restrictions:
- Electric heaters on applications below 320 cfm/ton.
- Frostat and Crankcase heaters are required on applications below 320 cfm/ton.
- Multi-speed, single zone VAV or multi-zone VAV applications are capable of running below 320 cfm/ton during low speed airflow operation, but "full" airflow must be set to 320 cfm/ton or higher.

Table 39. Gross cooling capacities 20 tons three phase dehumidification (hot gas reheat) option high efficiency T/YHD240G3,4,W (Digit 22 = B)

Air Flow cfm[a]	Ent DB (°F)	Ambient Temperature																	
		85						95						105					
		Entering Wet Bulb																	
		61		67		73		61		67		73		61		67		73	
		MBh	SHC	MBh	SHC	MBh	SHC	MBh	SHC	MBh	SHC	MBh	SHC	MBh	SHC	MBh	SHC	MBh	SHC
4000	75	203.7	145.0	228.5	96.2	259.7	90.9	193.4	139.5	217.0	92.5	247.0	86.4	182.4	133.4	204.8	88.3	233.5	81.7
	80	206.0	171.4	227.3	134.7	254.8	89.2	195.8	164.9	215.8	130.0	242.1	84.7	184.8	157.8	203.6	124.6	228.6	80.0
	85	210.1	191.8	227.8	167.0	251.7	118.8	199.9	184.2	216.3	161.3	239.0	114.9	189.0	176.0	204.1	154.9	225.5	110.4
	90	216.1	206.0	230.1	193.2	250.4	157.1	205.9	197.4	218.6	186.5	237.7	152.1	194.9	188.2	206.4	179.1	224.2	146.5
5200	75	218.6	159.9	241.6	108.8	271.0	94.8	207.5	153.9	229.3	104.6	257.4	90.1	195.7	147.3	216.2	99.8	243.0	85.1
	80	222.2	188.3	241.6	149.2	267.3	93.6	211.1	181.3	229.3	144.0	253.7	88.8	199.3	173.6	216.2	138.2	239.4	83.8
	85	227.6	210.6	243.4	183.5	265.5	133.0	216.5	202.5	231.1	177.3	251.9	128.6	204.7	193.8	218.0	170.4	237.6	123.5
	90	234.8	226.8	247.0	211.7	265.4	173.2	223.7	217.7	234.6	204.4	251.9	167.7	211.9	207.9	221.6	196.5	237.5	161.6
6400	75	231.3	173.2	252.5	119.7	280.0	98.0	219.3	166.7	239.3	115.1	265.5	92.9	206.6	159.6	225.3	109.8	250.3	87.6
	80	236.2	203.6	253.7	162.1	277.6	97.2	224.2	196.0	240.5	156.4	263.2	93.4	211.5	187.9	226.6	150.1	248.0	88.8
	85	242.8	227.8	256.8	198.4	277.0	145.5	230.9	219.3	243.6	191.6	262.6	140.6	218.2	210.0	229.7	184.2	247.4	135.0
	90	251.2	245.9	261.6	228.5	278.2	187.7	239.3	236.3	248.4	220.7	263.8	181.7	226.7	226.1	234.5	212.3	248.6	175.1
7200	75	238.5	181.2	258.5	126.2	284.8	99.7	226.0	174.4	244.7	121.2	269.7	94.4	212.7	166.9	230.2	115.5	253.9	88.9
	80	244.2	212.9	260.6	169.9	283.2	103.4	231.7	205.0	246.8	163.8	268.2	99.2	218.5	196.5	232.3	157.1	252.4	94.3
	85	251.7	238.4	264.4	207.4	283.5	153.0	239.2	229.5	250.7	200.3	268.4	147.7	226.0	220.0	236.2	192.6	252.7	141.8
	90	261.0	257.9	270.1	238.9	285.5	196.5	248.5	247.9	256.3	230.7	270.5	190.2	235.3	235.3	241.9	222.0	254.7	183.2
8000	75	244.8	188.5	263.5	131.9	288.6	101.0	231.7	181.3	249.2	126.5	272.9	95.5	217.8	173.5	234.1	120.5	256.6	89.8
	80	251.3	221.5	266.4	176.9	287.8	108.9	238.2	213.2	252.1	170.5	272.2	104.3	224.4	204.4	237.0	163.5	255.9	99.1
	85	259.6	248.3	271.1	215.8	288.9	159.8	246.5	239.1	256.8	208.3	273.3	154.2	232.7	229.2	241.7	200.2	257.0	147.9
	90	269.7	269.0	277.6	248.5	291.8	204.5	256.7	256.7	263.3	240.0	276.2	197.9	242.9	242.9	248.2	230.9	259.9	190.6
8800	75	250.0	195.1	267.5	136.9	291.3	102.0	236.3	187.5	252.6	131.2	275.2	96.3	221.9	179.4	236.9	124.9	258.2	90.4
	80	257.4	229.3	271.3	183.2	291.5	113.6	243.7	220.8	256.4	176.5	275.3	108.7	229.3	211.6	240.7	169.1	258.4	103.2
	85	266.5	257.5	276.8	223.4	293.4	165.8	252.9	247.9	261.9	215.6	277.2	159.9	238.5	237.7	246.3	207.2	260.3	153.3
	90	277.5	277.5	284.1	257.4	297.1	211.9	263.8	263.8	269.2	248.6	280.9	204.9	249.5	249.5	253.6	239.2	264.0	197.3
9600	75	254.3	200.9	270.6	141.2	293.1	102.6	240.0	193.1	255.1	135.2	276.4	96.7	225.0	184.6	238.8	128.5	258.9	90.6
	80	262.5	236.5	275.1	188.8	294.1	117.7	248.2	227.6	259.7	181.7	277.4	112.4	233.3	218.1	243.4	174.0	259.9	106.5
	85	272.4	266.0	281.5	230.3	296.8	171.2	258.2	256.0	266.0	222.2	280.1	164.9	243.3	243.3	249.8	213.4	262.6	157.9
	90	284.2	284.2	289.6	265.7	301.4	218.6	270.0	270.0	274.2	256.5	284.7	211.2	255.1	255.1	258.0	246.7	267.2	203.2

Table 39. Gross cooling capacities 20 tons three phase dehumidification (hot gas reheat) option high efficiency T/YHD240G3,4,W (Digit 22 = B)

Air Flow cfm[b]	Ent DB (°F)	Ambient Temperature																	
		115						120						125					
		Entering Wet Bulb																	
		61		67		73		61		67		73		61		67		73	
		MBh	SHC	MBh	SHC	MBh	SHC	MBh	SHC	MBh	SHC	MBh	SHC	MBh	SHC	MBh	SHC	MBh	SHC
4000	75	170.7	126.7	191.8	83.3	219.2	76.7	164.5	123.1	185.0	80.6	211.8	74.1	158.2	119.3	178.1	77.8	204.2	71.5
	80	173.1	150.0	190.6	118.7	214.4	75.0	166.9	145.9	183.8	115.5	207.0	72.4	160.6	141.6	176.8	112.1	199.4	69.8
	85	177.3	167.2	191.1	147.9	211.3	105.2	171.1	162.6	184.4	144.2	203.9	102.4	164.8	157.7	177.4	140.3	196.3	99.4
	90	183.2	178.3	193.5	171.0	210.0	140.3	177.1	173.1	186.7	166.8	202.6	137.0	170.8	167.8	179.8	162.3	195.1	133.5
5200	75	183.1	140.0	202.3	94.4	227.9	79.8	176.5	136.2	195.1	91.4	220.1	77.0	169.7	132.1	187.7	88.3	212.0	74.2
	80	186.7	165.3	202.4	131.7	224.3	78.5	180.1	160.9	195.2	128.2	216.5	75.8	173.4	156.4	187.8	124.6	208.4	73.0
	85	192.1	184.5	204.2	162.9	222.5	117.8	185.6	179.6	197.0	158.9	214.7	114.7	178.8	174.5	189.6	154.7	206.7	111.5
	90	199.4	197.5	207.8	187.9	222.5	154.9	192.8	192.1	200.6	183.4	214.6	151.3	186.1	186.1	193.2	178.7	206.6	147.5
6400	75	193.2	151.8	210.6	103.8	234.3	82.0	186.2	147.7	203.0	100.6	226.1	79.1	179.0	143.4	195.2	97.2	217.6	76.2
	80	198.1	179.1	211.9	143.1	232.0	83.6	191.1	174.4	204.3	139.3	223.7	80.8	183.9	169.6	196.5	135.4	215.3	77.8
	85	204.8	200.2	215.0	176.2	231.4	128.8	197.8	195.0	207.4	172.0	223.2	125.5	190.6	189.7	199.5	167.5	214.8	122.0
	90	213.3	213.3	219.8	203.2	232.7	167.8	206.3	206.3	212.2	198.5	224.4	164.0	199.1	199.1	204.4	193.5	216.0	160.0
7200	75	198.7	158.8	214.9	109.2	237.4	83.1	191.4	154.5	207.0	105.8	228.9	80.1	183.9	150.0	198.9	102.3	220.1	77.0
	80	204.4	187.3	217.0	149.8	235.9	88.8	197.2	182.5	209.1	145.9	227.4	85.8	189.7	177.5	201.0	141.8	218.6	82.6
	85	212.0	209.8	220.9	184.2	236.2	135.3	204.7	204.4	213.0	179.8	227.6	131.7	197.2	197.2	204.9	175.2	218.9	128.1
	90	221.3	221.3	226.6	212.5	238.2	175.6	214.0	214.0	218.7	207.6	229.7	171.6	206.6	206.6	210.6	202.5	221.0	167.4
8000	75	203.2	165.0	218.2	113.9	239.5	83.8	195.7	160.6	210.0	110.3	230.6	80.7	187.9	155.9	201.6	106.6	221.6	77.6
	80	209.8	194.9	221.2	155.8	238.8	93.2	202.2	189.9	213.0	151.7	230.0	90.1	194.5	184.7	204.6	147.5	221.0	86.7
	85	218.2	218.2	225.9	191.5	239.9	141.0	210.6	210.6	217.7	186.9	231.1	137.3	202.9	202.9	209.3	182.2	222.1	133.5
	90	228.3	228.3	232.4	221.2	242.8	182.7	220.8	220.8	224.2	216.0	234.0	178.4	213.0	213.0	215.9	210.8	225.0	174.1
8800	75	206.8	170.6	220.5	117.9	240.6	84.2	198.9	165.9	212.0	114.2	231.4	81.0	190.9	161.1	203.3	110.3	222.1	77.7
	80	214.2	201.7	224.3	161.1	240.7	97.0	206.3	196.6	215.8	156.8	231.6	93.6	198.3	191.2	207.1	152.4	222.3	90.1
	85	223.4	223.4	229.9	198.1	242.7	146.0	215.5	215.5	221.4	193.3	233.6	142.2	207.5	207.5	212.7	188.4	224.3	138.1
	90	234.3	234.3	237.2	229.1	246.4	189.0	226.5	226.5	228.8	223.8	237.3	184.6	217.9	217.9	220.1	218.3	228.0	180.1
9600	75	209.3	175.4	221.8	121.2	240.6	84.2	201.2	170.6	213.0	117.3	231.2	80.9	192.8	165.6	204.1	113.2	221.6	77.6
	80	217.5	207.9	226.4	165.6	241.6	100.0	209.4	202.5	217.7	161.2	232.2	96.5	201.1	197.0	208.7	156.6	222.6	92.8
	85	227.6	227.6	232.8	204.0	244.4	150.4	219.4	219.4	224.1	199.1	235.0	146.3	211.1	211.1	215.1	194.0	225.4	142.1
	90	239.4	239.4	241.0	236.2	249.0	194.6	230.0	230.0	232.3	230.8	239.6	190.1	223.3	223.3	223.3	223.3	230.0	185.3

Notes:

1. All capacities shown are gross and have not considered indoor fan heat. To obtain **NET** cooling capacity subtract indoor fan heat. For indoor fan heat formula, refer to appropriate airflow table notes.
2. MBh = Total Gross Capacity
3. SHC = Sensible Heat Capacity[a]

(a) For 4000, and 5200 cfm-Unit applications below 320 cfm/ton are only applicable to Constant Volume THD models without electric heat and YHD models equipped with modulating gas heat. See below for restrictions:
- Electric heaters on applications below 320 cfm/ton.
- Frostat and Crankcase heaters are required on applications below 320 cfm/ton.
- Multi-speed, single zone VAV or multi-zone VAV applications are capable of running below 320 cfm/ton during low speed airflow operation, but "full" airflow must be set to 320 cfm/ton or higher.

(b) For 4000, and 5200 cfm-Unit applications below 320 cfm/ton are only applicable to Constant Volume THD models without electric heat and YHD models equipped with modulating gas heat. See below for restrictions:
- Electric heaters on applications below 320 cfm/ton.
- Frostat and Crankcase heaters are required on applications below 320 cfm/ton.
- Multi-speed, single zone VAV or multi-zone VAV applications are capable of running below 320 cfm/ton during low speed airflow operation, but "full" airflow must be set to 320 cfm/ton or higher.

Table 40. Gross cooling capacities 25 tons three phase high efficiency T/YH*300G3,4,W (stage 1)

Air Flow cfm[a]	Ent DB (°F)	Ambient Temperature											
		85						95					
		Entering Wet Bulb											
		61		67		73		61		67		73	
		MBh	SHC	MBh	SHC	MBh	SHC	MBh	SHC	MBh	SHC	MBh	SHC
4000	75	80.5	78.0	85.7	62.9	93.7	32.5	75.1	73.7	80.0	59.3	87.7	29.5
	80	85.2	85.2	87.8	78.2	94.6	59.2	79.7	79.7	82.1	74.1	88.6	55.8
	85	90.1	90.1	91.3	88.2	95.4	76.5	84.6	84.6	85.6	83.8	89.4	72.6
	90	94.9	94.9	95.3	95.3	97.8	88.2	89.3	89.3	89.5	89.5	91.8	83.9
5000	75	83.0	82.1	87.6	67.4	95.0	37.4	77.3	77.3	81.6	63.4	88.7	34.1
	80	88.1	88.1	90.2	82.7	96.3	64.2	82.3	82.3	84.2	78.3	90.0	60.3
	85	93.3	93.3	94.0	92.9	97.6	81.6	87.5	87.5	88.0	88.0	91.3	77.2
	90	98.3	98.3	98.3	98.3	100.3	93.3	92.0	92.0	92.2	92.2	94.0	88.7
6000	75	85.1	85.1	89.0	71.1	95.7	41.5	79.1	79.1	82.7	66.7	89.2	37.8
	80	90.5	90.5	92.0	86.5	97.5	68.3	84.5	84.5	85.8	81.6	90.9	64.1
	85	96.0	96.0	96.2	96.2	99.2	85.8	89.9	89.9	89.9	89.9	92.7	81.1
	90	99.8	99.8	100.8	100.8	102.3	97.7	94.0	94.0	94.4	94.4	95.8	92.6
7000	75	86.6	86.6	89.8	74.0	96.0	44.9	80.3	80.3	83.3	69.2	89.5	40.7
	80	92.4	92.4	93.4	89.5	98.2	71.7	86.1	86.1	86.8	84.2	91.3	67.0
	85	96.0	96.0	97.9	97.9	100.4	89.2	91.0	91.0	91.3	91.3	93.6	84.1
	90	101.0	101.0	102.8	102.8	103.8	101.2	95.8	95.8	96.1	96.1	97.0	95.8
8000	75	87.7	87.7	90.2	76.1	98.2	47.4	81.1	81.1	83.3	70.9	91.0	42.9
	80	93.8	93.8	94.2	91.6	98.4	74.2	87.2	87.2	87.3	86.0	92.0	69.1
	85	98.4	98.4	99.1	99.1	101.0	91.8	92.0	92.0	92.2	92.2	93.9	86.3
	90	103.7	103.7	104.2	104.2	104.8	104.0	96.0	96.0	97.3	97.3	97.7	97.7
8750	75	88.1	88.1	91.0	77.1	98.5	48.8	81.3	81.3	84.0	71.6	92.0	43.9
	80	94.0	94.0	94.5	92.7	99.0	75.6	87.3	87.3	87.4	86.7	93.5	70.2
	85	99.0	99.0	99.7	99.7	101.2	93.2	92.4	92.4	92.6	92.6	95.0	87.4
	90	104.0	104.0	105.0	105.0	105.2	105.2	97.0	97.0	97.8	97.8	97.9	97.9

Notes:

1. All capacities shown are gross and have not considered indoor fan heat. To obtain NET cooling capacity subtract indoor fan heat. For indoor fan heat formula, refer to appropriate airflow table notes.
2. MBh = Total Gross Capacity
3. SHC = Sensible Heat Capacity
4. *Indicates both downflow and horizontal units.

(a) For 4000, 5000, 6000, and 7000 cfm-Unit applications below 320 cfm/ton are only applicable to Constant Volume THD models without electric heat and YHD models equipped with modulating gas heat. See below for restrictions:
- Electric heaters on applications below 320 cfm/ton.
- Frostat and Crankcase heaters are required on applications below 320 cfm/ton.
- Multi-speed, single zone VAV or multi-zone VAV applications are capable of running below 320 cfm/ton during low speed airflow operation, but "full" airflow must be set to 320 cfm/ton or higher.

Table 41. Gross cooling capacities 25 tons three phase high efficiency T/YH*300G3,4,W (stage 2)

Air Flow cfm[a]	Ent DB (°F)	Ambient Temperature											
		85						95					
		Entering Wet Bulb											
		61		67		73		61		67		73	
		MBh	SHC	MBh	SHC	MBh	SHC	MBh	SHC	MBh	SHC	MBh	SHC
4000	75	135.6	118.7	146.9	92.7	156.4	43.8	127.9	113.4	138.5	88.3	147.4	40.5
	80	140.7	132.3	148.2	116.5	159.0	84.6	132.9	126.3	139.8	111.3	150.0	80.4
	85	146.9	142.2	152.0	132.5	161.5	111.5	138.9	135.7	143.6	126.7	152.5	106.4
	90	153.5	150.3	157.2	144.1	164.1	129.8	145.3	143.4	148.6	137.8	155.0	124.2
5000	75	141.2	127.5	151.3	101.4	165.2	52.4	133.0	121.6	142.4	96.4	155.5	48.5
	80	147.0	141.5	153.5	125.6	165.8	93.7	138.7	134.9	144.5	119.9	156.2	88.8
	85	153.7	151.8	157.9	142.1	166.4	121.0	145.2	144.8	149.0	135.7	156.8	115.4
	90	160.7	160.3	163.6	154.1	169.7	139.7	152.0	152.0	154.5	147.2	160.0	133.5
6000	75	145.8	134.8	154.6	108.6	167.3	59.5	137.0	128.2	145.1	103.0	157.1	55.0
	80	152.2	149.2	157.6	133.2	168.7	101.2	143.4	142.0	148.2	126.9	158.6	95.8
	85	159.4	159.4	162.7	150.1	170.2	128.9	150.4	150.4	153.3	143.2	160.1	122.7
	90	166.8	166.8	169.0	162.6	174.1	148.1	157.6	157.6	159.3	155.1	164.0	141.3
7000	75	149.2	140.5	156.8	114.2	168.3	65.0	140.0	133.4	146.9	108.1	157.6	59.9
	80	156.3	155.3	160.7	139.3	170.6	107.2	147.0	147.0	150.8	132.4	160.0	101.2
	85	164.0	164.0	166.5	156.7	172.9	135.4	154.6	154.6	156.5	149.1	162.3	128.6
	90	171.8	171.8	173.2	169.5	177.5	155.0	162.1	162.1	163.1	161.4	166.8	147.6
8000	75	151.6	144.7	158.0	118.3	169.0	69.0	141.9	137.0	147.5	111.6	158.0	63.4
	80	159.4	159.4	162.7	143.9	171.4	111.7	149.6	149.6	152.2	136.4	160.3	105.1
	85	167.6	167.6	169.1	161.6	174.5	140.3	157.6	157.6	158.7	153.5	163.5	132.9
	90	175.7	175.7	176.4	174.9	179.8	160.3	165.5	165.5	165.7	165.7	168.6	152.3
8750	75	152.7	146.8	158.1	120.4	171.3	71.0	142.6	138.7	147.9	113.2	159.6	64.9
	80	161.0	161.0	163.4	146.3	172.0	114.0	150.8	150.8	152.7	138.3	161.0	107.0
	85	169.5	169.5	170.4	164.3	175.1	142.9	159.2	159.2	159.6	155.8	163.6	135.1
	90	178.0	178.0	178.0	177.9	180.8	163.3	166.0	167.4	167.0	167.0	169.3	154.9

Notes:

1. All capacities shown are gross and have not considered indoor fan heat. To obtain NET cooling capacity subtract indoor fan heat. For indoor fan heat formula, refer to appropriate airflow table notes.
2. MBh = Total Gross Capacity
3. SHC = Sensible Heat Capacity
4. *Indicates both downflow and horizontal units.

(a) For 4000, 5000, 6000, and 7000 cfm-Unit applications below 320 cfm/ton are only applicable to Constant Volume THD models without electric heat and YHD models equipped with modulating gas heat. See below for restrictions:
- Electric heaters on applications below 320 cfm/ton.
- Frostat and Crankcase heaters are required on applications below 320 cfm/ton.
- Multi-speed, single zone VAV or multi-zone VAV applications are capable of running below 320 cfm/ton during low speed airflow operation, but "full" airflow must be set to 320 cfm/ton or higher.

Table 42. Gross cooling capacities 25 tons three phase high efficiency T/YH*300G3,4,W (stage 3)

Air Flow cfm[a]	Ent DB (°F)	Ambient Temperature											
		85						95					
		Entering Wet Bulb											
		61		67		73		61		67		73	
		MBh	SHC	MBh	SHC	MBh	SHC	MBh	SHC	MBh	SHC	MBh	SHC
4000	75	188.9	150.3	205.8	121.4	226.6	71.4	179.7	145.2	195.3	117.2	214.8	68.3
	80	193.3	167.2	208.8	147.0	228.3	111.8	184.1	161.3	198.4	142.0	216.6	107.6
	85	199.5	180.7	211.8	165.8	230.0	140.0	190.3	174.2	201.4	160.0	218.4	135.0
	90	207.0	192.0	217.1	180.3	231.7	160.6	197.5	185.0	206.7	174.0	220.2	154.9
5000	75	199.5	162.2	218.5	131.4	234.4	79.3	189.4	156.2	206.9	126.4	221.8	75.4
	80	204.9	180.5	219.0	158.8	237.2	121.8	194.9	173.8	207.8	153.0	224.7	116.9
	85	212.0	195.3	223.1	179.1	240.0	151.8	202.0	188.0	211.9	172.5	227.6	146.0
	90	220.2	207.7	229.3	194.9	242.7	173.9	209.9	199.9	218.0	187.7	230.4	167.4
6000	75	208.4	172.8	225.7	140.2	247.8	86.1	197.5	166.0	213.4	134.4	234.0	81.4
	80	214.8	192.7	227.6	169.4	248.1	130.7	204.1	185.1	215.6	162.7	234.6	124.9
	85	222.8	208.7	232.7	191.2	248.3	162.4	212.0	200.6	220.8	183.8	235.1	155.8
	90	231.7	222.2	239.8	208.3	252.1	186.0	220.6	213.6	227.8	200.3	239.0	178.7
7000	75	215.6	182.2	231.3	147.8	251.9	91.6	204.0	174.6	218.2	141.2	237.3	86.1
	80	223.2	203.6	234.5	178.8	253.4	138.3	211.6	195.2	221.7	171.3	239.1	131.7
	85	232.0	220.9	240.7	202.1	255.0	171.8	220.4	211.9	228.0	193.8	241.0	164.4
	90	241.6	235.5	248.7	220.5	259.9	197.0	229.7	226.1	235.9	211.7	246.0	188.8
8000	75	221.2	190.4	235.3	154.2	254.3	96.0	208.8	181.9	221.3	146.7	238.9	89.6
	80	229.8	213.3	239.8	187.0	257.1	144.7	217.5	204.1	226.2	178.6	242.0	137.3
	85	239.6	231.8	247.1	211.8	260.0	180.0	227.1	222.1	233.5	202.7	245.2	171.7
	90	249.9	247.6	255.9	231.5	266.0	206.7	237.2	237.2	242.3	221.8	251.3	197.7
8750	75	224.3	195.7	237.2	158.2	255.0	98.4	211.3	186.6	222.6	150.1	239.0	91.4
	80	233.7	219.7	242.7	192.3	258.9	148.8	220.8	209.9	228.5	183.3	243.1	140.7
	85	244.1	239.3	250.8	218.2	262.7	185.4	231.1	228.9	236.6	208.5	247.3	176.5
	90	255.0	255.0	260.3	238.9	269.5	213.2	241.7	241.7	246.1	228.6	254.2	203.5

Notes:

1. All capacities shown are gross and have not considered indoor fan heat. To obtain NET cooling capacity subtract indoor fan heat. For indoor fan heat formula, refer to appropriate airflow table notes.
2. MBh = Total Gross Capacity
3. SHC = Sensible Heat Capacity
4. *Indicates both downflow and horizontal units.

(a) For 4000, 5000, 6000, and 7000 cfm-Unit applications below 320 cfm/ton are only applicable to Constant Volume THD models without electric heat and YHD models equipped with modulating gas heat. See below for restrictions:
- Electric heaters on applications below 320 cfm/ton.
- Frostat and Crankcase heaters are required on applications below 320 cfm/ton.
- Multi-speed, single zone VAV or multi-zone VAV applications are capable of running below 320 cfm/ton during low speed airflow operation, but "full" airflow must be set to 320 cfm/ton or higher.

Table 43. Gross cooling capacities 25 tons three phase high efficiency T/YH*300G3,4,W (full load)

Air Flow cfm[a]	Ent DB (°F)	Ambient Temperature																	
		85						95						105					
		Entering Wet Bulb																	
		61		67		73		61		67		73		61		67		73	
		MBh	SHC	MBh	SHC	MBh	SHC	MBh	SHC	MBh	SHC	MBh	SHC	MBh	SHC	MBh	SHC	MBh	SHC
5000	75	244.4	192.5	271.7	152.0	293.2	82.9	232.4	184.9	257.9	146.3	278.4	79.2	219.4	176.7	243.2	139.9	262.5	74.8
	80	250.0	215.3	270.3	187.5	295.4	139.2	238.0	206.6	256.8	180.3	280.5	133.8	225.0	197.3	242.2	172.5	264.5	127.7
	85	258.5	233.2	274.2	213.2	297.6	178.4	246.2	223.6	260.6	204.8	282.6	171.4	232.8	213.3	246.0	195.8	266.5	163.9
	90	268.6	248.1	281.3	232.8	299.8	206.6	255.9	237.7	267.4	223.5	284.7	198.6	242.1	226.7	252.6	213.6	268.6	189.9
6000	75	255.4	206.3	281.1	164.5	301.6	93.9	242.7	198.1	266.6	158.1	286.0	89.5	228.9	189.1	251.1	150.9	269.3	84.3
	80	262.0	230.2	280.9	201.3	304.7	151.7	249.2	220.8	266.6	193.4	289.1	145.6	235.5	210.7	251.4	184.8	272.3	138.7
	85	271.2	249.0	285.7	228.0	307.8	192.1	258.2	238.7	271.4	219.0	292.1	184.5	244.1	227.7	256.1	209.2	275.3	176.2
	90	282.0	264.7	293.6	248.6	311.0	221.4	268.5	253.6	279.0	238.6	295.1	212.7	253.9	241.8	263.4	227.9	278.3	203.3
7000	75	265.0	218.8	289.1	175.7	308.5	103.5	251.6	209.8	273.9	168.5	292.2	98.3	237.1	200.1	257.7	160.6	274.8	92.5
	80	272.6	243.7	290.1	213.7	312.6	162.9	259.1	233.6	275.1	205.1	296.2	156.0	244.6	222.8	259.1	195.8	278.8	148.4
	85	282.6	263.5	295.9	241.5	316.7	204.5	268.8	252.4	280.9	231.7	300.2	196.1	254.0	240.6	264.8	221.2	282.7	187.1
	90	293.9	279.9	304.6	263.0	320.8	234.9	279.7	268.1	289.2	252.2	304.2	225.4	264.4	255.6	272.9	240.8	286.7	215.3
8000	75	273.3	229.9	295.7	185.4	324.1	111.8	259.1	220.1	279.8	177.5	306.4	105.9	243.9	209.7	262.8	168.9	287.8	99.3
	80	281.8	255.9	298.0	224.7	324.2	172.6	267.6	245.0	282.2	215.4	306.7	165.0	252.3	233.5	265.5	205.3	288.3	156.6
	85	292.5	276.6	304.7	253.7	324.2	215.6	278.0	264.7	288.9	243.1	307.0	206.4	262.5	252.2	272.1	231.9	288.7	196.7
	90	304.5	293.8	314.1	276.0	329.2	247.0	289.5	281.2	298.1	264.5	311.9	236.8	273.5	268.0	281.0	252.4	293.6	225.9
9000	75	280.1	239.6	301.0	193.8	327.8	118.7	265.2	229.1	284.3	185.2	309.4	112.0	249.3	218.0	266.6	175.8	290.0	104.7
	80	289.6	266.7	304.4	234.4	329.1	181.0	274.7	255.1	288.0	224.3	310.9	172.6	258.7	242.8	270.5	213.5	291.7	163.6
	85	301.1	288.3	312.1	264.4	330.3	225.2	285.9	275.7	295.6	253.1	312.3	215.4	269.6	262.5	278.1	241.2	293.3	204.9
	90	313.7	306.3	322.3	287.7	336.3	257.8	297.9	293.0	305.5	275.5	318.3	246.8	281.2	279.0	287.7	262.6	299.2	235.1
10000	75	285.6	247.9	304.9	200.8	330.2	124.2	270.0	236.7	287.4	191.4	311.0	116.8	253.3	224.8	269.0	181.3	290.9	108.7
	80	296.1	276.1	309.5	242.7	332.6	188.0	280.4	263.8	292.3	231.9	313.7	178.9	263.6	250.7	274.1	220.3	293.7	169.1
	85	308.3	298.6	318.2	273.8	335.0	233.5	292.3	285.3	300.9	261.7	316.3	222.9	275.3	271.3	282.6	249.0	296.6	211.7
	90	321.4	317.4	329.1	298.0	342.0	267.1	305.0	303.3	311.6	285.0	323.2	255.4	287.5	287.5	293.0	271.4	303.4	243.0
11000	75	289.7	254.9	307.3	206.5	331.1	128.3	273.3	243.0	289.2	196.3	311.2	120.2	255.9	230.3	270.0	185.5	291.5	111.3
	80	301.1	284.2	313.2	249.6	334.7	193.7	284.7	271.1	295.2	238.0	315.1	183.8	267.2	257.3	276.3	225.8	294.4	173.2
	85	314.1	307.6	322.8	281.8	338.3	240.4	297.4	293.5	304.8	269.0	318.9	229.1	279.6	278.8	285.8	255.6	298.4	217.1
	90	327.9	327.1	334.5	306.9	346.3	275.1	310.7	310.7	316.3	293.2	326.8	262.7	292.5	292.5	297.0	278.8	306.2	249.5

Table 43. Gross cooling capacities 25 tons three phase high efficiency T/YH*300G3,4,W (full load)

Air Flow cfm[a]	Ent DB (°F)	Ambient Temperature																	
		115						120						125					
		Entering Wet Bulb																	
		61		67		73		61		67		73		61		67		73	
		MBh	SHC	MBh	SHC	MBh	SHC	MBh	SHC	MBh	SHC	MBh	SHC	MBh	SHC	MBh	SHC	MBh	SHC
5000	75	205.4	167.9	227.4	132.8	245.5	69.7	198.0	163.2	219.2	129.0	236.7	66.9	190.4	158.3	210.7	125.0	227.6	64.0
	80	210.9	187.2	226.7	164.0	247.5	120.9	203.5	182.0	218.5	159.5	238.6	117.2	195.9	176.5	210.1	154.8	229.5	113.4
	85	218.5	202.3	230.4	186.2	249.5	155.7	211.0	196.6	222.2	181.1	240.6	151.3	203.2	190.7	213.8	175.8	231.4	146.8
	90	227.3	215.0	236.7	202.9	251.5	180.5	219.5	208.8	228.4	197.4	242.5	175.5	211.5	202.5	219.8	191.6	233.4	170.4
6000	75	214.2	179.5	234.6	143.1	251.7	78.5	206.5	174.4	226.0	138.9	242.5	75.3	198.5	169.2	217.1	134.6	233.0	72.0
	80	220.7	199.9	235.1	175.6	254.6	131.2	212.9	194.3	226.6	170.7	245.4	127.1	204.9	188.5	217.8	165.6	235.9	122.9
	85	229.0	216.0	239.7	198.8	257.5	167.2	221.1	209.8	231.2	193.3	248.3	162.5	213.0	203.6	222.4	187.7	238.8	157.6
	90	238.4	229.3	246.8	216.5	260.5	193.1	230.3	222.9	238.1	210.6	251.2	187.8	221.9	216.2	229.2	204.5	241.6	182.3
7000	75	221.7	189.7	240.4	152.0	256.4	85.9	213.6	184.3	231.5	147.5	246.8	82.4	205.2	178.7	222.2	142.8	237.0	78.7
	80	229.1	211.3	242.1	185.8	260.3	140.1	220.9	205.2	233.2	180.5	250.7	135.7	212.6	199.1	224.1	175.1	240.8	131.1
	85	238.2	228.2	247.7	210.1	264.2	177.4	229.9	221.7	238.8	204.3	254.6	172.3	221.4	215.1	229.6	198.2	244.7	167.0
	90	248.2	242.4	255.6	228.7	268.1	204.4	239.7	235.5	246.5	222.4	258.4	198.7	230.9	228.5	237.2	215.9	248.5	192.8
8000	75	227.7	198.6	244.9	159.6	268.2	92.0	219.2	192.8	235.5	154.6	258.0	88.1	210.5	186.8	225.9	149.6	247.5	84.0
	80	236.1	221.2	247.7	194.6	268.8	147.6	227.6	214.8	238.5	189.0	258.7	142.8	218.8	208.3	229.0	183.2	248.4	137.9
	85	245.9	239.0	254.3	220.0	269.5	186.2	237.3	232.2	245.0	213.8	259.5	180.8	228.4	225.2	235.5	207.4	249.2	175.1
	90	256.5	254.0	262.9	239.5	274.3	214.3	247.7	246.8	253.5	232.9	264.3	208.2	238.5	238.5	243.9	226.0	254.0	202.0
9000	75	232.4	206.1	247.9	165.7	269.7	96.6	223.5	200.0	238.2	160.5	259.1	92.4	214.4	193.6	228.2	155.0	248.3	87.9
	80	241.7	229.8	252.0	202.0	271.5	153.8	232.8	223.0	242.4	196.0	261.0	148.6	223.7	216.1	232.5	189.9	250.3	143.3
	85	252.3	248.5	259.5	228.5	273.4	193.7	243.3	241.3	249.9	221.9	263.0	187.8	234.1	233.9	240.0	215.2	252.4	181.8
	90	263.5	263.5	268.9	249.0	279.2	222.8	254.3	254.3	259.1	241.9	268.8	216.4	244.8	244.8	249.1	234.7	258.1	209.8
10000	75	235.6	212.3	249.6	170.5	269.8	99.9	226.4	205.7	239.5	164.9	260.5	95.3	217.0	199.0	229.2	159.1	249.2	90.5
	80	245.9	237.0	254.9	208.1	272.8	158.6	236.7	229.9	244.9	201.7	262.0	153.1	227.2	222.6	234.6	195.2	250.9	147.4
	85	257.3	256.6	263.3	235.7	275.9	199.7	247.9	247.9	253.3	228.7	265.1	193.5	238.3	238.3	243.1	221.6	254.1	187.1
	90	269.1	269.1	273.5	257.1	282.7	229.9	259.5	259.5	263.4	249.6	271.9	223.2	249.6	249.6	253.0	242.0	260.9	216.2
11000	75	237.5	217.0	249.9	174.0	271.0	101.8	228.0	210.1	240.5	167.9	261.3	96.8	218.1	203.0	229.8	161.7	252.3	91.6
	80	248.8	242.8	256.3	212.8	274.0	162.0	239.2	235.3	246.0	206.1	263.6	156.1	229.3	227.7	235.4	199.2	253.4	150.1
	85	260.9	260.9	265.8	241.4	277.0	204.4	251.2	251.2	255.4	234.1	265.9	197.9	241.2	241.2	244.8	226.6	254.5	191.1
	90	273.3	273.3	276.7	263.8	284.7	235.7	263.3	263.3	266.2	256.0	273.6	228.5	253.1	253.1	255.4	248.0	262.2	221.2

Notes:

1. All capacities shown are gross and have not considered indoor fan heat. To obtain NET cooling capacity subtract indoor fan heat. For indoor fan heat formula, refer to appropriate airflow table notes.
2. MBh = Total Gross Capacity
3. SHC = Sensible Heat Capacity
4. *Indicates both downflow and horizontal units.

(a) For 5000, 6000, and 7000 cfm-Unit applications below 320 cfm/ton are only applicable to Constant Volume THD models without electric heat and YHD models equipped with modulating gas heat. See below for restrictions:
- Electric heaters on applications below 320 cfm/ton.
- Frostat and Crankcase heaters are required on applications below 320 cfm/ton.
- Multi-speed, single zone VAV or multi-zone VAV applications are capable of running below 320 cfm/ton during low speed airflow operation, but "full" airflow must be set to 320 cfm/ton or higher.

Table 44. Gross cooling capacities 25 tons three phase dehumidification (hot gas reheat) option high efficiency T/YHD300G3,4,W (Digit 22 = B)

Air Flow cfm[a]	Ent DB (°F)	Ambient Temperature																	
		85						95						105					
		Entering Wet Bulb																	
		61		67		73		61		67		73		61		67		73	
		MBh	SHC	MBh	SHC	MBh	SHC	MBh	SHC	MBh	SHC	MBh	SHC	MBh	SHC	MBh	SHC	MBh	SHC
5000	75	237.6	170.2	266.9	137.2	298.3	101.7	226.6	164.3	254.2	130.9	284.0	95.4	215.0	158.1	241.1	124.7	269.5	89.1
	80	237.8	197.2	266.6	164.6	298.3	130.4	226.8	191.3	254.2	158.7	284.5	124.4	215.2	184.8	241.2	152.8	269.5	117.9
	85	238.0	223.6	266.8	192.2	298.3	157.9	227.3	217.6	254.4	186.3	284.5	150.8	216.0	211.0	241.3	180.0	269.3	145.0
	90	244.4	244.4	267.0	219.3	298.3	185.7	235.5	235.5	254.6	213.1	284.2	179.6	226.0	225.9	241.7	206.9	269.5	173.2
6500	75	251.7	194.9	281.3	151.1	313.6	103.1	239.4	188.7	267.3	144.8	297.7	96.7	226.4	182.1	252.8	138.0	281.0	90.0
	80	252.2	230.1	281.5	185.9	313.9	142.8	239.8	223.7	267.7	179.8	299.0	134.7	227.0	216.7	253.1	173.7	281.5	129.6
	85	257.9	257.7	282.0	223.2	313.7	176.7	248.0	247.9	268.2	217.0	297.6	170.9	237.2	237.2	253.6	210.5	281.8	163.8
	90	272.5	272.4	282.5	258.1	314.3	213.5	262.0	261.9	268.8	251.7	298.7	207.5	250.8	250.7	254.4	244.6	282.3	201.7
8000	75	260.7	217.8	290.3	162.9	322.7	103.2	247.6	211.8	276.0	155.2	305.8	96.6	233.7	205.3	260.1	149.5	288.2	90.1
	80	262.3	259.5	291.1	207.3	323.0	153.7	249.7	247.8	276.3	201.2	306.2	146.9	238.4	236.1	260.8	195.0	288.7	139.6
	85	277.8	277.7	291.9	252.8	324.9	192.8	266.3	266.3	277.0	246.3	307.1	188.1	254.2	254.2	261.6	239.2	289.8	182.0
	90	293.7	293.6	293.9	292.8	324.5	241.9	281.8	281.8	280.5	277.0	307.8	235.5	269.1	269.1	269.3	268.3	290.6	229.1
9000	75	265.2	233.5	294.9	170.4	326.8	103.2	251.5	226.7	279.5	163.8	309.5	97.1	237.2	219.2	263.4	156.9	291.4	90.9
	80	269.5	264.6	294.7	223.9	328.3	159.2	259.7	259.5	280.4	215.9	310.2	152.6	247.7	247.6	264.4	209.5	292.4	145.4
	85	288.2	288.1	296.6	271.4	328.6	206.7	276.1	275.9	281.4	264.7	311.4	201.1	263.2	263.2	265.9	256.5	293.6	196.0
	90	302.2	301.5	303.9	299.6	329.4	260.3	292.3	292.2	292.9	292.7	311.8	255.6	278.9	278.9	279.6	279.5	294.5	248.5
10000	75	268.8	247.3	298.4	178.1	330.1	104.0	254.7	240.1	282.6	171.2	312.4	98.0	240.0	233.0	266.2	164.6	293.6	91.6
	80	279.8	279.8	299.5	236.4	331.3	165.7	267.6	267.5	284.2	228.6	313.0	159.1	254.0	254.5	267.3	223.1	295.4	151.0
	85	297.2	297.2	300.7	289.4	332.4	221.0	284.4	284.3	285.0	281.9	314.7	215.8	270.9	270.7	269.0	265.0	296.6	209.8
	90	315.0	315.0	315.6	315.6	333.5	279.6	301.5	301.5	302.1	301.9	316.4	271.6	287.3	287.2	287.9	287.6	297.7	265.0
10500	75	270.3	254.1	300.1	181.8	332.2	103.2	256.1	246.9	283.8	175.0	313.4	98.3	241.2	239.6	267.4	168.8	294.6	91.9
	80	283.5	283.4	301.2	243.4	332.8	168.0	271.0	270.7	285.1	236.6	314.6	149.6	257.8	257.6	268.5	229.6	296.6	153.9
	85	301.2	301.2	302.5	297.8	334.1	228.5	287.5	287.2	286.5	283.2	316.3	222.6	274.3	274.2	271.3	263.2	297.9	216.4
	90	319.3	319.3	320.0	319.8	335.2	288.2	305.5	305.3	306.2	305.9	317.5	280.7	291.0	290.9	291.6	291.5	299.1	272.8
11000	75	271.7	260.7	301.5	185.8	332.6	105.1	257.3	253.5	285.1	179.1	314.5	98.9	242.4	239.2	268.5	173.1	295.9	92.6
	80	287.0	286.7	302.6	250.0	334.2	170.7	273.9	273.7	286.4	243.2	316.9	162.5	260.6	260.6	269.7	235.9	297.6	156.7
	85	305.1	304.9	304.5	304.2	335.6	235.1	291.3	291.2	288.4	280.2	317.6	229.0	277.4	277.4	274.0	262.8	299.1	222.8
	90	323.4	323.3	324.1	323.8	336.7	295.8	309.2	309.1	309.9	309.7	318.9	288.2	294.5	294.5	295.1	295.0	300.4	280.4

Table 44. Gross cooling capacities 25 tons three phase dehumidification (hot gas reheat) option high efficiency T/YHD300G3,4,W (Digit 22 = B)

Air Flow cfm[a]	Ent DB (°F)	Ambient Temperature																	
		115						120						125					
		Entering Wet Bulb																	
		61		67		73		61		67		73		61		67		73	
		MBh	SHC	MBh	SHC	MBh	SHC	MBh	SHC	MBh	SHC	MBh	SHC	MBh	SHC	MBh	SHC	MBh	SHC
5000	75	202.6	151.6	227.5	118.5	253.9	82.4	196.1	148.2	220.0	114.8	245.8	79.0	189.5	144.9	212.3	111.2	237.3	75.6
	80	202.9	178.2	227.2	145.7	253.8	111.3	196.5	175.0	220.0	142.3	245.6	107.9	189.8	171.5	212.6	138.9	237.3	104.5
	85	204.6	203.6	227.5	173.3	253.9	138.4	199.2	199.2	220.4	170.0	245.9	135.1	193.9	193.9	213.0	166.6	237.6	131.8
	90	215.9	215.9	227.9	200.1	254.2	166.7	210.6	210.6	220.7	196.6	246.2	163.4	205.0	204.9	213.3	193.2	237.9	160.1
6500	75	212.7	175.3	237.9	130.0	264.1	83.1	205.6	171.9	229.7	127.2	255.2	79.7	198.4	168.5	221.5	123.5	246.0	76.1
	80	214.0	209.1	238.0	167.4	264.3	122.8	207.2	205.4	230.1	164.0	255.6	119.4	200.5	199.9	222.1	160.6	246.4	116.0
	85	225.8	225.7	238.7	203.5	265.1	157.2	219.7	219.6	230.7	199.9	256.2	153.7	213.5	213.5	222.7	196.3	247.2	150.4
	90	238.9	238.9	240.2	236.6	265.6	195.5	232.7	232.6	232.7	232.0	256.8	192.1	226.1	226.1	226.1	225.3	247.8	188.5
8000	75	219.2	198.0	244.4	141.6	269.9	83.7	211.7	194.1	235.6	139.0	260.8	80.6	204.1	190.2	227.1	135.5	251.1	77.2
	80	227.1	227.0	244.7	188.9	271.1	132.5	220.8	220.8	236.4	185.6	261.6	128.7	214.1	214.1	227.9	182.0	252.2	125.1
	85	241.4	241.3	245.6	232.1	271.9	176.3	234.7	234.6	237.3	228.3	262.7	173.5	227.8	227.7	228.8	224.1	253.2	170.8
	90	255.9	255.8	256.4	256.2	272.7	223.1	248.8	248.8	249.4	249.3	263.5	219.9	241.6	241.6	242.1	242.1	254.1	216.4
9000	75	222.3	211.8	247.1	150.1	272.7	84.4	214.6	208.1	238.5	146.8	263.2	81.0	206.8	204.1	229.7	143.2	253.2	77.4
	80	234.7	234.5	247.9	202.7	274.0	137.8	228.0	227.7	239.4	199.2	265.6	132.5	220.9	220.7	230.7	195.4	255.1	130.9
	85	249.7	249.5	249.2	248.6	275.2	190.4	242.6	242.5	241.3	238.4	265.8	187.3	235.2	235.1	233.6	228.6	256.1	184.1
	90	264.8	264.8	265.3	265.1	276.2	241.1	257.5	257.3	258.0	257.7	266.8	237.2	249.8	249.7	250.3	250.1	257.1	233.0
10000	75	224.8	224.5	249.4	158.3	274.8	84.8	217.2	214.2	240.6	155.1	265.0	81.9	209.8	204.0	231.7	152.2	254.7	80.2
	80	241.0	241.0	250.5	215.8	277.5	141.3	233.9	233.9	241.8	212.1	267.0	140.3	226.6	226.4	232.8	208.4	257.0	136.7
	85	256.6	256.6	254.1	246.2	277.8	203.4	249.2	249.2	247.5	240.9	268.3	200.1	241.5	241.4	241.8	241.5	258.3	196.6
	90	272.5	272.5	272.9	272.9	279.0	256.9	264.7	264.7	265.2	265.1	269.4	252.9	256.6	256.6	257.1	256.9	259.5	249.1
10500	75	226.2	222.1	250.4	162.6	275.7	85.3	218.8	211.8	241.5	159.9	265.6	83.7	211.7	204.3	232.6	157.1	255.4	82.4
	80	243.8	243.8	251.6	222.3	277.7	147.0	236.6	236.4	242.8	218.6	268.0	143.5	229.1	228.8	234.2	213.6	258.0	140.1
	85	259.7	259.7	258.1	251.8	279.0	209.7	252.1	251.9	252.5	252.2	269.3	206.4	244.3	244.1	244.7	244.3	259.3	203.0
	90	275.9	275.8	276.3	276.2	280.7	263.7	267.9	267.8	268.4	268.1	270.5	261.0	259.7	259.6	260.1	259.8	260.6	257.1
11000	75	227.7	219.7	251.2	167.7	276.4	87.2	220.8	212.4	242.4	164.9	266.3	86.0	214.6	210.1	233.3	161.8	256.1	84.1
	80	246.4	246.2	252.6	228.5	278.6	149.9	239.1	238.8	243.7	224.6	268.8	146.8	231.5	231.3	234.6	220.7	259.6	141.2
	85	262.6	262.4	263.0	262.6	280.5	214.9	254.8	254.6	255.2	254.9	270.2	212.8	246.9	246.7	247.2	246.9	260.2	209.1
	90	279.0	278.9	279.5	279.2	281.4	272.9	270.9	270.8	271.3	271.0	271.6	269.0	262.5	262.4	263.0	262.8	261.5	258.0

Notes:

1. All capacities shown are gross and have not considered indoor fan heat. To obtain NET cooling capacity subtract indoor fan heat. For indoor fan heat formula, refer to appropriate airflow table notes.
2. MBh = Total Gross Capacity
3. SHC = Sensible Heat Capacity
4. *Indicates both downflow and horizontal units.

(a) For 5000, 6000, and 7000 cfm-Unit applications below 320 cfm/ton are only applicable to Constant Volume THD models without electric heat and YHD models equipped with modulating gas heat. See below for restrictions:
- Electric heaters on applications below 320 cfm/ton.
- Frostat and Crankcase heaters are required on applications below 320 cfm/ton.
- Multi-speed, single zone VAV or multi-zone VAV applications are capable of running below 320 cfm/ton during low speed airflow operation, but "full" airflow must be set to 320 cfm/ton or higher.

Table 45. Evaporator fan performance 12½ tons TSD150G standard refrigeration system downflow

	External Static Pressure (Inches of Water)																			
	0.10		0.20		0.30		0.40		0.50		0.60		0.70		0.80		0.90		1.00	
cfm	rpm	bhp	rpm	bhp	rpm	bhp	rpm	bhp	rpm	bhp	rpm	bhp	rpm	bhp	rpm	bhp	rpm	bhp	rpm	bhp
	3-hp Standard Motor & Low Static Drive										3-hp Standard Motor & Drive									
4000	-	-	461	0.60	522	0.79	575	0.98	624	1.18	667	1.37	707	1.56	743	1.75	773	1.90	802	2.05
4500	410	0.51	485	0.74	545	0.95	598	1.17	645	1.39	688	1.60	728	1.82	765	2.04	800	2.25	833	2.47
5000	437	0.64	509	0.89	569	1.14	621	1.38	667	1.62	710	1.86	749	2.10	786	2.34	821	2.58	853	2.82
5500	465	0.79	535	1.08	593	1.35	644	1.62	690	1.88	732	2.14	771	2.41	807	2.67	842	2.94	874	3.20
6000	493	0.97	561	1.28	618	1.58	668	1.87	713	2.16	754	2.45	793	2.75	829	3.03	863	3.31	896[a]	3.60
													3-hp Standard Motor & High Static Drive							

Continued

	External Static Pressure (Inches of Water)																			
	1.10		1.20		1.30		1.40		1.50		1.60		1.70		1.80		1.90		2.00	
cfm	rpm	bhp	rpm	bhp	rpm	bhp	rpm	bhp	rpm	bhp	rpm	bhp	rpm	bhp	rpm	bhp	rpm	bhp	rpm	bhp
	3-hp Standard Motor & High Static Drive																			
4000	826	2.17	856	2.33	880	2.47	902	2.60	923	2.72	944	2.84	963	2.96	982	3.08	1002	3.20	1021	3.32
4500	858	2.64	888	2.82	909	2.96	932	3.11	958	3.29	981	3.46	1000	3.59	1020	3.73	1038	3.87	1056	4.00
5000	885	3.06	916	3.31	941	3.51	963	3.69	991	3.89	1010	4.06	1029	4.22	1051	4.40	1074	4.60	1094	4.78
5500	906	3.46	936	3.73	965	4.00	993	4.26	1019	4.53	1040	4.73	1061	4.93	1087	5.15	1104	5.34	1122	5.52
6000	927	3.89	957	4.18	986	4.47	1014	4.76	1041	5.06	1066	5.34	1091	5.64	-	-	-	-	-	-
	5-hp Oversized Motor & Drive																			

Notes:
1. For Standard Evaporator Fan Speed (rpm), reference Table 86, p. 119.
2. For High Evaporator Fan Speed (rpm), reference Table 87, p. 119.
3. For Oversized Evaporator Fan Speed (rpm), reference Table 88, p. 120.
4. Fan motor heat (MBh) = 3.15 x Fan bhp.
5. Data includes pressure drop due to standard filters and wet coils. No accessories or options are included in pressure drop data.
6. Refer to Table 89, p. 120 to determine additional static pressure drop due to other options/accessories.
7. Factory supplied motors, in commercial equipment, are definite purpose motors, specifically designed and tested to operate reliably and continuously at all cataloged conditions. Using the full horsepower range of our fan motors as shown in our tabular data will not result in nuisance tripping or premature motor failure. Our product's warranty will not be affected.
8. For 380V/60 Hz units, the oversized motor is used as the standard motor. Refer to "Motor & Sheave/Fan Speed" tables to determine operating range.

(a) 5-hp Oversized Motor & Drive

Table 46. Evaporator fan performance 12½ tons TSH150G standard refrigeration system horizontal

	External Static Pressure (Inches of Water)																			
	0.10		0.20		0.30		0.40		0.50		0.60		0.70		0.80		0.90		1.00	
cfm	rpm	bhp	rpm	bhp	rpm	bhp	rpm	bhp	rpm	bhp	rpm	bhp	rpm	bhp	rpm	bhp	rpm	bhp	rpm	bhp
	3-hp Standard Motor & Low Static Drive								3-hp Standard Motor & Drive										3 hp Standard Motor & High Static Drive	
4000	-	-	494	0.80	558	1.02	613	1.23	662	1.44	707	1.64	749	1.84	787	2.04	824	2.24	851	2.40
4500	-	-	521	1.00	584	1.26	638	1.50	686	1.74	731	1.98	772	2.21	811	2.43	847	2.66	882	2.88
5000	475	0.92	549	1.24	610	1.53	663	1.80	711	2.08	756	2.34	797	2.61	835	2.86	871	3.12	905	3.37
5500	506	1.15	578	1.50	637	1.83	690	2.15	737	2.45	781	2.75	821	3.04	859	3.34	895	3.62	929	3.91
6000	538	1.42	607	1.81	666	2.18	717	2.53	764	2.87	807	3.20	846	3.52	884	3.85	920	4.17	953	4.48
															5-hp Oversized Motor & Drive					

Continued

	External Static Pressure (Inches of Water)																			
	1.10		1.20		1.30		1.40		1.50		1.60		1.70		1.80		1.90		2.00	
cfm	rpm	bhp	rpm	bhp	rpm	bhp	rpm	bhp	rpm	bhp	rpm	bhp	rpm	bhp	rpm	bhp	rpm	bhp	rpm	bhp
	3-hp Standard Motor & High Static Drive																			
4000	882	2.63	909	2.80	935	2.99	961	3.19	991	3.42	1017	3.65	1043	3.88	1069	4.12	1093	4.35	1116	4.58
4500	915	3.10	941	3.27	968	3.53	994	3.75	1016	3.94	1042	4.18	1063	4.36	1090	4.62	1117	4.89	1139	5.13
5000	938	3.62	969	3.86	999	4.11	1029	4.36	1049	4.52	1074	4.82	1100	5.10	1118	5.28	1141	5.54	1162	5.77
5500	961	4.18	993	4.46	1022	4.73	1051	5.00	1080	5.28	1107	5.55	-	-	-	-	-	-	-	-
6000	986	4.79	1016	5.09	1046	5.40	1076	5.71	-	-	-	-	-	-	-	-	-	-	-	-
	5-hp Oversized Motor & Drive																			

Notes:

1. For Standard Evaporator Fan Speed (rpm), reference Table 86, p. 119.
2. For High Evaporator Fan Speed (rpm), reference Table 87, p. 119.
3. For Oversized Evaporator Fan Speed (rpm), reference Table 88, p. 120.
4. Fan motor heat (MBh) = 3.15 x Fan bhp.
5. Data includes pressure drop due to standard filters and wet coils. No accessories or options are included in pressure drop data.
6. Refer to Table 89, p. 120 to determine additional static pressure drop due to other options/accessories.
7. Factory supplied motors, in commercial equipment, are definite purpose motors, specifically designed and tested to operate reliably and continuously at all cataloged conditions. Using the full horsepower range of our fan motors as shown in our tabular data will not result in nuisance tripping or premature motor failure. Our product's warranty will not be affected.
8. For 380V/60 Hz units, the oversized motor is used as the standard motor. Refer to "Motor & Sheave/Fan Speed" tables to determine operating range.

Table 47. Evaporator fan performance 12½ tons with gas heat YSD150G standard refrigeration system downflow

	External Static Pressure (Inches of Water)																			
	0.10		0.20		0.30		0.40		0.50		0.60		0.70		0.80		0.90		1.00	
cfm	rpm	bhp	rpm	bhp	rpm	bhp	rpm	bhp	rpm	bhp	rpm	bhp	rpm	bhp	rpm	bhp	rpm	bhp	rpm	bhp
	3-hp Standard Motor & Low Static Drive						3-hp Standard Motor & Drive													
4000	511	0.75	559	0.92	601	1.08	639	1.24	673	1.40	706	1.56	736	1.71	763	1.85	793	2.00	816	2.12
4500	562	1.02	607	1.21	647	1.40	683	1.58	717	1.76	748	1.94	777	2.11	805	2.29	831	2.46	854	2.61
5000	614	1.35	656	1.56	694	1.77	729	1.98	761	2.18	791	2.38	820	2.57	847	2.77	873	2.97	898	3.17
5500	667	1.74	706	1.98	742	2.21	776	2.44	807	2.67	836	2.89	863	3.11	890	3.32	915	3.55	940	3.76
6000	720	2.21	757	2.48	791	2.73	823	2.98	853	3.23	881	3.47	908	3.72	934	3.96	959	4.20	982	4.43
					3-hp Standard Motor & High Static Drive						5-hp Oversized Motor & Drive									

Continued

	External Static Pressure (Inches of Water)																			
	1.10		1.20		1.30		1.40		1.50		1.60		1.70		1.80		1.90		2.00	
cfm	rpm	bhp	rpm	bhp	rpm	bhp	rpm	bhp	rpm	bhp	rpm	bhp	rpm	bhp	rpm	bhp	rpm	bhp	rpm	bhp
	3-hp Standard Motor & High Static Drive																			
4000	844	2.27	868	2.41	889	2.52	910	2.64	929	2.76	948	2.87	967	2.98	986	3.10	1003	3.21	1020	3.32
4500	883	2.78	905	2.93	926	3.07	951	3.24	973	3.40	993	3.54	1011	3.67	1028	3.79	1047	3.93	1064	4.06
5000	921	3.36	942	3.52	967	3.72	990	3.89	1009	4.05	1027	4.20	1051	4.39	1072	4.59	1091	4.75	1107	4.89
5500	962	3.97	985	4.19	1006	4.40	1027	4.60	1046	4.79	1069	5.00	1090	5.18	1108	5.37	1123	5.53	1144	5.72
6000	1005	4.67	1026	4.90	1048	5.14	1069	5.38	1089	5.61	-	-	-	-	-	-	-	-	-	-
	5-hp Oversized Motor & Drive																			

Notes:
1. For Standard Evaporator Fan Speed (rpm), reference Table 86, p. 119.
2. For High Evaporator Fan Speed (rpm), reference Table 87, p. 119.
3. For Oversized Evaporator Fan Speed (rpm), reference Table 88, p. 120.
4. Fan motor heat (MBh) = 3.15 x Fan bhp.
5. Data includes pressure drop due to standard filters and wet coils. No accessories or options are included in pressure drop data.
6. Refer to Table 89, p. 120 to determine additional static pressure drop due to other options/accessories.
7. Factory supplied motors, in commercial equipment, are definite purpose motors, specifically designed and tested to operate reliably and continuously at all cataloged conditions. Using the full horsepower range of our fan motors as shown in our tabular data will not result in nuisance tripping or premature motor failure. Our product's warranty will not be affected.
8. For 380V/60 Hz units, the oversized motor is used as the standard motor. Refer to "Motor & Sheave/Fan Speed" tables to determine operating range.

Table 48. Evaporator fan performance 12½ tons with gas heat YSH150G standard refrigeration system horizontal

	External Static Pressure (Inches of Water)																			
	0.10		0.20		0.30		0.40		0.50		0.60		0.70		0.80		0.90		1.00	
cfm	rpm	bhp	rpm	bhp	rpm	bhp	rpm	bhp	rpm	bhp	rpm	bhp	rpm	bhp	rpm	bhp	rpm	bhp	rpm	bhp
	3-hp Standard Motor & Low Static Drive				3-hp Standard Motor & Drive														3-hp Standard Motor & High Static Drive	
4000	562	1.04	610	1.22	653	1.40	692	1.57	727	1.74	760	1.90	791	2.06	820	2.22	842	2.34	875	2.58
4500	619	1.42	665	1.63	705	1.84	742	2.03	776	2.23	808	2.42	838	2.60	866	2.78	893	2.95	920	3.14
5000	678	1.88	720	2.13	758	2.36	793	2.58	826	2.80	857	3.02	886	3.23	914	3.43	940	3.64	966	3.84
5500	737	2.45	776	2.72	813	2.98	846	3.23	877	3.48	907	3.72	935	3.96	963	4.19	988	4.42	1013	4.64
6000	796	3.12	834	3.42	868	3.71	900	3.99	930	4.26	959	4.53	986	4.79	1012	5.05	1037	5.31	1062	5.56
					5-hp Oversized Motor & Drive															

Continued

	External Static Pressure (Inches of Water)																			
	1.10		1.20		1.30		1.40		1.50		1.60		1.70		1.80		1.90		2.00	
cfm	rpm	bhp	rpm	bhp	rpm	bhp	rpm	bhp	rpm	bhp	rpm	bhp	rpm	bhp	rpm	bhp	rpm	bhp	rpm	bhp
	3-hp Standard Motor & High Static Drive																			
4000	900	2.74	926	2.93	952	3.11	981	3.34	1008	3.56	1032	3.78	1057	4.01	1079	4.22	1102	4.45	1127	4.70
4500	939	3.26	967	3.53	992	3.74	1014	3.92	1037	4.13	1060	4.34	1085	4.57	1110	4.82	1134	5.07	1156	5.33
5000	990	4.03	1014	4.23	1035	4.41	1051	4.54	1079	4.89	1102	5.12	1121	5.31	1142	5.54	-	-	-	-
5500	1037	4.87	1060	5.08	1082	5.30	1104	5.52	1125	5.73	-	-	-	-	-	-	-	-	-	-
6000	-	-	-	-	-	-	-	-	-	-	-	-	-	-	-	-	-	-	-	-
	5-hp Oversized Motor & Drive																			

Notes:

1. For Standard Evaporator Fan Speed (rpm), reference Table 86, p. 119.
2. For High Evaporator Fan Speed (rpm), reference Table 87, p. 119.
3. For Oversized Evaporator Fan Speed (rpm), reference Table 88, p. 120.
4. Fan motor heat (MBh) = 3.15 x Fan bhp.
5. Data includes pressure drop due to standard filters and wet coils. No accessories or options are included in pressure drop data.
6. Refer to Table 89, p. 120 to determine additional static pressure drop due to other options/accessories.
7. Factory supplied motors, in commercial equipment, are definite purpose motors, specifically designed and tested to operate reliably and continuously at all cataloged conditions. Using the full horsepower range of our fan motors as shown in our tabular data will not result in nuisance tripping or premature motor failure. Our product's warranty will not be affected.
8. For 380V/60 Hz units, the oversized motor is used as the standard motor. Refer to "Motor & Sheave/Fan Speed" tables to determine operating range.

Table 49. Evaporator fan performance 15 tons TSD180G standard refrigeration system downflow

	External Static Pressure (Inches of Water)																			
	0.10		0.20		0.30		0.40		0.50		0.60		0.70		0.80		0.90		1.00	
cfm	rpm	bhp	rpm	bhp	rpm	bhp	rpm	bhp	rpm	bhp	rpm	bhp	rpm	bhp	rpm	bhp	rpm	bhp	rpm	bhp
	3-hp Standard Motor & Low Static Drive Accessory														3-hp Standard Motor Drive					
4800	-	-	385	0.83	419	0.95	455	1.11	486	1.28	517	1.48	545	1.63	571	1.78	596	1.92	620	2.05
5400	-	-	415	1.06	450	1.25	478	1.39	510	1.57	538	1.75	565	1.98	592	2.18	616	2.35	640	2.51
6000	387	1.03	447	1.38	477	1.59	507	1.75	533	1.92	562	2.12	588	2.30	613	2.55	637	2.82	660	3.02
6600	411	1.28	472	1.71	507	1.94	536	2.19	562	2.36	585	2.55	612	2.77	635	2.97	658	3.19	681	3.49
7200	436	1.58	496	2.05	539	2.41	564	2.64	591	2.89	614	3.07	635	3.28	659	3.51	682	3.74	703	3.96
															5-hp Oversized Motor & Drive					

Continued

	External Static Pressure (Inches of Water)																			
	1.10		1.20		1.30		1.40		1.50		1.60		1.70		1.80		1.90		2.00	
cfm	rpm	bhp	rpm	bhp	rpm	bhp	rpm	bhp	rpm	bhp	rpm	bhp	rpm	bhp	rpm	bhp	rpm	bhp	rpm	bhp
	3-hp Standard Motor & Drive								3HP Standard Motor & High Static Drive											
4800	643	2.19	664	2.32	685	2.44	705	2.57	724	2.69	743	2.81	761	2.93	779	3.05	797	3.16	813	3.27
5400	662	2.67	683	2.82	704	2.98	724	3.12	743	3.27	762	3.41	780	3.55	798	3.70	816	3.84	832	3.97
6000	682	3.20	704	3.38	724	3.56	744	3.73	763	3.91	782	4.07	800	4.24	817	4.40	835	4.57	851	4.73
6600	703	3.78	724	3.99	744	4.19	764	4.40	783	4.59	802	4.79	819	4.98	836	5.16	853	5.35	871	5.54
7200	725	4.24	745	4.56	765	4.89	784	5.11	803	5.34	822	5.56	840	5.78	857	6.00	873	6.20	890	6.42
	5-hp Oversized Motor & Drive												7.5hp OS Motor & High Static Drive[(a)]							

Notes:
1. For Standard Evaporator Fan Speed (rpm), reference Table 89, p. 120.
2. For High Evaporator Fan Speed (rpm), reference Table 90, p. 122.
3. For Oversized Evaporator Fan Speed (rpm), reference Table 91, p. 122.
4. Fan motor heat (MBh) = 3.15 x Fan bhp.
5. Data includes pressure drop due to standard filters and wet coils. No accessories or options are included in pressure drop data.
6. For all non-standard sheave combinations, please refer to accessory installer's guides ACC-SVN34*-EN and ACC-SVN72*-EN.
7. Refer to Table 92, p. 123 to determine additional static pressure drop due to other options/accessories.
8. Factory supplied motors, in commercial equipment, are definite purpose motors, specifically designed and tested to operate reliably and continuously at all cataloged conditions. Using the full horsepower range of our fan motors as shown in our tabular data will not result in nuisance tripping or premature motor failure. Our product's warranty will not be affected.
9. For 380V/60 Hz units, the oversized motor is used as the standard motor. Refer to "Motor & Sheave/Fan Speed" tables to determine operating range.

(a) 7.5HP high static oversized motor offering is field installed only.

Table 50. Evaporator fan performance 15 tons TSH180G standard refrigeration system horizontal

	External Static Pressure (Inches of Water)																			
	0.10		0.20		0.30		0.40		0.50		0.60		0.70		0.80		0.90		1.00	
cfm	rpm	bhp	rpm	bhp	rpm	bhp	rpm	bhp	rpm	bhp	rpm	bhp	rpm	bhp	rpm	bhp	rpm	bhp	rpm	bhp
	3-hp Standard Motor & Low Static Drive												3-hp Standard Motor & Drive							
4800	420	0.77	453	0.91	481	1.05	508	1.18	532	1.31	563	1.47	587	1.61	614	1.77	638	1.93	658	2.08
5400	464	1.06	494	1.22	521	1.37	546	1.52	570	1.67	592	1.81	619	2.00	642	2.15	664	2.32	687	2.50
6000	509	1.41	537	1.59	562	1.76	586	1.93	609	2.09	629	2.26	649	2.42	669	2.58	695	2.80	716	2.97
6600	554	1.83	580	2.03	604	2.22	627	2.41	648	2.59	668	2.78	687	2.96	706	3.14	724	3.32	745	3.53
7200	599	2.34	624	2.56	647	2.77	668	2.97	689	3.18	708	3.38	727	3.58	744	3.77	762	3.97	778	4.17
													5-hp Oversized Motor & Standard Drive							

Continued

	External Static Pressure (Inches of Water)																			
	1.10		1.20		1.30		1.40		1.50		1.60		1.70		1.80		1.90		2.00	
cfm	rpm	bhp	rpm	bhp	rpm	bhp	rpm	bhp	rpm	bhp	rpm	bhp	rpm	bhp	rpm	bhp	rpm	bhp	rpm	bhp
	3-hp Standard Motor & Drive				3HP Standard Motor & High Static Drive															
4800	678	2.23	698	2.39	719	2.55	738	2.71	756	2.88	774	3.05	791	3.22	808	3.38	825	3.56	841	3.73
5400	709	2.67	728	2.84	747	3.02	764	3.19	782	3.37	800	3.55	818	3.73	835	3.91	851	4.10	868	4.30
6000	735	3.16	757	3.36	777	3.55	796	3.75	812	3.93	828	4.12	844	4.32	860	4.52	877	4.73	893	4.92
6600	767	3.75	785	3.93	804	4.14	822	4.35	841	4.57	860	4.79	876	5.00	891	5.20	907	5.42	920	5.63
7200	794	4.36	815	4.61	835	4.86	852	5.05	869	5.27	886	5.50	902	5.73	921	5.98	937	6.20	952	6.43
	5-hp Oversized Motor & Standard Drive												7.5hp OS Motor & High Static Drive[a]							

Notes:
1. For Standard Evaporator Fan Speed (rpm), reference Table 89, p. 120.
2. For High Evaporator Fan Speed (rpm), reference Table 90, p. 122.
3. For Oversized Evaporator Fan Speed (rpm), reference Table 91, p. 122.
4. Fan motor heat (MBh) = 3.15 x Fan bhp.
5. Data includes pressure drop due to standard filters and wet coils. No accessories or options are included in pressure drop data.
6. For all non-standard sheave combinations, please refer to accessory installer's guides ACC-SVN34*-EN and ACC-SVN72*-EN.
7. Refer to Table 92, p. 123 to determine additional static pressure drop due to other options/accessories.
8. Factory supplied motors, in commercial equipment, are definite purpose motors, specifically designed and tested to operate reliably and continuously at all cataloged conditions. Using the full horsepower range of our fan motors as shown in our tabular data will not result in nuisance tripping or premature motor failure. Our product's warranty will not be affected.
9. For 380V/60 Hz units, the oversized motor is used as the standard motor. Refer to "Motor & Sheave/Fan Speed" tables to determine operating range.

(a) 7.5HP high static oversized motor offering is field installed only.

Table 51. Evaporator fan performance 15 tons with gas heat YSD180G standard refrigeration system downflow

	External Static Pressure (Inches of Water)																			
	0.10		0.20		0.30		0.40		0.50		0.60		0.70		0.80		0.90		1.00	
cfm	rpm	bhp	rpm	bhp	rpm	bhp	rpm	bhp	rpm	bhp	rpm	bhp	rpm	bhp	rpm	bhp	rpm	bhp	rpm	bhp
	3-hp Standard Motor & Low Static Drive												3-hp Standard Motor & Drive							
4800	379	0.80	415	0.93	449	1.08	484	1.26	513	1.46	544	1.63	573	1.79	600	1.94	627	2.09	651	2.24
5400	417	1.07	450	1.25	480	1.41	512	1.58	543	1.79	568	2.01	596	2.21	623	2.39	648	2.57	673	2.74
6000	456	1.43	486	1.64	515	1.80	542	1.98	571	2.18	599	2.41	622	2.65	645	2.89	671	3.10	695	3.30
6600	496	1.86	524	2.11	550	2.28	576	2.47	600	2.67	626	2.89	653	3.13	674	3.40	695	3.68	718	3.93
7200	535	2.39	562	2.61	587	2.86	610	3.05	633	3.26	655	3.47	679	3.71	705	3.97	726	4.26	745	4.57
											5hp Oversized Motor & Low Static Drive				5hp Oversized Motor & Standard Drive					

Continued

	External Static Pressure (Inches of Water)																			
	1.10		1.20		1.30		1.40		1.50		1.60		1.70		1.80		1.90		2.00	
cfm	rpm	bhp	rpm	bhp	rpm	bhp	rpm	bhp	rpm	bhp	rpm	bhp	rpm	bhp	rpm	bhp	rpm	bhp	rpm	bhp
	3-hp Standard Motor & Drive								3-hp Standard Motor & High Static Drive											
4800	674	2.38	697	2.52	719	2.66	739	2.78	759	2.92	779	3.04	797	3.16	816	3.29	834	3.41	851	3.52
5400	696	2.92	718	3.08	740	3.24	760	3.40	780	3.55	799	3.71	819	3.86	837	4.01	854	4.15	872	4.29
6000	718	3.50	740	3.70	761	3.89	782	4.08	801	4.25	821	4.44	840	4.61	857	4.78	876	4.96	893	5.13
6600	740	4.15	762	4.38	783	4.59	803	4.81	824	5.02	842	5.22	861	5.44	880	5.64	896	5.83	914	6.03
7200	764	4.87	785	5.13	806	5.38	826	5.61	846	5.86	864	6.09	883	6.32	901	6.55	918	6.78	935	7.00
	5-hp Oversized Motor & Standard Drive								7.5hp Oversized Motor & High Static Drive[(a)]											

Notes:
1. For Standard Evaporator Fan Speed (rpm), reference Table 89, p. 120.
2. For High Evaporator Fan Speed (rpm), reference Table 90, p. 122.
3. For Oversized Evaporator Fan Speed (rpm), reference Table 91, p. 122.
4. Fan motor heat (MBh) = 3.15 x Fan bhp.
5. Data includes pressure drop due to standard filters and wet coils. No accessories or options are included in pressure drop data.
6. For all non-standard sheave combinations, please refer to accessory installer's guides ACC-SVN34*-EN and ACC-SVN72*-EN.
7. Refer to Table 92, p. 123 to determine additional static pressure drop due to other options/accessories.
8. Factory supplied motors, in commercial equipment, are definite purpose motors, specifically designed and tested to operate reliably and continuously at all cataloged conditions. Using the full horsepower range of our fan motors as shown in our tabular data will not result in nuisance tripping or premature motor failure. Our product's warranty will not be affected.
9. For 380V/60 Hz units, the oversized motor is used as the standard motor. Refer to "Motor & Sheave/Fan Speed" tables to determine operating ranges.

(a) 7.5HP high static oversized motor offering is field installed only.

Table 52. Evaporator fan performance 15 tons with gas heat YSH180G standard refrigeration system horizontal

	External Static Pressure (Inches of Water)																			
	0.10		0.20		0.30		0.40		0.50		0.60		0.70		0.80		0.90		1.00	
cfm	rpm	bhp	rpm	bhp	rpm	bhp	rpm	bhp	rpm	bhp	rpm	bhp	rpm	bhp	rpm	bhp	rpm	bhp	rpm	bhp
	3-hp Standard Motor & Low Static Drive												3-hp Standard Motor & Drive							
4800	419	0.77	455	0.92	487	1.07	515	1.22	548	1.39	578	1.55	607	1.73	634	1.90	659	2.08	681	2.26
5400	462	1.05	496	1.22	526	1.39	553	1.56	578	1.72	603	1.89	635	2.10	661	2.29	687	2.49	711	2.68
6000	506	1.39	537	1.59	566	1.78	592	1.97	616	2.15	639	2.33	661	2.52	690	2.76	713	2.95	736	3.17
6600	550	1.81	579	2.03	606	2.24	631	2.45	654	2.65	677	2.86	698	3.06	717	3.25	738	3.46	766	3.74
7200	595	2.30	622	2.54	648	2.77	671	3.00	694	3.23	715	3.46	735	3.68	755	3.89	773	4.11	791	4.33
											5hp Oversized Motor & Low Static Drive									

Continued

	External Static Pressure (Inches of Water)																			
	1.10		1.20		1.30		1.40		1.50		1.60		1.70		1.80		1.90		2.00	
cfm	rpm	bhp	rpm	bhp	rpm	bhp	rpm	bhp	rpm	bhp	rpm	bhp	rpm	bhp	rpm	bhp	rpm	bhp	rpm	bhp
	3-hp Standard Motor & Drive				3-hp Standard Motor & High Static Drive															
4800	704	2.44	728	2.63	750	2.83	772	3.03	793	3.23	813	3.43	833	3.64	852	3.85	872	4.07	890	4.28
5400	732	2.88	753	3.08	774	3.29	795	3.49	815	3.70	835	3.92	855	4.15	874	4.38	892	4.60	911	4.84
6000	761	3.40	783	3.61	803	3.82	822	4.04	841	4.27	859	4.50	877	4.73	896	4.95	914	5.18	933	5.44
6600	787	3.95	809	4.20	830	4.45	850	4.68	870	4.92	887	5.15	905	5.39	921	5.64	939	5.90	955	6.15
7200	814	4.60	838	4.88	856	5.11	876	5.37	896	5.64	916	5.91	934	6.16	951	6.42	968	6.68	983	6.93
	5-hp Oversized Motor & Standard Drive										7.5hp Oversized Motor & High Static Drive[(a)]									

Notes:

1. For Standard Evaporator Fan Speed (rpm), reference Table 89, p. 120.
2. For High Evaporator Fan Speed (rpm), reference Table 90, p. 122.
3. For Oversized Evaporator Fan Speed (rpm), reference Table 91, p. 122.
4. Fan motor heat (MBh) = 3.15 x Fan bhp.
5. Data includes pressure drop due to standard filters and wet coils. No accessories or options are included in pressure drop data.
6. For all non-standard sheave combinations, please refer to accessory installer's guides ACC-SVN34*-EN and ACC-SVN72*-EN.
7. Refer to Table 92, p. 123 to determine additional static pressure drop due to other options/accessories.
8. Factory supplied motors, in commercial equipment, are definite purpose motors, specifically designed and tested to operate reliably and continuously at all cataloged conditions. Using the full horsepower range of our fan motors as shown in our tabular data will not result in nuisance tripping or premature motor failure. Our product's warranty will not be affected.
9. For 380V/60 Hz units, the oversized motor is used as the standard motor. Refer to "Motor & Sheave/Fan Speed" tables to determine operating ranges.

(a) 7.5HP high static oversized motor offering is field installed only.

Table 53. Evaporator fan performance 17½ tons TSD210/211G standard refrigeration system downflow

	External Static Pressure (Inches of Water)																			
	0.10		0.20		0.30		0.40		0.50		0.60		0.70		0.80		0.90		1.00	
cfm	rpm	bhp	rpm	bhp	rpm	bhp	rpm	bhp	rpm	bhp	rpm	bhp	rpm	bhp	rpm	bhp	rpm	bhp	rpm	bhp
	5-hp Standard Motor & Low Static Drive Accessory																			
5600	-	-	424	1.01	474	1.31	509	1.52	540	1.72	567	1.87	594	2.08	620	2.26	643	2.43	664	2.60
6300	392	001	450	1.27	498	1.60	541	1.93	572	2.16	599	2.39	622	2.55	648	2.75	671	2.99	695	3.20
7000	421	001	477	1.56	524	1.93	566	2.30	603	2.67	631	2.93	656	3.16	679	3.40	700	3.57	723	3.80
7700	451	001	505	1.90	551	2.31	591	2.72	628	3.12	662	3.53	689	3.84	711	4.06	733	4.37	752	4.58
8400	482	002	533	2.30	578	2.75	617	3.20	653	3.64	687	4.09	718	4.53	745	4.91	764	5.13	785	5.42
													5-hp Standard Motor & Drive							

Continued

	External Static Pressure (Inches of Water)																			
	1.10		1.20		1.30		1.40		1.50		1.60		1.70		1.80		1.90		2.00	
cfm	rpm	bhp	rpm	bhp	rpm	bhp	rpm	bhp	rpm	bhp	rpm	bhp	rpm	bhp	rpm	bhp	rpm	bhp	rpm	bhp
	5-hp Standard Motor & Drive										5-hp Standard Motor & High Static Drive									
5600	685	2.77	705	2.93	724	3.09	743	3.26	761	3.42	778	3.58	795	3.73	812	3.90	828	4.06	843	4.20
6300	715	3.39	734	3.58	753	3.76	772	3.96	790	4.14	807	4.33	824	4.51	840	4.69	856	4.87	871	5.04
7000	744	4.08	765	4.31	784	4.52	802	4.74	820	4.95	837	5.16	853	5.37	870	5.58	885	5.78	901	5.98
7700	772	4.77	792	5.02	812	5.34	831	5.60	850	5.85	867	6.09	884	6.32	900	6.56	914	6.78	930	7.01
8400	805	5.76	822	5.96	841	6.17	860	6.45	878	6.77	895	7.09	913	7.37	930	7.64	945	7.88	961	8.15
	7.5-hp Oversized Motor & Drive																			

Notes:
1. For Standard Evaporator Fan Speed (rpm), reference Table 86, p. 119.
2. For High Evaporator Fan Speed (rpm), reference Table 87, p. 119.
3. For Oversized Evaporator Fan Speed (rpm), reference Table 88, p. 120.
4. Fan motor heat (MBh) = 3.15 x Fan bhp.
5. Data includes pressure drop due to standard filters and wet coils. No accessories or options are included in pressure drop data.
6. For all non-standard sheave combinations, please refer to accessory installer's guides ACC-SVN34*-EN and ACC-SVN72*-EN.
7. Refer to Table 89, p. 120 to determine additional static pressure drop due to other options/accessories.
8. Factory supplied motors, in commercial equipment, are definite purpose motors, specifically designed and tested to operate reliably and continuously at all cataloged conditions. Using the full horsepower range of our fan motors as shown in our tabular data will not result in nuisance tripping or premature motor failure. Our product's warranty will not be affected.
9. For 380V/60 Hz units, the oversized motor is used as the standard motor. Refer to "Motor & Sheave/Fan Speed" tables to determine operating range.

Table 54. Evaporator fan performance 17½ tons TSH210/211G standard refrigeration system horizontal

	External Static Pressure (Inches of Water)																			
	0.10		0.20		0.30		0.40		0.50		0.60		0.70		0.80		0.90		1.00	
cfm	rpm	bhp	rpm	bhp	rpm	bhp	rpm	bhp	rpm	bhp	rpm	bhp	rpm	bhp	rpm	bhp	rpm	bhp	rpm	bhp
5-hp Standard Motor & Low Static Drive																				
5600	439	1.10	487	1.40	530	1.68	568	1.98	591	2.10	614	2.32	634	2.53	654	2.76	673	2.98	692	3.20
6300	477	1.45	531	1.85	567	2.15	603	2.46	637	2.80	658	2.91	678	3.15	698	3.40	716	3.64	734	3.89
7000	517	1.87	571	2.36	605	2.70	641	3.05	672	3.39	703	3.78	725	3.97	742	4.15	760	4.42	777	4.69
7700	557	2.38	609	2.92	649	3.38	676	3.73	710	4.12	738	4.49	765	4.90	790	5.28	805	5.32	822	5.61
8400	598	2.97	647	3.57	690	4.16	719	4.54	745	4.95	776	5.38	801	5.78	826	6.20	852	6.67	868	6.88
							5-hp Standard Motor & Drive						7.5-hp Oversized Motor & Drive							

Continued

	External Static Pressure (Inches of Water)																			
	1.10		1.20		1.30		1.40		1.50		1.60		1.70		1.80		1.90		2.00	
cfm	rpm	bhp	rpm	bhp	rpm	bhp	rpm	bhp	rpm	bhp	rpm	bhp	rpm	bhp	rpm	bhp	rpm	bhp	rpm	bhp
5-hp Standard Motor & Drive																	5-hp Standard Motor & High Static Drive			
5600	709	3.42	726	3.65	743	3.88	759	4.11	774	4.34	789	4.57	803	4.81	817	5.05	831	5.28	845	5.54
6300	751	4.14	767	4.39	783	4.64	798	4.89	814	5.15	829[(a)]	5.41	843	5.67	857	5.92	870	6.18	884	6.46
7000	794	4.97	810	5.24	825	5.51	840	5.79	855	6.07	870	6.35	884	6.63	897	6.92	911	7.20	924	7.48
7700	838	5.92	854	6.22	869	6.52	883	6.81	898	7.13	912	7.43	925	7.72	939	8.04	952	8.34	-	-
8400	883	7.00	898	7.32	913	7.65	927	7.98	941	8.31	954	8.62	-	-	-	-	-	-	-	-
7.5-hp Oversized Motor & High Static Drive																				

Notes:
1. For Standard Evaporator Fan Speed (rpm), reference Table 86, p. 119.
2. For High Evaporator Fan Speed (rpm), reference Table 87, p. 119.
3. For Oversized Evaporator Fan Speed (rpm), reference Table 88, p. 120.
4. Fan motor heat (MBh) = 3.15 x Fan bhp.
5. Data includes pressure drop due to standard filters and wet coils. No accessories or options are included in pressure drop data.
6. For all non-standard sheave combinations, please refer to accessory installer's guides ACC-SVN34*-EN and ACC-SVN72*-EN.
7. Refer to Table 89, p. 120 to determine additional static pressure drop due to other options/accessories.
8. Factory supplied motors, in commercial equipment, are definite purpose motors, specifically designed and tested to operate reliably and continuously at all cataloged conditions. Using the full horsepower range of our fan motors as shown in our tabular data will not result in nuisance tripping or premature motor failure. Our product's warranty will not be affected.
9. For 380V/60 Hz units, the oversized motor is used as the standard motor. Refer to "Motor & Sheave/Fan Speed" tables to determine operating range.

(a) 5-hp Standard Motor & High Static Drive

Table 55. Evaporator fan performance 17½ tons with gas heat YSD210/211G standard refrigeration system downflow

	External Static Pressure (Inches of Water)																			
	0.10		0.20		0.30		0.40		0.50		0.60		0.70		0.80		0.90		1.00	
cfm	rpm	bhp	rpm	bhp	rpm	bhp	rpm	bhp	rpm	bhp	rpm	bhp	rpm	bhp	rpm	bhp	rpm	bhp	rpm	bhp
5-hp Standard Motor & Low Static Drive																				
5600	434	1.07	472	1.30	504	1.49	533	1.68	560	1.82	585	2.01	611	2.20	634	2.37	655	2.53	676	2.69
6300	478	1.45	514	1.71	546	1.97	571	2.15	598	2.37	622	2.55	645	2.71	668	2.96	691	3.16	711	3.35
7000	522	1.92	556	2.21	587	2.50	615	2.79	636	2.96	660	3.20	683	3.43	703	3.59	724	3.81	745	4.09
7700	568	2.48	599	2.81	628	3.13	655	3.45	680	3.75	699	3.93	720	4.18	742	4.47	761	4.67	779	4.85
8400	614	3.15	643	3.52	671	3.87	696	4.21	720	4.56	742	4.88	760	5.08	780	5.32	799	5.67	818[a]	5.92
							5-hp Standard Motor & Drive													

Continued

	External Static Pressure (Inches of Water)																			
	1.10		1.20		1.30		1.40		1.50		1.60		1.70		1.80		1.90		2.00	
cfm	rpm	bhp	rpm	bhp	rpm	bhp	rpm	bhp	rpm	bhp	rpm	bhp	rpm	bhp	rpm	bhp	rpm	bhp	rpm	bhp
	5-hp Standard Motor & Drive																5-hp Standard Motor & High Static Drive			
5600	695	2.85	714	3.01	732	3.16	750	3.32	766	3.47	783	3.62	799	3.77	814	3.92	830	4.07	845	4.22
6300	730	3.53	748	3.71	766	3.90	783	4.07	800	4.25	816	4.42	832	4.60	847	4.77	862	4.94	876	5.11
7000	765	4.31	784	4.53	801	4.73	818	4.93	834	5.13	850	5.33	866	5.53	881	5.73	896	5.93	910	6.11
7700	798	5.11	817	5.41	836	5.67	854	5.90	870	6.12	886	6.36	901	6.58	916	6.79	930	7.02	945	7.24
8400	835	6.11	852	6.31	870	6.62	886	6.94	904	7.22	921	7.50	937	7.75	952	8.00	966	8.24	980	8.49
	7.5-hp Oversized Motor & Drive						7.5-hp Oversized Motor & High Static Drive													

Notes:
1. For Standard Evaporator Fan Speed (rpm), reference Table 86, p. 119.
2. For High Evaporator Fan Speed (rpm), reference Table 87, p. 119.
3. For Oversized Evaporator Fan Speed (rpm), reference Table 88, p. 120.
4. Fan motor heat (MBh) = 3.15 x Fan bhp.
5. Data includes pressure drop due to standard filters and wet coils. No accessories or options are included in pressure drop data.
6. For all non-standard sheave combinations, please refer to accessory installer's guides ACC-SVN34*-EN and ACC-SVN72*-EN.
7. Refer to Table 89, p. 120 to determine additional static pressure drop due to other options/accessories.
8. Factory supplied motors, in commercial equipment, are definite purpose motors, specifically designed and tested to operate reliably and continuously at all cataloged conditions. Using the full horsepower range of our fan motors as shown in our tabular data will not result in nuisance tripping or premature motor failure. Our product's warranty will not be affected.
9. For 380V/60 Hz units, the oversized motor is used as the standard motor. Refer to "Motor & Sheave/Fan Speed" tables to determine operating range.

(a) 7.5-hp Oversized Motor & Drive

Table 56. Evaporator fan performance 17½ tons with gas heat YSH210/211G standard refrigeration system horizontal

	External Static Pressure (Inches of Water)																			
	0.10		0.20		0.30		0.40		0.50		0.60		0.70		0.80		0.90		1.00	
cfm	rpm	bhp	rpm	bhp	rpm	bhp	rpm	bhp	rpm	bhp	rpm	bhp	rpm	bhp	rpm	bhp	rpm	bhp	rpm	bhp
	5-hp Standard Motor & Low Static Drive														5-hp Standard Motor & Drive					
5600	479	1.35	523	1.63	560	1.91	584	2.03	607	2.25	630	2.48	651	2.72	671	2.95	690	3.18	709	3.42
6300	531	1.85	566	2.14	604	2.47	637	2.79	655	2.87	677	3.13	697	3.39	716	3.64	735	3.91	753	4.17
7000	583	2.48	613	2.80	649	3.14	678	3.47	709	3.85	726	3.96	744	4.17	763	4.46	780	4.74	798	5.03
7700	636	3.24	662	3.55	692	3.91	726	4.33	750	4.67	779	5.11	795	5.31	810	5.40	827	5.72	844	6.03
8400	687	4.11	713	4.45	739	4.87	768	5.26	798	5.73	819	6.08	846	6.57	864	6.90	875	6.84	891[a]	7.17
									7.5-hp Oversized Motor & Drive											

Continued

	External Static Pressure (Inches of Water)																			
	1.10		1.20		1.30		1.40		1.50		1.60		1.70		1.80		1.90		2.00	
cfm	rpm	bhp	rpm	bhp	rpm	bhp	rpm	bhp	rpm	bhp	rpm	bhp	rpm	bhp	rpm	bhp	rpm	bhp	rpm	bhp
	5-hp Standard Motor & Drive												5-hp Standard Motor & High Static Drive							
5600	727	3.66	744	3.91	761	4.15	777	4.39	793	4.65	808	4.88	823	5.13	837	5.39	851	5.64	865	5.90
6300	770	4.44	787	4.70	803	4.96	819	5.23	835	5.51	849	5.78	864	6.06	878	6.33	892	6.61	905	6.88
7000	815	5.33	831	5.62	847	5.91	862	6.20	877	6.50	892	6.80	906	7.10	920	7.41	933	7.70	947	8.01
7700	860	6.35	876	6.67	892	7.00	907	7.31	921	7.63	935	7.95	949	8.27	963	8.60	-	-	-	-
8400	907	7.52	922	7.86	937	8.21	952	8.56	-	-	-	-	-	-	-	-	-	-	-	-
	7.5-hp Oversized Motor & High Static Drive																			

Notes:
1. For Standard Evaporator Fan Speed (rpm), reference Table 86, p. 119.
2. For High Evaporator Fan Speed (rpm), reference Table 87, p. 119.
3. For Oversized Evaporator Fan Speed (rpm), reference Table 88, p. 120.
4. Fan motor heat (MBh) = 3.15 x Fan bhp.
5. Data includes pressure drop due to standard filters and wet coils. No accessories or options are included in pressure drop data.
6. For all non-standard sheave combinations, please refer to accessory installer's guides ACC-SVN34*-EN and ACC-SVN72*-EN.
7. Refer to Table 89, p. 120 to determine additional static pressure drop due to other options/accessories.
8. Factory supplied motors, in commercial equipment, are definite purpose motors, specifically designed and tested to operate reliably and continuously at all cataloged conditions. Using the full horsepower range of our fan motors as shown in our tabular data will not result in nuisance tripping or premature motor failure. Our product's warranty will not be affected.
9. For 380V/60 Hz units, the oversized motor is used as the standard motor. Refer to "Motor & Sheave/Fan Speed" tables to determine operating range.

(a) 7.5-hp Oversized Motor & High Static Drive

Table 57. Evaporator fan performance 20 tons TSD240G standard refrigeration system downflow

	External Static Pressure (Inches of Water)																			
	0.10		0.20		0.30		0.40		0.50		0.60		0.70		0.80		0.90		1.00	
cfm	rpm	bhp	rpm	bhp	rpm	bhp	rpm	bhp	rpm	bhp	rpm	bhp	rpm	bhp	rpm	bhp	rpm	bhp	rpm	bhp
	5-hp Standard Motor & Low Static Drive														5-hp Standard Motor & Drive					
6400	473	1.55	504	1.76	533	1.96	560	2.15	585	2.33	609	2.51	633	2.69	656	2.89	677	3.10	699	3.31
7200	525	2.18	553	2.41	579	2.58	605	2.85	628	3.05	651	3.25	673	3.46	694	3.65	715	3.86	735	4.08
8000	577	2.95	603	3.14	627	3.42	651	3.62	674	3.93	695	4.15	715	4.36	735	4.59	755	4.82	774	5.04
8800	629	3.89	653	4.06	676	4.40	698	4.63	719	4.87	740	5.21	759	5.46	778	5.69	796	5.94	814	6.19
9600	682	5.02	704	5.20	726	5.48	747	5.84	766	6.06	785	6.35	805	6.72	823	7.01	840	7.26	857	7.52
							7.5-hp Oversized Motor & Drive													

Continued

	External Static Pressure (Inches of Water)																			
	1.10		1.20		1.30		1.40		1.50		1.60		1.70		1.80		1.90		2.00	
cfm	rpm	bhp	rpm	bhp	rpm	bhp	rpm	bhp	rpm	bhp	rpm	bhp	rpm	bhp	rpm	bhp	rpm	bhp	rpm	bhp
	5-hp Standard Motor & Drive								5-hp Standard Motor & High Static Drive											
6400	721	3.53	742	3.75	762	3.96	782	4.17	802	4.39	819	4.59	837	4.81	855	5.02	872	5.22	889	5.44
7200	754	4.32	774	4.56	793	4.80	813	5.05	832	5.30	850	5.54	868	5.78	884	6.01	902	6.26	918	6.49
8000	793	5.27	810	5.51	828	5.77	845	6.03	862	6.29	881	6.58	898	6.84	916	7.12	932	7.39	948	7.65
8800	832	6.44	849	6.69	866	6.93	883	7.20	899	7.47	915	7.75	930	8.03	947	8.35	-	-	-	-
9600	873	7.78	889	8.06	905	8.33	-	-	-	-	-	-	-	-	-	-	-	-	-	-
	7.5-hp Oversized Motor & High Static Drive																			

Notes:
1. For Standard Evaporator Fan Speed (rpm), reference Table 86, p. 119.
2. For High Evaporator Fan Speed (rpm), reference Table 87, p. 119.
3. For Oversized Evaporator Fan Speed (rpm), reference Table 88, p. 120.
4. Fan motor heat (MBh) = 3.15 x Fan bhp.
5. Data includes pressure drop due to standard filters and wet coils. No accessories or options are included in pressure drop data.
6. For all non-standard sheave combinations, please refer to accessory installer's guides ACC-SVN34*-EN and ACC-SVN72*-EN.
7. Refer to Table 89, p. 120 to determine additional static pressure drop due to other options/accessories.
8. Factory supplied motors, in commercial equipment, are definite purpose motors, specifically designed and tested to operate reliably and continuously at all cataloged conditions. Using the full horsepower range of our fan motors as shown in our tabular data will not result in nuisance tripping or premature motor failure. Our product's warranty will not be affected.
9. For 380V/60 Hz units, the oversized motor is used as the standard motor. Refer to "Motor & Sheave/Fan Speed" tables to determine operating range.

Table 58. Evaporator fan performance 20 tons TSH240G standard refrigeration system horizontal

	External Static Pressure (Inches of Water)																			
	0.10		0.20		0.30		0.40		0.50		0.60		0.70		0.80		0.90		1.00	
cfm	rpm	bhp	rpm	bhp	rpm	bhp	rpm	bhp	rpm	bhp	rpm	bhp	rpm	bhp	rpm	bhp	rpm	bhp	rpm	bhp
	5-hp Standard Motor & Low Static Drive														5-hp Standard Motor & Drive					
6400	503	1.62	541	1.88	570	2.13	611	2.42	635	2.64	658	2.86	680	3.08	701	3.30	721	3.51	740	3.73
7200	555	2.20	590	2.52	620	2.81	648	3.10	685	3.43	707	3.68	729	3.93	749	4.17	768	4.42	786	4.67
8000	607	2.91	642	3.32	673	3.63	695	3.94	722	4.27	757	4.64	778	4.93	797	5.21	816	5.48	834	5.76
8800	660	3.76	695	4.25	721	4.60	748	4.97	768	5.30	793	5.66	826	6.09	847	6.42	865	6.72	883	7.03
9600	714	4.78	747	5.33	773	5.78	798	6.14	821	6.54	838	6.89	861	7.29	892	7.76	916	8.16	932	8.49
					7.5-hp Oversized Motor & Drive										7.5-hp Oversized Motor & High Static Drive					

Continued

	External Static Pressure (Inches of Water)																			
	1.10		1.20		1.30		1.40		1.50		1.60		1.70		1.80		1.90		2.00	
cfm	rpm	bhp	rpm	bhp	rpm	bhp	rpm	bhp	rpm	bhp	rpm	bhp	rpm	bhp	rpm	bhp	rpm	bhp	rpm	bhp
	5-hp Standard Motor & Drive				5-hp Standard Motor & High Static Drive															
6400	759	3.95	776	4.16	794	4.37	810	4.59	826	4.80	843	5.02	858	5.23	873	5.44	887	5.65	902	5.87
7200	805	4.91	822	5.15	838	5.39	855	5.64	871	5.88	886	6.12	901	6.35	916	6.60	931	6.84	944	7.07
8000	851	6.03	868	6.30	885	6.58	900	6.85	916	7.12	931	7.38	945	7.65	960	7.93	974	8.19	988	8.46
8800	899	7.33	916	7.63	932	7.94	947	8.24	962	8.53	-	-	-	-	-	-	-	-	-	-
9600	-	-	-	-	-	-	-	-	-	-	-	-	-	-	-	-	-	-	-	-
	7.5-hp Oversized Motor & High Static Drive																			

Notes:
1. For Standard Evaporator Fan Speed (rpm), reference Table 86, p. 119.
2. For High Evaporator Fan Speed (rpm), reference Table 87, p. 119.
3. For Oversized Evaporator Fan Speed (rpm), reference Table 88, p. 120.
4. Fan motor heat (MBh) = 3.15 x Fan bhp.
5. Data includes pressure drop due to standard filters and wet coils. No accessories or options are included in pressure drop data.
6. For all non-standard sheave combinations, please refer to accessory installer's guides ACC-SVN34*-EN and ACC-SVN72*-EN.
7. Refer to Table 89, p. 120 to determine additional static pressure drop due to other options/accessories.
8. Factory supplied motors, in commercial equipment, are definite purpose motors, specifically designed and tested to operate reliably and continuously at all cataloged conditions. Using the full horsepower range of our fan motors as shown in our tabular data will not result in nuisance tripping or premature motor failure. Our product's warranty will not be affected.
9. For 380V/60 Hz units, the oversized motor is used as the standard motor. Refer to "Motor & Sheave/Fan Speed" tables to determine operating range.

Table 59. Evaporator fan performance 20 tons with gas heat YSD240G standard refrigeration system downflow

	External Static Pressure (Inches of Water)																			
	0.10		0.20		0.30		0.40		0.50		0.60		0.70		0.80		0.90		1.00	
cfm	rpm	bhp	rpm	bhp	rpm	bhp	rpm	bhp	rpm	bhp	rpm	bhp	rpm	bhp	rpm	bhp	rpm	bhp	rpm	bhp
	5-hp Standard Motor & Low Static Drive														5-hp Standard Motor & Drive					
6400	497	1.73	526	1.90	553	2.11	579	2.29	604	2.47	628	2.65	651	2.85	673	3.06	695	3.27	717	3.49
7200	552	2.39	578	2.58	603	2.82	627	3.04	650	3.24	672	3.45	694	3.65	715	3.86	735	4.09	754	4.32
8000	608	3.21	632	3.46	654	3.67	676	3.95	698	4.18	719	4.41	739	4.64	759	4.87	778	5.09	797	5.32
8800	664	4.20	686	4.52	707	4.71	727	5.00	747	5.30	767	5.56	786	5.80	804	6.06	822	6.31	840	6.56
9600	721	5.39	741	5.76	760	6.00	780	6.24	797	6.57	815	6.90	834	7.17	852	7.44	869	7.72	886	8.00
			7.5-hp Oversized Motor & Drive														7.5-hp Oversized Motor & High Static Drive			

Continued

	External Static Pressure (Inches of Water)																			
	1.10		1.20		1.30		1.40		1.50		1.60		1.70		1.80		1.90		2.00	
cfm	rpm	bhp	rpm	bhp	rpm	bhp	rpm	bhp	rpm	bhp	rpm	bhp	rpm	bhp	rpm	bhp	rpm	bhp	rpm	bhp
	5-hp Standard Motor & Drive						5-hp Standard Motor & High Static Drive													
6400	739	3.71	759	3.92	779	4.14	798	4.35	817	4.57	835	4.78	852	4.98	869	5.19	887	5.41	903	5.62
7200	774	4.56	794	4.80	814	5.06	833	5.31	851	5.55	869	5.79	886	6.03	902	6.26	919	6.51	935	6.74
8000	815	5.57	832	5.83	849	6.10	868	6.38	886	6.65	903	6.92	920	7.19	937	7.47	953	7.74	969	8.00
8800	858	6.81	875	7.06	891	7.34	907	7.62	922	7.90	938	8.19	955	8.50	-	-	-	-	-	-
9600	902	8.27	918	8.53	-	-	-	-	-	-	-	-	-	-	-	-	-	-	-	-
	7.5-hp Oversized Motor & High Static Drive																			

Notes:
1. For Standard Evaporator Fan Speed (rpm), reference Table 86, p. 119.
2. For High Evaporator Fan Speed (rpm), reference Table 87, p. 119.
3. For Oversized Evaporator Fan Speed (rpm), reference Table 88, p. 120.
4. Fan motor heat (MBh) = 3.15 x Fan bhp.
5. Data includes pressure drop due to standard filters and wet coils. No accessories or options are included in pressure drop data.
6. For all non-standard sheave combinations, please refer to accessory installer's guides ACC-SVN34*-EN and ACC-SVN72*-EN.
7. Refer to Table 89, p. 120 to determine additional static pressure drop due to other options/accessories.
8. Factory supplied motors, in commercial equipment, are definite purpose motors, specifically designed and tested to operate reliably and continuously at all cataloged conditions. Using the full horsepower range of our fan motors as shown in our tabular data will not result in nuisance tripping or premature motor failure. Our product's warranty will not be affected.
9. For 380V/60 Hz units, the oversized motor is used as the standard motor. Refer to "Motor & Sheave/Fan Speed" tables to determine operating range.

Table 60. Evaporator fan performance 20 tons with gas heat YSH240G standard refrigeration system horizontal

	External Static Pressure (Inches of Water)																			
	0.10		0.20		0.30		0.40		0.50		0.60		0.70		0.80		0.90		1.00	
cfm	rpm	bhp	rpm	bhp	rpm	bhp	rpm	bhp	rpm	bhp	rpm	bhp	rpm	bhp	rpm	bhp	rpm	bhp	rpm	bhp
	5-hp Standard Motor & Low Static												5-hp Standard Motor & Drive							
6400	533	1.82	560	2.05	599	2.33	628	2.57	653	2.81	676	3.04	698	3.27	720	3.50	740	3.73	759	3.95
7200	592	2.54	620	2.82	643	3.04	680	3.37	705	3.64	727	3.91	748	4.17	769	4.43	789	4.70	807	4.95
8000	650	3.40	678	3.70	698	3.98	724	4.28	757	4.64	779	4.95	800	5.24	819	5.53	838	5.83	856	6.11
8800	709	4.45	736	4.77	758	5.15	774	5.39	801	5.77	832	6.17	852	6.50	871	6.82	889	7.14	907	7.47
9600	769	5.71	794	6.08	816	6.44	833	6.80	849	7.08	876	7.53	904	7.95	924	8.32	-	-	-	-
	7.5-hp Oversized Motor & Standard Drive												7.5-hp Oversized Motor & High Static Drive							

Continued

	External Static Pressure (Inches of Water)																			
	1.10		1.20		1.30		1.40		1.50		1.60		1.70		1.80		1.90		2.00	
cfm	rpm	bhp	rpm	bhp	rpm	bhp	rpm	bhp	rpm	bhp	rpm	bhp	rpm	bhp	rpm	bhp	rpm	bhp	rpm	bhp
	5-hp Standard Motor & Drive						5-hp Standard Motor & High Static Drive													
6400	778	4.18	796	4.40	814	4.63	831	4.85	847	5.08	863	5.30	879	5.53	895	5.76	909	5.97	924	6.20
7200	825	5.21	843	5.46	861	5.72	876	5.96	893	6.22	909	6.48	924	6.74	939	6.99	953	7.23	968	7.49
8000	874	6.40	891	6.69	907	6.97	924	7.26	939	7.54	955	7.82	970	8.11	984	8.38	-	-	-	-
8800	924	7.79	941	8.11	957	8.43	-	-	-	-	-	-	-	-	-	-	-	-	-	-
9600	-	-	-	-	-	-	-	-	-	-	-	-	-	-	-	-	-	-	-	-
	7.5-hp Oversized Motor & High Static Drive																			

Notes:

1. For Standard Evaporator Fan Speed (rpm), reference Table 86, p. 119.
2. For High Evaporator Fan Speed (rpm), reference Table 87, p. 119.
3. For Oversized Evaporator Fan Speed (rpm), reference Table 88, p. 120.
4. Fan motor heat (MBh) = 3.15 x Fan bhp.
5. Data includes pressure drop due to standard filters and wet coils. No accessories or options are included in pressure drop data.
6. For all non-standard sheave combinations, please refer to accessory installer's guides ACC-SVN34*-EN and ACC-SVN72*-EN.
7. Refer to Table 89, p. 120 to determine additional static pressure drop due to other options/accessories.
8. Factory supplied motors, in commercial equipment, are definite purpose motors, specifically designed and tested to operate reliably and continuously at all cataloged conditions. Using the full horsepower range of our fan motors as shown in our tabular data will not result in nuisance tripping or premature motor failure. Our product's warranty will not be affected.
9. For 380V/60 Hz units, the oversized motor is used as the standard motor. Refer to "Motor & Sheave/Fan Speed" tables to determine operating range.

Table 61. Evaporator fan performance 25 tons TSD300/301G standard refrigeration system downflow

	External Static Pressure (Inches of Water)																			
	0.10		0.20		0.30		0.40		0.50		0.60		0.70		0.80		0.90		1.00	
cfm	rpm	bhp	rpm	bhp	rpm	bhp	rpm	bhp	rpm	bhp	rpm	bhp	rpm	bhp	rpm	bhp	rpm	bhp	rpm	bhp
	7.5-hp Standard Motor & Low Static Drive														7.5-hp Standard Motor & Drive					
7000	532	2.08	559	2.25	588	2.49	612	2.62	637	2.87	662	3.09	686	3.28	708	3.48	729	3.68	750	3.87
7500	566	2.52	593	2.73	618	2.95	642	3.12	665	3.33	689	3.59	712	3.82	734	4.03	755	4.24	775	4.45
8000	600	3.04	626	3.27	648	3.44	674	3.72	694	3.86	717	4.14	739	4.40	760	4.65	781	4.87	800	5.09
8500	635	3.62	659	3.87	680	4.03	705	4.35	725	4.52	745	4.72	766	5.03	787	5.31	807	5.57	826	5.80
9000	670	4.28	692	4.52	713	4.73	734	4.97	757	5.29	775	5.43	794	5.69	814	6.01	834	6.31	853	6.58
9500	705	5.00	725	5.24	747	5.51	764	5.68	787	6.07	806	6.28	823	6.44	842	6.76	861	7.10	880	7.41
10000	740	5.81	758	6.04	781	6.37	797	6.54	816	6.85	838	7.23	854	7.38	871	7.59	889	7.93	907	8.29
10500	775	6.71	793	6.93	813	7.27	831	7.50	847	7.72	868	8.16	886	8.43	902	8.59	-	-	-	-
11000	811	7.69	827	7.93	846	8.25	865	8.56	-	-	-	-	-	-	-	-	-	-	-	-
													7.5-hp Standard Motor & High Static Drive							

Continued

	External Static Pressure (Inches of Water)																			
	1.10		1.20		1.30		1.40		1.50		1.60		1.70		1.80		1.90		2.00	
cfm	rpm	bhp	rpm	bhp	rpm	bhp	rpm	bhp	rpm	bhp	rpm	bhp	rpm	bhp	rpm	bhp	rpm	bhp	rpm	bhp
	7.5-hp Standard Motor & Drive																			
7000	769	4.05	788	4.24	806	4.42	824	4.60	841	4.78	858	4.95	874	5.12	890	5.29	906	5.46	920	5.62
7500	794	4.66	813	4.86	831	5.06	848	5.26	865	5.45	881	5.64	897	5.83	913	6.01	928	6.20	944	6.39
8000	819	5.31	837	5.54	855	5.76	873	5.97	889	6.18	905	6.39	921	6.60	937	6.80	952	7.00	967	7.21
8500	845	6.03	863	6.27	881	6.52	897	6.75	914	6.98	930	7.21	946	7.43	962	7.66	977	7.88	991	8.09
9000	872	6.84	889	7.08	906	7.34	923	7.59	939	7.84	956	8.09	971	8.33	986	8.57	-	-	-	-
9500	898	7.70	915	7.97	932	8.23	949	8.50	-	-	-	-	-	-	-	-	-	-	-	-
10000	925	8.62	-	-	-	-	-	-	-	-	-	-	-	-	-	-	-	-	-	-
10500	-	-	-	-	-	-	-	-	-	-	-	-	-	-	-	-	-	-	-	-
11000	-	-	-	-	-	-	-	-	-	-	-	-	-	-	-	-	-	-	-	-
	7.5-hp Standard Motor & High Static Drive Accessory																			

Notes:
1. For Standard Evaporator Fan Speed (rpm), reference Table 86, p. 119.
2. For High Evaporator Fan Speed (rpm), reference Table 87, p. 119.
3. For Oversized Evaporator Fan Speed (rpm), reference Table 88, p. 120.
4. Fan motor heat (MBh) = 3.15 x Fan bhp.
5. Data includes pressure drop due to standard filters and wet coils. No accessories or options are included in pressure drop data.
6. For all non-standard sheave combinations, please refer to accessory installer's guides ACC-SVN34*-EN and ACC-SVN72*-EN.
7. Refer to Table 89, p. 120 to determine additional static pressure drop due to other options/accessories.
8. Factory supplied motors, in commercial equipment, are definite purpose motors, specifically designed and tested to operate reliably and continuously at all cataloged conditions. Using the full horsepower range of our fan motors as shown in our tabular data will not result in nuisance tripping or premature motor failure. Our product's warranty will not be affected.

Table 62. Evaporator fan performance 25 tons TSH300/301G standard refrigeration system horizontal

	External Static Pressure (Inches of Water)																			
	0.10		0.20		0.30		0.40		0.50		0.60		0.70		0.80		0.90		1.00	
cfm	rpm	bhp	rpm	bhp	rpm	bhp	rpm	bhp	rpm	bhp	rpm	bhp	rpm	bhp	rpm	bhp	rpm	bhp	rpm	bhp
	7.5-hp Standard Motor & Low Static Drive										7.5-hp Standard Motor & Drive									
7000	-	-	589	2.44	620	2.65	652	2.96	688	3.30	707	3.52	724	3.73	741	3.94	758	4.15	774	4.36
7500	583	2.57	618	2.85	651	3.18	682	3.56	715	3.78	742	4.12	759	4.35	775	4.58	791	4.80	807	5.03
8000	617	3.09	649	3.33	685	3.79	711	3.99	739	4.37	774	4.75	794	5.04	810	5.29	825	5.53	841	5.77
8500	652	3.67	681	3.92	717	4.39	742	4.65	770	5.10	794	5.31	828	5.79	845	6.08	860	6.33	875	6.60
9000	687	4.33	715	4.60	747	5.00	775	5.44	798	5.65	824	6.18	850	6.42	881	6.94	896	7.23	910	7.50
9500	722	5.05	749	5.34	776	5.66	808	6.26	829	6.49	853	6.92	877	7.32	904	7.67	931	8.20	945	8.48
10000	757	5.86	783	6.17	807	6.45	839	7.06	863	7.48	882	7.66	907	8.36	928	8.58	-	-	-	-
10500	792	6.75	817	7.08	840	7.37	868	7.87	895	8.50	-	-	-	-	-	-	-	-	-	-
11000	828	7.73	852	8.07	874	8.40	-	-	-	-	-	-	-	-	-	-	-	-	-	-
									7.5-hp Standard Motor & High Static Drive											

Continued

	External Static Pressure (Inches of Water)																			
	1.10		1.20		1.30		1.40		1.50		1.60		1.70		1.80		1.90		2.00	
cfm	rpm	bhp	rpm	bhp	rpm	bhp	rpm	bhp	rpm	bhp	rpm	bhp	rpm	bhp	rpm	bhp	rpm	bhp	rpm	bhp
	7.5-hp Standard Motor & Drive																			
7000	789	4.57	803	4.77	818	4.99	832	5.20	845	5.40	859	5.61	872	5.83	885	6.03	897	6.24	909	6.45
7500	821	5.25	836	5.48	850	5.70	864	5.93	877	6.15	891	6.38	904	6.61	915	6.82	928	7.05	940	7.27
8000	855	6.01	869	6.25	883	6.50	897	6.74	910	6.97	922	7.21	935	7.45	947	7.68	959	7.92	972	8.18
8500	889	6.85	903	7.11	916	7.36	930	7.62	942	7.87	955	8.12	967	8.38	-	-	-	-	-	-
9000	924	7.77	937	8.04	950	8.31	963	8.59	-	-	-	-	-	-	-	-	-	-	-	-
9500	-	-	-	-	-	-	-	-	-	-	-	-	-	-	-	-	-	-	-	-
10000	-	-	-	-	-	-	-	-	-	-	-	-	-	-	-	-	-	-	-	-
10500	-	-	-	-	-	-	-	-	-	-	-	-	-	-	-	-	-	-	-	-
11000	-	-	-	-	-	-	-	-	-	-	-	-	-	-	-	-	-	-	-	-
	7.5-hp Standard Motor & High Static Drive Accessory																			

Notes:

1. For Standard Evaporator Fan Speed (rpm), reference Table 86, p. 119.
2. For High Evaporator Fan Speed (rpm), reference Table 87, p. 119.
3. For Oversized Evaporator Fan Speed (rpm), reference Table 88, p. 120.
4. Fan motor heat (MBh) = 3.15 x Fan bhp.
5. Data includes pressure drop due to standard filters and wet coils. No accessories or options are included in pressure drop data.
6. For all non-standard sheave combinations, please refer to accessory installer's guides ACC-SVN34*-EN and ACC-SVN72*-EN.
7. Refer to Table 89, p. 120 to determine additional static pressure drop due to other options/accessories.
8. Factory supplied motors, in commercial equipment, are definite purpose motors, specifically designed and tested to operate reliably and continuously at all cataloged conditions. Using the full horsepower range of our fan motors as shown in our tabular data will not result in nuisance tripping or premature motor failure. Our product's warranty will not be affected.

Table 63. Evaporator fan performance 25 tons with gas heat YSD300/301G standard refrigeration system downflow

	External Static Pressure (Inches of Water)																			
	0.10		0.20		0.30		0.40		0.50		0.60		0.70		0.80		0.90		1.00	
cfm	rpm	bhp	rpm	bhp	rpm	bhp	rpm	bhp	rpm	bhp	rpm	bhp	rpm	bhp	rpm	bhp	rpm	bhp	rpm	bhp
	7.5-hp Standard Motor & Low Static Drive												7.5-hp Standard Motor & Drive							
7000	554	2.22	580	2.43	604	2.56	629	2.79	654	3.02	678	3.22	700	3.41	721	3.61	742	3.80	762	3.98
7500	590	2.72	614	2.90	638	3.10	660	3.28	684	3.54	707	3.77	729	3.98	749	4.19	769	4.40	789	4.60
8000	627	3.28	647	3.44	672	3.71	692	3.84	714	4.10	736	4.37	758	4.62	778	4.84	798	5.06	816	5.28
8500	663	3.90	682	4.05	706	4.37	726	4.53	745	4.73	766	5.03	787	5.31	807	5.56	826	5.80	844	6.03
9000	699	4.60	718	4.77	739	5.06	760	5.31	778	5.45	797	5.74	817	6.05	836	6.34	855	6.62	873	6.86
9500	735	5.37	754	5.58	773	5.82	794	6.17	811	6.32	829	6.53	847	6.85	866	7.18	884	7.49	902	7.77
10000	771	6.23	790	6.47	807	6.67	827	7.06	845	7.29	861	7.44	878	7.73	896	8.08	914	8.42	-	-
10500	807	7.17	827	7.46	842	7.63	861	8.00	880	8.36	895	8.52	-	-	-	-	-	-	-	-
11000	844	8.20	863	8.54	-	-	-	-	-	-	-	-	-	-	-	-	-	-	-	-
											7.5-hp Standard Motor & High Static Drive									

Continued

	External Static Pressure (Inches of Water)																			
	1.10		1.20		1.30		1.40		1.50		1.60		1.70		1.80		1.90		2.00	
cfm	rpm	bhp	rpm	bhp	rpm	bhp	rpm	bhp	rpm	bhp	rpm	bhp	rpm	bhp	rpm	bhp	rpm	bhp	rpm	bhp
	7.5-hp Standard Motor & Drive																			
7000	780	4.17	798	4.34	817	4.53	834	4.70	850	4.87	866	5.04	882	5.21	897	5.37	913	5.54	928	5.70
7500	808	4.81	825	5.00	843	5.20	859	5.39	876	5.58	892	5.77	908	5.95	922	6.13	937	6.31	952	6.49
8000	835	5.50	852	5.72	869	5.93	886	6.15	902	6.35	918	6.55	933	6.75	948	6.95	963	7.15	978	7.35
8500	862	6.27	880	6.50	896	6.73	913	6.96	929	7.19	944	7.41	960	7.63	975	7.85	989	8.06	-	-
9000	891	7.11	908	7.36	924	7.61	940	7.86	956	8.10	971	8.34	986	8.58	-	-	-	-	-	-
9500	919	8.04	936	8.29	952	8.56	-	-	-	-	-	-	-	-	-	-	-	-	-	-
10000	-	-	-	-	-	-	-	-	-	-	-	-	-	-	-	-	-	-	-	-
10500	-	-	-	-	-	-	-	-	-	-	-	-	-	-	-	-	-	-	-	-
11000	-	-	-	-	-	-	-	-	-	-	-	-	-	-	-	-	-	-	-	-
	7.5-hp Standard Motor & High Static Drive																			

Notes:
1. For Standard Evaporator Fan Speed (rpm), reference Table 86, p. 119.
2. For High Evaporator Fan Speed (rpm), reference Table 87, p. 119.
3. For Oversized Evaporator Fan Speed (rpm), reference Table 88, p. 120.
4. Fan motor heat (MBh) = 3.15 x Fan bhp.
5. Data includes pressure drop due to standard filters and wet coils. No accessories or options are included in pressure drop data.
6. For all non-standard sheave combinations, please refer to accessory installer's guides ACC-SVN34*-EN and ACC-SVN72*-EN.
7. Refer to Table 89, p. 120 to determine additional static pressure drop due to other options/accessories.
8. Factory supplied motors, in commercial equipment, are definite purpose motors, specifically designed and tested to operate reliably and continuously at all cataloged conditions. Using the full horsepower range of our fan motors as shown in our tabular data will not result in nuisance tripping or premature motor failure. Our product's warranty will not be affected.

Table 64. Evaporator fan performance 25 tons with gas heat YSH300/301G standard refrigeration system horizontal

	External Static Pressure (Inches of Water)																			
	0.10		0.20		0.30		0.40		0.50		0.60		0.70		0.80		0.90		1.00	
cfm	rpm	bhp	rpm	bhp	rpm	bhp	rpm	bhp	rpm	bhp	rpm	bhp	rpm	bhp	rpm	bhp	rpm	bhp	rpm	bhp
	7.5-hp Standard Motor & Low Static Drive												7.5-hp Standard Motor & Drive							
7000	-	-	-	-	-	-	-	-	596	2.17	628	2.44	659	2.72	687	2.99	715	3.27	741	3.55
7500	-	-	-	-	-	-	586	2.20	618	2.48	646	2.74	676	3.04	705	3.34	732	3.63	758	3.93
8000	-	-	-	-	-	-	608	2.50	639	2.81	667	3.10	694	3.38	722	3.70	749	4.01	775	4.33
8500	-	-	-	-	604	2.58	633	2.85	660	3.16	689	3.49	715	3.78	741	4.10	767	4.43	793	4.77
9000	-	-	598	2.65	629	2.96	657	3.23	682	3.54	710	3.88	737	4.23	760	4.54	785	4.87	810	5.23
9500	598	2.80	624	3.03	654	3.38	682	3.67	707	3.97	731	4.32	757	4.68	782	5.04	804	5.36	828	5.72
10000	628	3.26	649	3.44	680	3.84	707	4.15	732	4.46	755	4.80	778	5.17	803	5.56	826	5.93	848	6.27
10500	657	3.76	676	3.91	705	4.32	732	4.68	756	4.99	779	5.33	801	5.70	824	6.10	848	6.51	869	6.88
11000	687	4.31	703	4.44	731	4.83	757	5.24	781	5.58	803	5.91	825	6.28	845	6.68	868	7.10	891	7.54
															7.5-hp Standard Motor & High Static Drive					

Continued

	External Static Pressure (Inches of Water)																			
	1.10		1.20		1.30		1.40		1.50		1.60		1.70		1.80		1.90		2.00	
cfm	rpm	bhp	rpm	bhp	rpm	bhp	rpm	bhp	rpm	bhp	rpm	bhp	rpm	bhp	rpm	bhp	rpm	bhp	rpm	bhp
	7.5-hp Standard Motor & Drive																			
7000	766	3.82	789	4.09	812	4.38	834	4.65	856	4.94	877	5.22	897	5.51	916	5.78	936	6.07	954	6.35
7500	782	4.22	806	4.52	829	4.82	851	5.11	872	5.41	893	5.71	913	6.01	933	6.31	952	6.61	969	6.90
8000	800	4.65	823	4.97	845	5.28	867	5.59	889	5.92	909	6.23	929	6.54	948	6.85	967	7.18	985	7.49
8500	817	5.10	840	5.44	862	5.76	884	6.10	905	6.44	926	6.78	945	7.11	965	7.45	983	7.77	1001	8.11
9000	834	5.58	857	5.93	880	6.30	901	6.64	922	6.99	942	7.34	962	7.72	981	8.06	1000	8.42	-	-
9500	851	6.09	874	6.46	896	6.84	919	7.22	939	7.59	959	7.96	979	8.35	-	-	-	-	-	-
10000	869	6.63	892	7.04	915	7.43	935	7.81	957	8.22	-	-	-	-	-	-	-	-	-	-
10500	889	7.24	910	7.62	932	8.04	953	8.47	-	-	-	-	-	-	-	-	-	-	-	-
11000	911	7.92	930	8.30	-	-	-	-	-	-	-	-	-	-	-	-	-	-	-	-
	7.5-hp Standard Motor & High Static Drive																			

Notes:

1. For Standard Evaporator Fan Speed (rpm), reference Table 86, p. 119.
2. For High Evaporator Fan Speed (rpm), reference Table 87, p. 119.
3. For Oversized Evaporator Fan Speed (rpm), reference Table 88, p. 120.
4. Fan motor heat (MBh) = 3.15 x Fan bhp.
5. Data includes pressure drop due to standard filters and wet coils. No accessories or options are included in pressure drop data.
6. For all non-standard sheave combinations, please refer to accessory installer's guides ACC-SVN34*-EN and ACC-SVN72*-EN.
7. Refer to Table 89, p. 120 to determine additional static pressure drop due to other options/accessories.
8. Factory supplied motors, in commercial equipment, are definite purpose motors, specifically designed and tested to operate reliably and continuously at all cataloged conditions. Using the full horsepower range of our fan motors as shown in our tabular data will not result in nuisance tripping or premature motor failure. Our product's warranty will not be affected.

Table 65. Evaporator fan performance—12½ tons—TH*150G

	External Static Pressure (Inches of Water)																			
	0.10		0.20		0.30		0.40		0.50		0.60		0.70		0.80		0.90		1.00	
cfm	rpm	bhp	rpm	bhp	rpm	bhp	rpm	bhp	rpm	bhp	rpm	bhp	rpm	bhp	rpm	bhp	rpm	bhp	rpm	bhp
	3-hp Standard Motor & Low Static Drive Accessory								3-hp Standard Motor & Drive											
2500[a]	-	-	-	-	370	0.32	417	0.43	458	0.54	496	0.66	531	0.79	564	0.91	593	1.03	623	1.16
3000[a]	-	-	-	-	386	0.42	430	0.54	472	0.67	508	0.80	543	0.94	576	1.08	606	1.22	635	1.35
3500[a]	-	-	360	0.43	404	0.55	447	0.68	486	0.81	522	0.96	556	1.11	588	1.26	619	1.40	647	1.55
4000	-	-	387	0.59	426	0.71	465	0.85	502	0.99	537	1.14	570	1.29	602	1.44	631	1.59	660	1.74
4500	377	0.66	417	0.79	452	0.92	486	1.06	521	1.20	555	1.36	586	1.50	617	1.65	645	1.80	673	1.95
5000	409	0.88	448	1.03	481	1.17	512	1.30	542	1.44	573	1.59	604	1.74	633	1.89	662	2.04	688	2.18
5500	441	1.14	479	1.30	510	1.44	539	1.58	567	1.71	594	1.85	624	2.01	652	2.16	679	2.31	705	2.46
6000	474	1.42	510	1.59	540	1.74	568	1.88	594	2.01	620	2.15	645	2.29	671	2.45	698	2.62	724	2.81
											3-hp Standard Motor & High Static Drive Accessory[b]									

Continued

	External Static Pressure (Inches of Water)																			
	1.10		1.20		1.30		1.40		1.50		1.60		1.70		1.80		1.90		2.00	
cfm	rpm	bhp	rpm	bhp	rpm	bhp	rpm	bhp	rpm	bhp	rpm	bhp	rpm	bhp	rpm	bhp	rpm	bhp	rpm	bhp
	3-hp Standard Motor & High Static Drive Accessory[b]												3-hp Standard Motor & High Static Drive Accessory[c]							
2500[a]	650	1.28	676	1.40	701	1.52	726	1.64	748	1.76	771	1.87	793	1.98	814	2.09	835	2.21	855	2.32
3000[a]	662	1.48	688	1.61	713	1.74	737	1.86	760	1.98	783	2.11	806	2.23	827	2.36	847	2.48	867	2.61
3500[a]	674	1.69	701	1.82	726	1.96	750	2.09	772	2.22	795	2.35	818	2.49	839	2.64	859	2.78	879	2.96
4000	687	1.89	713	2.04	738	2.18	762	2.32	785	2.47	808	2.62	829	2.79	851	2.97	871	3.17	891	3.40
4500	700	2.10	726	2.26	750	2.41	775	2.58	798	2.75	821	2.95	842	3.15	864	3.41	885	3.71	904	4.06
5000	714	2.34	740	2.50	765	2.68	788	2.87	811	3.09	834	3.36	855	3.66	875	4.02	897	4.49	917	5.04
5500	730	2.63	755	2.81	778	3.02	801	3.26	824	3.56	846	3.93	868	4.40	889	4.96	909	5.65	-	-
6000	748	3.02	772	3.26	795	3.54	818	3.89	839	4.32	860	4.85	881	5.51	-	-	-	-	-	-
									5-hp Oversized Motor & Drive											

Notes:
1. For Standard Evaporator Fan Speed (rpm), reference Table 86, p. 119.
2. For High Evaporator Fan Speed (rpm), reference Table 87, p. 119.
3. For Oversized Evaporator Fan Speed (rpm), reference Table 88, p. 120.
4. Fan motor heat (MBh) = 3.15 x Fan bhp.
5. Data includes pressure drop due to standard filters and wet coils. No accessories or options are included in pressure drop data.
6. For all non-standard sheave combinations, please refer to accessory installer's guides ACC-SVN34*-EN and ACC-SVN72*-EN.
7. Factory supplied motors, in commercial equipment, are definite purpose motors, specifically designed and tested to operate reliably and continuously at all cataloged conditions. Using the full horsepower range of our fan motors as shown in our tabular data will not result in nuisance tripping or premature motor failure. Our product's warranty will not be affected.

(a) Unit applications below 320 cfm/ton are only applicable to Constant Volume THD models without electric heat and YHD models equipped with modulating gas heat. See below for restrictions:
- Electric heaters on applications below 320 cfm/ton.
- Frostat and Crankcase heaters are required on applications below 320 cfm/ton.
- Multi-speed, single zone VAV or multi-zone VAV applications are capable of running below 320 cfm/ton during low speed airflow operation, but "full" airflow must be set to 320 cfm/ton or higher.

(b) Fan Sheave BK110X1 3/16 and 1VP50X7/8 Required.
(c) Fan Sheave BK110X1 3/16 and 1VP56X7/8 Required.

Table 66. Evaporator fan performance—12½ tons—THD150G—dehumidification (hot gas reheat) option

	External Static Pressure (Inches of Water)																			
	0.10		0.20		0.30		0.40		0.50		0.60		0.70		0.80		0.90		1.00	
cfm	rpm	bhp	rpm	bhp	rpm	bhp	rpm	bhp	rpm	bhp	rpm	bhp	rpm	bhp	rpm	bhp	rpm	bhp	rpm	bhp
	3-hp Standard Motor & Low Static Drive Accessory									3-hp Standard Motor & Drive										
2500[a]	—	—	—	—	369	0.32	416	0.42	458	0.52	496	0.63	530	0.74	561	0.85	591	0.97	618	1.09
3000[a]	—	—	—	—	383	0.41	429	0.52	470	0.64	508	0.76	543	0.88	575	1.01	606	1.13	634	1.26
3500[a]	—	—	358	0.42	403	0.53	444	0.64	484	0.77	520	0.90	554	1.04	587	1.18	618	1.32	647	1.47
4000	—	—	386	0.57	424	0.67	464	0.80	500	0.93	535	1.07	569	1.21	600	1.36	629	1.52	658	1.69
4500	375	0.62	415	0.75	450	0.86	484	0.99	519	1.13	552	1.28	583	1.42	615	1.58	644	1.75	671	1.92
5000	407	0.82	446	0.97	479	1.09	510	1.22	540	1.37	572	1.53	602	1.69	630	1.84	658	2.01	686	2.20
5500	440	1.06	477	1.22	508	1.37	537	1.50	565	1.65	592	1.81	621	1.99	650	2.16	676	2.34	701	2.51
6000	471	1.34	508	1.52	538	1.69	566	1.84	592	1.99	617	2.15	643	2.32	669	2.51	695	2.71	721	2.90
													3-hp Standard Motor & High Static Drive Accessory[b]							

Continued

	External Static Pressure (Inches of Water)																			
	1.10		1.20		1.30		1.40		1.50		1.60		1.70		1.80		1.90		2.00	
cfm	rpm	bhp	rpm	bhp	rpm	bhp	rpm	bhp	rpm	bhp	rpm	bhp	rpm	bhp	rpm	bhp	rpm	bhp	rpm	bhp
	3-hp Standard Motor & High Static Drive Accessory[b]										3-hp Standard Motor & High Static Drive Accessory[c]									
2500[a]	645	1.22	670	1.35	694	1.48	718	1.61	740	1.75	762	1.88	783	2.02	803	2.17	823	2.31	843	2.46
3000[a]	660	1.40	686	1.54	710	1.69	733	1.83	755	1.98	777	2.13	798	2.28	819	2.44	839	2.60	858	2.76
3500[a]	674	1.61	700	1.76	725	1.91	749	2.07	771	2.23	793	2.39	814	2.56	834	2.73	854	2.90	873	3.07
4000	686	1.85	712	2.02	737	2.18	762	2.35	785	2.51	808	2.68	830	2.86	850	3.04	870	3.22	889	3.41
4500	698	2.10	724	2.28	749	2.47	773	2.65	797	2.84	820	3.02	842	3.21	863	3.39	884	3.58	904	3.77
5000	712	2.38	737	2.57	762	2.76	785	2.97	809	3.17	831	3.38	853	3.58	875	3.79	895	3.99	916	4.20
5500	727	2.70	753	2.90	776	3.10	799	3.31	822	3.52	844	3.74	865	3.96	886	4.19	907	4.42	927	4.64
6000	744	3.09	767	3.28	791	3.49	815	3.71	837	3.92	858	4.15	879	4.37	899	4.60	919	4.84	939	5.08
					5-hp Oversized Motor & Drive															

Notes:

1. For Standard Evaporator Fan Speed (rpm), reference Table 86, p. 119.
2. For High Evaporator Fan Speed (rpm), reference Table 87, p. 119.
3. For Oversized Evaporator Fan Speed (rpm), reference Table 88, p. 120.
4. Fan motor heat (MBh) = 3.15 x Fan bhp.
5. Data includes pressure drop due to standard filters and wet coils. No accessories or options are included in pressure drop data.
6. For all non-standard sheave combinations, please refer to accessory installer's guides ACC-SVN34*-EN and ACC-SVN72*-EN.
7. Factory supplied motors, in commercial equipment, are definite purpose motors, specifically designed and tested to operate reliably and continuously at all cataloged conditions. Using the full horsepower range of our fan motors as shown in our tabular data will not result in nuisance tripping or premature motor failure. Our product's warranty will not be affected.

(a) Unit applications below 320 cfm/ton are only applicable to Constant Volume THD models without electric heat and YHD models equipped with modulating gas heat. See below for restrictions:
- Electric heaters on applications below 320 cfm/ton.
- Frostat and Crankcase heaters are required on applications below 320 cfm/ton.
- Multi-speed, single zone VAV or multi-zone VAV applications are capable of running below 320 cfm/ton during low speed airflow operation, but "full" airflow must be set to 320 cfm/ton or higher.

(b) Fan Sheave BK110X1 3/16 and 1VP50X7/8 Required.

(c) Fan Sheave BK110X1 3/16 and 1VP56X7/8 Required.

Table 67. Evaporator fan performance—12½ tons—YH*150G

	External Static Pressure (Inches of Water)																			
	0.10		0.20		0.30		0.40		0.50		0.60		0.70		0.80		0.90		1.00	
cfm	rpm	bhp	rpm	bhp	rpm	bhp	rpm	bhp	rpm	bhp	rpm	bhp	rpm	bhp	rpm	bhp	rpm	bhp	rpm	bhp
	3-hp Standard Motor & Low Static Drive Accessory								3-hp Standard Motor & Drive											
2500[a]	263	0.15	322	0.23	375	0.33	421	0.44	463	0.56	501	0.68	536	0.80	568	0.92	599	1.04	627	1.16
3000[a]	292	0.23	344	0.33	393	0.43	436	0.55	477	0.69	515	0.82	549	0.96	582	1.10	612	1.23	640	1.36
3500[a]	324	0.35	369	0.45	413	0.57	455	0.71	494	0.84	529	0.99	563	1.14	595	1.29	626	1.43	655	1.57
4000	358	0.51	398	0.62	437	0.75	475	0.89	512	1.03	547	1.18	579	1.33	609	1.48	639	1.63	668	1.78
4500	392	0.71	429	0.84	464	0.97	499	1.11	532	1.25	566	1.41	597	1.55	627	1.70	655	1.85	682	2.00
5000	427	0.95	462	1.09	493	1.22	525	1.36	556	1.51	587	1.66	617	1.80	645	1.95	673	2.10	700	2.25
5500	462	1.23	496	1.38	525	1.51	553	1.64	582	1.79	610	1.93	638	2.08	666	2.23	692	2.38	718	2.54
6000	497	1.53	530	1.69	558	1.83	584	1.96	610	2.09	636	2.24	662	2.39	688	2.56	713	2.73	738	2.92
											3-hp Standard Motor & High Static Drive Accessory[b]									

Continued

	External Static Pressure (Inches of Water)																			
	1.10		1.20		1.30		1.40		1.50		1.60		1.70		1.80		1.90		2.00	
cfm	rpm	bhp	rpm	bhp	rpm	bhp	rpm	bhp	rpm	bhp	rpm	bhp	rpm	bhp	rpm	bhp	rpm	bhp	rpm	bhp
	3-hp Standard Motor & High Static Drive Accessory[b]												3-hp Standard Motor & High Static Drive Accessory[c]							
2500[a]	655	1.28	681	1.40	706	1.51	730	1.63	754	1.74	776	1.85	798	1.96	820	2.07	839	2.17	860	2.28
3000[a]	668	1.49	694	1.62	719	1.74	743	1.87	766	1.98	790	2.11	811	2.22	833	2.35	852	2.46	873	2.59
3500[a]	681	1.71	708	1.85	732	1.97	756	2.10	780	2.24	803	2.37	824	2.50	846	2.65	866	2.79	887	2.96
4000	695	1.93	721	2.07	746	2.22	770	2.36	794	2.50	816	2.66	838	2.82	859	3.00	879	3.20	899	3.44
4500	708	2.15	735	2.31	760	2.47	784	2.63	807	2.81	830	3.01	852	3.24	873	3.50	893	3.79	913	4.18
5000	725	2.41	750	2.57	773	2.75	798	2.97	821	3.20	843	3.47	865	3.81	887	4.22	907	4.71	926	5.27
5500	744	2.73	767	2.92	790	3.14	813	3.41	836	3.75	857	4.16	878	4.65	900	5.31	920	6.07	940	7.01
6000	761	3.14	786	3.42	809	3.74	831	4.15	852	4.64	873	5.25	894	6.07	913	6.97	934	8.19	954	9.61
					5-hp Oversized Motor & Drive															

Notes:
1. For Standard Evaporator Fan Speed (rpm), reference Table 86, p. 119.
2. For High Evaporator Fan Speed (rpm), reference Table 87, p. 119.
3. For Oversized Evaporator Fan Speed (rpm), reference Table 88, p. 120.
4. Fan motor heat (MBh) = 3.15 x Fan bhp.
5. Data includes pressure drop due to standard filters and wet coils. No accessories or options are included in pressure drop data.
6. For all non-standard sheave combinations, please refer to accessory installer's guides ACC-SVN34*-EN and ACC-SVN72*-EN.
7. Refer to Table 89, p. 120 to determine additional static pressure drop due to other options/accessories.
8. Factory supplied motors, in commercial equipment, are definite purpose motors, specifically designed and tested to operate reliably and continuously at all cataloged conditions. Using the full horsepower range of our fan motors as shown in our tabular data will not result in nuisance tripping or premature motor failure. Our product's warranty will not be affected.

(a) Unit applications below 320 cfm/ton are only applicable to Constant Volume THD models without electric heat and YHD models equipped with modulating gas heat. See below for restrictions:
- Electric heaters on applications below 320 cfm/ton.
- Frostat and Crankcase heaters are required on applications below 320 cfm/ton.
- Multi-speed, single zone VAV or multi-zone VAV applications are capable of running below 320 cfm/ton during low speed airflow operation, but "full" airflow must be set to 320 cfm/ton or higher.

(b) Fan Sheave BK110X1 3/16 and 1VP50X7/8 Required.
(c) Fan Sheave BK110X1 3/16 and 1VP56X7/8 Required.

Table 68. Evaporator fan performance—12½ tons—YHD150G—dehumidification (hot gas reheat) option

	External Static Pressure (Inches of Water)																			
	0.10		0.20		0.30		0.40		0.50		0.60		0.70		0.80		0.90		1.00	
cfm	rpm	bhp	rpm	bhp	rpm	bhp	rpm	bhp	rpm	bhp	rpm	bhp	rpm	bhp	rpm	bhp	rpm	bhp	rpm	bhp
	3-hp Standard Motor & Low Static Drive Accessory								3-hp Standard Motor & Drive											
2500[a]	—	—	—	—	374	0.33	420	0.43	462	0.54	500	0.64	534	0.75	565	0.87	594	0.99	621	1.11
3000[a]	—	—	—	—	391	0.43	436	0.54	476	0.65	513	0.78	548	0.90	580	1.03	610	1.15	638	1.29
3500[a]	—	—	368	0.44	412	0.55	453	0.67	492	0.79	528	0.93	561	1.07	593	1.21	624	1.36	653	1.50
4000	356	0.49	397	0.60	435	0.71	474	0.84	509	0.96	545	1.11	577	1.25	608	1.41	638	1.57	666	1.74
4500	390	0.67	428	0.79	462	0.90	496	1.04	531	1.18	563	1.33	594	1.48	625	1.64	653	1.81	681	1.98
5000	425	0.89	460	1.02	492	1.15	522	1.28	554	1.43	585	1.60	614	1.76	642	1.91	671	2.09	698	2.27
5500	460	1.15	493	1.30	523	1.44	552	1.58	579	1.73	607	1.90	636	2.08	664	2.26	689	2.43	714	2.61
6000	495	1.45	527	1.63	555	1.78	582	1.93	608	2.09	633	2.25	659	2.44	685	2.64	711	2.83	736	3.02
	3-hp Standard Motor & Drive										3-hp Standard Motor & High Static Drive Accessory[b]									

Continued

	External Static Pressure (Inches of Water)																			
	1.10		1.20		1.30		1.40		1.50		1.60		1.70		1.80		1.90		2.00	
cfm	rpm	bhp	rpm	bhp	rpm	bhp	rpm	bhp	rpm	bhp	rpm	bhp	rpm	bhp	rpm	bhp	rpm	bhp	rpm	bhp
	3-hp Standard Motor & High Static Drive Accessory[b]										3-hp Standard Motor & High Static Drive Accessory[c]									
2500[a]	648	1.23	673	1.36	697	1.49	720	1.62	742	1.76	764	1.90	785	2.04	806	2.18	825	2.33	845	2.47
3000[a]	664	1.42	689	1.56	713	1.71	737	1.86	759	2.00	781	2.15	802	2.31	822	2.46	842	2.62	861	2.78
3500[a]	680	1.64	706	1.79	730	1.94	754	2.10	776	2.27	797	2.43	818	2.60	839	2.77	858	2.94	878	3.11
4000	693	1.90	719	2.06	744	2.23	768	2.39	792	2.56	814	2.73	835	2.91	855	3.09	875	3.27	894	3.46
4500	707	2.16	733	2.35	758	2.53	782	2.72	805	2.90	827	3.09	849	3.27	870	3.46	891	3.65	911	3.84
5000	723	2.46	748	2.65	772	2.85	795	3.05	818	3.26	841	3.47	862	3.67	884	3.88	904	4.08	924	4.28
5500	741	2.81	765	3.01	788	3.21	811	3.42	833	3.63	855	3.85	876	4.08	897	4.31	917	4.53	937	4.76
6000	758	3.21	782	3.41	806	3.62	829	3.84	850	4.06	871	4.28	892	4.51	912	4.75	932	4.99	951	5.24
					5-hp Oversized Motor & Drive															

Notes:
1. For Standard Evaporator Fan Speed (rpm), reference Table 86, p. 119.
2. For High Evaporator Fan Speed (rpm), reference Table 87, p. 119.
3. For Oversized Evaporator Fan Speed (rpm), reference Table 88, p. 120.
4. Fan motor heat (MBh) = 3.15 x Fan bhp.
5. Data includes pressure drop due to standard filters and wet coils. No accessories or options are included in pressure drop data.
6. For all non-standard sheave combinations, please refer to accessory installer's guides ACC-SVN34*-EN and ACC-SVN72*-EN.
7. Refer to Table 89, p. 120 to determine additional static pressure drop due to other options/accessories.
8. Factory supplied motors, in commercial equipment, are definite purpose motors, specifically designed and tested to operate reliably and continuously at all cataloged conditions. Using the full horsepower range of our fan motors as shown in our tabular data will not result in nuisance tripping or premature motor failure. Our product's warranty will not be affected.

(a) Unit applications below 320 cfm/ton are only applicable to Constant Volume THD models without electric heat and YHD models equipped with modulating gas heat. See below for restrictions:
- Electric heaters on applications below 320 cfm/ton.
- Frostat and Crankcase heaters are required on applications below 320 cfm/ton.
- Multi-speed, single zone VAV or multi-zone VAV applications are capable of running below 320 cfm/ton during low speed airflow operation, but "full" airflow must be set to 320 cfm/ton or higher.

(b) Fan Sheave BK110X1 3/16 and 1VP50X7/8 Required.
(c) Fan Sheave BK110X1 3/16 and 1VP56X7/8 Required.

Table 69. Evaporator fan performance—15 tons—TH*180G

	External Static Pressure (Inches of Water)																			
	0.10		0.20		0.30		0.40		0.50		0.60		0.70		0.80		0.90		1.00	
cfm	rpm	bhp	rpm	bhp	rpm	bhp	rpm	bhp	rpm	bhp	rpm	bhp	rpm	bhp	rpm	bhp	rpm	bhp	rpm	bhp
	3-hp Standard Motor & Low Static Drive Accessory										3-hp Standard Motor & Drive									
3000[a]	-	-	-	-	369	0.38	411	0.47	448	0.57	483	0.68	514	0.78	543	0.89	570	1.00	596	1.11
3600[a]	-	-	-	-	391	0.50	429	0.61	465	0.72	499	0.84	530	0.96	560	1.08	587	1.21	614	1.33
4200[a]	-	-	378	0.55	416	0.66	451	0.78	485	0.90	516	1.03	547	1.16	575	1.30	603	1.44	629	1.58
4800	370	0.62	408	0.74	443	0.87	476	0.99	507	1.12	537	1.26	565	1.40	593	1.55	619	1.71	645	1.86
5400	405	0.84	439	0.97	472	1.11	502	1.25	532	1.39	560	1.54	587	1.69	613	1.85	638	2.01	662	2.18
6000	440	1.11	472	1.25	502	1.40	531	1.56	558	1.72	584	1.87	610	2.03	635	2.20	659	2.37	682	2.54
6600	476	1.43	505	1.58	533	1.74	560	1.92	586	2.09	611	2.26	635	2.44	659	2.61	682	2.79	704	2.97
7200	512	1.81	539	1.98	565	2.15	590	2.33	615	2.52	639	2.71	661	2.90	683	3.08	706	3.28	727	3.47
											3-hp Standard Motor & High Static Drive Accessory[b]								5-hp Oversized Motor & Drive	

Continued

	External Static Pressure (Inches of Water)																			
	1.10		1.20		1.30		1.40		1.50		1.60		1.70		1.80		1.90		2.00	
cfm	rpm	bhp	rpm	bhp	rpm	bhp	rpm	bhp	rpm	bhp	rpm	bhp	rpm	bhp	rpm	bhp	rpm	bhp	rpm	bhp
	3-hp Standard Motor & High Static Drive Accessory[b]												3HP Standard Motor & High Static Drive Accessory[c]							
3000[a]	620	1.23	643	1.35	664	1.47	684	1.59	703	1.72	722	1.86	740	1.99	757	2.13	775	2.27	791	2.41
3600[a]	638	1.46	662	1.59	684	1.73	705	1.86	726	2.00	746	2.14	765	2.28	784	2.42	801	2.57	817	2.72
4200[a]	654	1.73	678	1.87	701	2.02	723	2.17	744	2.32	764	2.47	784	2.62	802	2.78	821	2.94	839	3.10
4800	670	2.02	693	2.18	716	2.34	738	2.51	760	2.67	780	2.84	800	3.01	820	3.18	838	3.35	856	3.52
5400	686	2.35	709	2.52	732	2.70	753	2.88	775	3.06	795	3.24	815	3.42	835	3.61	854	3.80	872	3.98
6000	705	2.73	727	2.91	749	3.10	770	3.29	790	3.48	810	3.68	830	3.88	850	4.08	869	4.28	887	4.48
6600	725	3.16	747	3.35	767	3.55	788	3.75	808	3.96	827	4.17	846	4.37	865	4.59	884	4.80	902	5.02
7200	748	3.66	768	3.86	788	4.07	808	4.28	827	4.49	846	4.71	864	4.93	883	5.15	900	5.38	918	5.61
				5-hp Oversized Motor & Drive																

Notes:
1. For Standard Evaporator Fan Speed (rpm), reference Table 86, p. 119.
2. For High Evaporator Fan Speed (rpm), reference Table 87, p. 119.
3. For Oversized Evaporator Fan Speed (rpm), reference Table 88, p. 120.
4. Fan motor heat (MBh) = 3.15 x Fan bhp.
5. Data includes pressure drop due to standard filters and wet coils. No accessories or options are included in pressure drop data.
6. For all non-standard sheave combinations, please refer to accessory installer's guides ACC-SVN34*-EN and ACC-SVN72*-EN.
7. Factory supplied motors, in commercial equipment, are definite purpose motors, specifically designed and tested to operate reliably and continuously at all cataloged conditions. Using the full horsepower range of our fan motors as shown in our tabular data will not result in nuisance tripping or premature motor failure. Our product's warranty will not be affected.

(a) Unit applications below 320 cfm/ton are only applicable to Constant Volume THD models without electric heat and YHD models equipped with modulating gas heat. See below for restrictions:
- Electric heaters on applications below 320 cfm/ton.
- Frostat and Crankcase heaters are required on applications below 320 cfm/ton.
- Multi-speed, single zone VAV or multi-zone VAV applications are capable of running below 320 cfm/ton during low speed airflow operation, but "full" airflow must be set to 320 cfm/ton or higher.

(b) Fan Sheave BK110X1 3/16 and 1VP50X7/8 Required.
(c) Fan Sheave BK110X1 3/16 and 1VP56X7/8 Required.

Table 70. Evaporator fan performance—15 tons—THD180G—dehumidification (hot gas reheat) option

	External Static Pressure (Inches of Water)																			
	0.10		0.20		0.30		0.40		0.50		0.60		0.70		0.80		0.90		1.00	
cfm	rpm	bhp	rpm	bhp	rpm	bhp	rpm	bhp	rpm	bhp	rpm	bhp	rpm	bhp	rpm	bhp	rpm	bhp	rpm	bhp
	3-hp Standard Motor & Low Static Drive Accessory										3-hp Standard Motor & Drive									
3000[a]	—	—	—	—	—	—	387	0.49	424	0.61	458	0.72	489	0.84	516	0.96	541	1.08	565	1.20
3600[a]	—	—	—	—	367	0.51	407	0.63	441	0.76	472	0.89	502	1.02	532	1.16	559	1.30	584	1.44
4200[a]	—	—	354	0.54	391	0.67	426	0.80	460	0.94	492	1.08	520	1.23	546	1.38	572	1.54	598	1.70
4800	—	—	383	0.73	418	0.86	449	1.01	480	1.15	510	1.31	540	1.48	567	1.65	591	1.81	614	1.98
5400	371	0.82	412	0.97	446	1.11	476	1.26	504	1.43	531	1.59	558	1.76	585	1.94	611	2.13	635	2.32
6000	403	1.08	441	1.25	475	1.41	504	1.57	530	1.74	555	1.93	580	2.11	604	2.29	629	2.48	653	2.69
6600	435	1.39	472	1.59	504	1.78	532	1.94	558	2.12	582	2.31	605	2.51	628	2.71	650	2.91	672	3.11
7200	467	1.75	502	1.98	533	2.19	561	2.38	587	2.56	610	2.76	632	2.97	653	3.19	674	3.41	694	3.62
	3-hp Standard Motor & High Static Drive Accessory[b]														5-hp Oversized Motor & Drive					

Continued

	External Static Pressure (Inches of Water)																			
	1.10		1.20		1.30		1.40		1.50		1.60		1.70		1.80		1.90		2.00	
cfm	rpm	bhp	rpm	bhp	rpm	bhp	rpm	bhp	rpm	bhp	rpm	bhp	rpm	bhp	rpm	bhp	rpm	bhp	rpm	bhp
	3-hp Standard Motor & Drive				3-hp Standard Motor & High Static Drive Accessory[b]														3-hp Standard Motor & High Static Drive Accessory[c]	
3000[a]	587	1.32	609	1.44	629	1.57	649	1.70	668	1.83	687	1.97	705	2.11	723	2.25	740	2.39	758	2.54
3600[a]	608	1.58	629	1.72	650	1.87	670	2.01	689	2.16	708	2.30	725	2.45	743	2.61	760	2.76	776	2.92
4200[a]	623	1.86	647	2.03	669	2.19	690	2.36	709	2.52	728	2.68	746	2.85	764	3.01	781	3.18	797	3.35
4800	636	2.16	659	2.34	682	2.52	704	2.71	726	2.90	746	3.09	765	3.28	783	3.46	801	3.65	817	3.83
5400	656	2.51	677	2.70	698	2.89	717	3.09	738	3.29	758	3.50	778	3.71	798	3.92	817	4.13	835	4.34
6000	676	2.90	698	3.11	718	3.32	737	3.53	756	3.74	774	3.95	792	4.17	810	4.40	829	4.63	847	4.86
6600	694	3.33	716	3.56	737	3.79	758	4.02	777	4.25	795	4.48	812	4.71	829	4.94	846	5.18	862	5.42
7200	715	3.84	735	4.06	755	4.30	775	4.55	795	4.80	814	5.05	833	5.31	849.90	5.56	—	—	—	—
	5-hp Oversized Motor & Drive																			

Notes:
1. For Standard Evaporator Fan Speed (rpm), reference Table 86, p. 119.
2. For High Evaporator Fan Speed (rpm), reference Table 87, p. 119.
3. For Oversized Evaporator Fan Speed (rpm), reference Table 88, p. 120.
4. Fan motor heat (MBh) = 3.15 x Fan bhp.
5. Data includes pressure drop due to standard filters and wet coils. No accessories or options are included in pressure drop data.
6. For all non-standard sheave combinations, please refer to accessory installer's guides ACC-SVN34*-EN and ACC-SVN72*-EN.
7. Factory supplied motors, in commercial equipment, are definite purpose motors, specifically designed and tested to operate reliably and continuously at all cataloged conditions. Using the full horsepower range of our fan motors as shown in our tabular data will not result in nuisance tripping or premature motor failure. Our product's warranty will not be affected.

(a) Unit applications below 320 cfm/ton are only applicable to Constant Volume THD models without electric heat and YHD models equipped with modulating gas heat. See below for restrictions:
- Electric heaters on applications below 320 cfm/ton.
- Frostat and Crankcase heaters are required on applications below 320 cfm/ton.
- Multi-speed, single zone VAV or multi-zone VAV applications are capable of running below 320 cfm/ton during low speed airflow operation, but "full" airflow must be set to 320 cfm/ton or higher.

(b) Fan Sheave BK110X1 3/16 and 1VP50X7/8 Required.
(c) Fan Sheave BK110X1 3/16 and 1VP56X7/8 Required.

Table 71. Evaporator fan performance—15 tons—YH*180G

	External Static Pressure (Inches of Water)																			
	0.10		0.20		0.30		0.40		0.50		0.60		0.70		0.80		0.90		1.00	
cfm	rpm	bhp	rpm	bhp	rpm	bhp	rpm	bhp	rpm	bhp	rpm	bhp	rpm	bhp	rpm	bhp	rpm	bhp	rpm	bhp
	3-hp Standard Motor & Low Static Drive Accessory								3-hp Standard Motor & Drive											
3000[a]	-	-	-	-	376	0.39	417	0.49	454	0.59	488	0.69	519	0.80	547	0.91	574	1.02	600	1.13
3600[a]	-	-	359	0.42	400	0.52	438	0.63	473	0.75	506	0.87	537	0.99	566	1.11	594	1.24	619	1.36
4200[a]	-	-	390	0.59	427	0.70	462	0.81	495	0.94	526	1.07	555	1.21	584	1.34	611	1.48	637	1.63
4800	386	0.66	422	0.79	456	0.92	489	1.04	519	1.18	548	1.32	577	1.46	604	1.61	630	1.77	655	1.92
5400	422	0.90	456	1.04	487	1.18	517	1.32	546	1.47	574	1.62	600	1.77	626	1.93	651	2.09	675	2.26
6000	460	1.19	491	1.34	520	1.50	548	1.66	574	1.81	601	1.97	626	2.14	650	2.30	673	2.48	696	2.66
6600	498	1.54	526	1.70	554	1.87	580	2.05	605	2.22	629	2.39	653	2.57	676	2.75	699	2.93	720	3.11
7200	536	1.96	562	2.13	588	2.31	613	2.50	636	2.69	659	2.88	681	3.07	703	3.26	725	3.45	746	3.65
									3-hp Standard Motor & High Static Drive Accessory[b]										5-hp Oversized Motor & Drive	

Continued

	External Static Pressure (Inches of Water)																			
	1.10		1.20		1.30		1.40		1.50		1.60		1.70		1.80		1.90		2.00	
cfm	rpm	bhp	rpm	bhp	rpm	bhp	rpm	bhp	rpm	bhp	rpm	bhp	rpm	bhp	rpm	bhp	rpm	bhp	rpm	bhp
	3-hp Standard Motor & High Static Drive Accessory[b]												3HP Standard Motor & High Static Drive Accessory[c]							
3000[a]	624	1.25	646	1.36	667	1.49	687	1.62	706	1.74	725	1.88	743	2.01	760	2.15	777	2.29	794	2.43
3600[a]	643	1.49	667	1.62	689	1.76	710	1.89	731	2.03	750	2.17	769	2.31	788	2.45	804	2.60	821	2.76
4200[a]	662	1.77	685	1.92	708	2.07	729	2.21	750	2.37	770	2.52	789	2.67	808	2.83	826	2.99	844	3.14
4800	679	2.08	703	2.24	725	2.41	747	2.57	768	2.74	789	2.91	808	3.08	827	3.25	845	3.42	863	3.59
5400	698	2.44	721	2.61	743	2.79	764	2.97	785	3.15	806	3.33	825	3.52	845	3.70	863	3.89	881	4.08
6000	719	2.84	741	3.03	762	3.22	783	3.41	803	3.61	823	3.80	842	4.00	862	4.20	880	4.40	898	4.61
6600	742	3.30	763	3.50	783	3.70	803	3.91	823	4.11	842	4.32	861	4.54	879	4.75	897	4.97	915	5.19
7200	766	3.84	786	4.05	806	4.26	825	4.47	844	4.68	863	4.91	881	5.13	899	5.36	916	5.58	-	-
	5-hp Oversized Motor & Drive																			

Notes:
1. For Standard Evaporator Fan Speed (rpm), reference Table 86, p. 119.
2. For High Evaporator Fan Speed (rpm), reference Table 87, p. 119.
3. For Oversized Evaporator Fan Speed (rpm), reference Table 88, p. 120.
4. Fan motor heat (MBh) = 3.15 x Fan bhp.
5. Data includes pressure drop due to standard filters and wet coils. No accessories or options are included in pressure drop data.
6. For all non-standard sheave combinations, please refer to accessory installer's guides ACC-SVN34*-EN and ACC-SVN72*-EN.
7. Factory supplied motors, in commercial equipment, are definite purpose motors, specifically designed and tested to operate reliably and continuously at all cataloged conditions. Using the full horsepower range of our fan motors as shown in our tabular data will not result in nuisance tripping or premature motor failure. Our product's warranty will not be affected.

(a) Unit applications below 320 cfm/ton are only applicable to Constant Volume THD models without electric heat and YHD models equipped with modulating gas heat. See below for restrictions:
- Electric heaters on applications below 320 cfm/ton.
- Frostat and Crankcase heaters are required on applications below 320 cfm/ton.
- Multi-speed, single zone VAV or multi-zone VAV applications are capable of running below 320 cfm/ton during low speed airflow operation, but "full" airflow must be set to 320 cfm/ton or higher.

(b) Fan Sheave BK110X1 3/16 and 1VP50X7/8 Required.
(c) Fan Sheave BK110X1 3/16 and 1VP56X7/8 Required.

Table 72. Evaporator fan performance—15 tons—YHD180G—dehumidification (hot gas reheat) option

	External Static Pressure (Inches of Water)																			
	0.10		0.20		0.30		0.40		0.50		0.60		0.70		0.80		0.90		1.00	
cfm	rpm	bhp	rpm	bhp	rpm	bhp	rpm	bhp	rpm	bhp	rpm	bhp	rpm	bhp	rpm	bhp	rpm	bhp	rpm	bhp
	3-hp Standard Motor & Low Static Drive Accessory										3-hp Standard Motor & Drive									
3000[a]	—	—	—	—	355	0.40	393	0.51	429	0.63	463	0.74	493	0.86	520	0.98	545	1.10	568	1.22
3600[a]	—	—	—	—	377	0.53	415	0.66	448	0.79	478	0.91	509	1.05	538	1.19	565	1.33	590	1.47
4200[a]	—	—	366	0.58	402	0.71	436	0.84	470	0.98	501	1.13	528	1.28	554	1.43	580	1.59	606	1.75
4800	358	0.66	397	0.78	430	0.92	461	1.07	492	1.21	522	1.38	551	1.54	576	1.71	600	1.88	623	2.05
5400	393	0.90	430	1.04	461	1.19	490	1.35	517	1.51	545	1.67	572	1.85	598	2.04	623	2.23	646	2.41
6000	428	1.19	463	1.35	493	1.51	520	1.68	546	1.86	571	2.04	595	2.22	619	2.41	644	2.61	667	2.82
6600	463	1.54	496	1.73	525	1.90	552	2.07	576	2.26	599	2.46	622	2.66	644	2.86	666	3.06	688	3.27
7200	499	1.96	531	2.18	559	2.36	584	2.55	607	2.74	630	2.95	651	3.17	672	3.38	692	3.60	713	3.82
	3-hp Standard Motor & High Static Drive Accessory[b]															5-hp Oversized Motor & Drive				

Continued

	External Static Pressure (Inches of Water)																			
	1.10		1.20		1.30		1.40		1.50		1.60		1.70		1.80		1.90		2.00	
cfm	rpm	bhp	rpm	bhp	rpm	bhp	rpm	bhp	rpm	bhp	rpm	bhp	rpm	bhp	rpm	bhp	rpm	bhp	rpm	bhp
	3-hp Standard Motor & Drive				3-hp Standard Motor & High Static Drive Accessory[b]														3HP Standard Motor & High Static Drive Accessory[c]	
3000[a]	591	1.34	612	1.46	632	1.59	652	1.72	671	1.86	690	1.99	708	2.13	725	2.27	743	2.42	761	2.56
3600[a]	613	1.61	634	1.76	655	1.90	674	2.04	693	2.19	712	2.34	729	2.49	746	2.64	763	2.79	780	2.95
4200[a]	631	1.91	654	2.08	676	2.24	696	2.40	715	2.57	734	2.73	752	2.90	769	3.07	786	3.23	802	3.41
4800	645	2.23	668	2.41	691	2.60	713	2.79	734	2.98	754	3.16	772	3.35	790	3.54	807	3.72	824	3.91
5400	667	2.60	687	2.79	708	2.99	728	3.19	748	3.40	768	3.60	788	3.81	807	4.03	826	4.24	844	4.45
6000	690	3.03	711	3.24	730	3.45	749	3.66	767	3.87	785	4.09	803	4.31	822	4.54	840	4.77	858	5.00
6600	711	3.50	732	3.73	753	3.96	772	4.20	790	4.42	808	4.66	825	4.88	841	5.12	858	5.36	874	5.60
7200	733	4.04	753	4.28	773	4.52	793	4.77	812	5.02	831	5.28	848.25	5.53	—	—	—	—	—	—
	5-hp Oversized Motor & Drive																			

Notes:
1. For Standard Evaporator Fan Speed (rpm), reference Table 86, p. 119.
2. For High Evaporator Fan Speed (rpm), reference Table 87, p. 119.
3. For Oversized Evaporator Fan Speed (rpm), reference Table 88, p. 120.
4. Fan motor heat (MBh) = 3.15 x Fan bhp.
5. Data includes pressure drop due to standard filters and wet coils. No accessories or options are included in pressure drop data.
6. For all non-standard sheave combinations, please refer to accessory installer's guides ACC-SVN34*-EN and ACC-SVN72*-EN.
7. Factory supplied motors, in commercial equipment, are definite purpose motors, specifically designed and tested to operate reliably and continuously at all cataloged conditions. Using the full horsepower range of our fan motors as shown in our tabular data will not result in nuisance tripping or premature motor failure. Our product's warranty will not be affected.

(a) Unit applications below 320 cfm/ton are only applicable to Constant Volume THD models without electric heat and YHD models equipped with modulating gas heat. See below for restrictions:
- Electric heaters on applications below 320 cfm/ton.
- Frostat and Crankcase heaters are required on applications below 320 cfm/ton.
- Multi-speed, single zone VAV or multi-zone VAV applications are capable of running below 320 cfm/ton during low speed airflow operation, but "full" airflow must be set to 320 cfm/ton or higher.

(b) Fan Sheave BK110X1 3/16 and 1VP50X7/8 Required.
(c) Fan Sheave BK110X1 3/16 and 1VP56X7/8 Required.

Table 73. Evaporator fan performance— 17½ tons — TH*210G

	External Static Pressure (Inches of Water)																			
	0.10		0.20		0.30		0.40		0.50		0.60		0.70		0.80		0.90		1.00	
cfm	rpm	bhp	rpm	bhp	rpm	bhp	rpm	bhp	rpm	bhp	rpm	bhp	rpm	bhp	rpm	bhp	rpm	bhp	rpm	bhp
	5-hp Standard Motor & Low Static Drive Accessory																			
3500[a]	—	—	—	—	—	—	—	—	—	—	470	0.86	501	1.00	531	1.13	558	1.27	582	1.41
4200[a]	—	—	—	—	—	—	—	—	462	0.94	494	1.09	521	1.24	547	1.39	573	1.54	599	1.71
4900[a]	—	—	—	—	—	—	455	1.06	485	1.20	515	1.36	544	1.53	572	1.70	596	1.88	619	2.05
5600	—	—	—	—	458	1.21	487	1.37	514	1.54	541	1.71	567	1.88	593	2.07	619	2.26	643	2.46
6300	—	—	459	1.43	492	1.60	520	1.76	546	1.94	570	2.13	594	2.32	618	2.51	641	2.70	664	2.91
7000	460	1.65	495	1.86	526	2.07	554	2.24	580	2.42	603	2.63	625	2.83	646	3.05	668	3.25	689	3.47
7700	498	2.13	531	2.38	562	2.62	589	2.82	614	3.02	637	3.22	658	3.44	678	3.66	698	3.90	717	4.13
8400	537	2.71	568	2.99	597	3.26	624	3.50	648	3.71	670	3.93	692	4.15	711	4.38	730	4.63	748	4.88
	5-hp Standard Motor & Drive										5-hp Standard Motor & High Static Drive Accessory									

Continued

	External Static Pressure (Inches of Water)																			
	1.10		1.20		1.30		1.40		1.50		1.60		1.70		1.80		1.90		2.00	
cfm	rpm	bhp	rpm	bhp	rpm	bhp	rpm	bhp	rpm	bhp	rpm	bhp	rpm	bhp	rpm	bhp	rpm	bhp	rpm	bhp
	5-hp Standard Motor & Drive										5-hp Standard Motor & High Static Drive Accessory									
3500[a]	605	1.54	627	1.68	648	1.82	667	1.96	686	2.11	705	2.25	723	2.40	740	2.55	757	2.70	773	2.86
4200[a]	624	1.87	648	2.04	670	2.20	691	2.36	710	2.53	729	2.69	747	2.86	765	3.03	782	3.19	798	3.36
4900[a]	641	2.22	663	2.41	686	2.59	708	2.79	729	2.98	750	3.17	769	3.36	788	3.55	805	3.74	822	3.93
5600	665	2.65	686	2.85	706	3.05	725	3.25	745	3.45	764	3.66	784	3.88	803	4.09	822	4.31	841	4.54
6300	687	3.13	709	3.35	730	3.57	750	3.79	768	4.01	786	4.23	804	4.46	821	4.69	838	4.92	856	5.15
7000	710	3.68	731	3.91	752	4.15	772	4.40	792	4.64	811	4.89	828	5.14	845	5.38	861	5.62	878	5.87
7700	737	4.36	756	4.59	775	4.83	794	5.07	813	5.33	832	5.60	850	5.87	868	6.14	886	6.41	902	6.68
8400	767	5.14	784	5.38	802	5.63	820	5.89	837	6.15	854	6.41	872	6.68	889	6.97	907	7.26	924	7.55
							7.5-hp Oversized Motor & Drive													

Notes:
1. For Standard Evaporator Fan Speed (rpm), reference Table 86, p. 119.
2. For High Evaporator Fan Speed (rpm), reference Table 87, p. 119.
3. For Oversized Evaporator Fan Speed (rpm), reference Table 88, p. 120.
4. Fan motor heat (MBh) = 3.15 x Fan bhp.
5. Data includes pressure drop due to standard filters and wet coils. No accessories or options are included in pressure drop data.
6. For all non-standard sheave combinations, please refer to accessory installer's guides ACC-SVN34*-EN and ACC-SVN72*-EN.
7. Factory supplied motors, in commercial equipment, are definite purpose motors, specifically designed and tested to operate reliably and continuously at all cataloged conditions. Using the full horsepower range of our fan motors as shown in our tabular data will not result in nuisance tripping or premature motor failure. Our product's warranty will not be affected.

(a) Unit applications below 320 cfm/ton are only applicable to Constant Volume THD models without electric heat and YHD models equipped with modulating gas heat. See below for restrictions:
- Electric heaters on applications below 320 cfm/ton.
- Frostat and Crankcase heaters are required on applications below 320 cfm/ton.
- Multi-speed, single zone VAV or multi-zone VAV applications are capable of running below 320 cfm/ton during low speed airflow operation, but "full" airflow must be set to 320 cfm/ton or higher.

Table 74. Evaporator fan performance — 17½ tons — THD210G — dehumidification (hot gas reheat) option

	External Static Pressure (Inches of Water)																			
	0.10		0.20		0.30		0.40		0.50		0.60		0.70		0.80		0.90		1.00	
cfm	rpm	bhp	rpm	bhp	rpm	bhp	rpm	bhp	rpm	bhp	rpm	bhp	rpm	bhp	rpm	bhp	rpm	bhp	rpm	bhp
											5HP Standard Motor & Low Static Drive Accessory				5HP Standard Motor & Drive					
3500[a]	—	—	—	—	—	—	—	—	—	—	470	0.86	501	1.00	531	1.13	558	1.27	582	1.41
4200[a]	—	—	—	—	—	—	—	—	462	0.94	494	1.09	521	1.24	547	1.39	573	1.54	599	1.71
4900[a]	—	—	—	—	—	—	455	1.06	485	1.20	515	1.36	544	1.53	572	1.70	596	1.88	619	2.05
5600	—	—	—	—	458	1.21	487	1.37	514	1.54	541	1.71	567	1.88	593	2.07	619	2.26	643	2.46
6300	—	—	459	1.43	492	1.60	520	1.76	546	1.94	570	2.13	594	2.32	618	2.51	641	2.70	664	2.91
7000	460	1.65	495	1.86	526	2.07	554	2.24	580	2.42	603	2.63	625	2.83	646	3.05	668	3.25	689	3.47
7700	498	2.13	531	2.38	562	2.62	589	2.82	614	3.02	637	3.22	658	3.44	678	3.66	698	3.90	717	4.13
8400	537	2.71	568	2.99	597	3.26	624	3.50	648	3.71	670	3.93	692	4.15	711	4.38	730	4.63	748	4.88
													5HP Standard Motor & High Static Drive Accessory							

Continued

	External Static Pressure (Inches of Water)																			
	1.10		1.20		1.30		1.40		1.50		1.60		1.70		1.80		1.90		2.00	
cfm	rpm	bhp	rpm	bhp	rpm	bhp	rpm	bhp	rpm	bhp	rpm	bhp	rpm	bhp	rpm	bhp	rpm	bhp	rpm	bhp
	5HP Standard Motor & Drive										5HP Standard Motor & High Static Drive Accessory									
3500[a]	605	1.54	627	1.68	648	1.82	667	1.96	686	2.11	705	2.25	723	2.40	740	2.55	757	2.70	773	2.86
4200[a]	624	1.87	648	2.04	670	2.20	691	2.36	710	2.53	729	2.69	747	2.86	765	3.03	782	3.19	798	3.36
4900[a]	641	2.22	663	2.41	686	2.59	708	2.79	729	2.98	750	3.17	769	3.36	788	3.55	805	3.74	822	3.93
5600	665	2.65	686	2.85	706	3.05	725	3.25	745	3.45	764	3.66	784	3.88	803	4.09	822	4.31	841	4.54
6300	687	3.13	709	3.35	730	3.57	750	3.79	768	4.01	786	4.23	804	4.46	821	4.69	838	4.92	856	5.15
7000	710	3.68	731	3.91	752	4.15	772	4.40	792	4.64	811	4.89	828	5.14	845	5.38	861	5.62	878	5.87
7700	737	4.36	756	4.59	775	4.83	794	5.07	813	5.33	832	5.60	850	5.87	868	6.14	886	6.41	902	6.68
8400	767	5.14	784	5.38	802	5.63	820	5.89	837	6.15	854	6.41	872	6.68	889	6.97	907	7.26	924	7.55
							7.5HP Oversized Motor & Drive													

Notes:
1. For Standard Evaporator Fan Speed (rpm), reference Table 86, p. 119.
2. For High Evaporator Fan Speed (rpm), reference Table 87, p. 119.
3. For Oversized Evaporator Fan Speed (rpm), reference Table 88, p. 120.
4. Fan motor heat (MBh) = 3.15 x Fan bhp.
5. Data includes pressure drop due to standard filters and wet coils. No accessories or options are included in pressure drop data.
6. For all non-standard sheave combinations, please refer to accessory installer's guides ACC-SVN34*-EN and ACC-SVN72*-EN.
7. Factory supplied motors, in commercial equipment, are definite purpose motors, specifically designed and tested to operate reliably and continuously at all cataloged conditions. Using the full horsepower range of our fan motors as shown in our tabular data will not result in nuisance tripping or premature motor failure. Our product's warranty will not be affected.

(a) Unit applications below 320 cfm/ton are only applicable to Constant Volume THD models without electric heat and YHD models equipped with modulating gas heat. See below for restrictions:
- Electric heaters on applications below 320 cfm/ton.
- Frostat and Crankcase heaters are required on applications below 320 cfm/ton.
- Multi-speed, single zone VAV or multi-zone VAV applications are capable of running below 320 cfm/ton during low speed airflow operation, but "full" airflow must be set to 320 cfm/ton or higher.

Table 75. Evaporator fan performance—17½ tons—YH*210G

	External Static Pressure (Inches of Water)																			
	0.10		0.20		0.30		0.40		0.50		0.60		0.70		0.80		0.90		1.00	
cfm	rpm	bhp	rpm	bhp	rpm	bhp	rpm	bhp	rpm	bhp	rpm	bhp	rpm	bhp	rpm	bhp	rpm	bhp	rpm	bhp
	5-hp Standard Motor & Low Static Drive Accessory												5-hp Standard Motor & Drive							
3500[a]	—	—	—	—	—	—	—	—	—	—	476	0.89	508	1.02	537	1.16	563	1.30	587	1.43
4200[a]	—	—	—	—	—	—	—	—	472	0.99	502	1.14	529	1.28	555	1.43	581	1.59	607	1.76
4900[a]	—	—	—	—	—	—	468	1.12	497	1.27	527	1.43	556	1.60	582	1.78	605	1.95	628	2.12
5600	—	—	—	—	474	1.29	501	1.46	528	1.63	555	1.80	581	1.98	607	2.17	632	2.37	655	2.56
6300	—	—	482	1.55	512	1.71	538	1.88	563	2.07	587	2.26	610	2.45	634	2.64	657	2.84	680	3.06
7000	490	1.84	522	2.04	550	2.22	576	2.39	599	2.59	621	2.80	643	3.01	665	3.22	686	3.43	707	3.65
7700	532	2.39	562	2.62	589	2.83	614	3.02	637	3.22	658	3.44	679	3.67	698	3.90	718	4.13	737	4.36
8400	574	3.03	603	3.30	629	3.55	653	3.76	675	3.97	696	4.20	715	4.43	734	4.68	752	4.93	770	5.18
											5-hp Standard Motor & High Static Drive Accessory									

Continued

	External Static Pressure (Inches of Water)																			
	1.10		1.20		1.30		1.40		1.50		1.60		1.70		1.80		1.90		2.00	
cfm	rpm	bhp	rpm	bhp	rpm	bhp	rpm	bhp	rpm	bhp	rpm	bhp	rpm	bhp	rpm	bhp	rpm	bhp	rpm	bhp
	5-hp Standard Motor & Drive										5-hp Standard Motor & High Static Drive Accessory									
3500[a]	610	1.57	631	1.71	652	1.85	672	1.99	690	2.14	709	2.28	726	2.43	744	2.58	760	2.73	777	2.89
4200[a]	632	1.92	655	2.09	677	2.25	697	2.41	716	2.58	735	2.74	753	2.91	770	3.08	787	3.24	803	3.42
4900[a]	650	2.30	673	2.48	695	2.67	717	2.86	738	3.06	758	3.25	777	3.44	795	3.63	812	3.82	829	4.01
5600	677	2.76	697	2.96	717	3.15	736	3.36	755	3.56	775	3.78	795	3.99	814	4.21	832	4.43	850	4.65
6300	702	3.28	724	3.50	744	3.72	762	3.94	781	4.17	798	4.39	816	4.61	833	4.84	850	5.08	868	5.32
7000	727	3.88	748	4.11	769	4.36	789	4.60	808	4.85	826	5.10	843	5.34	859	5.59	875	5.83	891	6.08
7700	756	4.59	775	4.83	794	5.08	813	5.34	832	5.60	851	5.87	869	6.15	886	6.41	903	6.69	918	6.96
8400	788	5.44	806	5.69	824	5.95	841	6.21	858	6.46	876	6.74	893	7.03	910	7.32	927	7.61	944	7.91
					7.5-hp Oversized Motor & Drive															

Notes:
1. For Standard Evaporator Fan Speed (rpm), reference Table 86, p. 119.
2. For High Evaporator Fan Speed (rpm), reference Table 87, p. 119.
3. For Oversized Evaporator Fan Speed (rpm), reference Table 88, p. 120.
4. Fan motor heat (MBh) = 3.15 x Fan bhp.
5. Data includes pressure drop due to standard filters and wet coils. No accessories or options are included in pressure drop data.
6. For all non-standard sheave combinations, please refer to accessory installer's guides ACC-SVN34*-EN and ACC-SVN72*-EN.
7. Refer to Table 89, p. 120 to determine additional static pressure drop due to other options/accessories.
8. Factory supplied motors, in commercial equipment, are definite purpose motors, specifically designed and tested to operate reliably and continuously at all cataloged conditions. Using the full horsepower range of our fan motors as shown in our tabular data will not result in nuisance tripping or premature motor failure. Our product's warranty will not be affected.

(a) Unit applications below 320 cfm/ton are only applicable to Constant Volume THD models without electric heat and YHD models equipped with modulating gas heat. See below for restrictions:
- Electric heaters on applications below 320 cfm/ton.
- Frostat and Crankcase heaters are required on applications below 320 cfm/ton.
- Multi-speed, single zone VAV or multi-zone VAV applications are capable of running below 320 cfm/ton during low speed airflow operation, but "full" airflow must be set to 320 cfm/ton or higher.

Table 76. Evaporator fan performance — 17½ tons — YHD210G — dehumidification (hot gas reheat) option

	External Static Pressure (Inches of Water)																			
	0.10		0.20		0.30		0.40		0.50		0.60		0.70		0.80		0.90		1.00	
cfm	rpm	bhp	rpm	bhp	rpm	bhp	rpm	bhp	rpm	bhp	rpm	bhp	rpm	bhp	rpm	bhp	rpm	bhp	rpm	bhp
					5HP Standard Motor & Low Static Drive Accessory				5HP Standard Motor & Drive											
5600	—	—	—	—	474	1.29	501	1.46	528	1.63	555	1.80	581	1.98	607	2.17	632	2.37	655	2.56
6300	—	—	482	1.55[a]	512	1.71	538	1.88	563	2.07	587	2.26	610	2.45	634	2.64	657	2.84	680	3.06
7000	490	1.84[a]	522	2.04	550	2.22	576	2.39	599	2.59	621	2.80	643	3.01	665	3.22	686	3.43	707	3.65
7700	532	2.39	562	2.62	589	2.83	614	3.02	637	3.22	658	3.44	679	3.67	698	3.90	718	4.13	737	4.36
8400	574	3.03	603	3.30	629	3.55	653	3.76	675	3.97	696	4.20	715	4.43	734	4.68	752	4.93	770	5.18
											5HP Standard Motor & High Static Drive Accessory									

Continued

	External Static Pressure (Inches of Water)																			
	1.10		1.20		1.30		1.40		1.50		1.60		1.70		1.80		1.90		2.00	
cfm	rpm	bhp	rpm	bhp	rpm	bhp	rpm	bhp	rpm	bhp	rpm	bhp	rpm	bhp	rpm	bhp	rpm	bhp	rpm	bhp
			5HP Standard Motor & High Static Drive Accessory																	
5600	677	2.76[b]	697	2.96	717	3.15	736	3.36	755	3.56	775	3.78	795	3.99	814	4.21	832	4.43	850	4.65
6300	702	3.28	724	3.50	744	3.72	762	3.94	781	4.17	798	4.39	816	4.61	833	4.84	850	5.08	868	5.32
7000	727	3.88	748	4.11	769	4.36	789	4.60	808	4.85	826	5.10	843	5.34	859	5.59	875	5.83	891	6.08
7700	756	4.59	775	4.83	794	5.08	813	5.34	832	5.60	851	5.87	869	6.15	886	6.41	903	6.69	918	6.96
8400	788	5.44	806	5.69	824	5.95	841	6.21	858	6.46	876	6.74	893	7.03	910	7.32	927	7.61	944	7.91
					7.5HP Oversized Motor & Drive															

Notes:
1. For Standard Evaporator Fan Speed (rpm), reference Table 86, p. 119.
2. For High Evaporator Fan Speed (rpm), reference Table 87, p. 119.
3. For Oversized Evaporator Fan Speed (rpm), reference Table 88, p. 120.
4. Fan motor heat (MBh) = 3.15 x Fan bhp.
5. Data includes pressure drop due to standard filters and wet coils. No accessories or options are included in pressure drop data.
6. For all non-standard sheave combinations, please refer to accessory installer's guides ACC-SVN34*-EN and ACC-SVN72*-EN.
7. Refer to Table 89, p. 120 to determine additional static pressure drop due to other options/accessories.
8. Factory supplied motors, in commercial equipment, are definite purpose motors, specifically designed and tested to operate reliably and continuously at all cataloged conditions. Using the full horsepower range of our fan motors as shown in our tabular data will not result in nuisance tripping or premature motor failure. Our product's warranty will not be affected.

(a) 5HP Standard Motor & Low Static Drive Accessory
(b) 5HP Standard Motor & Drive

Table 77. Evaporator fan performance—20 tons—TH*240G

	External Static Pressure (Inches of Water)																			
	0.10		0.20		0.30		0.40		0.50		0.60		0.70		0.80		0.90		1.00	
cfm	rpm	bhp	rpm	bhp	rpm	bhp	rpm	bhp	rpm	bhp	rpm	bhp	rpm	bhp	rpm	bhp	rpm	bhp	rpm	bhp
	5-hp Standard Motor & Low Static Drive Accessory												5-hp Standard Motor & Drive							
4000[a]	—	—	—	—	—	—	—	—	456	0.88	486	1.02	514	1.16	541	1.31	569	1.46	595	1.62
4800[a]	—	—	—	—	—	—	451	1.02	481	1.16	512	1.32	541	1.49	568	1.66	592	1.82	615	1.99
5600[a]	—	—	—	—	458	1.21	487	1.37	514	1.54	541	1.71	567	1.88	593	2.07	619	2.26	643	2.46
6400	—	—	464	1.49	497	1.66	525	1.82	551	2.00	575	2.20	598	2.39	622	2.58	645	2.78	667	2.98
7200	470	1.77	505	2.00	536	2.21	564	2.40	589	2.58	612	2.78	634	3.00	655	3.21	676	3.43	697	3.65
8000	514	2.37	547	2.63	577	2.87	603	3.10	628	3.30	651	3.51	672	3.73	692	3.96	711	4.20	730	4.44
8800	560	3.10	590	3.38	618	3.65	644	3.92	667	4.16	690	4.39	711	4.61	731	4.84	749	5.09	767	5.35
9600	606	3.97	633	4.27	660	4.59	685	4.88	708	5.15	729	5.42	750	5.66	769	5.91	788	6.16	805	6.42
	5-hp Standard Motor & High Static Drive Accessory										7.5-hp Oversized Motor & Field Supplied Motor Sheave[b]									

Continued

	External Static Pressure (Inches of Water)																			
	1.10		1.20		1.30		1.40		1.50		1.60		1.70		1.80		1.90		2.00	
cfm	rpm	bhp	rpm	bhp	rpm	bhp	rpm	bhp	rpm	bhp	rpm	bhp	rpm	bhp	rpm	bhp	rpm	bhp	rpm	bhp
	5-hp Standard Motor & Drive										5-hp Standard Motor & High Static Drive Accessory									
4000[a]	620	1.78	643	1.93	664	2.09	685	2.25	704	2.40	722	2.56	740	2.72	758	2.88	775	3.05	791	3.21
4800[a]	638	2.17	661	2.35	684	2.54	706	2.72	727	2.91	747	3.10	767	3.29	785	3.48	802	3.66	819	3.85
5600[a]	665	2.65	686	2.85	706	3.05	725	3.25	745	3.45	764	3.66	784	3.88	803	4.09	822	4.31	841	4.54
6400	690	3.20	712	3.43	733	3.65	753	3.88	772	4.10	790	4.32	807	4.55	824	4.78	841	5.01	858	5.25
7200	717	3.86	737	4.09	758	4.33	778	4.58	798	4.83	817	5.08	835	5.34	852	5.59	868	5.84	885	6.10
8000	749	4.68	768	4.92	786	5.16	804	5.41	823	5.66	841	5.93	859	6.20	877	6.48	895	6.76	912	7.04
8800	784	5.61	802	5.89[b]	819	6.15	836	6.41	853	6.67	869	6.95	886	7.21	902	7.49	919	7.78	936	8.09
9600	822	6.69	839	6.98	854	7.26	870	7.55	886	7.85	901	8.13	917	8.42	—	—	—	—	—	—
	7.5-hp Oversized Motor & Drive						7.5-hp Oversized Motor & Field Supplied Motor Sheave[c]													

Notes:
1. For Standard Evaporator Fan Speed (rpm), reference Table 86, p. 119.
2. For High Evaporator Fan Speed (rpm), reference Table 87, p. 119.
3. For Oversized Evaporator Fan Speed (rpm), reference Table 88, p. 120.
4. Fan motor heat (MBh) = 3.15 x Fan bhp.
5. Field Supplied Fan Sheave BK190 Required. Field Supplied Belt may be necessary.
6. For all non-standard sheave combinations, please refer to accessory installer's guides ACC-SVN34*-EN and ACC-SVN72*-EN.
7. Refer to Table 89, p. 120 to determine additional static pressure drop due to other options/accessories.
8. Data includes pressure drop due to standard filters and wet coils. No accessories or options are included in pressure drop data.
9. Factory supplied motors, in commercial equipment, are definite purpose motors, specifically designed and tested to operate reliably and continuously at all cataloged conditions. Using the full horsepower range of our fan motors as shown in our tabular data will not result in nuisance tripping or premature motor failure. Our product's warranty will not be affected.

(a) Unit applications below 320 cfm/ton are only applicable to Constant Volume THD models without electric heat and YHD models equipped with modulating gas heat. See below for restrictions:
- Electric heaters on applications below 320 cfm/ton.
- Frostat and Crankcase heaters are required on applications below 320 cfm/ton.
- Multi-speed, single zone VAV or multi-zone VAV applications are capable of running below 320 cfm/ton during low speed airflow operation, but "full" airflow must be set to 320 cfm/ton or higher.

(b) 7.5-hp Oversized Motor & Field Supplied Motor Sheave[c]

(c) Field supplied motor sheave 1VP50 x 1 1/8 required.

Table 78. Evaporator fan performance—20 tons—THD240G—dehumidification (hot gas reheat) option

	External Static Pressure (Inches of Water)																			
	0.10		0.20		0.30		0.40		0.50		0.60		0.70		0.80		0.90		1.00	
cfm	rpm	bhp	rpm	bhp	rpm	bhp	rpm	bhp	rpm	bhp	rpm	bhp	rpm	bhp	rpm	bhp	rpm	bhp	rpm	bhp
	5-hp Standard Motor & Low Static Drive Accessory												5-hp Standard Motor & Drive							
4000[a]	—	—	—	—	—	—	—	—	454	0.88	485	1.01	513	1.16	540	1.30	568	1.46	594	1.61
4800[a]	—	—	—	—	—	—	449	1.01	480	1.15	510	1.31	540	1.48	567	1.65	591	1.81	614	1.98
5600[a]	—	—	—	—	456	1.20	485	1.36	512	1.53	539	1.70	565	1.87	591	2.05	617	2.24	641	2.44
6400	—	—	461	1.47	494	1.65	523	1.81	549	1.99	573	2.18	596	2.37	619	2.56	642	2.76	665	2.96
7200	467	1.75	502	1.98	533	2.19	561	2.38	587	2.56	610	2.76	632	2.97	653	3.19	674	3.41	694	3.62
8000	511	2.35	544	2.60	573	2.85	601	3.08	625	3.28	648	3.48	670	3.70	690	3.93	709	4.16	728	4.41
8800	556	3.06	586	3.34	614	3.62	640	3.89	664	4.13	687	4.36	708	4.58	728	4.80	746	5.05	764	5.31
9600	601	3.91	629	4.22	656	4.53	680	4.82	704	5.12	726	5.38	746	5.62	766	5.87	784	6.10	802	6.37
	5-hp Standard Motor & High Static Drive Accessory									7.5-hp Oversized Motor & Field Supplied Motor Sheave[b]										

Continued

	External Static Pressure (Inches of Water)																			
	1.10		1.20		1.30		1.40		1.50		1.60		1.70		1.80		1.90		2.00	
cfm	rpm	bhp	rpm	bhp	rpm	bhp	rpm	bhp	rpm	bhp	rpm	bhp	rpm	bhp	rpm	bhp	rpm	bhp	rpm	bhp
	5-hp Standard Motor & Drive								5-hp Standard Motor & High Static Drive Accessory											
4000[a]	619	1.77	642	1.93	663	2.08	683	2.24	703	2.39	721	2.55	739	2.71	757	2.87	774	3.04	790	3.20
4800[a]	636	2.16	659	2.34	682	2.52	704	2.71	726	2.90	746	3.09	765	3.28	783	3.46	801	3.65	817	3.83
5600[a]	663	2.64	684	2.83	704	3.03	724	3.23	743	3.43	763	3.64	782	3.86	802	4.08	821	4.29	839	4.51
6400	688	3.18	710	3.40	731	3.63	751	3.85	770	4.08	788	4.30	805	4.52	822	4.75	839	4.98	856	5.22
7200	715	3.84	735	4.06	755	4.30	775	4.55	795	4.80	814	5.05	833	5.31	850	5.56	866	5.81	882	6.06
8000	747	4.65	765	4.89	784	5.12	802	5.37	820	5.62	838	5.89	856	6.16	874	6.44	892	6.71	909	7.00
8800	782	5.57	799	5.84[c]	816	6.10	833	6.36	850	6.63	866	6.89	883	7.16	899	7.44	916	7.73	933	8.03
9600	819	6.64	835	6.92	851	7.21	867	7.49	883	7.79	898	8.08	914	8.36	—	—	—	—	—	—
	7.5-hp Oversized Motor & Field Supplied Motor Sheave[b]										7.5-hp Oversized Motor & Drive									

Notes:

1. For Standard Evaporator Fan Speed (rpm), reference Table 86, p. 119.
2. For High Evaporator Fan Speed (rpm), reference Table 87, p. 119.
3. For Oversized Evaporator Fan Speed (rpm), reference Table 88, p. 120.
4. Fan motor heat (MBh) = 3.15 x Fan bhp.
5. Data includes pressure drop due to standard filters and wet coils. No accessories or options are included in pressure drop data.
6. For all non-standard sheave combinations, please refer to accessory installer's guides ACC-SVN34*-EN and ACC-SVN72*-EN.
7. Factory supplied motors, in commercial equipment, are definite purpose motors, specifically designed and tested to operate reliably and continuously at all cataloged conditions. Using the full horsepower range of our fan motors as shown in our tabular data will not result in nuisance tripping or premature motor failure. Our product's warranty will not be affected.

(a) Unit applications below 320 cfm/ton are only applicable to Constant Volume THD models without electric heat and YHD models equipped with modulating gas heat. See below for restrictions:
- Electric heaters on applications below 320 cfm/ton.
- Frostat and Crankcase heaters are required on applications below 320 cfm/ton.
- Multi-speed, single zone VAV or multi-zone VAV applications are capable of running below 320 cfm/ton during low speed airflow operation, but "full" airflow must be set to 320 cfm/ton or higher.

(b) Field supplied motor sheave 1VP50 x 1 1/8 required.

(c) 7.5-hp Oversized Motor & Field Supplied Motor Sheave[b]

Table 79. Evaporator fan performance—20 tons—YH*240G

	External Static Pressure (Inches of Water)																			
	0.10		0.20		0.30		0.40		0.50		0.60		0.70		0.80		0.90		1.00	
cfm	rpm	bhp	rpm	bhp	rpm	bhp	rpm	bhp	rpm	bhp	rpm	bhp	rpm	bhp	rpm	bhp	rpm	bhp	rpm	bhp
	5-hp Standard Motor & Low Static Drive Accessory												5-hp Standard Motor & Drive							
4000[a]	—	—	—	—	—	—	—	—	465	0.92	494	1.06	522	1.20	549	1.35	576	1.51	602	1.66
4800[a]	—	—	—	—	—	—	463	1.07	493	1.22	524	1.39	552	1.56	578	1.72	601	1.89	624	2.06
5600[a]	—	—	—	—	474	1.29	501	1.46	528	1.63	555	1.80	581	1.98	607	2.17	632	2.37	655	2.56
6400	454	1.43	487	1.61	517	1.77	544	1.95	568	2.14	591	2.33	615	2.52	638	2.72	661	2.92	684	3.14
7200	502	1.98	533	2.19	561	2.38	587	2.56	610	2.76	632	2.97	653	3.19	674	3.41	695	3.63	715	3.84
8000	550	2.64	579	2.89	606	3.12	631	3.32	653	3.53	674	3.75	694	3.98	713	4.22	732	4.47	751	4.70
8800	599	3.46	627	3.75	652	4.00	675	4.23	697	4.45	718	4.69	737	4.93	755	5.18	773	5.44	790	5.71
9600	648	4.44	674	4.74	698	5.04	721	5.33	742	5.56	761	5.80	780	6.05	798	6.30	815	6.58	832	6.86
	5-hp Standard Motor & High Static Drive Accessory								7.5-hp Oversized Motor & Field Supplied Motor Sheave[b]								7.5-hp Oversized Motor & Drive			

Continued

	External Static Pressure (Inches of Water)																			
	1.10		1.20		1.30		1.40		1.50		1.60		1.70		1.80		1.90		2.00	
cfm	rpm	bhp	rpm	bhp	rpm	bhp	rpm	bhp	rpm	bhp	rpm	bhp	rpm	bhp	rpm	bhp	rpm	bhp	rpm	bhp
	5-hp Standard Motor Drive								5-hp Standard Motor & High Static Drive Accessory											
4000[a]	627	1.82	649	1.98	670	2.13	690	2.29	709	2.45	728	2.61	745	2.77	763	2.93	779	3.09	796	3.26
4800[a]	647	2.24	670	2.42	693	2.61	714	2.80	735	2.99	755	3.18	774	3.36	792	3.55	809	3.74	825	3.92
5600[a]	677	2.76	697	2.96	717	3.15	736	3.36	755	3.56	775	3.78	795	3.99	814	4.21	832	4.43	850	4.65
6400	706	3.36	727	3.58	748	3.81	766	4.03	784	4.26	802	4.48	819	4.71	836	4.94	853	5.18	870	5.42
7200	735	4.07	756	4.31	776	4.56	795	4.80	815	5.06	833	5.31	850	5.57	867	5.81	883	6.06	899	6.32
8000	770	4.94	788	5.18	806	5.44	825	5.69	843	5.96	861	6.23	879	6.51	896	6.79	913	7.07	930	7.36
8800	807	5.97	825	6.23	841	6.50	858	6.77	875	7.03	891	7.30	908	7.58	925	7.89	941	8.19	958	8.49
9600	848	7.14	864	7.43	879	7.73	895	8.01	911	8.30	926	8.59	—	—	—	—	—	—	—	—
	7.5-hp Oversized Motor & Drive																			

Notes:
1. For Standard Evaporator Fan Speed (rpm), reference Table 86, p. 119.
2. For High Evaporator Fan Speed (rpm), reference Table 87, p. 119.
3. For Oversized Evaporator Fan Speed (rpm), reference Table 88, p. 120.
4. Fan motor heat (MBh) = 3.15 x Fan bhp.
5. Data includes pressure drop due to standard filters and wet coils. No accessories or options are included in pressure drop data.
6. For all non-standard sheave combinations, please refer to accessory installer's guides ACC-SVN34*-EN and ACC-SVN72*-EN.
7. Factory supplied motors, in commercial equipment, are definite purpose motors, specifically designed and tested to operate reliably and continuously at all cataloged conditions. Using the full horsepower range of our fan motors as shown in our tabular data will not result in nuisance tripping or premature motor failure. Our product's warranty will not be affected.

(a) Unit applications below 320 cfm/ton are only applicable to Constant Volume THD models without electric heat and YHD models equipped with modulating gas heat. See below for restrictions:
- Electric heaters on applications below 320 cfm/ton.
- Frostat and Crankcase heaters are required on applications below 320 cfm/ton.
- Multi-speed, single zone VAV or multi-zone VAV applications are capable of running below 320 cfm/ton during low speed airflow operation, but "full" airflow must be set to 320 cfm/ton or higher.

(b) Field supplied motor sheave 1VP50 x 1 1/8 required.

Table 80. Evaporator fan performance—20 tons—YHD240G—dehumidification (hot gas reheat) option

	External Static Pressure (Inches of Water)																			
	0.10		0.20		0.30		0.40		0.50		0.60		0.70		0.80		0.90		1.00	
cfm	rpm	bhp	rpm	bhp	rpm	bhp	rpm	bhp	rpm	bhp	rpm	bhp	rpm	bhp	rpm	bhp	rpm	bhp	rpm	bhp
	5-hp Standard Motor & Low Static Drive Accessory												5-hp Standard Motor & Drive							
4000[a]	—	—	—	—	—	—	—	—	464	0.91	493	1.05	521	1.20	548	1.34	575	1.50	601	1.66
4800[a]	—	—	—	—	—	—	461	1.07	492	1.21	522	1.38	551	1.54	576	1.71	600	1.88	623	2.05
5600[a]	—	—	—	—	472	1.28	500	1.45	527	1.62	553	1.79	579	1.96	605	2.15	630	2.35	654	2.55
6400	451	1.42	485	1.60	515	1.76	541	1.93	566	2.12	589	2.32	613	2.51	636	2.70	658	2.90	681	3.12
7200	499	1.96	531	2.18	559	2.36	584	2.55	607	2.74	630	2.95	651	3.17	672	3.38	692	3.60	713	3.82
8000	548	2.64	577	2.88	603	3.10	627	3.29	650	3.50	672	3.72	691	3.95	711	4.19	730	4.43	748	4.67
8800	596	3.45	623	3.71	649	3.97	672	4.21	694	4.43	715	4.66	734	4.89	752	5.13	770	5.39	787	5.66[b]
9600	645	4.41	670	4.70	694	4.98	717	5.26	738	5.52	758	5.76	777	6.00	795	6.25	812	6.52	829	6.80
							5-hp Standard Motor & High Static Drive Accessory				7.5-hp Oversized Motor & Field Supplied Motor Sheave[c]					7.5-hp Oversized Motor & Drive				

Continued

	External Static Pressure (Inches of Water)																			
	1.10		1.20		1.30		1.40		1.50		1.60		1.70		1.80		1.90		2.00	
cfm	rpm	bhp	rpm	bhp	rpm	bhp	rpm	bhp	rpm	bhp	rpm	bhp	rpm	bhp	rpm	bhp	rpm	bhp	rpm	bhp
	5-hp Standard Motor Drive								5-hp Standard Motor & High Static Drive Accessory											
4000[a]	626	1.81	648	1.97	669	2.12	689	2.28	708	2.44	726	2.60	744	2.76	762	2.92	778	3.08	795	3.25
4800[a]	645	2.23	668	2.41	691	2.60	713	2.79	734	2.98	754	3.16	772	3.35	790	3.54	807	3.72	824	3.91
5600[a]	675	2.74	695	2.94	715	3.14	734	3.34	753	3.54	773	3.76	793	3.97	812	4.19	831	4.41	849	4.63
6400	704	3.34	725	3.56	746	3.79	764	4.01	783	4.23	800	4.46	817	4.69	834	4.91	851	5.15	868	5.39
7200	733	4.04	753	4.28	773	4.52	793	4.77	812	5.02	831	5.28	848	5.53	865	5.78	881	6.03	896	6.29
8000	767	4.91	785	5.15	804	5.40	822	5.65	840	5.92	858	6.19	876	6.46	894	6.75	911	7.03	927	7.31
8800	805	5.93[d]	822	6.19	839	6.45	855	6.72	872	6.99	888	7.25	905	7.54	922	7.83	938	8.13	955	8.43
9600	845	7.09	861	7.38	876	7.67	892	7.96	907	8.24	923	8.52	—	—	—	—	—	—	—	—
	7.5-hp Oversized Motor & Field Supplied Motor Sheave[c]						7.5-hp Oversized Motor & Drive													

Notes:
1. For Standard Evaporator Fan Speed (rpm), reference Table 86, p. 119.
2. For High Evaporator Fan Speed (rpm), reference Table 87, p. 119.
3. For Oversized Evaporator Fan Speed (rpm), reference Table 88, p. 120.
4. Fan motor heat (MBh) = 3.15 x Fan bhp.
5. Data includes pressure drop due to standard filters and wet coils. No accessories or options are included in pressure drop data.
6. For all non-standard sheave combinations, please refer to accessory installer's guides ACC-SVN34*-EN and ACC-SVN72*-EN.
7. Factory supplied motors, in commercial equipment, are definite purpose motors, specifically designed and tested to operate reliably and continuously at all cataloged conditions. Using the full horsepower range of our fan motors as shown in our tabular data will not result in nuisance tripping or premature motor failure. Our product's warranty will not be affected.

(a) Unit applications below 320 cfm/ton are only applicable to Constant Volume THD models without electric heat and YHD models equipped with modulating gas heat. See below for restrictions:
- Electric heaters on applications below 320 cfm/ton.
- Frostat and Crankcase heaters are required on applications below 320 cfm/ton.
- Multi-speed, single zone VAV or multi-zone VAV applications are capable of running below 320 cfm/ton during low speed airflow operation, but "full" airflow must be set to 320 cfm/ton or higher.

(b) 5-hp Standard Motor & High Static Drive Accessory
(c) Field supplied motor sheave 1VP50 x 1 1/8 required.
(d) 7.5-hp Oversized Motor & Field Supplied Motor Sheave[c]

Table 81. Evaporator fan performance—25 tons—TH*300G

	External Static Pressure (Inches of Water)																			
	0.10		0.20		0.30		0.40		0.50		0.60		0.70		0.80		0.90		1.00	
cfm	rpm	bhp	rpm	bhp	rpm	bhp	rpm	bhp	rpm	bhp	rpm	bhp	rpm	bhp	rpm	bhp	rpm	bhp	rpm	bhp
7.5-hp Standard Motor & Drive																				
5000[a]	—	—	—	—	—	—	—	—	—	—	—	—	—	—	575	1.75	599	1.93	622	2.10
6500[a]	—	—	—	—	—	—	—	—	—	—	579	2.26	603	2.46	626	2.65	648	2.85	671	3.06
7000[a]	—	—	—	—	—	—	—	—	580	2.42	603	2.63	625	2.83	646	3.05	668	3.25	689	3.47
7500[a]	—	—	—	—	—	—	579	2.65	604	2.84	627	3.04	648	3.26	669	3.48	689	3.71	709	3.93
8000	—	—	—	—	577	2.87	603	3.10	628	3.30	651	3.51	672	3.73	692	3.96	711	4.20	730	4.44
8500	—	—	574	3.09	602	3.34	628	3.60	653	3.83	675	4.04	696	4.25	716	4.49	735	4.74	753	5.00
9000	572	3.31	600	3.58	628	3.87	654	4.15	678	4.40	700	4.63	720	4.86	740	5.08	759	5.34	777	5.60
9500	600	3.85	628	4.17	655	4.47	680	4.75	703	5.02	724	5.27	745	5.52	764	5.76	783	6.00	801	6.28
10000	627	4.42	656	4.78	681	5.09	705	5.41	728	5.71	749	5.99	770	6.26	789	6.50	807	6.76	825	7.02
10500	657	5.13	683	5.45	708	5.80	731	6.13	753	6.44	775	6.76	794	7.04	813	7.31	831	7.57	849	7.84
11000	685	5.81	711	6.21	735	6.58	758	6.93	778	7.23	800	7.58	819	7.88	838	8.19	856	8.45	—	—
7.5-hp Standard Motor & High Static Drive Accessory																				

Continued

	External Static Pressure (Inches of Water)									
	1.10		1.20		1.30		1.40		1.50	
cfm	rpm	bhp	rpm	bhp	rpm	bhp	rpm	bhp	rpm	bhp
7.5-hp Standard Motor & Drive										
5000[a]	644	2.28	666	2.46	688	2.65	710	2.85	731	3.04
6500[a]	693	3.28	715	3.50	736	3.73	757	3.96	775	4.19
7000[a]	710	3.68	731	3.91	752	4.15	772	4.40	792	4.64
7500[a]	729	4.16	748	4.38	768	4.62	787	4.87	807	5.13
8000	749	4.68	768	4.92	786	5.16	804	5.41	823	5.66
8500	771	5.25	789	5.51	806	5.76	824	6.02	841	6.28
9000	794	5.87	811	6.14	827	6.41	844	6.69	861	6.95
9500	817	6.55	834	6.83	850	7.12	866	7.41	882	7.69
10000	841	7.29	857	7.59	873	7.87	888	8.18	904	8.48
10500	865	8.11	881	8.41	—	—	—	—	—	—
11000	—	—	—	—	—	—	—	—	—	—
7.5-hp Standard Motor & High Static Drive Accessory										

Notes:
1. For Standard Evaporator Fan Speed (rpm), reference Table 86, p. 119.
2. For High Evaporator Fan Speed (rpm), reference Table 87, p. 119.
3. For Oversized Evaporator Fan Speed (rpm), reference Table 88, p. 120.
4. Fan motor heat (MBh) = 3.15 x Fan bhp.
5. Data includes pressure drop due to standard filters and wet coils. No accessories or options are included in pressure drop data.
6. For all non-standard sheave combinations, please refer to accessory installer's guides ACC-SVN34*-EN and ACC-SVN72*-EN.
7. Factory supplied motors, in commercial equipment, are definite purpose motors, specifically designed and tested to operate reliably and continuously at all cataloged conditions. Using the full horsepower range of our fan motors as shown in our tabular data will not result in nuisance tripping or premature motor failure. Our product's warranty will not be affected.

(a) Unit applications below 320 cfm/ton are only applicable to Constant Volume THD models without electric heat and YHD models equipped with modulating gas heat. See below for restrictions:
- Electric heaters on applications below 320 cfm/ton.
- Frostat and Crankcase heaters are required on applications below 320 cfm/ton.
- Multi-speed, single zone VAV or multi-zone VAV applications are capable of running below 320 cfm/ton during low speed airflow operation, but "full" airflow must be set to 320 cfm/ton or higher.

Table 82. Evaporator fan performance—25 tons—THD300G—dehumidification (hot gas reheat) option

	External Static Pressure (Inches of Water)																			
	0.10		0.20		0.30		0.40		0.50		0.60		0.70		0.80		0.90		1.00	
cfm	rpm	bhp	rpm	bhp	rpm	bhp	rpm	bhp	rpm	bhp	rpm	bhp	rpm	bhp	rpm	bhp	rpm	bhp	rpm	bhp
	7.5-hp Standard Motor & Low Static Drive																			
5000[a]	-	-	-	-	-	-	-	-	-	-	-	-	602	1.57	633	1.73	661	1.89	688	2.05
6500[a]	-	-	-	-	-	-	587	2.00	614	2.18	640	2.35	665	2.53	690	2.70	714	2.89	739	3.08
7000[a]	-	-	-	-	588	2.19	616	2.39	641	2.57	666	2.75	690	2.94	713	3.13	736	3.32	759	3.52
7500[a]	-	-	593	2.42	620	2.63	645	2.82	670	3.02	693	3.21	716	3.41	738	3.61	760	3.82	782	4.02
8000	597	2.66	625	2.89	650	3.09	674	3.29	698	3.51	722	3.73	743	3.93	765	4.15	785	4.36	806	4.57
8500	632	3.18	658	3.41	683	3.64	706	3.86	728	4.07	750	4.29	771	4.51	792	4.74	812	4.97	832	5.20
9000	666	3.74	692	4.00	714	4.22	737	4.46	757	4.67	779	4.92	799	5.15	819	5.39	839	5.64	858	5.88
9500	701	4.38	726	4.67	746	4.87	769	5.15	788	5.36	808	5.61	828	5.86	847	6.10	866	6.36	885	6.62
10000	737	5.11	760	5.39	778	5.60	800	5.89	819	6.11	838	6.37	858	6.64	876	6.89	895	7.17	913	7.45
10500	766	5.76	792	6.15	813	6.44	832	6.70	851	6.96	869	7.21	888	7.50	905	7.75	923	8.05	941	8.33
11000	806	6.73	824	6.98	844	7.27	864	7.56	883	7.88	900	8.14	918	8.44	-	-	-	-	-	-
	7.5-hp Standard Motor & Drive												7.5-hp Standard Motor & High Static Drive Accessory							

Continued

	External Static Pressure (Inches of Water)									
	1.10		1.20		1.30		1.40		1.50	
cfm	rpm	bhp	rpm	bhp	rpm	bhp	rpm	bhp	rpm	bhp
	7.5-hp Standard Motor & Low Static Drive				7.5-hp Standard Motor & Drive					
5000[a]	712	2.20	736	2.36	758	2.52	779	2.67	799	2.82
6500[a]	763	3.28	787	3.48	810	3.69	833	3.90	855	4.11
7000[a]	782	3.73	805	3.94	827	4.15	849	4.37	871	4.59
7500[a]	803	4.23	825	4.44	846	4.66	867	4.89	888	5.12
8000	826	4.79	846	5.01	867	5.24	886	5.47	906	5.71
8500	851	5.42	870	5.65	889	5.88	908	6.12	927	6.37
9000	876	6.11	895	6.36	913	6.61	931	6.85	949	7.09
9500	903	6.88	921	7.13	938	7.38	955	7.63	973	7.89
10000	930	7.70	947	7.97	964	8.22	981	8.50	-	-
10500	958	8.60	-	-	-	-	-	-	-	-
11000	-	-	-	-	-	-	-	-	-	-
	7.5-hp Standard Motor & High Static Drive Accessory									

Notes:

1. For Standard Evaporator Fan Speed (rpm), reference Table 86, p. 119.
2. For High Evaporator Fan Speed (rpm), reference Table 87, p. 119.
3. For Oversized Evaporator Fan Speed (rpm), reference Table 88, p. 120.
4. Fan motor heat (MBh) = 3.15 x Fan bhp.
5. Data includes pressure drop due to standard filters and wet coils. No accessories or options are included in pressure drop data.
6. For all non-standard sheave combinations, please refer to accessory installer's guides ACC-SVN34*-EN and ACC-SVN72*-EN.
7. Factory supplied motors, in commercial equipment, are definite purpose motors, specifically designed and tested to operate reliably and continuously at all cataloged conditions. Using the full horsepower range of our fan motors as shown in our tabular data will not result in nuisance tripping or premature motor failure. Our product's warranty will not be affected.

(a) Unit applications below 320 cfm/ton are only applicable to Constant Volume THD models without electric heat and YHD models equipped with modulating gas heat. See below for restrictions:
- Electric heaters on applications below 320 cfm/ton.
- Frostat and Crankcase heaters are required on applications below 320 cfm/ton.
- Multi-speed, single zone VAV or multi-zone VAV applications are capable of running below 320 cfm/ton during low speed airflow operation, but "full" airflow must be set to 320 cfm/ton or higher.

Table 83. Evaporator fan performance—25 tons—YH*300G

	External Static Pressure (Inches of Water)																			
	0.10		0.20		0.30		0.40		0.50		0.60		0.70		0.80		0.90		1.00	
cfm	rpm	bhp	rpm	bhp	rpm	bhp	rpm	bhp	rpm	bhp	rpm	bhp	rpm	bhp	rpm	bhp	rpm	bhp	rpm	bhp
7.5-hp Standard Motor & Drive																				
5000[a]	—	—	—	—	—	—	—	—	—	—	—	—	—	—	586	1.83	609	2.00	632	2.18
6500[a]	—	—	—	—	—	—	—	—	—	—	596	2.41	619	2.60	642	2.80	664	3.00	687	3.22
7000[a]	—	—	—	—	—	—	—	—	599	2.59	621	2.80	643	3.01	665	3.22	686	3.43	707	3.65
7500[a]	—	—	—	—	—	—	603	2.83	626	3.03	648	3.25	668	3.47	688	3.70	708	3.92	728	4.15
8000	—	—	—	—	606	3.12	631	3.32	653	3.53	674	3.75	694	3.98	713	4.22	732	4.47	751	4.70
8500	582	3.16	609	3.41	635	3.66	658	3.87	680	4.09	701	4.31	721	4.55	739	4.80	757	5.05	775	5.31
9000	611	3.68	639	3.99	664	4.25	687	4.49	708	4.73	728	4.95	748	5.18	766	5.44	783	5.71	800	5.98
9500	644	4.36	668	4.60	692	4.89	715	5.16	736	5.41	756	5.66	775	5.89	793	6.15	810	6.43	826	6.71
10000	676	5.05	698	5.31	722	5.62	744	5.93	764	6.19	784	6.44	802	6.68	820	6.95	837	7.22	853	7.51
10500	703	5.70	728	6.07	752	6.43	772	6.72	792	7.00	811	7.27	829	7.54	847	7.81	864	8.08	880	8.38
11000	739	6.65	759	6.93	780	7.27	801	7.58	821	7.92	840	8.23	857	8.48	—	—	—	—	—	—
					7.5-hp Standard Motor & High Static Drive Accessory															

Continued

	External Static Pressure (Inches of Water)									
	1.10		1.20		1.30		1.40		1.50	
cfm	rpm	bhp	rpm	bhp	rpm	bhp	rpm	bhp	rpm	bhp
7.5-hp Standard Motor & Drive										
5000[a]	653	2.36	675	2.54	697	2.74	719	2.93	740	3.13
6500[a]	709	3.44	731	3.67	751	3.90	770	4.13	788	4.35
7000[a]	727	3.88	748	4.11	769	4.36	789	4.60	808	4.85
7500[a]	748	4.37	767	4.61	787	4.86	806	5.12	825	5.38
8000	770	4.94	788	5.18	806	5.44	825	5.69	843	5.96
8500	793	5.57	811	5.83	828	6.08	845	6.34	862	6.61
9000	817	6.25	834	6.52	851	6.79	867	7.06	884	7.34
9500	843	6.99	858	7.27	875	7.57	890	7.84	906	8.13
10000	869	7.79	884	8.10	899	8.39	—	—	—	—
10500	—	—	—	—	—	—	—	—	—	—
11000	—	—	—	—	—	—	—	—	—	—
7.5-hp Standard Motor & High Static Drive Accessory										

Notes:
1. For Standard Evaporator Fan Speed (rpm), reference Table 86, p. 119.
2. For High Evaporator Fan Speed (rpm), reference Table 87, p. 119.
3. For Oversized Evaporator Fan Speed (rpm), reference Table 88, p. 120.
4. Fan motor heat (MBh) = 3.15 x Fan bhp.
5. Data includes pressure drop due to standard filters and wet coils. No accessories or options are included in pressure drop data.
6. For all non-standard sheave combinations, please refer to accessory installer's guides ACC-SVN34*-EN and ACC-SVN72*-EN.
7. Factory supplied motors, in commercial equipment, are definite purpose motors, specifically designed and tested to operate reliably and continuously at all cataloged conditions. Using the full horsepower range of our fan motors as shown in our tabular data will not result in nuisance tripping or premature motor failure. Our product's warranty will not be affected.

(a) Unit applications below 320 cfm/ton are only applicable to Constant Volume THD models without electric heat and YHD models equipped with modulating gas heat. See below for restrictions:
- Electric heaters on applications below 320 cfm/ton.
- Frostat and Crankcase heaters are required on applications below 320 cfm/ton.
- Multi-speed, single zone VAV or multi-zone VAV applications are capable of running below 320 cfm/ton during low speed airflow operation, but "full" airflow must be set to 320 cfm/ton or higher.

Table 84. Evaporator fan performance—25 tons—YHD300G—dehumidification (hot gas reheat) option

	External Static Pressure (Inches of Water)																			
	0.10		0.20		0.30		0.40		0.50		0.60		0.70		0.80		0.90		1.00	
cfm	rpm	bhp	rpm	bhp	rpm	bhp	rpm	bhp	rpm	bhp	rpm	bhp	rpm	bhp	rpm	bhp	rpm	bhp	rpm	bhp
	7.5-hp Standard Motor & Low Static Drive Accessory																			
5000[a]	-	-	-	-	-	-	-	-	-	-	584	1.48	613	1.63	642	1.78	670	1.94	696	2.10
6500[a]	-	-	-	-	-	-	606	2.13	633	2.30	658	2.47	683	2.65	708	2.84	732	3.03	756	3.22
7000[a]	-	-	585	2.17	612	2.36	637	2.54	662	2.72	686	2.91	710	3.10	733	3.30	756	3.49	779	3.70
7500[a]	593	2.44	618	2.60	645	2.82	668	3.01	692	3.20	716	3.41	737	3.60	760	3.81	781	4.01	803	4.23
8000	626	2.88	654	3.12	677	3.32	700	3.53	723	3.75	745	3.95	767	4.17	788	4.38	808	4.60	829	4.82
8500	665	3.48	688	3.68	711	3.90	733	4.13	755	4.35	776	4.57	797	4.80	816	5.02	836	5.25	855	5.47
9000	702	4.11	723	4.31	745	4.54	766	4.78	787	5.02	807	5.26	827	5.49	846	5.73	865	5.97	884	6.21
9500	734	4.72	758	5.01	780	5.27	799	5.49	820	5.77	838	5.99	858	6.27	876	6.50	895	6.76	913	7.02
10000	771	5.49	796	5.83	815	6.09	835	6.34	852	6.55	871	6.82	889	7.10	907	7.35	925	7.63	942	7.89
10500	814	6.50	831	6.68	848	6.90	869	7.23	886	7.46	903	7.73	921	8.00	939	8.30	956	8.57	-	-
11000	848	7.34	866	7.61	885	7.92	903	8.19	920	8.46	-	-	-	-	-	-	-	-	-	-
	7.5-hp Standard Motor & Drive						7.5-hp Standard Motor & High Static Drive Accessory													

Continued

	External Static Pressure (Inches of Water)									
	1.10		1.20		1.30		1.40		1.50	
cfm	rpm	bhp	rpm	bhp	rpm	bhp	rpm	bhp	rpm	bhp
			7.5-hp Standard Motor & Drive							
5000[a]	722	2.27[b]	746	2.43	770	2.60	791	2.76	812	2.92
6500[a]	779	3.41	801	3.61	823	3.81	845	4.01	866	4.22
7000[a]	801	3.90	822	4.10	844	4.31	865	4.53	885	4.75
7500[a]	824	4.44	845	4.66	866	4.88	886	5.10	905	5.32
8000	849	5.05	869	5.27	889	5.51	908	5.73	927	5.97
8500	875	5.72	895	5.96	913	6.19	932	6.43	951	6.68
9000	902	6.45	921	6.71	938	6.94	956	7.19	975	7.46
9500	930	7.26	948	7.52	965	7.77	983	8.04	-	-
10000	959	8.15	976	8.41	-	-	-	-	-	-
10500	-	-	-	-	-	-	-	-	-	-
11000	-	-	-	-	-	-	-	-	-	-
	7.5-hp Standard Motor & High Static Drive Accessory									

Notes:
1. For Standard Evaporator Fan Speed (rpm), reference Table 86, p. 119.
2. For High Evaporator Fan Speed (rpm), reference Table 87, p. 119.
3. For Oversized Evaporator Fan Speed (rpm), reference Table 88, p. 120.
4. Fan motor heat (MBh) = 3.15 x Fan bhp.
5. Data includes pressure drop due to standard filters and wet coils. No accessories or options are included in pressure drop data.
6. For all non-standard sheave combinations, please refer to accessory installer's guides ACC-SVN34*-EN and ACC-SVN72*-EN.
7. Factory supplied motors, in commercial equipment, are definite purpose motors, specifically designed and tested to operate reliably and continuously at all cataloged conditions. Using the full horsepower range of our fan motors as shown in our tabular data will not result in nuisance tripping or premature motor failure. Our product's warranty will not be affected.

(a) Unit applications below 320 cfm/ton are only applicable to Constant Volume THD models without electric heat and YHD models equipped with modulating gas heat. See below for restrictions:
- Electric heaters on applications below 320 cfm/ton.
- Frostat and Crankcase heaters are required on applications below 320 cfm/ton.
- Multi-speed, single zone VAV or multi-zone VAV applications are capable of running below 320 cfm/ton during low speed airflow operation, but "full" airflow must be set to 320 cfm/ton or higher.

(b) 7.5-hp Standard Motor & Low Static Drive Accessory.

Table 85. Standard motor and drive/fan speed (rpm)

Tons	Unit Model Number	6 Turns Open	5 Turns Open	4 Turns Open	3 Turns Open	2 Turns Open	1 Turn Open	Closed
12½	T/YS*150G3,4,W,K	642	683	725	766	808	849	N/A
	T/YH*150G3,4,W	452	485	518	551	584	619	N/A
15	T/YS*180G3,4,W,K	559	600	642	683	725	766	N/A
	T/YH*180G3,4,W	452	485	518	551	584	619	N/A
17½	T/YS*210/211G3,4,W,K	605	650	695	740	785	829	N/A
	T/YH*210G3,4,W	506	544	582	620	658	694	N/A
20	T/YS*240G3,4,W,K	605	650	695	740	785	829	N/A
	T/YH*240G3,4,W	506	544	582	620	658	694	N/A
25	T/YS*300/301G3,4,W,K	694	731	768	805	842	881	N/A
	T/YH*300G3,4,W	581	619	657	695	733	769	N/A
	T/YH*300G3,4,W with Reheat	694	739	784	829	874	919	N/A

Note: Factory set at 3 turns open.

Table 86. Standard motor and low static fan drive

Tons	Unit Model Number	6 Turns Open	5 Turns Open	4 Turns Open	3 Turns Open	2 Turns Open	1Turn Open	Closed
12½	T/YS*150G3,4,W,K	452	485	518	551	584	619	N/A
	T/YH*150G3,4,W	351	377	403	429	455	480	N/A
15	T/YS*180G3,4,W,K	452	485	518	551	584	619	N/A
	T/YH*180G3,4,W	351	377	403	429	455	480	N/A
17½	T/YS*210/211G3,4,W,K	506	544	582	620	658	694	N/A
	T/YH*210G3,4,W	450	480	510	540	570	600	N/A
20	T/YS*240G3,4,W,K	506	544	582	620	658	694	N/A
	T/YH*240G3,4,W	450	480	510	540	570	600	N/A
25	T/YS*300/301G3,4,W,K	581	619	657	695	733	769	N/A
	T/YH*300G3,4,W with Reheat	581	619	657	695	733	769	N/A

Table 87. Standard motor and high static drive accessory sheave/fan speed (rpm)

Tons	Unit Model Number	6 Turns Open	5 Turns Open	4 Turns Open	3 Turns Open	2 Turns Open	1 Turn Open	Closed
12½	T/YS*150G3,4,W,K	766	808	849	891	891	974	N/A
	T/YH*150G3,4,W	619	652	685	718	751	786	N/A
15	T/YS*180G3,4,W,K	719	753	786	820	853	887	N/A
	T/YH*180G3,4,W	619	652	685	718	751	786	N/A
17½	T/YS*210/211G3,4,W,K	829	874	919	964	1009	1053	N/A
	T/YH*210G3,4,W	694	731	768	805	842	881	N/A
20	T/YS*240G3,4,W,K	829	874	919	964	1009	1053	N/A
	T/YH*240G3,4,W	694	731	768	805	842	881	N/A
25	T/YS*300/301G3,4,W,K	806	844	882	920	958	994	N/A
	T/YH*300G3,4,W	694	739	784	829	874	919	N/A
	T/YH*300G3,4,W with Reheat	806	844	882	920	958	994	N/A

Table 88. Oversized motor and drive/fan speed (rpm)

Tons	Unit Model Number	6 Turns Open	5 Turns Open	4 Turns Open	3 Turns Open	2 Turns Open	1 Turn Open	Closed
12½	T/YS*150G3,4,W,K	863	919	974	1030	1085	1141	N/A
	T/YH*150G3,4,W	695	747	799	851	903	953	N/A
15	T/YS*180G3,4,W,K	695	747	799	851	903	953	N/A
	T/YH*180G3,4,W	695	747	799	851	903	953	N/A
17½	T/YS*210/211G3,4,W,K	806	844	882	920	958	994	N/A
	T/YH*210G3,4,W	806	844	882	920	958	994	N/A
20	T/YS*240G3,4,W,K	806	844	882	920	958	994	N/A
	T/YH*240G3,4,W	806	844	882	920	958	994	N/A

Table 89. Static pressure drop through accessories (inches water column)

Tons	Unit Model Number	cfm[a]	Std Filters[b]	Through Reheat Coil	2" MERV 8 Filter[c]	2" MERV 13 Filter[c]	Std Economizer with OA/RA Dampers[d]		Low Leak Economizer with OA/RA Dampers[d]		Electric Heater Accessory (kW)[e]			
							100% OA	100% RA	100% OA	100% RA	14–27	36	54	72
12½	T/YSH150G	4000	0.05	—	0.08	0.12	0.19	0.02	0.27	0.06	0.03	0.03	0.04	—
		5000	0.07	—	0.11	0.15	0.26	0.03	0.42	0.10	0.04	0.05	0.06	—
		6000	0.10	—	0.15	0.19	0.33	0.04	0.61	0.14	0.06	0.07	0.09	—
	T/YSD150G	4000	0.05	—	0.08	0.12	0.19	0.02	0.27	0.18	0.03	0.03	0.04	—
		5000	0.07	—	0.11	0.15	0.26	0.03	0.41	0.29	0.04	0.05	0.06	—
		6000	0.10	—	0.15	0.19	0.33	0.04	0.58	0.44	0.06	0.07	0.09	—
	T/YHH150G	4000	0.02	—	0.04	0.07	0.19	0.02	0.25	0.04	0.03	0.03	0.04	—
		5000	0.03	—	0.05	0.10	0.26	0.03	0.39	0.07	0.04	0.05	0.06	—
		6000	0.05	—	0.07	0.13	0.33	0.04	0.57	0.10	0.06	0.07	0.09	—
	T/YHD150G	2500	0.01	0.00	0.01	0.03	0.07	0.01	0.07	0.04	*	*	*	—
		4000	0.02	0.01	0.04	0.08	0.19	0.02	0.16	0.10	0.03	0.03	0.04	—
		5000	0.03	0.02	0.05	0.11	0.26	0.03	0.24	0.16	0.04	0.05	0.06	—
		6000	0.05	0.03	0.07	0.13	0.33	0.04	0.33	0.24	0.06	0.07	0.09	—
15	T/YSH180G	4800	0.03	—	0.06	0.09	0.14	0.03	0.36	0.06	0.04	0.04	0.05	—
		6000	0.05	—	0.09	0.13	0.20	0.04	0.57	0.10	0.06	0.07	0.08	—
		7200	0.07	—	0.11	0.16	0.27	0.05	0.81	0.14	0.09	0.10	0.12	—
	T/YSD180G	4800	0.04	—	0.07	0.11	0.14	0.03	0.22	0.15	0.04	0.04	0.05	—
		6000	0.06	—	0.10	0.14	0.20	0.04	0.33	0.24	0.06	0.07	0.08	—
		7200	0.09	—	0.13	0.18	0.27	0.05	0.45	0.35	0.09	0.10	0.12	—
	T/YHH180G	4800	0.03	—	0.04	0.06	0.14	0.03	0.36	0.06	0.04	0.04	0.05	—
		6000	0.05	—	0.06	0.1	0.20	0.04	0.57	0.10	0.06	0.07	0.08	—
		7200	0.07	—	0.08	0.13	0.27	0.05	0.81	0.14	0.09	0.10	0.12	—
	T/YHD180G	3000	0.02	0.01	0.02	0.03	0.07	0.03	0.10	0.06	*	*	*	—
		4800	0.04	0.01	0.05	0.08	0.14	0.03	0.22	0.15	0.04	0.04	0.05	—
		6000	0.06	0.02	0.06	0.11	0.2	0.04	0.33	0.24	0.06	0.07	0.08	—
		7200	0.09	0.03	0.08	0.14	0.27	0.05	0.45	0.35	0.09	0.1	0.12	—

Table 89. Static pressure drop through accessories (inches water column) (continued)

Tons	Unit Model Number	cfm[a]	Std Filters[b]	Through Reheat Coil	2" MERV 8 Filter[c]	2" MERV 13 Filter[c]	Std Economizer with OA/RA Dampers[d]		Low Leak Economizer with OA/RA Dampers[d]		Electric Heater Accessory (kW)[e]			
							100% OA	100% RA	100% OA	100% RA	14–27	36	54	72
17½	T/YSH210/211G	5600	0.05	—	0.08	0.11	0.18	0.04	0.49	0.08	—	0.05	0.06	0.07
		7000	0.07	—	0.11	0.15	0.26	0.04	0.77	0.13	—	0.08	0.09	0.11
		8400	0.10	—	0.14	0.18	0.35	0.06	1.11	0.19	—	0.12	0.13	0.16
	T/YSD210/211G	5600	0.06	—	0.08	0.13	0.18	0.04	0.29	0.21	—	0.05	0.06	0.07
		7000	0.09	—	0.11	0.17	0.26	0.04	0.43	0.33	—	0.08	0.09	0.11
		8400	0.12	—	0.14	0.21	0.35	0.06	0.59	0.48	—	0.12	0.13	0.16
	T/YHH210G	5600	0.03	—	0.05	0.09	0.18	0.04	0.49	0.08	—	0.05	0.06	0.07
		7000	0.05	—	0.08	0.12	0.26	0.04	0.77	0.13	—	0.08	0.09	0.11
		8400	0.07	—	0.10	0.15	0.35	0.06	1.11	0.19	—	0.12	0.13	0.16
	T/YHD210G	3500	0.01	0.04	0.02	0.04	0.09	0.03	0.13	0.08	—	*	*	*
		5600	0.04	0.10	0.05	0.10	0.18	0.04	0.29	0.21	—	0.05	0.06	0.07
		7000	0.06	0.13	0.08	0.13	0.26	0.04	0.43	0.33	—	0.08	0.09	0.11
		8400	0.08	0.16	0.10	0.16	0.35	0.06	0.59	0.48	—	0.12	0.13	0.16
20	T/YSH240G	6400	0.06	—	0.10	0.14	0.22	0.04	0.64	0.11	—	0.06	0.08	0.09
		8000	0.09	—	0.13	0.18	0.32	0.05	1.0	0.17	—	0.10	0.12	0.14
		9600	0.13	—	0.17	0.21	0.44	0.07	1.44	0.24	—	0.14	0.17	0.20
	T/YSD240G	6400	0.07	—	0.11	0.15	0.22	0.04	0.37	0.27	—	0.06	0.08	0.09
		8000	0.11	—	0.15	0.20	0.32	0.05	0.54	0.43	—	0.10	0.12	0.14
		9600	0.16	—	0.20	0.25	0.44	0.07	0.75	0.62	—	0.14	0.17	0.20
	T/YHH240G	6400	0.04	—	0.07	0.11	0.22	0.04	0.64	0.11	—	0.06	0.08	0.09
		8000	0.06	—	0.09	0.14	0.32	0.05	1.0	0.17	—	0.10	0.12	0.14
		9600	0.09	—	0.12	0.18	0.44	0.07	1.44	0.24	—	0.14	0.17	0.20
	T/YHD240G	4000	0.02	0.02	0.03	0.06	0.11	0.03	0.16	0.10	—	*	*	*
		6400	0.05	0.05	0.08	0.12	0.22	0.04	0.37	0.27	—	0.06	0.08	0.09
		8000	0.08	0.07	0.10	0.15	0.32	0.05	0.54	0.43	—	0.10	0.12	0.14
		9600	0.11	0.11	0.14	0.19	0.44	0.07	0.75	0.62	—	0.14	0.17	0.20
25	T/YSH300/301G	7000	0.07	—	0.11	0.15	0.26	0.04	0.77	0.13	—	0.08	0.10	0.11
		9000	0.11	—	0.15	0.20	0.4	0.07	1.27	0.21	—	0.13	0.15	0.18
		11000	0.17	—	0.22	0.26	0.6	0.1	1.89	0.32	—	0.18	0.22	0.26
	T/YSD300/301G	7000	0.09	—	0.13	0.17	0.26	0.04	0.43	0.33	—	0.08	0.10	0.11
		9000	0.14	—	0.18	0.23	0.4	0.07	0.67	0.55	—	0.13	0.15	0.18
		11000	0.21	—	0.25	0.32	0.57	0.1	0.95	0.82	—	0.18	0.22	0.26
	T/YHH300G	7000	0.05	—	0.08	0.12	0.26	0.04	0.77	0.13	—	0.08	0.10	0.11
		9000	0.08	—	0.10	0.16	0.4	0.07	1.27	0.21	—	0.13	0.15	0.18
		11000	0.12	—	0.15	0.20	0.6	0.1	1.89	0.32	—	0.18	0.22	0.26
	T/YHD300G	5000	0.03	0.02	0.04	0.08	0.15	0.03	0.24	0.16	—	*	*	*
		7000	0.06	0.04	0.09	0.13	0.26	0.04	0.43	0.33	—	0.08	0.1	0.11
		9000	0.10	0.06	0.12	0.18	0.4	0.07	0.67	0.55	—	0.13	0.15	0.18
		11000	0.10	0.08	0.17	0.22	0.57	0.10	0.95	0.82	—	0.18	0.22	0.26

(a) Unit applications below 320 cfm/ton are only applicable to Constant Volume THD models without electric heat and YHD models equipped with modulating gas heat. See below for restrictions:
- Electric heaters on applications below 320 cfm/ton.
- Frostat and Crankcase heaters are required on applications below 320 cfm/ton.
- Multi-speed, single zone VAV or multi-zone VAV applications are capable of running below 320 cfm/ton during low speed airflow operation, but "full" airflow must be set to 320 cfm/ton or higher.

(b) Tested with: 2" filters 12½–25 tons.

(c) Difference in pressure drop should be considered when utilizing optional 2" pleated filters.

(d) OA = Outside Air and RA = Return Air.

(e) Nominal kW ratings at 240, 480, 600 volts.

Table 90. Gas fired heating capacities

Tons	Unit Model Number	Heating Input MBh[a]	Heating Output MBh[a]	Air Temp. Rise, °F
12½	YS/H*150G-L1	150/100	120/80	10–40
	YS/H*150G-H1	250/175	200/140	25–55
	YS/H*150G-V1	350/140	280/112	35–65
15	YS/H*180G-L1	250/175	200/140	25–55
	YS/H*180G-H1	350/250	280/200	35–65
	YS/H*180G-V1	350/140	280/112	35–65
17½	YS/H*210G-L1	250/175	200/140	25–55
	YS/H*210G-H1	350/250	280/200	35–65
	YS/H*210G-V1	350/140	280/112	35–65
20	YS/H*240G-L1	250/175	200/140	15–45
	YS/H*240G-H1	400/300	320/240	25–55
	YS/H*240G-V1	350/140	280/112	35–65
25	YS/H*300G-L1	250/175	200/140	15–45
	YS/H*300G-H1	400/300	320/240	25–55
	YS/H*300G-V1	350/140	280/112	35–65

(a) For two stage heaters (input or output), second stage is total heating capacity. Second stage/first stage.

Table 91. Auxiliary electric heat capacity

Tons	Unit Model Number	Total[a]		No. of Stages	Stage1		Stage 2	
		kW Input[b]	MBh Output		kW Input	MBh Output	kW Input	MBh Output
12½–15	TS/H*150G3,4,W TS/H*180G3,4,W	18.00	61.47	1	18.00	61.47	—	—
		27.00[c]	92.15	2	9.00	30.72	18.00	61.43
		36.00	122.94	2	18.00	61.47	18.00	61.47
		54.00	184.41	2	36.00	122.94	18.00	61.47
17½–25	TS/H*210/211G3,4,W TS/H*240G3,4,W TS/H*300/301G3,4,W	36.00	122.94	2	18.00	61.47	18.00	61.47
		54.00	184.41	2	36.00	122.94	18.00	61.47
		72.00	245.88	2	36.00	122.94	36.00	122.94

(a) Heaters are rated at 240V, 380V, 480V, and 600V. For other than rated voltage, CAP = (voltage/rated voltage)^2 x rated cap.
(b) For all input/output categories, does not include fan power or heat.
(c) 27 kW heater can be used with TSD180F4, TSD210F4, TSD240F4, and TSD300F4 only. Cannot be used with oversized motor.
* Indicates both downflow and horizontal units.

Table 92. Electric heater voltage correction factors (applicable to auxiliary heat capacity)

Nominal Voltage	Distribution Voltage	Capacity Multiplier
240	208	0.75
	230	0.92
	240	1.00
480	440	0.84
	460	0.94
	480	1.00
600	540	0.81
	575	0.92
	600	1.00

Table 93. Air temperature rise across electric heaters (°F)

kW	Stages	12½ Tons 5000 cfm Three Phase TS*150G TH*150G	15 Tons 6000 cfm Three Phase TS*180G TH*180G	17½ Tons 7000 cfm Three Phase TS*210/211G TH*210G	20 Tons 8000 cfm Three Phase TS*240G TH*240G	25 Ton 9000 cfm Three Phase TS*300/301G TH*300G
9.00	1	—	—	—	—	—
17.30	1	—	—	—	—	—
18.00	1	11.4	9.5	—	—	—
27.00	2	—	14.2[a]	12.2	10.7	9.5
36.00	2	22.8	19.0	16.3	14.2	12.6
54.00	2	34.1	28.5	24.4	21.3	19.0
72.00	2	—	—	32.5	28.5	25.3

Notes:
1. For minimum design airflow, see airflow performance table for each unit. To calculate temp rise at different airflow, use the following formula: Temp. rise across Electric Heater = kW x 3414/1.08 x cfm.
2. *Indicates both downflow and horizontal units.

(a) 27 kW heater can be used with TSD180F4, TSD210F4, TSD240F4, and TSD300F4 only. Cannot be used with oversized motor.

Table 94. Hot gas reheat temperature rise[a], [b]

Tons	SCFM	Leaving Evaporator Dry Bulb [°F][c]						
		35	40	45	50	55	60	65
12½	2500	30.6	31.8	32.9	33.8	34.7	35.5	36.2
	3000	25.7	26.8	27.8	28.7	29.5	30.2	30.8
	3500	22.2	23.2	24.1	24.9	25.6	26.3	26.9
	4000	19.4	20.4	21.2	22.0	22.6	23.2	23.8
	4500	17.3	18.2	19.0	19.7	20.3	20.9	21.5
	5000	15.6	16.4	17.2	17.8	18.4	19.0	19.5
	5500	14.2	15.0	15.7	16.3	16.9	17.4	17.9
	6000	13.0	13.8	14.5	15.1	15.6	16.1	16.5

Table 94. Hot gas reheat temperature rise[(a), (b)]

Tons	SCFM	Leaving Evaporator Dry Bulb [°F][(c)]						
		35	40	45	50	55	60	65
15	3000	30.4	31.5	32.5	33.3	34.1	34.9	35.5
	3600	25.4	26.4	27.3	28.1	28.8	29.4	30.0
	4200	21.9	22.8	23.6	24.4	25.1	25.7	26.3
	4800	19.1	20.0	20.8	21.5	22.2	22.7	23.3
	5400	17.0	17.8	18.6	19.2	19.8	20.4	20.9
	6000	15.3	16.1	16.8	17.4	18.0	18.5	19.0
	6600	13.9	14.7	15.3	15.9	16.4	16.9	17.4
	7200	12.7	13.5	14.1	14.7	15.2	15.6	16.1
17½	3500	34.5	37.9	41.5	45.2	48.5	50.6	50.6
	4200	28.0	30.9	33.9	36.8	39.6	42.0	43.8
	4900	23.5	26.0	28.6	31.4	34.0	36.2	37.9
	5600	20.3	22.4	24.7	27.2	29.7	31.9	33.5
	6300	17.9	19.7	21.7	23.8	26.1	28.3	29.9
	7000	16.0	17.5	19.3	21.3	23.4	25.3	26.9
	7700	14.4	15.8	17.4	19.2	21.1	23.0	24.5
	8400	13.2	14.4	15.8	17.4	19.3	21.0	22.5
20	4000	30.5	31.8	33.0	34.0	35.0	35.8	36.6
	4800	25.5	26.7	27.8	28.8	29.6	30.4	31.2
	5600	21.8	23.0	24.0	24.9	25.7	26.4	27.1
	6400	19.1	20.2	21.1	22.0	22.8	23.4	24.1
	7200	17.0	18.0	18.9	19.6	20.3	21.0	21.6
	8000	15.3	16.2	17.1	17.8	18.5	19.1	19.6
	8800	13.9	14.8	15.6	16.3	16.9	17.5	18.0
	9600	12.7	13.6	14.3	15.0	15.6	16.1	16.6
25	5000	25.5	27.3	29.03	30.4	31.7	32.5	32.4
	5800	21.9	23.5	25.1	26.5	27.5	28.4	28.8
	6600	19.2	20.7	22.1	23.4	24.3	25.2	25.7
	7400	17.1	18.4	19.7	20.9	21.7	22.7	23.2
	8000	15.8	17	18.3	19.3	20.3	21.1	21.6
	8800	14.3	15.5	16.6	17.6	18.7	19.2	19.8
	9600	13.1	14.2	15.2	16.2	17.1	17.7	18.3
	10400	12.1	13.1	14	14.9	15.8	16.4	16.9
	11200	11.2	12.1	13	13.9	14.7	15.1	15.8
	12000	10.4	11.2	12.2	13	13.7	14.2	14.8

(a) 70°F OD Ambient Temperature.
(b) For units with the Dehumidification (Hot Gas Reheat) option.
(c) Temperature does not account for indoor fan heat.

Controls

Economizer Controls

The standard equipment offering is a fixed dry bulb changeover control. In addition, there are two optional controls, Enthalpy and Differential Enthalpy Control.

Enthalpy Control

Replaces the dry bulb control with a wet bulb changeover controller which has a fully adjustable setpoint. Enthalpy control offers a higher level of comfort control, along with energy savings potential, than the standard dry bulb control. This is due to the additional wet bulb sensing capability.

Differential Enthalpy Control

Differential Enthalpy replaces the standard dry bulb control with two enthalpy sensors that compare total heat content of the indoor air and outdoor air to determine the most efficient air source. This control option offers the highest level of comfort control, plus energy efficiency, available.

Remote Potentiometer

Minimum position setting of economizer can be remotely adjusted with this accessory.

Zone Sensors

Zone Sensors are the building occupant's comfort control devices. They replace the conventional electro-mechanical thermostats.

Note: *Zone sensor required for units configured for Single Zone VAV indoor fan system control to enable Single Zone VAV functionality.*

Differential Pressure Switches

This factory or field-installed option allows individual fan failure and dirty filter indication. The fan failure switch will disable all unit functions and "flash" the Service LED on the zone sensor. The dirty filter switch will light the Service LED on the zone sensor and will allow continued unit operation.

Manual Changeover

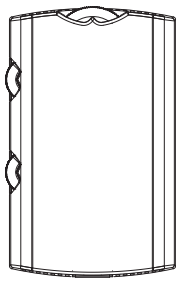

Heat, Cool or Off System Switch. Fan Auto or Off Switch. One temperature setpoint lever.

Manual/Automatic Changeover

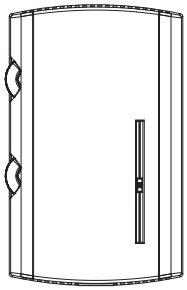

Auto, Heat, Cool or Off System Switch. Fan Auto or Off Switch. Two temperature setpoint levers.

Manual/Automatic Changeover

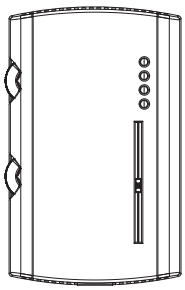

Auto, Heat, Cool or Off System Switch. Fan Auto or Off Switch. Two temperature setpoint levers. Status Indication LED lights, System On, Heat, Cool, or Service.

RA Remote Sensor & Room Remote Sensor

The RA Remote Sensor is a Return Air Remote Sensor which can be mounted in the return air duct to report return air temperature. The Room Remote Sensor is a Space Remote Sensor which can be mounted on the wall to report/control from a remote location in the space.

Wireless Zone Sensor

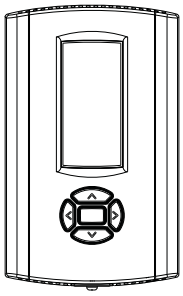

LCD display that provides heat, cool, auto, or off. Includes two temperature setpoints and a lockable setting with °F or °C indicators.

Manual/Automatic Changeover

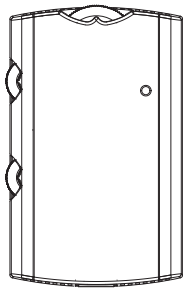

Auto, Heat, Cool or Off System Switch. Fan Auto or Off Switch. Two temperature setpoint levers.

Remote Sensor

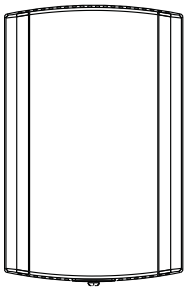

Sensor(s) available for all zone sensors to provide remote sensing capabilities.

Integrated Comfort™ System

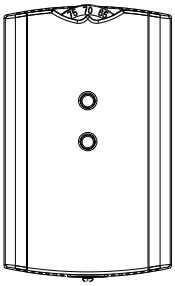

Sensor(s) available with optional temperature adjustment and override buttons to provide central control through a Trane Integrated Comfort™ system.

Programmable Night Setback

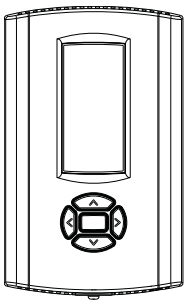

Auto or manual changeover with seven-day programming. Keyboard selection of Heat, Cool, Fan, Auto, or On. All programmable sensors have System On, Heat, Cool, Service LED/indicators as standard. Night Setback Sensors have one (1) Occupied, one (1) Un-occupied, and one (1) Override program per day.

CO_2 Sensor

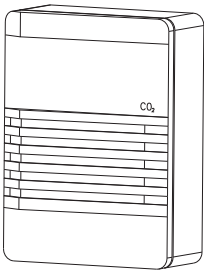

The CO_2 sensor shall have the ability to monitor the concentration (parts per million, ppm) of CO_2 (Carbon Dioxide) in the air. As the CO_2 concentration changes, the outside air damper modulates to meet the current ventilation needs of the zone.

Humidity Sensor

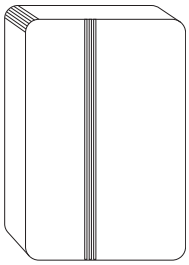

Field installed, wall-mounted or duct-mounted humidity sensor is used to control activation of the hot gas reheat dehumidification option. The humidity sensor can be set for humidity levels between 40 percent and 60 percent relative humidity by adjusting the ReliaTel Options Module.

Digital Display Programmable Thermostat with Built-In Relative Humidity Sensing (3H/2C)

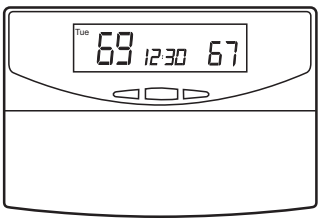

Three Heat/Two Cool digital display thermostat with built-in humidity control and display. This thermostat combines both humidity and dry bulb into one. Fully programmable with night setback.

Digital Display Programmable Thermostat (3H/2C)

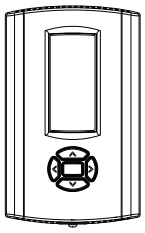

Three Heat/Two Cool auto changeover digital display thermostat. 7-day programmable stat with night setback shall be available.

Touchscreen Programmable Thermostat (2H/2C)

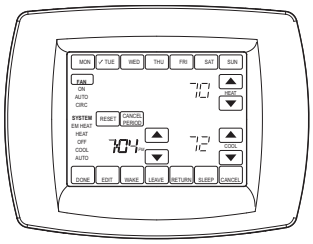

Two Heat/Two Cool programmable thermostat with touch screen digital display. Menu-driven programming. Effortless set-up. Program each day separately with no need to copy multiple days. All programming can be done on one screen. Easy to read and use. Large, clear backlit digital display.

Digital Display Thermostat (3H/2C)

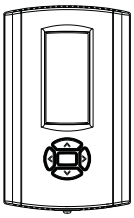

Three Heat, Two Cool auto changeover digital display thermostat.

Communication Interfaces

Air-Fi™ Wireless Communication - Factory Installed

The factory installed Air-Fi Wireless communication allows customers to benefit from reduced installed/labor cost. This factory installed solution comes pre-wired and tested.

BACnet® Communications Interface - Factory or Field Installed

The BACnet communications interface allows the unit to communicate directly with a generic open protocol BACnet MS/TP Network Building Automation System Controls.

LonTalk® Communications Interface - Factory or Field Installed

The LonTalk communications interface allows the unit to communicate as a Tracer™ LCI-V device or directly with generic LonTalk Network Building Automation System Controls.

Trane Communication Interface (TCI) - Factory or Field Installed

This factory or field-installed micro-processor interface allows the unit to communicate with Trane's Integrated Comfort™ system.

Electrical Data

Table 95. Unit wiring with cooling (no electric heat) or gas heat—standard refrigeration system

Tons	Unit Model Number	Unit Operating Voltage Range	Standard Indoor Fan Motor		Oversized Indoor Fan Motor	
			Minimum Circuit Ampacity[a]	Maximum Fuse Size or Maximum Circuit Breaker	Minimum Circuit Ampacity	Maximum Fuse Size or Maximum Circuit Breaker
12½	T/YS*150G3	187–253	61	80	67	90
	T/YS*150G4	414–506	29	40	32	40
	T/YS*150GW	517–633	22	30	24	30
	T/YS*150GK	342–418	36	45	39	50
15	T/YS*180G3	187–253	69	90	75	100
	T/YS*180G4	414–506	34	45	37	50
	T/YS*180GW	517–633	31	40	32	45
	T/YS*180GK	342–418	45	60	47	60
17½	T/YS*210/211G3	187–253	77	100	85	110
	T/YS*210/211G4	414–506	37	50	41	50
	T/YS*210/211GW	517–633	34	45	37	50
	T/YS*210GK	342–418	52	70	56	70
20	T/YS*240G3	187–253	105	125	112	150
	T/YS*240G4	414–506	50	70	54	70
	T/YS*240GW	517–633	43	60	46	60
	T/YS*240GK	342–418	60	80	64	80
25	T/YS*300/301G3	187–253	112	150	—	—
	T/YS*300/301G4	414–506	53	70	—	—
	T/YS*300/301GW	517–633	45	60	—	—
	T/YS*300GK	342–418	69	90	—	—

(a) For Standard and Oversized Indoor Fan Motor, values do not include power exhaust accessory.
* Indicates both downflow and horizontal units.

Table 96. Unit wiring with electric heat (single point connection)—standard refrigeration system (downflow and horizontal)

Tons	Unit Model Number	Heater Model Number[a]	Heater kW Rating	Control Stages	Standard Indoor Motor MCA	Standard Indoor Motor Max Fuse Size or Max Circuit Breaker	Oversized Indoor Motor MCA	Oversized Indoor Motor Max Fuse Size or Max Circuit Breaker[b]
208/230 Volts Three Phase								
12½	TS*150G3	AYDHTRK318/AYHHTRN318	13.5/18.0	1	62/69	80/80	69/77	90/90
		AYDHTRK336/AYHHTRP336	27.0/36.0	2	109/123	110/125	116/131	125/150
		AYDHTRK354/AYHHTRP354	40.5/54.0	2	155/145	175/175	163/152	175/175
15	TS*180G3	AYDHTRK318/AYHHTRN318	13.5/18.0	1	69/69	90/90	75/77	100/100
		AYDHTRK336/AYHHTRM336	27.0/36.0	2	109/123	110/125	116/131	125/150
		AYDHTRK354/AYHHTRM354	40.5/54.0	2	155/145	175/175	163/152	175/175
17½	TS*210/211G3	AYDHTRL336/AYHHTRN336	27.0/36.0	2	116/131	125/150	126/140	150/150
		AYDHTRL354/AYHHTRN354	40.5/54.0	2	163/152	175/175	172/162	175/175
		AYDHTRK372/AYHHTRN372	54.0/72.0	2	172/196	200/225	182/205	200/225
20	TS*240G3	AYDHTRL336/AYHHTRN336	27.0/36.0	2	116/131	125/150	126/140	150/150
		AYDHTRL354/AYHHTRN354	40.5/54.0	2	163/152	175/175	172/162	175/175
		AYDHTRK372/AYHHTRN372	54.0/72.0	2	172/196	200/225	182/205	200/225
25	TS*300/301G3	AYDHTRL336/AYHHTRN336	27.0/36.0	2	126/140	150/150	—	—
		AYDHTRL354/AYHHTRN354	40.5/54.0	2	172/162	175/175	—	—
		AYDHTRK372/AYHHTRN372	54.0/72.0	2	182/205	200/225	—	—
460 Volts Three Phase								
12½	TS*150G4	AYDHTRL418 (AYDHTRK418)[a]/AYHHTRN418	18.0	1	28	30	38	40
		AYDHTRK436/AYHHTRP436	36.0	2	62	70	65	70
		AYDHTRK454/AYHHTRP454	54.0	2	72	90	76	90
15	TS*180G4	AYDHTRL418 (AYDHTRK418)[a]/AYHHTRM418	18.0	1	36	50	39	50
		AYDHTRK436/AYHHTRM436	36.0	2	62	70	65	70
		AYDHTRK454/AYHHTRM454	54.0	2	72	90	76	90
17½	TS*210/211G4	AYDHTRL436/AYHHTRN436	36.0	2	65	70	69	70
		AYDHTRL454/AYHHTRN454	54.0	2	76	90	80	90
		AYDHTRK472/AYHHTRN472	72.0	2	98	110	102	110
20	TS*240G4	AYDHTRL436/AYHHTRN436	36.0	2	65	70	69	70
		AYDHTRL454/AYHHTRN454	54.0	2	76	90	80	90
		AYDHTRK472/AYHHTRN472	72.0	2	98	110	102	110
25	TS*300/301G4	AYDHTRL436/AYHHTRN436	36.0	2	69	70	—	—
		AYDHTRL454/AYHHTRN454	54.0	2	80	90	—	—
		AYDHTRK472/AYHHTRN472	72.0	2	102	110	—	—

Table 96. Unit wiring with electric heat (single point connection)—standard refrigeration system (downflow and horizontal) (continued)

Tons	Unit Model Number	Heater Model Number[a]	Heater kW Rating	Control Stages	Standard Indoor Motor MCA	Standard Indoor Motor Max Fuse Size or Max Circuit Breaker	Oversized Indoor Motor MCA	Oversized Indoor Motor Max Fuse Size or Max Circuit Breaker[b]
575 Volts Three Phase								
12½	TS*150GW	AYDHTRKW18 (AYDHTRLW18)[a]/ AYHHTRNW18	18.0	1	28	30	31	35
		AYDHTRMW36/AYHHTRPW36	36.0	2	50	50	52	60
		AYDHTRKW54/AYHHTRPW54	54.0	2	58	70	61	70
15	TS*180GW	AYDHTRKW18 (AYDHTRMW18)[a]/ AYHHTRMW18 (AYHHTRQW18)	18.0	1	30	45	32	45
		AYDHTRMW36 (AYDHTRKW36)[a]/ AYHHTRMW36 (AYHHTRSW36)	36.0	2	50	50	52	60
		AYDHTRKW54/AYHHTRMW54	54.0	2	58	70	61	70
17½	TS*210/ 211GW	AYDHTRMW36 (AYDHTRLW36)[a]/ AYHHTRMW36 (AYHHTRNW36)	36.0	2	52	60	56	60
		AYDHTRLW54/AYHHTRNW54	54.0	2	61	70	65	70
		AYDHTRKW72/AYHHTRNW72	72.0	2	78	90	82	90
20	TS*240GW	AYDHTRMW36 (AYDHTRLW36)[a]/ AYHHTRMW36 (AYHHTRNW36)	36.0	2	52	60	56	60
		AYDHTRLW54/AYHHTRNW54	54.0	2	61	70	65	70
		AYDHTRKW72/AYHHTRNW72	72.0	2	78	90	82	90
25	TS*300/ 301GW	AYDHTRMW36 (AYDHTRLW36)[a]/ AYHHTRMW36 (AYHHTRNW36)	36.0	2	56	60	—	—
		AYDHTRLW54/AYHHTRNW54	54.0	2	65	70	—	—
		AYDHTRKW72/AYHHTRNW72	72.0	2	82	90	—	—
380 Volts Three Phase								
12½	TS*150GK	AYDHTRL418 (AYDHTRK418)[a] / AYHHTRN418	18.0	2	36	45	—	—
		AYDHTRK436/AYHHTRP436	36.0	2	52	60	—	—
		AYDHTRK454/AYHHTRP454	54.0	2	60	70	—	—
15	TS*180GK	AYDHTRL418 (AYDHTRK418)[a] / AYHHTRM418	18.0	2	44	60	—	—
		AYDTRK436/AYHHTRM436	36.0	2	52	60	—	—
		AYDTRK454/AYHHTRM454	54.0	2	60	70	—	—
17½	TS*210GK	AYDHTRL436/AYHHTRN436	36.0	2	56	70	—	—
		AYDHTRL454/AYHHTRN454	54.0	2	64	70	—	—
20	TS*240GK	AYDHTRL436/AYHHTRN436	36.0	2	60	80	—	—
		AYDHTRL454/AYHHTRN454	54.0	2	64	80	—	—
		AYDHTRK472/AYHHTRN472	72.0	2	82	90	—	—
25	TS*300GK	AYDHTRL436/AYHHTRN436	36.0	2	69	90	—	—
		AYDHTRL454/AYHHTRN454	54.0	2	70	90	—	—
		AYDHTRK472/AYHHTRN472	72.0	2	87	90	—	—

(a) Heater model numbers in parenthesis apply to units with an optional high SCCR rating.
(b) Values do not include power exhaust accessory.
* Indicates both downflow and horizontal units.

Table 97. Electrical characteristics—compressor motor and condenser motor—60 cycle—standard efficiency

Tons	Unit Model No.	No.	Compressor Motors						Condenser Fan Motors				
							Amps[a]					Amps[a]	
			Volts	Phase	hp[b]	rpm	RLA	LRA	No.	Phase	hp	FLA	LRA
12½	T/YS*150G3	2	208–230	3	6.9/3.5	3450	25/13.7	164/83.1	2	3	0.5	2.7	9.65
	T/YS*150G4	2	460	3	6.9/3.5	3450	12.2/6.2	100/41	2	3	0.5	1.35	4.82
	T/YS*150GW	2	575	3	6.9/3.5	3450	9.0/4.8	78/33	2	3	0.5	0.8	3.40
	T/YS*150GK	2	380	3	6.9/3.5	3450	13.9/8.1	94.3/56	2	3	0.5	1.2	4.10
15	T/YS*180G3	2	208–230	3	9.2/4.5	3450	29.4/15.6	267/110	2	3	0.5	2.7	9.65
	T/YS*180G4	2	460	3	9.2/4.5	3450	14.7/7.7	142/52	2	3	0.5	1.35	4.82
	T/YS*180GW	2	575	3	9.2/4.5	3450	14.7/5.8	103/38.9	2	3	0.5	0.8	3.40
	T/YS*180GK	2	380	3	9.2/4.5	3450	16.6/10.1	160/65.6	2	3	0.5	1.2	4.10
17½	T/YS*210/211G3	2	208–230	3	9.2/4.5	3450	29.4/15.6	267/110	2	3	1.0	3.8	16.42
	T/YS*210/211G4	2	460	3	9.2/4.5	3450	14.7/7.7	142/52	2	3	1.0	1.8	7.7
	T/YS*210/211GW	2	575	3	9.2/4.5	3450	14.7/5.8	103/38	2	3	1.0	1.84	7.4
	T/YS*210GK	2	380	3	9.2/4.5	3450	16.6/10.1	160/65.6	2	3	0.5	2.1	9.06
20	T/YS*240G3	2	208–230	3	12.9/6.3	3450	44.2/25	315/164	2	3	1.0	3.8	16.42
	T/YS*240G4	2	460	3	12.9/6.3	3450	21.1/12.8	158/100	2	3	1.0	1.8	7.7
	T/YS*240GW	2	575	3	12.9/6.3	3450	18.6/9.6	136/78	2	3	1.0	1.84	7.4
	T/YS*240GK	2	380	3	12.9/6.3	3450	23/12.5	177/94.3	2	3	0.5	2.1	9.06
25	T/YS*300/301G3	2	208–230	3	13.4/6.9	3450	44.2/25	315/164	2	3	1.0	3.8	16.42
	T/YS*300/301G4	2	460	3	13.4/6.9	3450	21.1/12.2	158/100	2	3	1.0	1.8	7.7
	T/YS*300/301GW	2	575	3	13.4/6.9	3450	18.6/9	136/78	2	3	1.0	1.84	7.4
	T/YS*300GK	2	380	3	13.4/6.9	3450	23.7/13.9	177/94.3	2	3	0.5	2.1	9.06

(a) For Compressor Motors and Condenser Fan Motors: Amp draw for each motor; multiply value by number of motors to determine total amps.
(b) Horsepower for each compressor.
*Indicates both downflow and horizontal units.

Table 98. Electrical characteristics—evaporator fan motor—60 cycle—standard and oversized

Tons	Unit Model Number	Standard Evaporator Fan Motor						Oversized Evaporator Fan Motor					
						Amps[b]						Amps	
		No.	Volts	Phase	hp[a]	FLA	LRA	No.	Volts	Phase	hp	FLA	LRA
12½	T/YS*150G3	1	208–230	3	3.00	10.6	81.0	1	208–230	3	5.00	16.7	109.8
	T/YS*150G4	1	460	3	3.00	4.8	40.5	1	460	3	5.00	7.6	54.9
	T/YS*150GW	1	575	3	3.00	3.9	31.0	1	575	3	5.00	6.1	41.6
	T/YS*150GK	1	380	3	5.00	9.2	66.5	1	—	—	—	—	—
15	T/YS*180G3	1	208–230	3	3.00	10.6	81.0	1	208–230	3	5.00	16.7	109.8
	T/YS*180G4	1	460	3	3.00	4.8	40.5	1	460	3	5.00	7.6	54.9
	T/YS*180GW	1	575	3	3.00	3.9	31.0	1	575	3	5.00	6.1	41.6
	T/YS*180GK	1	380	3	5.00	9.2	66.5	1	—	—	—	—	—
17½	T/YS*210/211G3	1	208–230	3	5.00	16.7	109.8	1	208–230	3	7.50	24.2	120.4
	T/YS*210/2114	1	460	3	5.00	7.6	54.9	1	460	3	7.50	11.0	74.0
	T/YS*210/211W	1	575	3	5.00	6.1	41.6	1	575	3	7.50	9.0	60.0
	T/YS*210GK	1	380	3	7.50	13.3	83.5	1	—	—	—	—	—
20	T/YS*240G3	1	208–230	3	5.00	16.7	109.8	1	208–230	3	7.50	24.2	120.4
	T/YS*240G4	1	460	3	5.00	7.6	54.9	1	460	3	7.50	11.0	74.0
	T/YS*240GW	1	575	3	5.00	6.1	41.6	1	575	3	7.50	9.0	60.0
	T/YS*240GK	1	380	3	7.50	13.3	83.5	1	—	—	—	—	—
25	T/YS*300/301G3	1	208–230	3	7.50	24.2	120.4	—	—	—	—	—	—
	T/YS*300/301G4	1	460	3	7.50	11.0	74.0	—	—	—	—	—	—
	T/YS*300/301GW	1	575	3	7.50	9.0	60	—	—	—	—	—	—
	T/YS*300GK	1	380	3	7.50	13.3	83.5	—	—	—	—	—	—

(a) Horsepower for each compressor.
* Indicates downflow and horizontal units.
(b) For Compressor Motors and Condenser Fan Motors: Amp draw for each motor; multiply value by number of motors to determine total amps.

Table 99. Electrical characteristics—power exhaust (cooling and gas/electric)

Tons	Volts	Phase	hp	rpm	Amps	
					FLA	LRA
12½–25	208–230	1	3/4	1040	6.6	13.5
	460	1	3/4	1040	3.2	8.4
	575	1	3/4	1040	2.1	5.2

Table 100. Unit wiring with cooling (no electric heat) or gas heat—high efficiency

Tons	Unit Model Number	Unit Operating Voltage Range	Standard Indoor Fan Motor		Oversized Indoor Fan Motor	
			Minimum Circuit Ampacity[a]	Maximum Fuse Size or Maximum Circuit Breaker	Minimum Circuit Ampacity	Maximum Fuse Size or Maximum Circuit Breaker
12½	T/YH*150G3	187–253	64	90	71	90
	T/YH*150G4	414–506	30	40	33	45
	T/YH*150GW	517–633	23	30	25	35
15	T/YH*180G3	187–253	68	90	74	100
	T/YH*180G4	414–506	33	45	36	50
	T/YH*180GW	517–633	25	35	27	35
17½	T/YH*210G3	187–253	83	110	91	110
	T/YH*210G4	414–506	41	50	44	60
	T/YH*210GW	517–633	33	45	36	45
20	T/YH*240G3	187–253	96	125	103	125
	T/YH*240G4	414–506	44	60	48	60
	T/YH*240GW	517–633	38	50	41	50
25	T/YH*300G3	187–253	117	150	N/A	N/A
	T/YH*300G4	414–506	54	70	N/A	N/A
	T/YH*300GW	517–633	44	50	N/A	N/A

(a) For Standard and Oversized Indoor Fan Motor, values do not include power exhaust accessory.
* Indicates both downflow and horizontal units.

Table 101. Unit wiring with cooling (no electric heat) or gas heat—dehumidification (hot gas reheat) option (downflow only)

Tons	Unit Model Number	Unit Operating Voltage Range	Standard Indoor Fan Motor		Oversized Indoor Fan Motor	
			Minimum Circuit Ampacity[a]	Maximum Fuse Size or Maximum Circuit Breaker	Minimum Circuit Ampacity	Maximum Fuse Size or Maximum Circuit Breaker
12½	T/YHD150G3	187–253	67	80	73	90
	T/YHD150G4	414–506	32	40	35	40
	T/YHD150GW	517–633	23	30	26	30
15	T/YHD180G3	187–253	73	90	79	100
	T/YHD180G4	414–506	35	45	38	45
	T/YHD180GW	517–633	27	35	29	35
17½	T/YHD210G3	187-253	84	110	92	110
	T/YHD210G4	414-506	41	50	45	50
	T/YHD210GW	517-633	34	45	37	45
20	T/YHD240G3	187–253	113	150	120	150
	T/YHD240G4	414–506	53	70	57	70
	T/YHD240GW	517–633	45	50	48	60
25	T/YHD300G3	187–253	115	150	-	-
	T/YHD300G4	414–506	54	70	-	-
	T/YHD300GW	517–633	42	50	-	-

(a) For Standard and Oversized Indoor Fan Motor, values do not include power exhaust accessory.

Table 102. Unit wiring with electric heat (single point connection)—high efficiency

Tons	Unit Model Number	Heater Model Number[a]	Heater kW Rating	Control Stages	Standard Indoor Motor MCA	Standard Indoor Motor Max Fuse Size or Max Circuit Breaker	Oversized Indoor Motor MCA	Oversized Indoor Motor Max Fuse Size or Max Circuit Breaker[b]
208/230 Volts Three Phase								
12½	TH*150G3	AYDHTRK318/AYHHTRM318	13.5/18.0	1	64/69	90/90	71/77	90/90
		AYDHTRK336/AYHHTRM336	27.0/36.0	2	109/123	110/125	116/131	125/150
		AYDHTRK354/AYHHTRM354	40.5/54.0	2	155/145	175/175	163/152	175/175
15	TH*180G3	AYDHTRK318/AYHHTRM318	13.5/18.0	1	68/69	90/90	74/77	100/100
		AYDHTRK336/AYHHTRM336	27.0/36.0	2	109/123	110/125	116/131	125/150
		AYDHTRK354/AYHHTRM354	40.5/54.0	2	155/145	175/175	163/152	175/175
17½	TH*210G3	AYDHTRL336/AYHHTRN336	27.0/36.0	2	116/131	125/150	126/140	150/150
		AYDHTRL354/AYHHTRN354	40.5/54.0	2	163/152	175/175	172/162	175/175
		AYDHTRK372/AYHHTRN372	54.0/72.0	2	172/196	200/225	182/205	200/225
20	TH*240G3	AYDHTRL336/AYHHTRN336	27.0/36.0	2	116/131	125/150	126/140	150/150
		AYDHTRL354/AYHHTRN354	40.5/54.0	2	163/152	175/175	172/162	175/175
		AYDHTRK372/AYHHTRN372	54.0/72.0	2	172/196	200/225	182/205	200/225
25	TH*300G3	AYDHTRL336/AYHHTRN336	27.0/36.0	2	126/140	150/150	—	—
		AYDHTRL354/AYHHTRN354	40.5/54.0	2	172/162	175/175	—	—
		AYDHTRK372/AYHHTRN372	54.0/72.0	2	182/205	200/225	—	—
460 Volts Three Phase								
12½	TH*150G4	AYDHTRL418 (AYDHTRK418)[a] / AYHHTRM418	18.0	1	35	40	38	45
		AYDHTRK436/AYHHTRM436	36.0	2	62	70	65	70
		AYDHTRK454/AYHHTRM454	54.0	2	72	90	76	90
15	TH*180G4	AYDHTRL418 (AYDHTRK418)[a] / AYHHTRM418	18.0	1	35	45	38	50
	THD180G4	AYDHTRK427	27.0	2	48	50	52	60
	TH*180G4	AYDHTRK436/AYHHTRM436	36.0	2	62	70	65	70
		AYDHTRK454/AYHHTRM454	54.0	2	72	90	76	90
17½	THD210G4	AYDHTRL427	27.0	2	52	60	56	60
	TH*210G4	AYDHTRL436/AYHHTRN436	36.0	2	65	70	69	70
		AYDHTRL454/AYHHTRN454	54.0	2	76	90	80	90
		AYDHTRK472/AYHHTRN472	72.0	2	98	110	102	110
20	THD240G4	AYDHTRL427	27.0	2	52	60	56	60
	TH*240G4	AYDHTRL436/AYHHTRN436	36.0	2	65	70	69	70
		AYDHTRL454/AYHHTRN454	54.0	2	76	90	80	90
		AYDHTRK472/AYHHTRN472	72.0	2	98	110	102	110
25	THD300G4	AYDHTRL427	27.0	2	56	70	—	—
	TH*300G4	AYDHTRL436/AYHHTRN436	36.0	2	69	70	—	—
		AYDHTRL454/AYHHTRN454	54.0	2	80	90	—	—
		AYDHTRK472/AYHHTRN472	72.0	2	102	110	—	—

Table 102. Unit wiring with electric heat (single point connection)—high efficiency

Tons	Unit Model Number	Heater Model Number[a]	Heater kW Rating	Control Stages	Standard Indoor Motor		Oversized Indoor Motor	
					MCA	Max Fuse Size or Max Circuit Breaker	MCA	Max Fuse Size or Max Circuit Breaker[b]
575 Volts Three Phase								
12½	TH*150GW	AYDHTRKW18 (AYDHTRLW18)[a] / AYHHTRMW18 (AYHHTRPW18)	18.0	1	28	30	31	35
		AYDHTRMW36/AYHHTRMW36 (AYHHTRRW36)	36.0	2	50	50	52	60
		AYDHTRKW54/AYHHTRMW54	54.0	2	58	70	61	70
15	TH*180GW	AYDHTRKW18 (AYDHTRMW18)[a]/ AYHHTRMW18 (AYHHTRQW18)	18.0	1	28	35	31	35
		AYDHTRMW36 (AYDHTRKW36)[a] / AYHHTRMW36 (AYHHTRSW36)	36.0	2	50	50	52	60
		AYDHTRKW54/AYHHTRMW54	54.0	2	58	70	61	70
17½	TH*210GW	AYDHTRMW36 (AYDHTRLW36)[a] / AYHHTRMW36 (AYHHTRNW36)	36.0	2	52	60	56	60
		AYDHTRLW54/AYHHTRNW54	54.0	2	61	70	65	70
		AYDHTRKW72/AYHHTRNW72	72.0	2	78	90	82	90
20	TH*240GW	AYDHTRMW36 (AYDHTRLW36)[a] / AYHHTRMW36 (AYHHTRNW36)	36.0	2	52	60	56	60
		AYDHTRLW54/AYHHTRNW54	54.0	2	61	70	65	70
		AYDHTRKW72/AYHHTRNW72	72.0	2	78	90	82	90
25	TH*300GW	AYDHTRMW36 (AYDHTRLW36)[a] / AYHHTRMW36 (AYHHTRNW36)	36.0	2	56	60	—	—
		AYDHTRLW54/AYHHTRNW54	54.0	2	65	70	—	—
		AYDHTRKW72/AYHHTRNW72	72.0	2	82	90	—	—

(a) Heater model numbers in parenthesis apply to units with an optional high SCCR rating.
(b) Values do not include power exhaust accessory.
* Indicates both downflow and horizontal units.

Table 103. Unit wiring with electric heat (single point connection)—dehumidification (hot gas reheat) refrigeration system (downflow only)

Tons	Unit Model Number	Heater Model Number[a]	Heater kW Rating	Control Stages	Standard Indoor Motor MCA	Standard Indoor Motor Max Fuse Size or Max Circuit Breaker	Oversized Indoor Motor MCA	Oversized Indoor Motor Max Fuse Size or Max Circuit Breaker[b]
208/230 Volts Three Phase								
12½	THD150G3	AYDHTRK318	13.5/18.0	1	67/69	80/80	73/77	90/90
		AYDHTRK336	27.0/36.0	2	109/123	110/125	116/131	125/150
		AYDHTRK354	40.5/54.0	2	155/145	175/150	163/152	175/175
15	THD180G3	AYDHTRK318	13.5/18.0	1	73/73	90/90	79/79	100/100
		AYDHTRK336	27.0/36.0	2	109/123	110/125	116/131	125/150
		AYDHTRK354	40.5/54.0	2	155/145	175/175	163/152	175/175
17½	THD210G3	AYDHTRL336 / AYHHTRN336	27.0/36.0	2	116/131	125/150	126/140	150/150
		AYDHTRL354/ AYHHTRN354	40.5/54.0	2	163/152	175/175	172/162	175/175
		AYDHTRK372/ AYHHTRN372	54.0/72.0	2	172/196	200/225	182/205	200/225
20	THD240G3	AYDHTRL336	27.0/36.0	2	116/131	125/150	126/140	150/150
		AYDHTRL354	40.5/54.0	2	163/152	175/175	172/162	175/175
		AYDHTRK372	54.0/72.0	2	172/196	200/225	182/205	200/225
25	THD300G3	AYDHTRL336	27.0/36.0	2	126/140	150/150	-	-
		AYDHTRL354	40.5/54.0	2	172/162	175/175	-	-
		AYDHTRL372	54.0/72.0	2	182/205	200/225	-	-
460 Volts Three Phase								
12½	THD150G4	AYDHTRL418 (AYDHTRK418)[a]	18.0	1	35	40	38	40
		AYDHTRK436	36.0	2	62	70	65	70
		AYDHTRK454	54.0	2	72	90	76	90
15	THD180G4	AYDHTRL418 (AYDHTRK418)[a]	18.0	1	35	45	38	45
		AYDHTRK427	27.0	2	48	50	52	60
		AYDHTRK436	36.0	2	62	70	65	70
		AYDHTRK454	54.0	2	72	90	76	90
17½	THD210G4	AYDHTRL427	27.0	2	52	60	56	60
		AYDHTRL436 / AYHHTRN436	36.0	2	65	70	69	70
		AYDHTRL454/ AYHHTRN454	54.0	2	76	90	80	90
		AYDHTRK472/ AYHHTRN472	72.0	2	98	110	102	110
20	THD240G4	AYDHTRL427	27.0	2	53	70	57	70
		AYDHTRL436	36.0	2	65	70	69	70
		AYDHTRL454	54.0	2	76	90	80	90
		AYDHTRK472	72.0	2	98	110	102	110
25	THD300G4	AYDHTRL427	27.0	2	56	70	-	-
		AYDHTRL436	36.0	2	69	70	-	-
		AYDHTRL454	54.0	2	80	90	-	-
		AYDHTRK472	72.0	2	102	110	-	-

Table 103. Unit wiring with electric heat (single point connection)—dehumidification (hot gas reheat) refrigeration system (downflow only)

Tons	Unit Model Number	Heater Model Number[a]	Heater kW Rating	Control Stages	Standard Indoor Motor MCA	Standard Indoor Motor Max Fuse Size or Max Circuit Breaker	Oversized Indoor Motor MCA	Oversized Indoor Motor Max Fuse Size or Max Circuit Breaker[b]
575 Volts Three Phase								
12½	THD150GW	AYDHTRKW18 (AYDHTRLW18)[a]	18.0	1	28	30	31	35
		AYDHTRMW36	36.0	2	50	50	52	60
		AYDHTRKW54	54.0	2	58	70	61	70
15	THD180GW	AYDHTRKW18 (AYDHTRMW18)[a]	18.0	1	28	35	31	35
		AYDHTRMW36 (AYDHTRKW36)[a]	36.0	2	50	50	52	60
		AYDHTRKW54	54.0	2	58	70	61	70
17½	THD210GW	AYDHTRLW36 / AYHHTRNW36	36.0	2	52	60	56	60
		AYDHTRLW54/ AYHHTRNW54	54.0	2	61	70	65	70
		AYDHTRKW72/ AYHHTRNW72	72.0	2	78	90	82	90
20	THD240GW	AYDHTRMW36 (AYDHTRLW36)[a]	36.0	2	52	60	56	60
		AYDHTRLW54	54.0	2	61	70	65	70
		AYDHTRKW72	72.0	2	78	90	82	90
25	THD300GW	AYDHTRL336	36.0	2	56	60	-	-
		AYDHTRL354	54.0	2	65	70	-	-
		AYDHTRK372	72.0	2	82	90	-	-

(a) Heater model numbers in parenthesis apply to units with an optional high SCCR rating.
(b) Values do not include power exhaust accessory.

Table 104. Electrical characteristics—compressor motor and condenser motor—60 cycle—high efficiency

Tons	Unit Model No.	No.	Compressor Motors Volts	Phase	hp[b]	rpm	Amps[a] RLA	Amps[a] LRA	Condenser Fan Motors No.	Phase	hp	Amps[a] FLA	Amps[a] LRA
12½	T/YH*150G3	2	208–230	3	5.6/3.67	3450	27.5/13.6	191/100	2	3	0.5	2.7	9.65
	T/YH*150G4	2	460	3	5.6/3.67	3450	12.8/6.1	100/41	2	3	0.5	1.35	4.82
	T/YH*150GW	2	575	3	5.6/3.67	3450	10.38/4.2	78/33	2	3	0.5	0.8	3.40
15	T/YH*180G3	2	208–230	3	7.5/4.75	3450	28.3/15.9	240/110	2	3	0.5	2.7	9.65
	T/YH*180G4	2	460	3	7.5/4.75	3450	14.7/7.0	130/52	2	3	0.5	1.35	4.82
	T/YH*180GW	2	575	3	7.5/4.75	3450	11.3/5.1	93.7/39.5	2	3	0.5	0.8	3.40
17½	T/YH*210G3	2	208–230	3	8.6/4.75	3450	34.1/15.6	240/110	2	3	1.0	3.8	16.42
	T/YH*210G4	2	460	3	8.6/4.75	3450	17.3/7.7	140/52	2	3	1.0	1.8	7.7
	T/YH*210GW	2	575	3	8.6/4.75	3450	13.32/5.8	107.6/38.9	2	3	1.0	1.84	7.4
20	T/YH*240G3	2	208–230	3	11.7/6.9	3450	41.0/19.6	304/136	2	3	1.0	3.8	16.42
	T/YH*240G4	2	460	3	11.7/6.9	3450	19.75/8.2	147/66.1	2	3	1.0	1.8	7.7
	T/YH*240GW	2	575	3	11.7/6.9	3450	16.7/6.6	122/55.3	2	3	1.0	1.84	7.4
25	T/YH*300G3	3	208–230	3	12.8/6.9	3450	19.6/19.6/36.63	136/136/240	2	3	1.0	3.8	16.42
	T/YH*300G4	3	460	3	12.8/6.9	3450	8.2/8.2/18.26	66.1/66.1/140	2	3	1.0	1.8	7.7
	T/YH*300GW	3	575	3	12.8/6.9	3450	6.6/6.6/14.06	55.3/55.3/107.6	2	3	1.0	1.84	7.4

(a) For Compressor Motors and Condenser Fan Motors: Amp draw for each motor; multiply value by number of motors to determine total amps.
(b) Horsepower for each compressor.
*Indicates both downflow and horizontal units.

Table 105. Electrical characteristics—compressor motor and condenser motor—60 cycle—dehumidification (hot gas reheat) option (downflow only)

			Compressor Motors						Condenser Fan Motors				
							Amps[a]					Amps[a]	
Tons	Unit Model No.	No.	Volts	Phase	hp[b]	rpm	RLA	LRA	No.	Phase	hp	FLA	LRA
12½	T/YHD150G3	2	208–230	3	5.6	3450	22.4/22.4	149/149	2	3	0.5	2.7	9.65
	T/YHD150G4	2	460	3	5.6	3450	10.6/10.6	75/75	2	3	0.5	1.35	4.82
	T/YHD150GW	2	575	3	5.6	3450	7.7/7.7	54/54	2	3	0.5	0.8	3.40
15	T/YHD180G3	2	208–230	3	6.9	3450	26.2/26.2	149/149	2	3	0.5	2.7	9.65
	T/YHD180G4	2	460	3	6.9	3450	13.2/13.2	75/75	2	3	0.5	1.35	4.82
	T/YHD180GW	2	575	3	6.9	3450	11.5/11.5	54/54	2	3	0.5	0.8	3.40
17½	T/YHD210G3	2	208-230	3	7.5 / 6.9	3450	27.6 / 26.2	203 / 164	2	3	1.0	3.8	16.42
	T/YHD210G4	2	460	3	7.5 / 6.9	3450	14.1 / 13.2	98 / 100	2	3	1.0	1.8	7.7
	T/YHD210GW	2	575	3	7.5 / 6.9	3450	11.6 / 11.5	84 / 78	2	3	1.0	1.84	7.4
20	T/YHD240G3	2	208–230	3	10	3450	39.1/39.1	267/267	2	3	1.0	3.8	16.42
	T/YHD240G4	2	460	3	10	3450	18.6/18.6	142/142	2	3	1.0	1.8	7.7
	T/YHD240GW	2	575	3	10	3450	15.4/15.4	103/103	2	3	1.0	1.84	7.4
25	T/YHD300G3	2	208–230	3	10	3450	36.6/36.6	240/240	2	3	1.0	3.8	16.42
	T/YHD300G4	2	460	3	10	3450	17.2/17.8	140/140	2	3	1.0	1.8	7.7
	T/YHD300GW	2	575	3	10	3450	12.9/12.9	108/108	2	3	1.0	1.84	7.4

(a) For Compressor Motors and Condenser Fan Motors: Amp draw for each motor; multiply value by number of motors to determine total amps.
(b) Horsepower for each compressor.

Table 106. Electrical characteristics—evaporator fan motor—60 cycle—standard and oversized

		Standard Evaporator Fan Motor						Oversized Evaporator Fan Motor					
						Amps[b]						Amps	
Tons	Unit Model Number	No.	Volts	Phase	hp[a]	FLA	LRA	No.	Volts	Phase	hp	FLA	LRA
12½	T/YH*150G3	1	208–230	3	3	10.6	81	1	208–230	3	5	16.7	109.8
	T/YH*150G4	1	460	3	3	4.8	40.5	1	460	3	5	7.6	54.9
	T/YH*150GW	1	575	3	3	3.9	31	1	575	3	5	6.1	41.6
15	T/YH*180G3	1	208–230	3	3	10.6	81	1	208–230	3	5	16.7	109.8
	T/YH*180G4	1	460	3	3	4.8	40.5	1	460	3	5	7.6	54.9
	T/YH*180GW	1	575	3	3	3.9	31	1	575	3	5	6.1	41.6
17½	T/YH*210G3	1	208–230	3	5	16.7	109.8	1	208–230	3	7.5	24.2	120.4
	T/YH*210G4	1	460	3	5	7.6	54.9	1	460	3	7.5	11	74
	T/YH*210GW	1	575	3	5	6.1	41.6	1	575	3	7.5	9	60
20	T/YH*240G3	1	208–230	3	5	16.7	109.8	1	208–230	3	7.5	24.2	120.4
	T/YH*240G4	1	460	3	5	7.6	54.9	1	460	3	7.5	11	74
	T/YH*240GW	1	575	3	5	6.1	41.6	1	575	3	7.5	9	60
25	T/YH*300G3	1	208–230	3	7.5	24.2	120.4	—	—	—	—	—	—
	T/YH*300G4	1	460	3	7.5	11	74	—	—	—	—	—	—
	T/YH*300GW	1	575	3	7.5	9	60	—	—	—	—	—	—

(a) Horsepower for each compressor.
*Indicates both downflow and horizontal units.
(b) For Compressor Motors and Condenser Fan Motors: Amp draw for each motor; multiply value by number of motors to determine total amps.

Table 107. Electrical characteristics—power exhaust (cooling and gas/electric)

Tons	Volts	Phase	hp	rpm	Amps	
					FLA	LRA
12½–25	208–230	1	3/4	1040	6.6	13.5
	460	1	3/4	1040	3.2	8.4
	575	1	3/4	1040	2.1	5.2

Jobsite Connections

Table 108. Typical number of wires

Zone Sensors		
A	Manual Changeover.....	4
	Manual/Auto Changeover.....	5
	Manual/Auto Changeover with Status Indication LEDs.....	10
	Programmable Night Setback with Status Indication LEDs.....	7
Thermostats		
B	3 Power Wires + 1 Ground Wire (three phase)	
	2 Power Wires + 1 Ground Wire (single phase)	

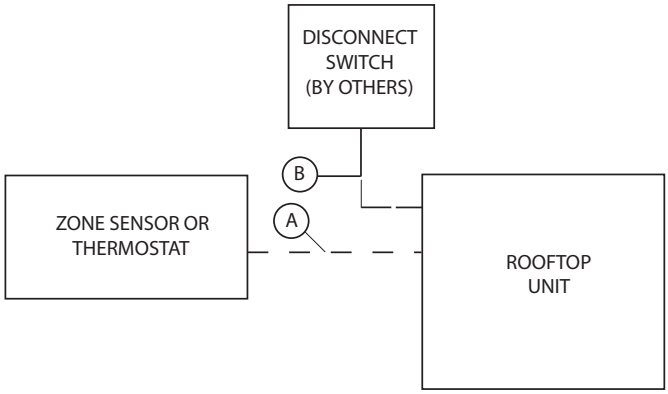

Notes:

- *For specific wiring information, see the installation instructions.*
- *All wiring except power wire is low voltage.*
- *All customer supplied wiring to be copper and must conform to applicable electrical codes and local electric codes. Wiring shown dotted is to be furnished and installed by the customer.*
- *Zone sensors are required for units configured for Single Zone VAV indoor fan system control in order to enable Single Zone VAV functionality.*

Dimensional Data

Figure 1. Cooling with optional electric heat and gas/electric models—12½ tons standard efficiency

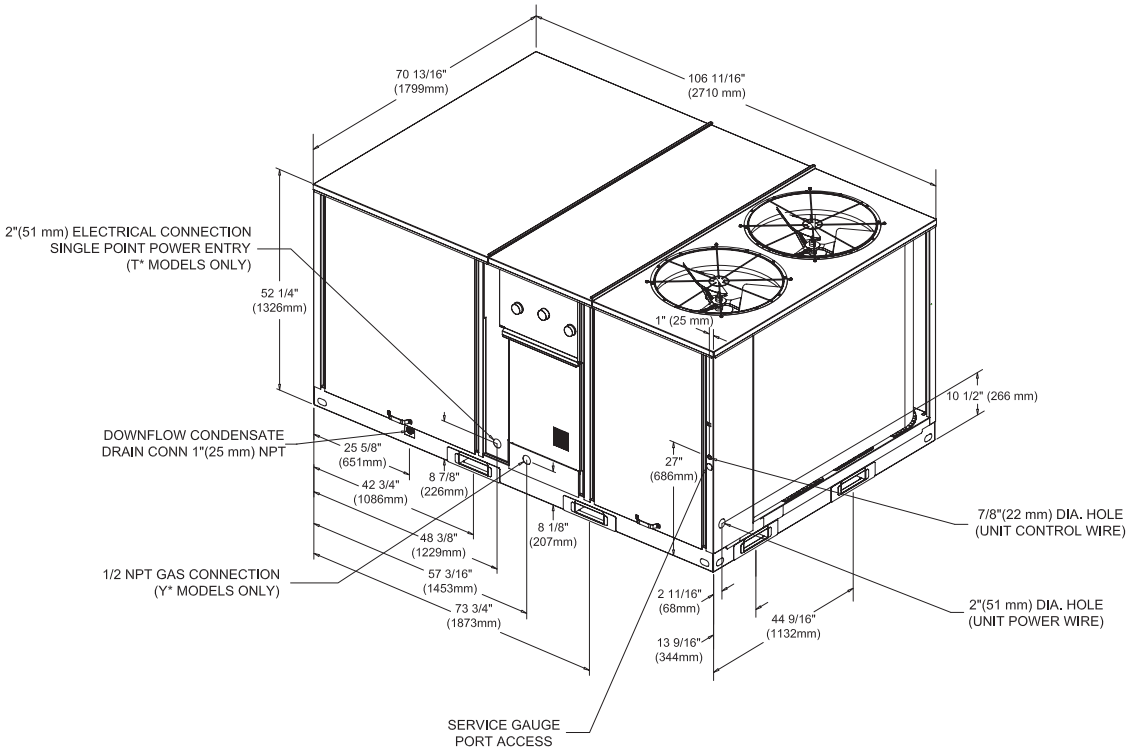

Figure 2. Cooling with optional electric heat and gas/electric models—12½ tons standard efficiency horizontal unit clearance

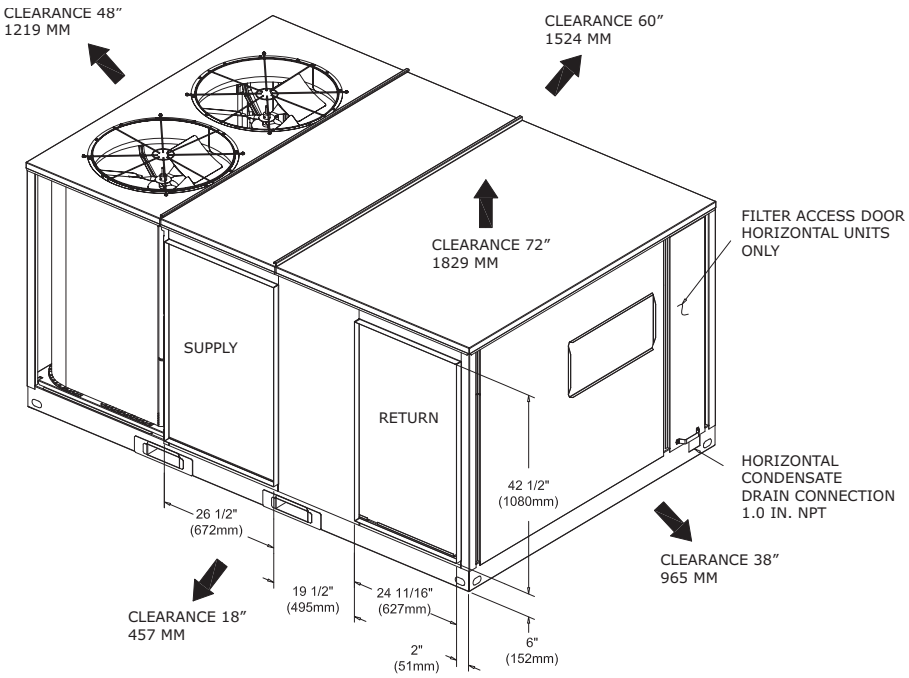

Figure 3. Cooling with optional electric heat and gas/electric models 12½ tons standard efficiency—roof curb

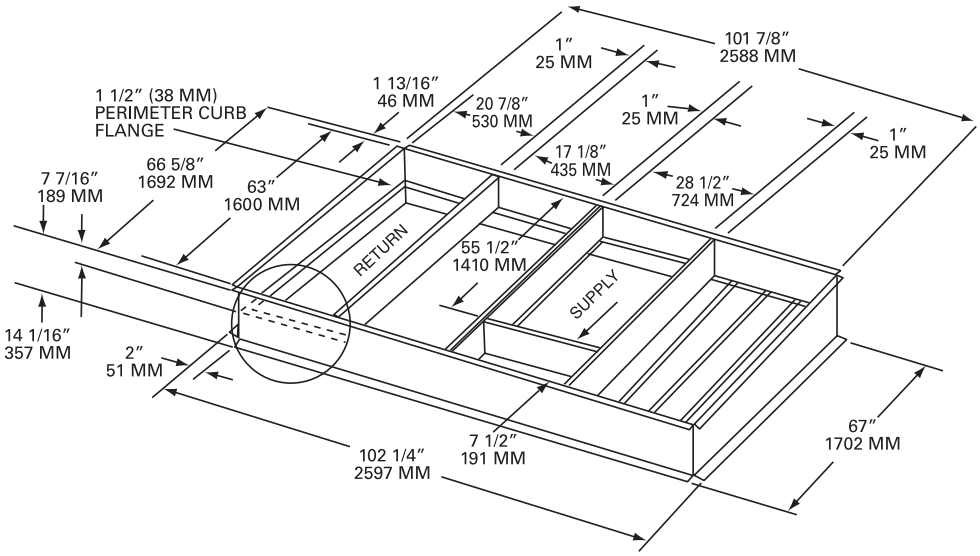

Figure 4. Cooling with optional electric heat and gas/electric models 12½ tons standard efficiency—downflow duct connections—field fabricated

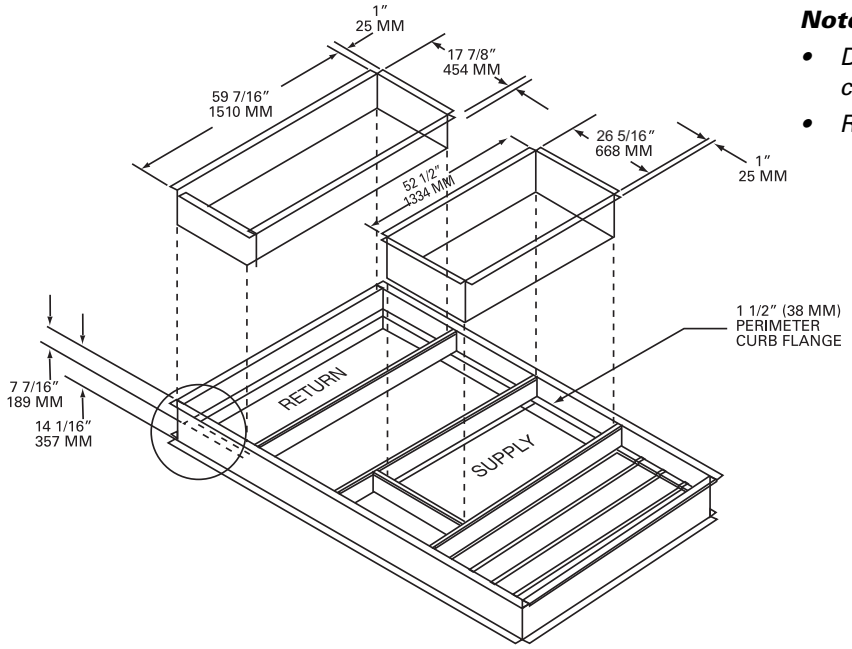

Notes:

- *Duct flanges mount 7-7/16″ down inside the curb on the 1-1½″ curb flanges.*
- *Roofcurb is intended for downflow use only.*

Figure 5. Cooling with optional electric heat and gas/electric models—12½ tons standard efficiency—downflow unit supply/return and unit clearance

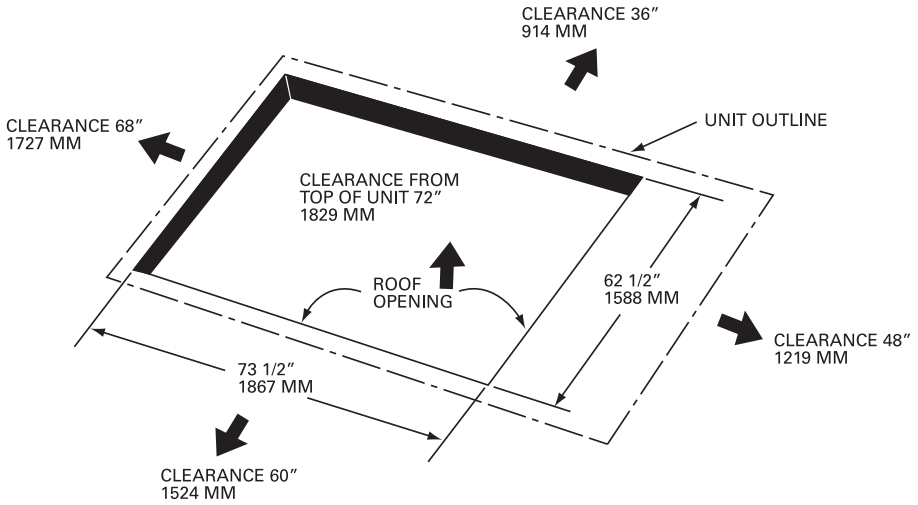

Figure 6. Cooling with optional electric heat and gas/electric models—15–25 tons standard efficiency & 12.5 ton high efficiency

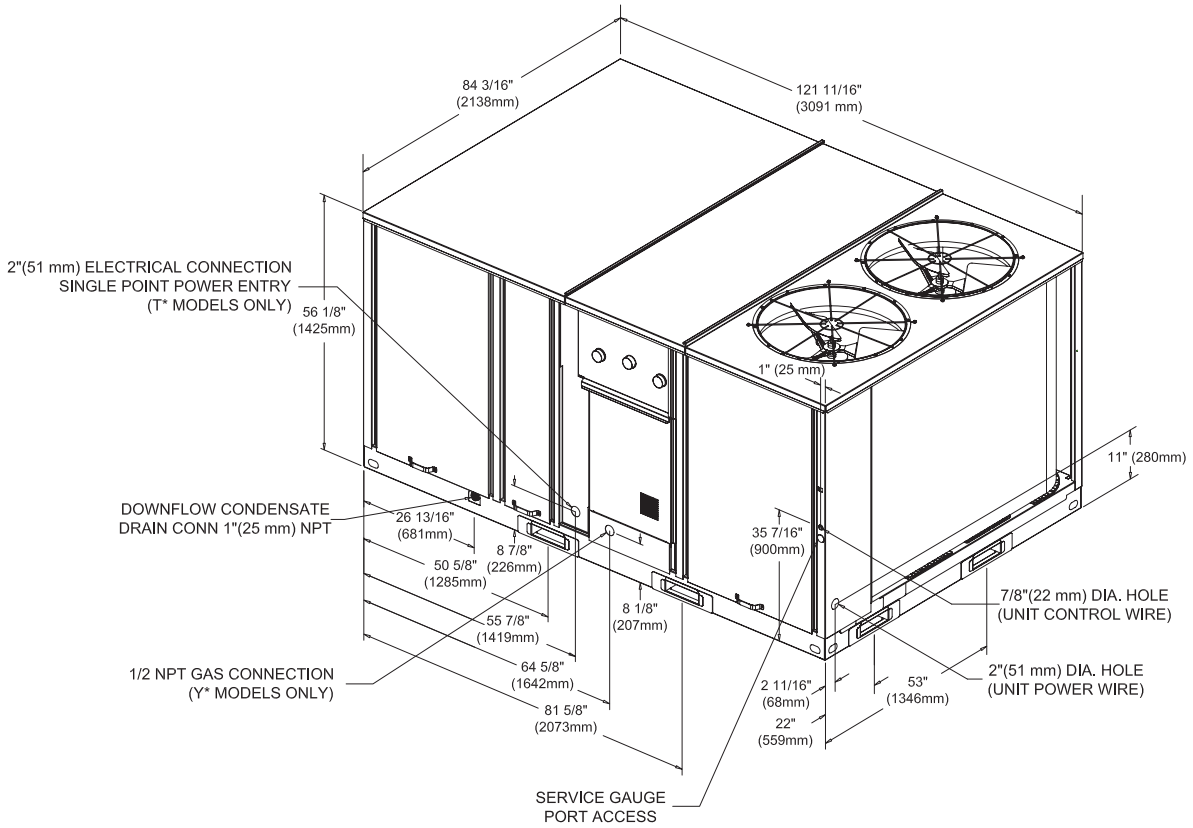

Figure 7. Cooling with optional electric heat and gas/electric models—15–25 tons high efficiency

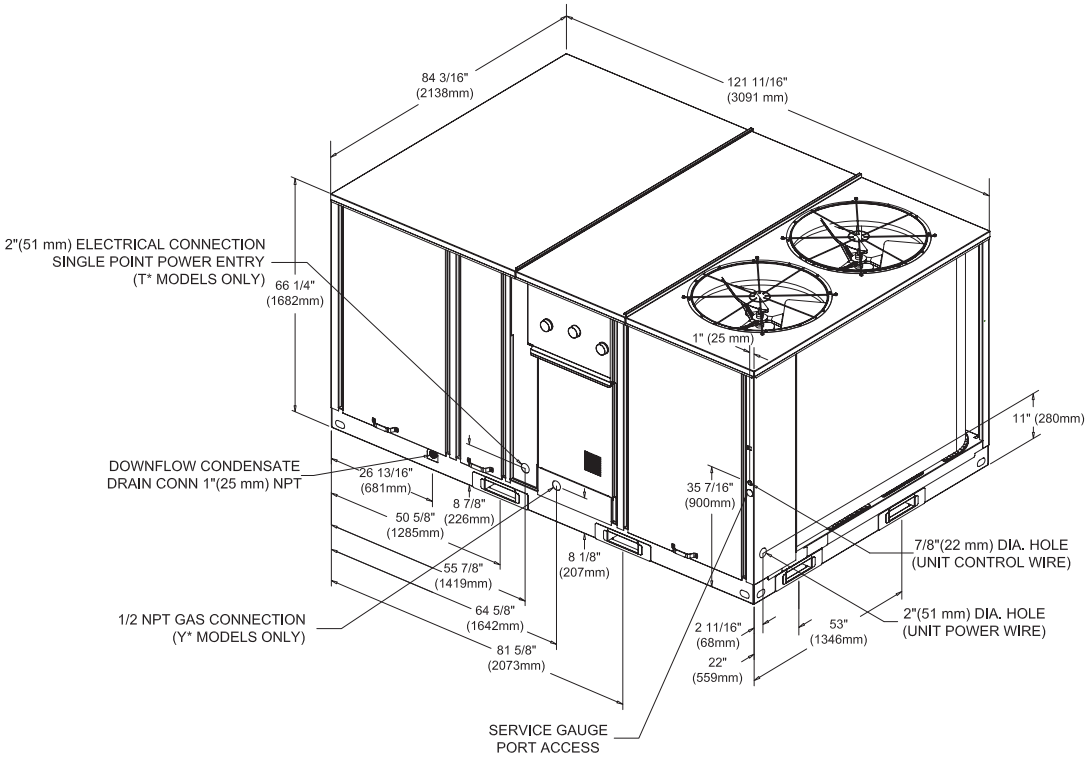

Figure 8. Cooling with optional electric heat and gas/electric models—15–25 tons standard efficiency, 12½–25 tons high efficiency—unit clearance and horizontal unit supply/return

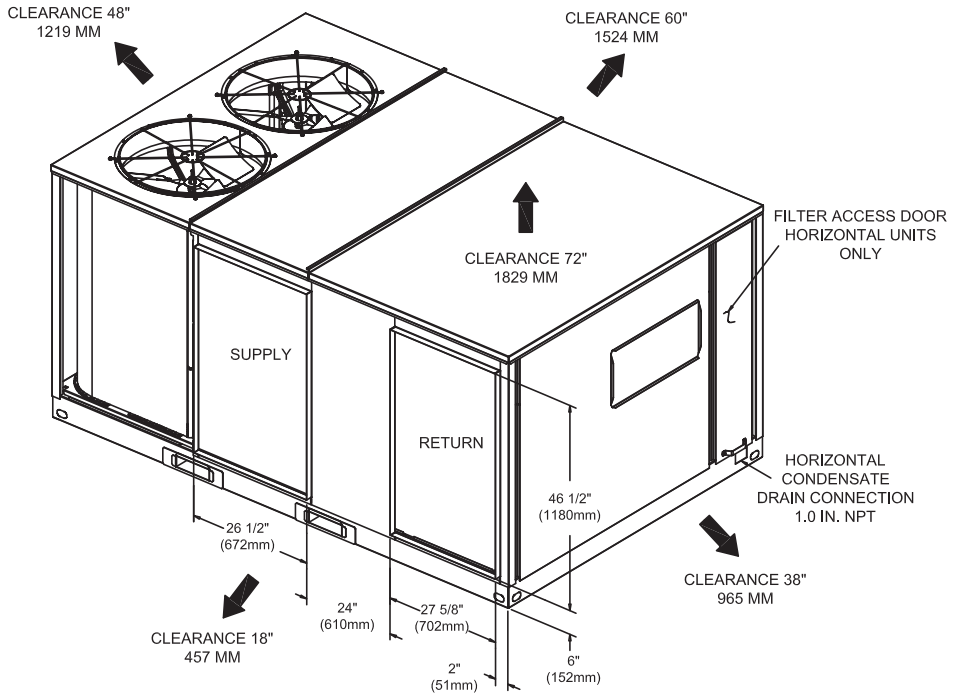

Figure 9. Cooling with optional electric heat and gas/electric models—15–25 tons standard efficiency, 12½–25 tons high efficiency—roof curb

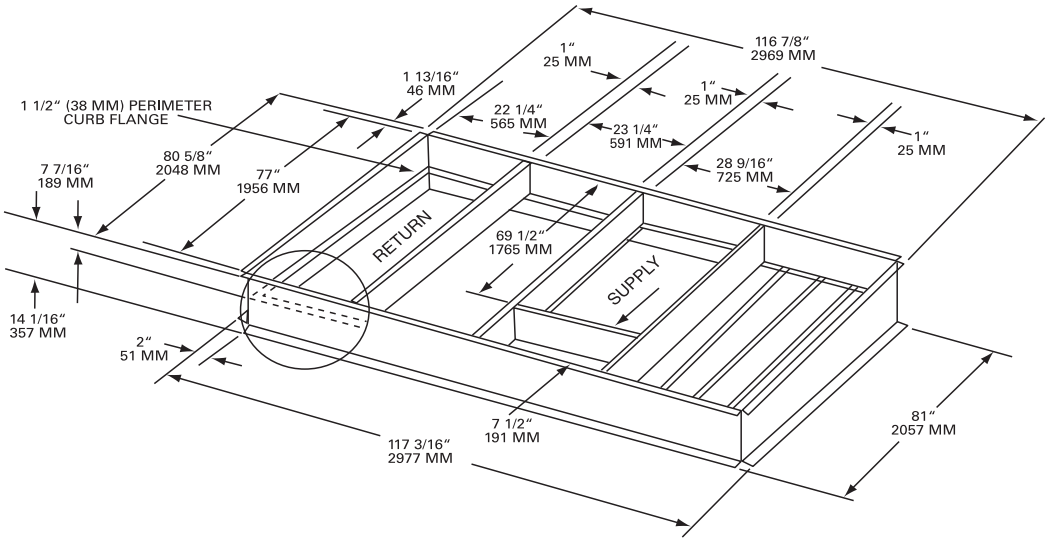

Figure 10. Cooling with optional electric heat and gas/electric models—15–25 tons standard efficiency, 12½–25 tons high efficiency—downflow duct connections—field fabricated

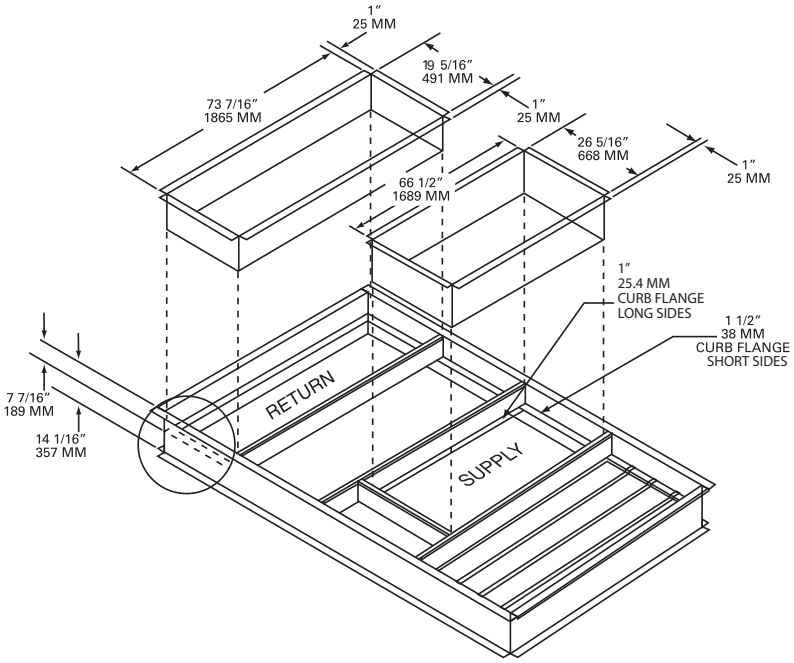

Notes:

- *Duct flanges mount 7-7/16″ down inside the curb on the 1-1½″ curb flanges.*
- *Roofcurb is intended for downflow use only.*

Figure 11. Cooling with optional electric heat and gas/electric models—15–25 tons standard efficiency, 12½–25 tons high efficiency—downflow unit clearance

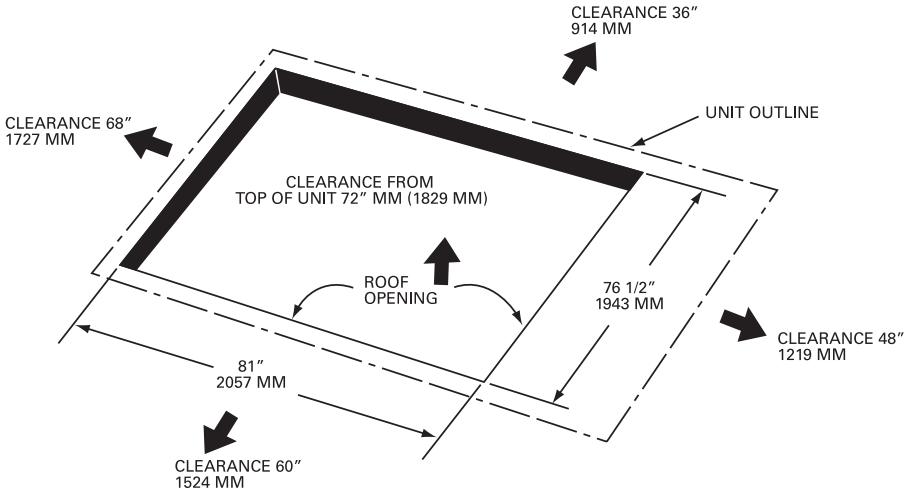

Figure 12. Downflow & horizontal condensate locations

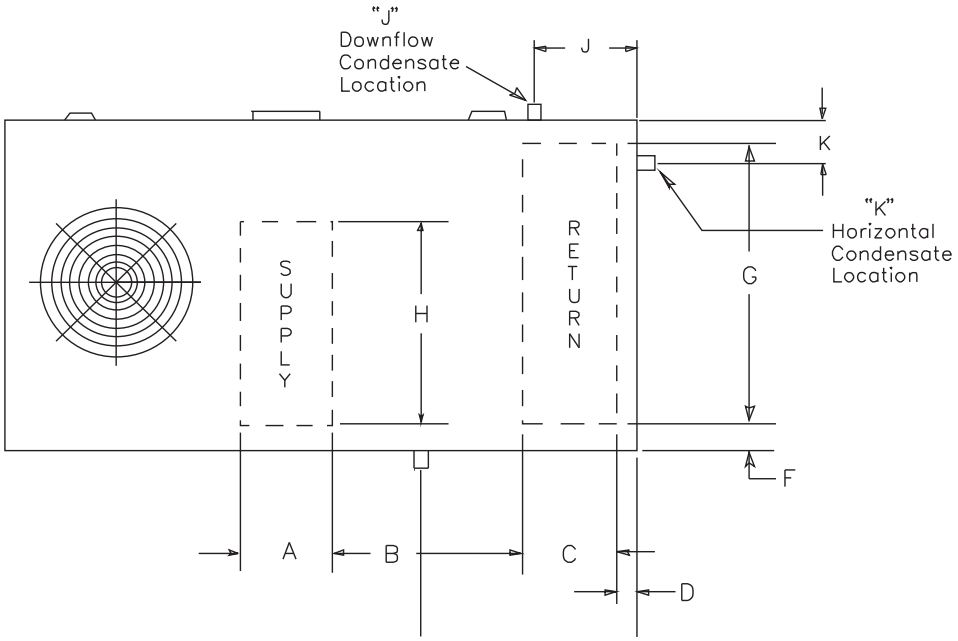

Table 109. Standard efficiency units (cooling and gas/electric)

Tons	Downflow Only							Condensate Drain Size	Condensate Drain Location	
									Downflow	Horizontal
	A	B	C	D	F	G	H		J	K
12½	26 7/16	22 1/2	18 11/16	4 1/4	4 1/4	62 7/16	54 11/16	1 NPT	25 5/8	6
15–25	26 7/16	28 3/4	19 15/16	4 1/4	4 1/4	76 5/16	68 11/16	1 NPT	26 3/4	5 3/8

Table 110. High efficiency units (cooling and gas/electric)

Tons	Downflow Only							Condensate Drain Size	Condensate Drain Location	
									Downflow	Horizontal
	A	B	C	D	F	G	H		J	K
12½–25	26 7/16	28 3/4	19 15/16	4 1/4	4 1/4	76 5/16	68 11/16	1 NPT	26 3/4	5 3/8

Table 111. Cooling unit—swing diameter & through the base electrical

Unit Model #	A	B	C	D	E
TSD150G	42 3/8	48 3/8	31	N/A	N/A
TSD180–300/301G, THD150–300G	29 1/2	56	38 1/2	18 1/2	N/A
TSH150G	42 3/8	N/A	31	N/A	12
TSH180–301G, THH150–300G	29 1/2	N/A	38 1/2	18 1/2	14

Note: All dimensions are in inches.

TOP VIEW SHOWING THROUGH THE BASE
ELECTRICAL UTILITY LOCATIONS AND ACCESS PANEL SWING CLEARANCES.

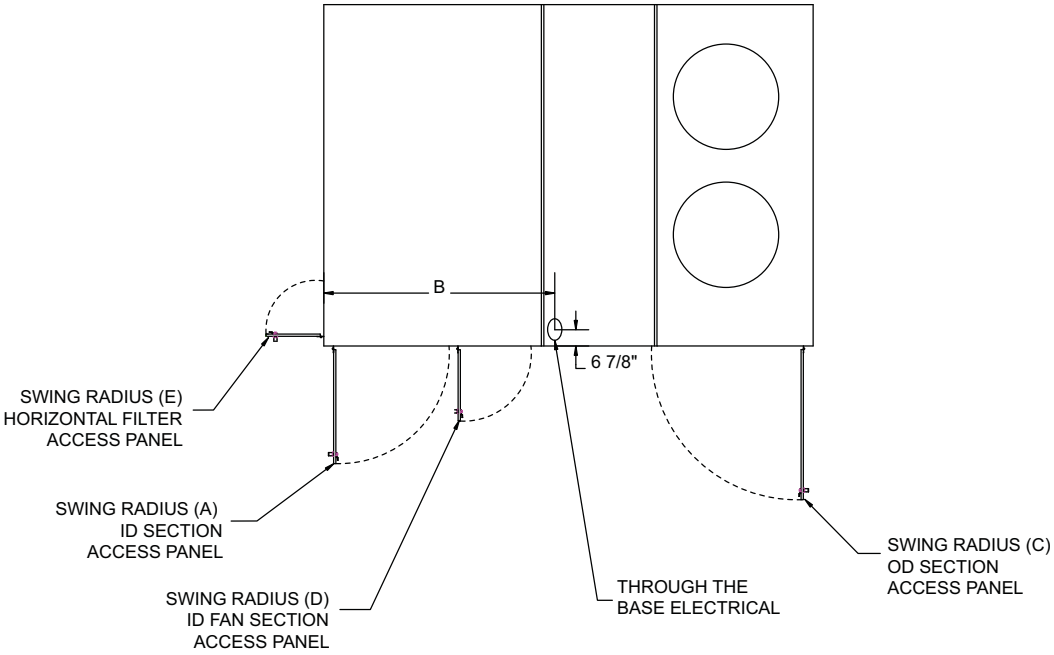

Table 112. Gas/electric unit—swing diameter & through the base electrical; height of gas pipe

Unit Model #	A	B	C	D	E	F
YSD150G	42 3/8	66 3/8	48 3/8	N/A	N/A	31
YSD180–301G, YHD150–300G	29 1/2	77 7/8	56	18 1/2	N/A	38 1/2
YSH150G	42 3/8	N/A	N/A	N/A	12	31
YSH180–301G, YHH150–300G	29 1/2	N/A	N/A	18 1/2	14	38 1/2

Note: All dimensions are in inches.

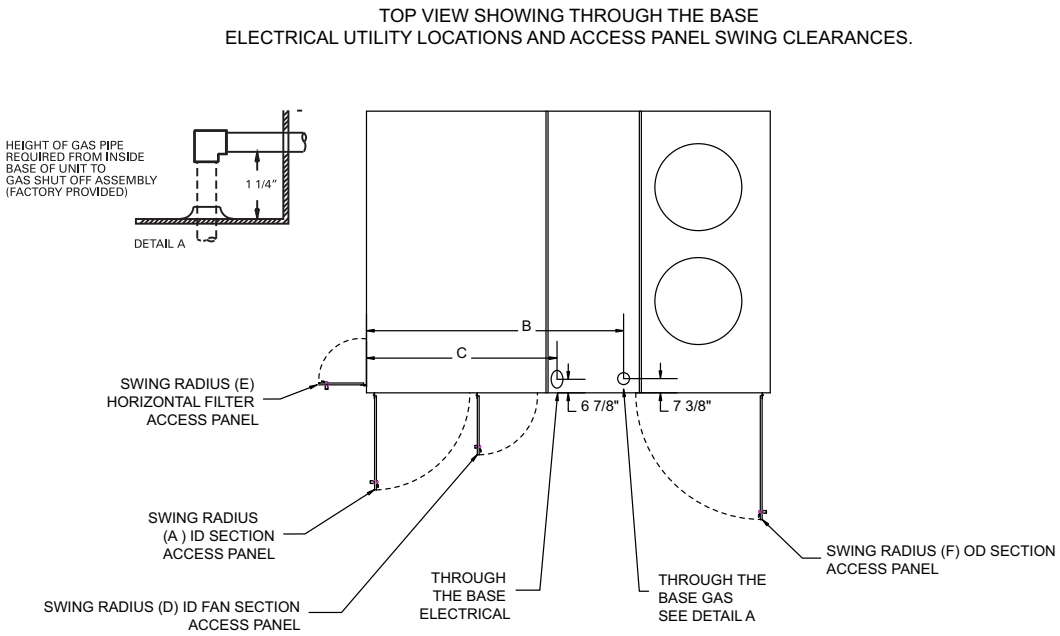

Figure 13. Fresh air hood (horizontal units)

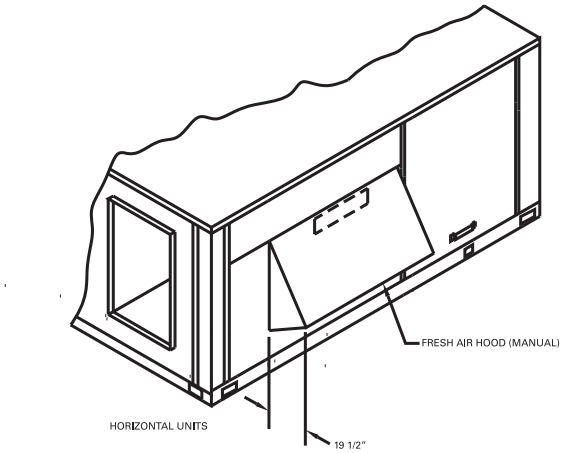

Figure 14. Fresh air hood (downflow units)

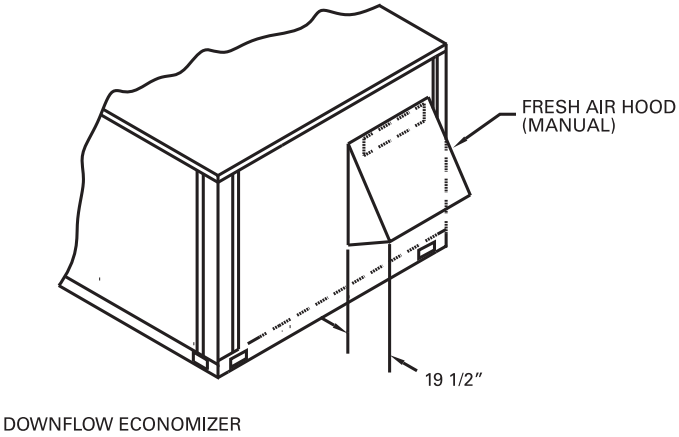

Figure 15. Power exhaust—downflow economizers

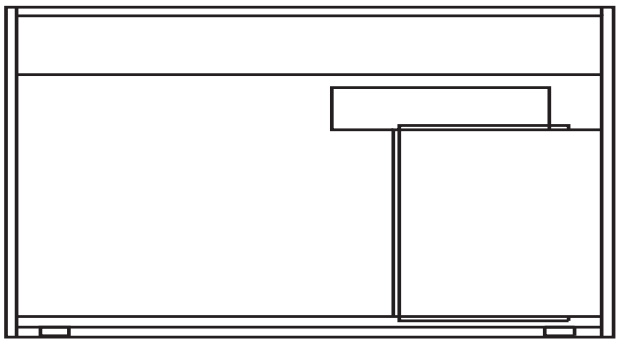

POWER EXHAUST with DOWNFLOW ECONOMIZERS ONLY. END PANEL VIEW.

Figure 16. Power exhaust—downflow economizers—side view

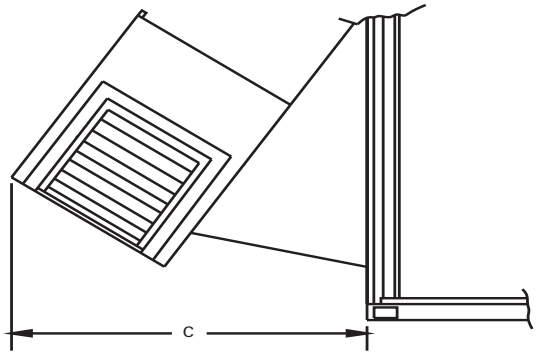

POWER EXHAUST with DOWNFLOW ECONOMIZERS only, SIDE VIEW

Figure 17. Economizer—horizontal units

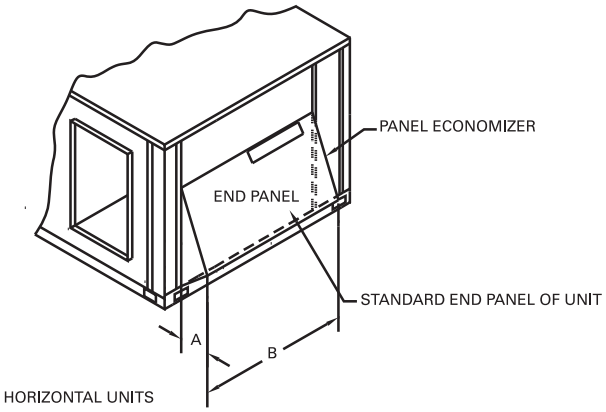

Note: When applying economizer to horizontal units, connected ductwork must be run full size to allow proper operation of economizer damper.

Figure 18. Economizer—downflow units

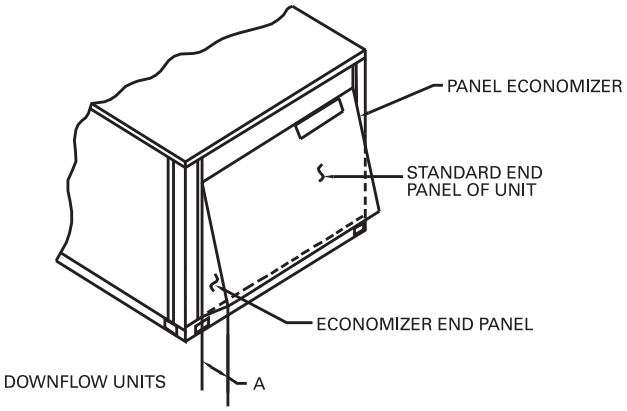

Table 113. Power exhaust dimensions

Unit Model #	A	B[a]	C[b]
T/YS*150G	17½	53¾	36
T/YH*150G, T/YS*180–301G, T/YH*180-300G	19½	64¾	39

(a) Horizontal dimension only. Downflow economizer is width of end panel.
(b) Power exhaust is applied on downflow economizer only.

Weights

Table 114. Maximum unit & corner weights (lb) and center of gravity dimensions (in.) cooling with optional electric heat units only

Tons	Unit Model No.	Weights (lb)[a], [b]		Corner Weights[c]				Center of Gravity (in.)	
		Shipping	Net	A	B	C	D	Length	Width
12½	TS*150G	1745	1373	516	364	208	285	44	25
	TH*150G	2299	1868	632	503	345	391	55	33
	THD150G(Reheat Units)	2390	1959	693	470	337	458	50	34
15	TS*180G	2194	1763	575	480	338	370	56	34
	TH*180G	2519	2076	619	564	425	469	58	36
	THD180G (Reheat Units)	2469	2026	701	491	360	474	51	35
17½	TS*210/211G	2251	1819	583	494	354	388	57	34
	TH*210G	2480	2037	622	542	399	474	56	36
	THD210G (Reheat Units)	2514	2071	736	495	360	480	50	34
20	TS*240G	2334	1902	615	498	357	433	55	35
	TH*240G	2550	2107	671	552	401	483	55	35
	THD240G (Reheat Units)	2534	2091	751	497	361	482	50	34
25	TS*300/301G	2376	1945	624	512	369	440	55	35
	TH*300G	2551	2108	672	556	400	481	55	35
	THD300G (Reheat Units)	2576	2133	738	522	385	487	52	34

(a) Weights are approximate. Horizontal and downflow unit and corner weights may vary slightly.
(b) Weights do not include additional factory or field installed options/accessories. For option/accessory additional weights, reference Table 116, p. 152 to be added to unit weights.
(c) Corner weights are given for information only. 12½–25 ton models must be supported continuously by a curb or equivalent frame support.
* Indicates both downflow and horizontal units.

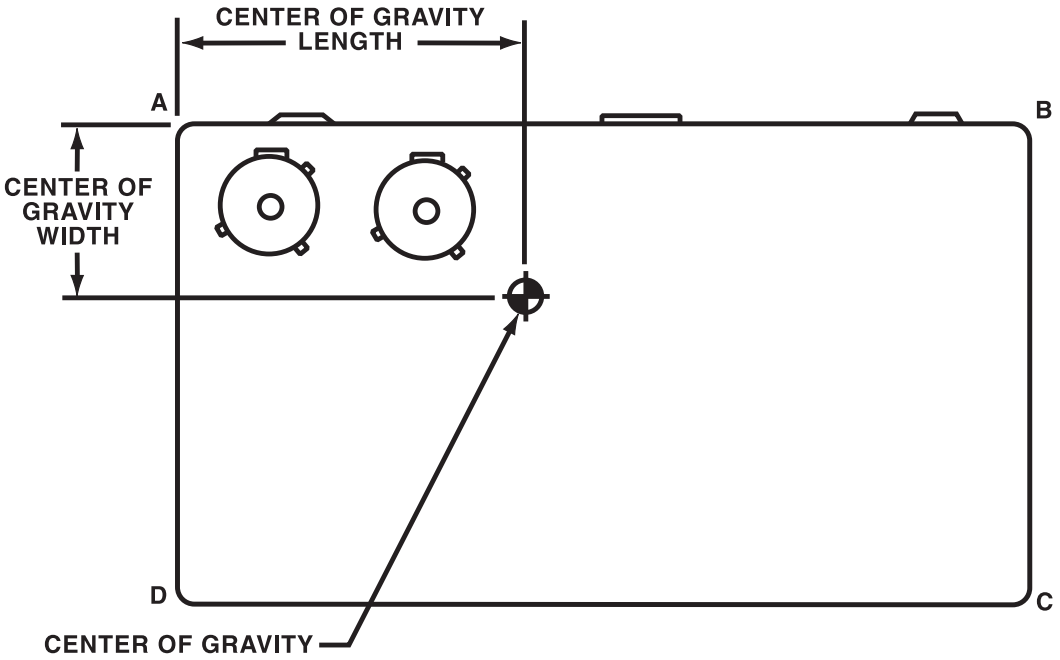

Weights

Table 115. Maximum unit & corner weights (lb) and center of gravity dimensions (in.) gas/electric heat units only

Tons	Unit Model No.	Weights (lb)[a],[b]		Corner Weights[c]				Center of Gravity (in.)	
		Shipping	Net	A	B	C	D	Length	Width
12½	YS*150G	1820	1448	537	381	225	306	45	26
	YH*150G	2402	1971	680	515	352	423	54	33
	YHD150G (Reheat Units)	2465	2034	714	487	354	478	50	34
15	YS*180G	2269	1838	595	497	355	390	56	34
	YH*180G	2665	2222	665	602	453	503	58	36
	YHD180G (Reheat Units)	2544	2101	722	508	377	494	51	35
17½	YS*210/211G	2326	1894	604	511	371	409	57	35
	YH*210G	2629	2186	670	581	427	508	56	36
	YHD210G (Reheat Units)	2589	2146	756	512	377	500	50	34
20	YS*240G	2409	1977	635	515	374	454	55	35
	YH*240G	2700	2257	719	591	430	517	55	35
	YHD240G (Reheat Units)	2609	2166	771	514	378	503	50	34
25	YS*300/301G	2451	2020	644	529	386	461	55	35
	YH*300G	2734	2291	734	603	432	523	55	35
	YHD300G (Reheat Units)	2651	2208	759	539	402	508	52	35

(a) Weights are approximate. Horizontal and downflow unit and corner weights may vary slightly.
(b) Weights do not include additional factory or field installed options/accessories. For option/accessory additional weights, reference Table 116, p. 152 to be added to unit weights.
(c) Corner weights are given for information only. 12½–25 ton models must be supported continuously by a curb or equivalent frame support.
* Indicates both downflow and horizontal units.

Table 116. Factory installed options (FIOPS)/accessory net weight (lb)[a], [b]

Accessories	B Cabinet		C Cabinet		C+ Cabinet	
	T/YSD150G	T/YSH150G	T/YSD180-301G T/YHD150G	T/YSH180-301G T/YHH150G	T/YHD180-300G	T/YHH180-300G
Standard Economizer	65	50	80	65	80	65
Low Leak Economizer	180	180	250	250	250	250
Manual Outside Air Damper	32	32	32	32	32	32
Motorized Outside Air Damper	60	60	75	75	75	75
Power Exhaust[c]	95	—	95	—	95	—
Roof Curb[c]	205	—	235	—	235	—
Oversized Motor	5	5	5	5	5	5
Hail Guard	34	34	43	43	51	51
Hinged Access Doors[d]	27	27	27	27	27	27
Powered Conv. Outlet	38	38	38	38	38	38
Through the Base Electrical	23	23	23	23	23	23
Circuit Breaker	10	10	10	10	10	10
Disconnect	10	10	10	10	10	10
Smoke Detector Supply	5	5	5	5	5	5
Smoke Detector Return	5	5	5	5	5	5
Novar	7	7	7	7	7	7
High Static Drive Kit[e]	2	2	2	2	2	2

Table 116. Factory installed options (FIOPS)/accessory net weight (lb)[a], [b]

Accessories	B Cabinet		C Cabinet		C+ Cabinet	
	T/YSD150G	T/YSH150G	T/YSD180-301G T/YHD150G	T/YSH180-301G T/YHH150G	T/YHD180-300G	T/YHH180-300G
Low Static Drive Kit[e]	2	2	—	—	—	—
LP Gas Conversion	5	5	5	5	5	5
All Zone Sensors	1	1	1	1	1	1
Electric Heaters						
6–23 kW[f] [g]	28/21	28/21	28/21[h]	28/21[h]	—	—
27–36 kW[f] [g]	31/27	31/27	33/27	33/27	33/27	33/27
54 kW[f] [g]	38/32	38/32	40/32	40/32	40/32	40/32
72 kW[f] [g] [i]	—	—	43/34	43/34	43/34	43/34
Stainless Steel Heat Exchanger						
150 MBh	50	50	50[h]	50[h]	—	—
250 MBh	50	50	50	50	50	50
350 MBh	75	75	75	75	75	75
400 MBh[j]	—	—	75	75	75	75
Stainless Steel Drain Pan	6.6	6.6	8.1	8.1	8.1	8.1
VFD						
3 & 5 HP[k]	32	34	32	34	32	34
7.5 HP[i]	—	—	63	65	63	65

(a) Net weight should be added to unit weight when ordering factory-installed accessories.
(b) Weights for FIOP accessories not listed are < 5 lb.
(c) Downflow only.
(d) An additional 30lbs should be added to the shipping weight when hinged door option is ordered.
(e) Not available on all models (see Fan Performance tables for specific models).
(f) For 600V heaters net weights are same as 480V heaters.
(g) To estimate shipping weight add 5 lb to net weight.
(h) Applicable to T/YH*150G units only.
(i) Not applicable to T/YH*150-180G, and T/YS*180G units.
(j) Applicable to T/Y**240-300* units only.
(k) Not applicable to T/Y**300* units.

Mechanical Specifications

General

The units shall be dedicated downflow or horizontal airflow. The operating range shall be between 115°F and 0°F in cooling as standard from the factory for all units. Cooling performance shall be rated in accordance with ARI testing procedures. All units shall be factory assembled, internally wired, fully charged with R-410A, and 100 percent run tested to check cooling operation, fan and blower rotation and control sequence, before leaving the factory. Wiring internal to the unit shall be colored and numbered for simplified identification. Units shall be UL listed and labeled, classified in accordance to UL 1995/C 22.2, 236-05 3rd Edition.

Packaged Rooftop units cooling, heating capacities, and efficiencies are AHRI certified within scope of AHRI Standard 340/360 (I-P) and ANSIZ21.47 and 10 CFR Part 431 pertaining to Commercial Warm Air Furnaces (gas heating units).

Casing

Unit casing shall be constructed of zinc coated, heavy gauge, galvanized steel. Exterior surfaces shall be cleaned, phosphatized, and finished with a weather-resistant baked enamel finish. Unit's surface shall be tested 672 hours in a salt spray test in compliance with ASTM B117. Cabinet construction shall allow for all maintenance on one side of the unit. In order to ensure a water and air tight seal, service panels shall have lifting handles and no more than three screws to remove. All exposed vertical panels and top covers in the indoor air section shall be insulated with a 1/2-inch, 1-pound density foil-faced, fire-resistant, permanent, odorless, glass fiber material. The base of the downflow unit shall be insulated with 1/2-inch, 1-pound density foil-faced, closed-cell material. The downflow unit's base pan shall have no penetrations within the perimeter of the curb other than the raised 11/8-inch high supply/return openings to provide an added water integrity precaution, if the condensate drain backs up. The base of the unit shall have provisions for forklift and crane lifting.

Compressors

All units shall have direct-drive, hermetic, scroll type compressors with centrifugal type oil pumps. Motor shall be suction gas-cooled and shall have a voltage utilization range of plus or minus 10 percent of nameplate voltage. Internal overloads shall be provided with the scroll compressors. All models shall have crankcase heaters, phase monitors and low and high pressure control as standard. Dual compressors are available on all standard efficiency models and 12.5 to 20 tons high efficiency models and allow for efficient cooling utilizing 3 stages of compressor operation (high efficiency models only). 25 tons high efficiency units have 3 compressors for up to 4 stages of compressor operation.

Controls

Unit shall be completely factory wired with necessary controls and contactor pressure lugs or terminal block for power wiring. Unit shall provide an external location for mounting a fused disconnect device. ReliaTel controls shall be provided for all 24-volt control functions. The resident control algorithms shall make all heating, cooling, and/or ventilating decisions in response to electronic signals from sensors measuring indoor and outdoor temperatures. The control algorithm maintains accurate temperature control, minimizes drift from set point, and provides better building comfort. A centralized control shall provide anti-short cycle timing and time delay between compressors to provide a higher level of machine protection.

Crankcase Heaters

These band heaters provide improved compressor reliability by warming the oil to prevent migration during off-cycles or low ambient conditions. These are standard on all Voyager models.

Defrost Controls

Adaptive demand defrost shall be provided to permit defrost wherever coil icing conditions begin to significantly reduce unit capacity.

Discharge Line Thermostat

A bi-metal element discharge line thermostat is installed as a standard option on the discharge line of each system. This standard option provides extra protection to the compressors against high discharge temperatures in case of loss of charge, extremely high ambient and other conditions which could drive the discharge temperature higher. Discharge line thermostat is wired in series with high pressure control. When the discharge temperature rises above the protection limit, the bi-metal disc in the thermostat switches to the off position, opening the 24 Vac circuit. When the temperature on the discharge line cools down, the bi-metal disc closes the contactor circuit, providing power to the compressor. When the thermostat opens the fourth time, the ReliaTel control must be manually reset to resume operation on that stage.

Evaporator and Condenser Coils

Microchannel coils will be burst tested by the manufacturer. Internally finned, 5/16” copper tubes mechanically bonded to a configured aluminum plate fin shall be standard on high efficiency models and microchannel shall be standard on standard efficiency for evaporator coils. Microchannel condenser coils shall be standard on all units. Coils shall be leak tested to ensure the pressure integrity. The evaporator coil and condenser coil shall be leak tested to 225 psig and pressure tested to 450 psig. Sloped condensate drain pans are standard.

Filters

Two inch standard filters shall be factory supplied on all units. Optional MERV 8 or MERV 13 filters with filter removal tool shall be available.

Gas Heating Section

The heating section shall have a drum and tube heat exchanger design using corrosion resistant steel components. A forced combustion blower shall supply premixed fuel to a single burner ignited by a pilotless hot surface ignition system.

In order to provide reliable operation, a negative pressure gas valve shall be used on standard furnaces and a pressure switch on furnaces with modulating heat that requires blower operation to initiate gas flow. On an initial call for heat, the combustion blower shall purge the heat exchanger 45 seconds before ignition.

After three unsuccessful ignition attempts, the entire heating system shall be locked out until manually reset at the thermostat. Units shall be suitable for use with natural gas or propane (field installed kit) and shall also comply with California requirements for low NO_x emissions. The 12½–25 tons shall have two stage heating (Gas/Electric only).

Indoor Fan

Units above shall have belt driven, FC centrifugal fans with adjustable motor sheaves. Units with standard motors shall have an adjustable idler-arm assembly for quick-adjustment of fan belts and motor sheaves. All motors shall be thermally protected. Oversized motors shall be available for high static application. All indoor fan motors meet the U.S. Energy Policy Act of 1992 (EPACT).

Outdoor Fans

The outdoor fan shall be direct-drive, statically and dynamically balanced, draw-through in the vertical discharge position. The fan motor(s) shall be permanently lubricated and shall have built-in thermal overload protection.

Phase Monitor

The Phase Monitor is a three-phase line monitor module that protects against phase loss, phase reversal and phase unbalance. It is intended to protect compressors from reverse rotation. It has an operating input voltage range of 190–600 Vac, and LED indicators for ON and FAULT. There are no field adjustments and the module will automatically reset from a fault condition.

Refrigerant Circuits

Each refrigerant circuit shall have independent fixed orifice or thermostatic expansion devices, service pressure ports, and refrigerant line filter driers factory installed as standard. An area shall be provided for replacement suction line driers. Thermal Expansion Valves (TXVs) shall be standard on all high efficiency units.

Unit Top

The top cover shall be one piece, or where seams exist, double hemmed and gasket sealed to prevent water leakage.

Variable Frequency Drive

Variable Frequency Drives are factory installed and tested to provide supply fan motor speed modulation, as well as modulating gas heat. VFDs on the supply fan, as compared to inlet guide vanes or discharge dampers, are quieter, more efficient, and are eligible for utility rebates. All VFDs are designed to allow bypass if required.

Note: *It has to be hard wired with relay and removed for temporary operations; see wave 121927.*

Bypass control will simply provide full nominal airflow in the event of drive failure.

Modulating gas heat models with VFDs allow tighter space temperature control with less temperature swing.

Factory Installed Options

CO_2 Sensor Wiring

The unit wiring for field installed $C0_2$ sensors. Factory-installed $C0_2$ sensor wiring saves time and ensures proper unit connections for the field installed $C0_2$ sensor kits.

Complete Coat™ Microchannel Condenser Coil

The cathodic epoxy type electrodisposition coating is formulated for high edge build to a number of different types of heat exchangers. The coating is selected to provide excellent resistance and durability to corrosive effects of alkalies, acids, alcohols, petroleum, seawater, salty air, and other corrosive environments. This coating shall be available on microchannel condenser coils.

Condensate Overflow Switch

This option shall shut the unit down in the event that a clogged condensate drain line prevents proper condensate removal from the unit.

Fault Detection & Diagnostics (FDD)

This offering meets the mandatory requirement of Title 24. This option provides detection of the following faults: Air temperature sensor failure/fault, not economizing when it should, economizing when it should not, damper not modulating, and excessive outdoor air. The FDD system shall be certified by the Energy Commission as meeting the requirements.

High Efficiency Motors

This option is available with efficiency ratings from 86.5 up to 91.0. It is not available for all models.

High Short Circuit Current Rating

Unit shall be provided with electrical subsystem that will withstand fault currents up to 65kA (208/230, 460 VAC) or 25kA (575 VAC) compliant with UL 1995 and NEC 440.4 (B). Each compressor circuit and the indoor fan shall have dedicated overcurrent protection. Three phase motors shall be protected by Class J time delay fuses. Single phase motors shall be protected by Class CC time delay fuses. All transformers shall also be protected with Class CC time delay fuses. Contactors shall be din rail mounted.

Hinged Access Doors

Sheet metal hinges are available on the Filter/Evaporator Access Door and the Compressor/Control Access Door. This option is available on all downflow models.

Horizontal Side Access with Circuit Breaker

This option is a thermal magnetic, molded case, HACR Circuit Breaker with provisions for through the base electrical connections. The circuit breaker will be installed in a water tight enclosure in the unit with access through a swinging door. Factory wiring will be provided from the switch to the unit high voltage terminal block. The circuit breaker will provide overcurrent protection, be sized per NEC and UL guidelines, and be agency recognized by UL/CSA.

Horizontal Side Access with Disconnect Switch

Three-pole, molded case, disconnect switch with provisions for through the base electrical connections are available. The disconnect switch will be installed in the unit in a water tight enclosure with access through a swinging door. Factory wiring will be provided from the switch to the unit high voltage terminal block. The switch will be UL/CSA agency recognized.

Note: *The disconnect switch will be sized per NEC and UL guidelines but will not be used in place of unit overcurrent protection.*

Human Interface

The Human Interface shall have a 5 inch color touchscreen display that conforms to FCC Part 15 Class B with an Ingress Protection Rating of IP24. The display text shall be readable by a person with 20/20 vision at a distance of 3 feet and 60° angle at lighting levels ranging from 100 lux - 25,000 lux. Also, the display shall operate at temperatures of -40° C to 70° C. Firmware and unit configurations shall be able to be restored via a USB storage device.

Multi-Speed Indoor Fan System

The multiple-speed (two-speed) indoor fan control option shall automatically switch operation of the indoor fan between high speed and low speed, based on the number of compressors operating. The indoor fan shall operate at high speed whenever the gas or electric heater is operating.

Multiple-Zone VAV Control

Multiple-zone VAV control shall vary the speed of the indoor fan to maintain the duct static pressure at a setpoint. In cooling mode, the compressors shall be cycled (or economizer modulated) to maintain the supply air temperature (SAT) at the desired setpoint. In heating mode, the indoor fan shall operate at maximum speed whenever the heater operating.

Powered or Unpowered Convenience Outlet

This option is a GFCI, 120V/15amp, 2-plug, convenience outlet, either powered or unpowered. When the convenience outlet is powered, a service receptacle disconnect will be available. The convenience outlet is powered from the line side of the disconnect or circuit breaker, and therefore will not be affected by the position of the disconnect or circuit breaker. This option can only be ordered when the Through the Base Electrical with either the Disconnect Switch, or Circuit Breaker, option is ordered. This option is available on all downflow models (Gas/Electric only).

Single Zone VAV

SZVAV systems combine Trane application, control and system integration knowledge to exactly match fan speed with cooling and heating loads, regardless of the operating condition.

Note: *Zone sensors are required for units configured for Single Zone VAV indoor fan system control in order to enable Single Zone VAV functionality.*

Stainless Steel Drain Pan

This option provides excellent corrosion and oxidation resistance. Drain pan shall be constructed of 304 stainless steel.

Stainless Steel Heat Exchanger

Gas heat exchanger shall be of drum and tube design constructed from a minimum 304 Grade stainless steel. The stainless steel heat exchanger shall have a 10-year warranty as standard (Gas/Electric only).

Supply, Return and Plenum Air Smoke Detector

With this option installed, if smoke is detected, all unit operation will be shut down. Reset will be manual at the unit. Return Air Smoke Detectors require minimum allowable airflow when used with certain models. See the Installation, Operation, and Maintenance (IOM) manual for the models affected and the minimum allowable airflow required. This option is available on all downflow models. Supply and/or Return Detectors may not be used with the Plenum Smoke Detector.

Through the Base Electrical with Circuit Breaker

This option is a thermal magnetic, molded case, HACR Circuit Breaker with provisions for through the base electrical connections. The circuit breaker will be installed in a water tight enclosure in the unit with access through a swinging door. Factory wiring will be provided from the switch to the unit high voltage terminal block. The circuit breaker will provide overcurrent protection, be sized per NEC and UL guidelines, and be agency recognized by UL/CSA.

Through the Base Electrical with Disconnect Switch

Three-pole, molded case, disconnect switch with provisions for through the base electrical connections are available. The disconnect switch will be installed in the unit in a water tight enclosure with access through a swinging door. Factory wiring will be provided from the switch to the unit high voltage terminal block. The switch will be UL/CSA agency recognized.

Note: *The disconnect switch will be sized per NEC and UL guidelines but will not be used in place of unit overcurrent protection.*

Through the Base Utilities Access

An electrical service entrance shall be provided allowing electrical access for both control and main power connections inside the curb and through the base of the unit. Option will allow for field installation of liquid-tight conduit and an external field installed disconnect switch.

Trane® Air-Fi™ Wireless

Trane® Air-Fi™ wireless communication shall be factory installed and pre-wired. Air-Fi must also be Zigbee® Building Automation certified and the system communicates using standard BACnet™ open protocol.

Two-Inch Pleated Filters

Two-inch MERV 8 and MERV 13 media filters with filter removal tool shall be available on all models.

VAV Operation

The VFD shall receive a 0-10 Vdc signal from the unit control based upon supply static pressure, and shall cause the drive to accelerate or decelerate as required to maintain the supply static pressure setpoint. When subjected to high ambient return conditions the VFD shall reduce its output frequency to maintain operation.

Factory or Field Installed Options

BACnet™ Communications Interface

This option shall be provided to allow the unit to communicate directly with a generic open protocol BACnet MS/TP Network Building Automation System Controls.

Barometric Relief

Designed to be used on downflow units, barometric relief is an unpowered means of relieving excess building pressure.

Clogged Filter/Fan Failure Switch

A dedicated differential pressure switch is available to achieve active fan failure indication and/or clogged filter indication. These indications will be registered with either a zone sensor with status indication lights or an Integrated Comfort™ System.

Differential Pressure Switches

These options allow for individual fan failure and dirty filter indication. The fan failure switch will disable all unit functions and “flash” the Service LED on the zone sensor. The dirty filter switch will light the Service LED on the zone sensor and will allow continued unit operation.

Discharge Air Temperature Sensing Kit

This kit provides true discharge air temperature sensing in heating models. This sensor is a status indicator readable through Tracer™ or Tracker™. The kit is functional only with the ReliaTel Options Module.

Economizer— Standard, Downflow

The assembly includes fully modulating 0–100% motor and dampers, barometric relief, minimum position setting, preset linkage, wiring harness with plug, fixed dry bulb and spring return actuator. The barometric relief damper shall be standard with the downflow economizer and shall provide a pressure operated damper that shall be gravity closing and shall prohibit entrance of outside air during the equipment “off” cycle. Solid state enthalpy and differential enthalpy control shall be field-installed.

Economizer - Low Leak, Downflow

This accessory meets low leak requirements for ASHRAE 90.1, IECC, and CA Title 24 standards (3 cfm/ft^2@1" wg exterior air, 4 cfm/ft^2@1" wg return air). This option allows 100% outdoor air supply from 0-100% modulating dampers and is standard with barometric relief. It can be paired with powered exhaust for additional building pressure relief.This option can be paired with or without Fault Detection & Diagnostics (FDD) to meet current mandatory CA Title 24 requirements. Available on downflow units only. The economizers come with three control options, dry bulb and reference or comparative enthalpy (optional).

Electric Heaters

Electric heat modules shall be available for installation within the basic unit. Electric heater elements shall be constructed of heavy-duty nickel chromium elements internally delta connected for 240 volt, wye connected for 480 and 600 volt. Staging shall be achieved through ReliaTel. Each heater package shall have automatically reset high limit control operating through heating element contactors. All heaters shall be individually fused from the factory, where required, and shall meet all NEC and CEC requirements when properly installed. Power assemblies shall provide single-point connection. Electric heat modules shall be UL listed or CSA certified. If ordering the Through the Base Electrical option with an Electric Heater, the heater must be factory installed.

Indoor Fan Motor Shaft Grounding Ring

Shaft grounding rings are used on all VFD driven motors to provide a conductive discharge path away from the motor bearings to ground. Bearing Protection Ring shall be maintenance free circumferential ring of conductive micro fibers that discharges voltages to ground.

LonTalk® Communications Interface

The LonTalk communications interface, when installed in a Voyager unit, allows the unit to communicate as a Tracer™ LCI-V device or directly with generic LonTalk Network Building Automation System Controls.

Oversized Motors

Oversized motors shall be available for high static applications.

Reference or Comparative Enthalpy

Reference Enthalpy is used to measure and communicate outdoor humidity. The unit receives and uses this information to provide improved comfort cooling while using the economizer. Comparative Enthalpy measures and communicates humidity for both outdoor and return air conditions, and return air temperature. The unit receives and uses this information to maximize use of economizer cooling, and to provide maximum occupant comfort control. Reference or Comparative Enthalpy option shall be available when a factory or field installed Downflow Economizer is ordered. This option is available on all downflow models.

Tool-less Hail Guards

Tool-less, hail protection quality coil guards are available for condenser coil protection.

Trane Communication Interface

This factory or field-installed option shall be provided to interface ReliaTel™ controlled units with the Trane Integrated Comfort™ systems.

Field Installed Options

CO_2 Sensor

The CO_2 sensor shall have the ability to monitor the concentration (parts per million, ppm) of CO_2 (Carbon Dioxide) in the air. As the CO_2 concentration changes, the outside air damper modulates to meet the current ventilation needs of the zone.

Note: *Two field installed kits are offered: CO_2 sensor and wiring or CO_2 sensor only. The CO_2 sensor only kit should be ordered with factory installed CO_2 sensor wiring. Factory installed CO_2 sensor wiring saves set-up time and ensures proper unit connections for the CO_2 sensor.*

Economizer — Standard, Horizontal

The horizontal economizer shall contain the same features as the downflow economizer with the exception of barometric relief.

Economizer - Low Leak, Downflow & Horizontal

This accessory meets low leak requirements for ASHRAE 90.1, IECC, and CA Title 24 standards (3 cfm/ft^2@1" wg exterior air, 4 cfm/ft^2@1" wg return air).This option allows 100% outdoor air supply from 0-100% modulating dampers and is standard with barometric relief. It can be paired with powered exhaust for additional building pressure relief.

High Static Drive

The high static drive option shall allow the standard motor on the 12½ , 15, 17½, 20 and 25 ton units to operate with improved external static capabilities.

Humidity Sensor

Field installed, wall-mounted or duct-mounted humidity sensor is used to control activation of the hot gas reheat dehumidification option. The humidity sensor can be set for humidity levels between 40% and 60% relative humidity by adjusting the ReliaTel Options Module.

Manual Outside Air Damper

The rain hood and screen shall provide up to 25% outside air.

Motorized Outside Air Dampers

Manually set outdoor air dampers shall provide up to 50% outside air. Once set, outdoor air dampers shall open to set position when indoor fan starts. The damper shall close to the full closed position when indoor fan shuts down.

Powered Exhaust

The powered exhaust shall provide exhaust of return air, when using an economizer, to maintain better building pressurization.

Roof Curb—Downflow

The roof curb shall be designed to mate with the downflow unit and provide support and a water tight installation when installed properly. The roof curb design shall allow field-fabricated rectangular supply/return ductwork to be connected directly to the curb. Curb shall be shipped knocked down for field assembly and shall include wood nailer strips.

Remote Potentiometer

The minimum position setting of the economizer shall be adjusted with this accessory.

Ventilation Override Accessory

With the Ventilation Override Accessory installed, the unit can be set to transition up to three different pre-programmed sequences for Smoke Purge, Pressurization, and Exhaust. The transition occurs when a binary input on the RTOM is closed (shorted). This would typically be a hard wired relay output from a smoke detector or fire control panel.

Wireless Zone Sensor

LCD display that provides heat, cool, auto, or off. Includes two temperature setpoints and a lockable setting with °F or °C indicators.

Zone Sensors

This option shall be provided to interface with ReliaTel and shall be available in either manual, automatic, programmable with night setback, with system malfunction lights or remote sensor options.

Note: *Zone sensors are required for units configured for Single Zone VAV indoor fan system control in order to enable Single Zone VAV functionality.*

Ingersoll Rand (NYSE:IR) advances the quality of life by creating comfortable, sustainable and efficient environments. Our people and our family of brands—including Club Car®, Ingersoll Rand®, Thermo King® and Trane®—work together to enhance the quality and comfort of air in homes and buildings; transport and protect food and perishables; and increase industrial productivity and efficiency. We are a global business committed to a world of sustainable progress and enduring results.

ingersollrand.com

Globally Recognized. Industry Respected.

The AHRI Certified mark indicates Ingersoll Rand's participation in the AHRI Certification program. For verification of individual certified products, go to www.ahridirectory.org.

Ingersoll Rand has a policy of continuous product and product data improvement and reserves the right to change design and specifications without notice.
We are committed to using environmentally conscious print practices.

RT-PRC028AC-EN 17 Mar 2017
Supersedes RT-PRC028AB-EN (02 Mar 2017)

©2017 Ingersoll Rand