# Drilling and Tapping Machines

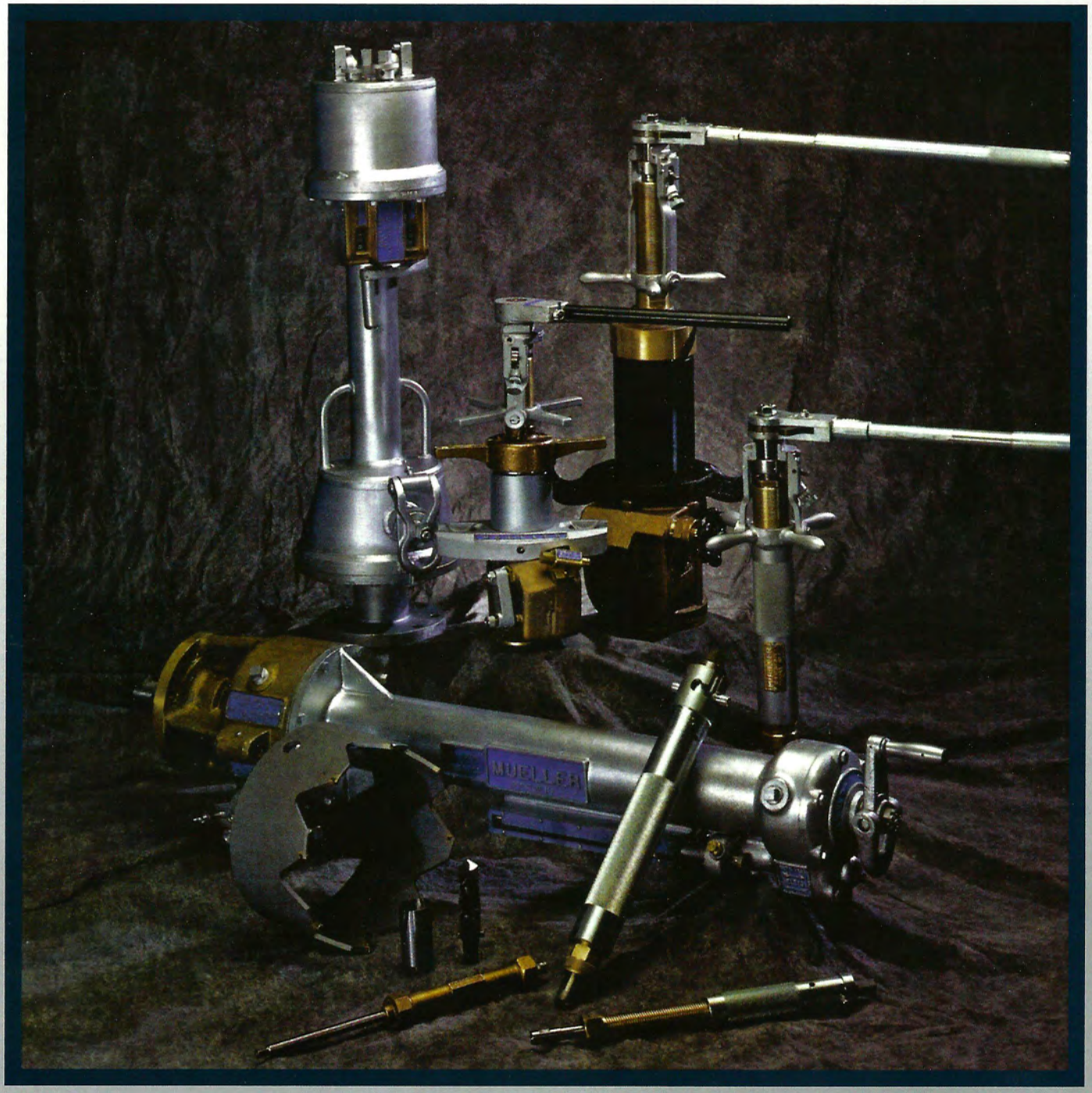


## Rugged design, proven dependability - The Industry Standard for Performance

Mueller Canada

82 Hooper Rd. Barrie, ON, L4N 8Z9
Office: **705-719-9965** Fax: **705-719-4959** Sales Fax: **1-800-263-4145**

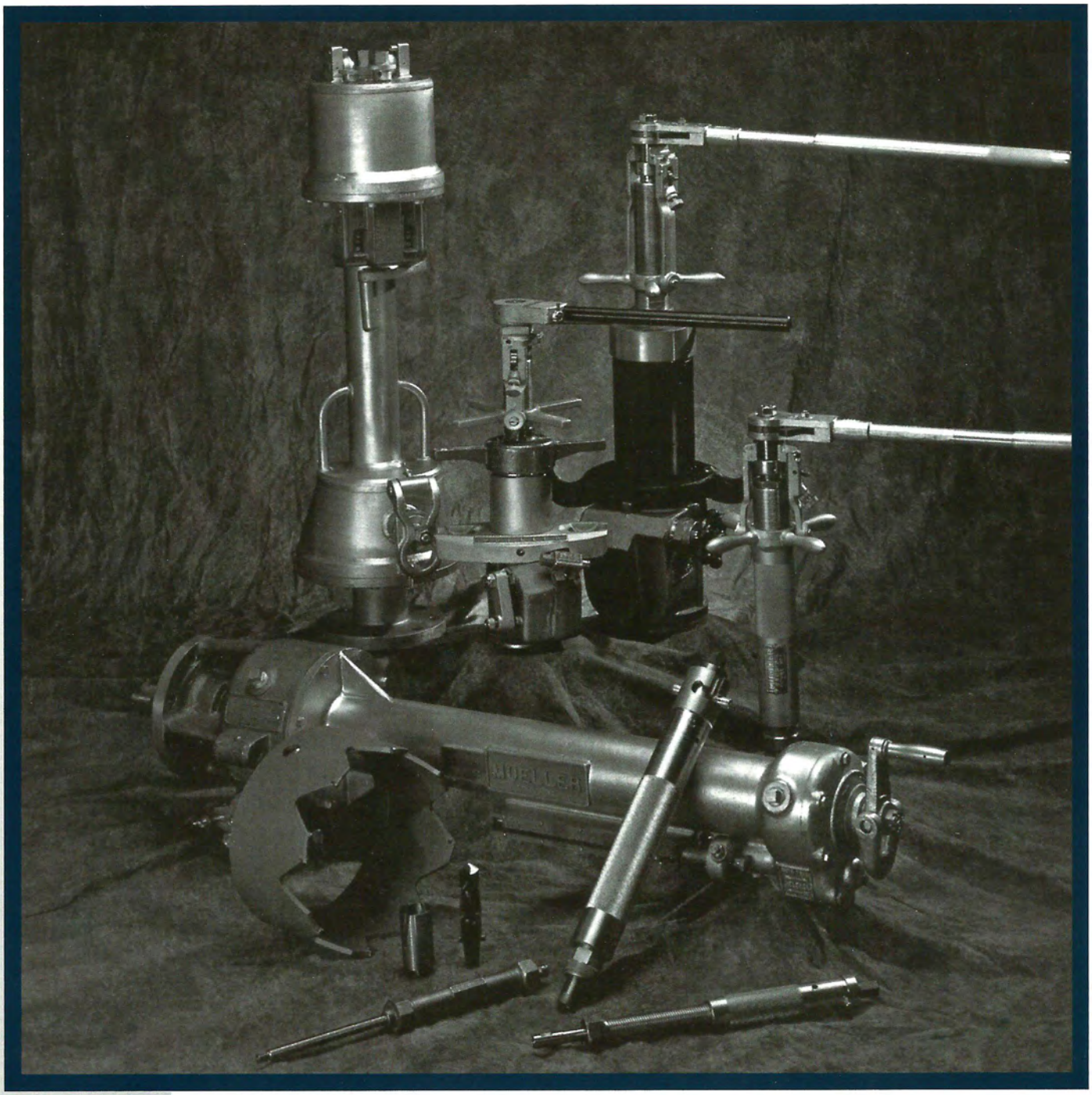

# Drilling and Tapping Machine Accessories

## Index


Tru-Cut Machine and Equipment ..... 4
Tru-Cut Repair Parts ..... 5

D-5 Machine and Equipment for Tapping Ductile Iron Pipe ..... 6
D-5 Product Information ..... 6
D-5 Machine and Equipment for Tapping PVC Plastic Pipe ..... 6
D-5 Repair Parts ..... 7

E-5 Machine and Equipment for Tapping Ductile Iron Pipe ..... 8
E-5 Product Information ..... 8
E-5 Machine and Equipment for Tapping PVC Plastic Pipe ..... 8
E-5 Repair Parts ..... 9

B-101 Machine and Equipment for Tapping Ductile Iron Pipe ..... 10
B-101 Machine and Equipment for Tapping PVC Plastic Pipe ..... 10
B-101 Repair Parts ..... 11

CL-12 Machine and Equipment ..... 12
CL-12 Product Information ..... 12

C1-36 Machine and Equipment ..... 13
C1-36 Product Information ..... 13

Power Operators ..... 14
Rental Equipment Terms and Conditions ..... 14

PL-2 Machine and Equipment ..... 15
PL-2 Repair Parts ..... 15

# Tru-Cut Drilling Machine

**MUELLER® Tru-Cut Machine - for drilling operations under pressure on plastic pipe - 11/16" and 7/8" cutters inclusive for 3/4" and 1" corporation stops.**

Mueller's Tru-Cut machine is a simple, easy-to-use drilling machine for use on PVC pipe. The highly durable, heavy duty construction contributes to long life under heavy use in field operations. A manual feed yoke allows independent control of the cutting speed and the tool feed rate of the machine. The boring bar can be disengaged from the feed yoke for quick repositioning, and the drive nut accepts both a standard 3/8" drive ratchet and a 3/4" socket/box wrench.

- Catalogue number UB-1
- Hand operation
- Cutting speed controlled by manual feed yoke
- Two retaining arms on feed sleeve safely retain the boring bar and help prevent line pressure from pushing the boring bar up once the cut is complete
- Drive nut pinned in place and accepts both a standard 3/8" ratchet and a 3/4" socket/box wrench
- Designed for use on pressurized or dry mains
- Used to cut plastic pipe only
- Cuts through 3/4" and 1" corporation stops and service saddles
- O-ring sealed
- Single piece boring bar
- 7" boring bar travel
- 200 psig (1379 kPa) maximum working pressure
- 150° F (66° C) maximum temperature rating

NOTE: The working pressure or temperature rating is reduced accordingly if any attachment, valve or fitting subjected to pressure or temperature during the drilling operation has a lower maximum working pressure ot temperature rating than specified above.

**Equipment furnished with each Tru-Cut machine:**

- Storage container
- Body gasket
- Operating instructions

**Equipment to be selected:**

- Shell cutters
- Drilling machine adapters

| Required Equipment for Cuts Into | |
|---|---|
| **Plastic Pipe** | |
| **3/4"** | **1"** |
| 11/16" Shell Cutter<br>681919 | 7/8" Shell Cutter<br>681920 |
| Adapter Nipple<br>507632 | Adapter Nipple<br>507633 |
| Adapter Nipple Gasket<br>H10893.20 | Adapter Nipple Gasket<br>52914 |
| Coupon Removal Tool<br>681242 | |

**NOTE:** Mueller Cutting Grease is Recommended for All Cuts

| | |
|---|---|
| Machine only shipping weight | 5.25 lbs (2.4 kg) |

# Tru-Cut Drilling Machine
## Repair Parts

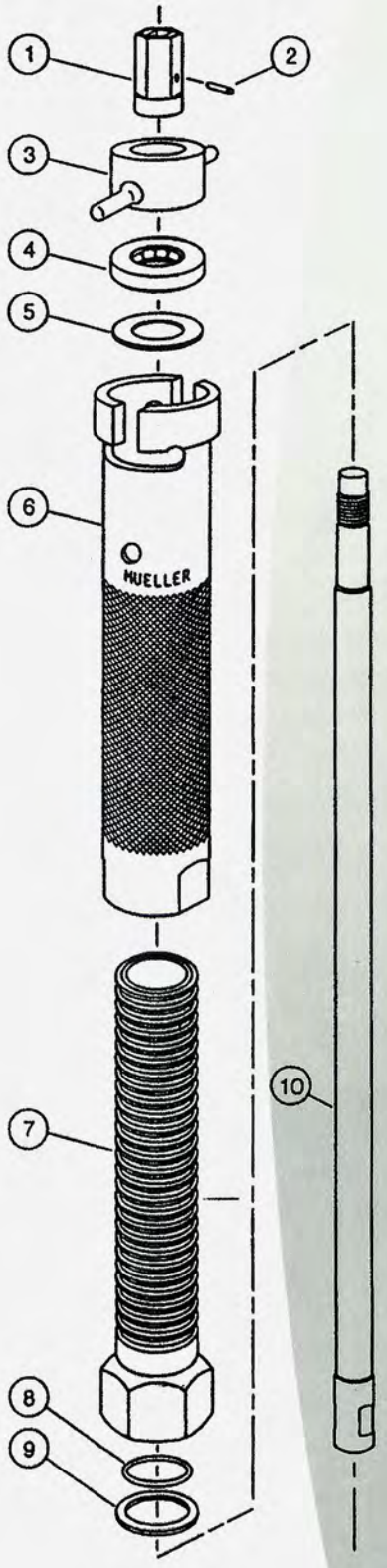


| Item No. | Part Number | Part Name |
|---|---|---|
| 1 | 528716 | Drive Nut |
| 2 | 507143 | Pin |
| 3 | 89073 | Connector |
| 4 | 78855 | Bearing |
| 5 | 78856 | Collar |
| 6 | 528725 | Feed sleeve |
| 7 | 528717 | Body |
| 8 | 78858 | O-ring |
| 9 | 58733 | Gasket |
| 10 | 528718 | Boring Bar |

| Machine Tool Kit | |
|---|---|
| PVC | |
| 3/4" | 1" |
| 11/16" Shell Cutter 681919 | 7/8" Shell Cutter 681920 |
| 3/4" Corp. Adapter 507632† | 1" Corp. Adapter 507633† |

†Adapter fits Flare, CTS 110, CTS Pack Joint

NOTE: These illustrations are for parts identification only. DO NOT use these illustrations for assembly or disassembly of machine. MUELLER offers a machine repair service. Contact MUELLER for details.

**TO ORDER SPECIFY QUANTITY, PART NUMBER AND PART NAME (include catalogue number and model number of machine)**

# D-5 Drilling Machine

**MUELLER® D-5 Drilling Machine - for drilling operations under pressure - 5/8" to 2" inclusive**

- Catalogue number D-5
- Hand or power operation
- Designed for use on pressurized or dry mains
- Used to drill through 3/4" to 2" corporation stops and service saddles
- 14" (356 mm) boring bar travel
- Has boring bar locking mechanism
- Use on cast iron or ductile iron pipe • cement lined cast iron or ductile iron pipe • A-C pipe • PVC plastic pipe • steel pipe • concrete pipe
- 500 psig (3447 kPa) maximum working pressure at 100° F (38° C)
- 250° F (121° C) maximum working temperature at 375 psig (2586 kPa)

NOTE: The working pressure or temperature rating is reduced accordingly if any attachment, valve, or fitting subjected to pressure or temperature during the drilling operation has a maximum working pressure or temperature rating less than that specified above.

**Equipment furnished with each D-5 machine:**

- Metal storage case
- Ratchet handle
- Body gasket
- Adjustable wrench
- Two double open end wrenches
- Cutting grease
- Instruction manual

**Equipment to be selected:**

- Drills and drill holders
- Shell cutters, cutter holders and pilot drills
- Drilling machine adapter nipples
- Power operators

| | |
|---|---|
| Total Shipping Weight | 60.5 lbs (27 kg) |
| Machine only weight | 35 lbs (16 kg) |

| Required Equipment for Cuts Into | | | |
|---|---|---|---|
| **C/L Ductile Pipe** | | | |
| **3/4"** | **1"** | **1-1/2"** | **2"** |
| 11/16" Drill 36037 | 7/8" Drill 33253 | 1-7/16" Cem-Res Drill 36056 | 1-7/8" Cem-Res Drill 36069 |
| Drill Holder 36998 | Drill Holder 33555 | Drill Holder 33316 | Drill Holder 33314 |
| Adapter Nipple 37902 | Adapter Nipple 37903 | Adapter Nipple 507644 | Adapter Nipple 507645 |
| CJ Adapter Gasket H10893.20 | CJ Adapter Gasket H10895.25 | CJ Adapter Gasket 507646 | CJ Adapter Gasket 507647 |
| **Plastic Pipe** | | | |
| **3/4"** | **1"** | **1-1/2"** | **2"** |
| 11/16" Shell Cutter 681919 | 7/8" Shell Cutter 681920 | 1-7/16" Shell Cutter 528087 | 1-3/4" Shell Cutter 528088 |
| Shell Cutter Holder 507634 | Shell Cutter Holder 507634 | Shell Cutter Holder 508198 | Shell Cutter Holder 508198 |
| Adapter Nipple 37902 | Adapter Nipple 37903 | Adapter Nipple 507644 | Adapter Nipple 507645 |
| CJ Adapter Gasket H10839.20 | CJ Adapter Gasket H10895.25 | CJ Adapter Gasket 507646 | CJ Adapter Gasket 507647 |
| Boring Bar Adapter 40438 | | | |

# D-5 Drilling Machine
## Repair Parts

| Item No. | Part Number | Part Name |
|---|---|---|
| 1 | 86391 | Handle extension |
| 2 | 85308 | Ratchet handle |
| 3 | 46029 | Retaining nut |
| 4 | 40007 | Spring |
| 5 | 40006 | Spring pin |
| 6 | 40004 | Ratchet dog |
| 7 | 40137 | Ratchet wheel |
| 8 | 51377 | Packing gland |
| 9 | 51458 | O-ring |
| 10 | 502027 | Rollpin |
| 11 | 502025 | Pivot arm |
| 12 | 502026 | Pivot arm spring |
| 13 | 502029 | Lock nut |
| 14 | 502028 | Operating screw |
| 15 | 36758 | Body |
| 16 | 33278 | Body gasket |
| 17 | 503141 | Boring bar |
| 18 | 580945 | Boring bar complete |
| 19 | 88366 | Cutting grease |
| 20 | 58196 | Wrench |
| 21 | 91664 | Wrench |
| 22 | 580610 | Friction collar |
| 23 | 48130 | Friction collar rollpin |
| 24 | 580946 | Feed tube & yoke complete |
| 25 | 50133 | Washer |
| 26 | 79745 | Retaining screw |
| 27 | 500851 | Detent |
| 28 | 59810 | Detent spring |
| 29 | 305006 | Detent screw |
| 30 | 40139 | Stud |
| 31 | 40138 | Bolt* |
| 32 | 40177 | Handle bar |
| 33 | 46255 | Nut* |

*Order both parts when replacing either one
Operating instruction manual form number 9335

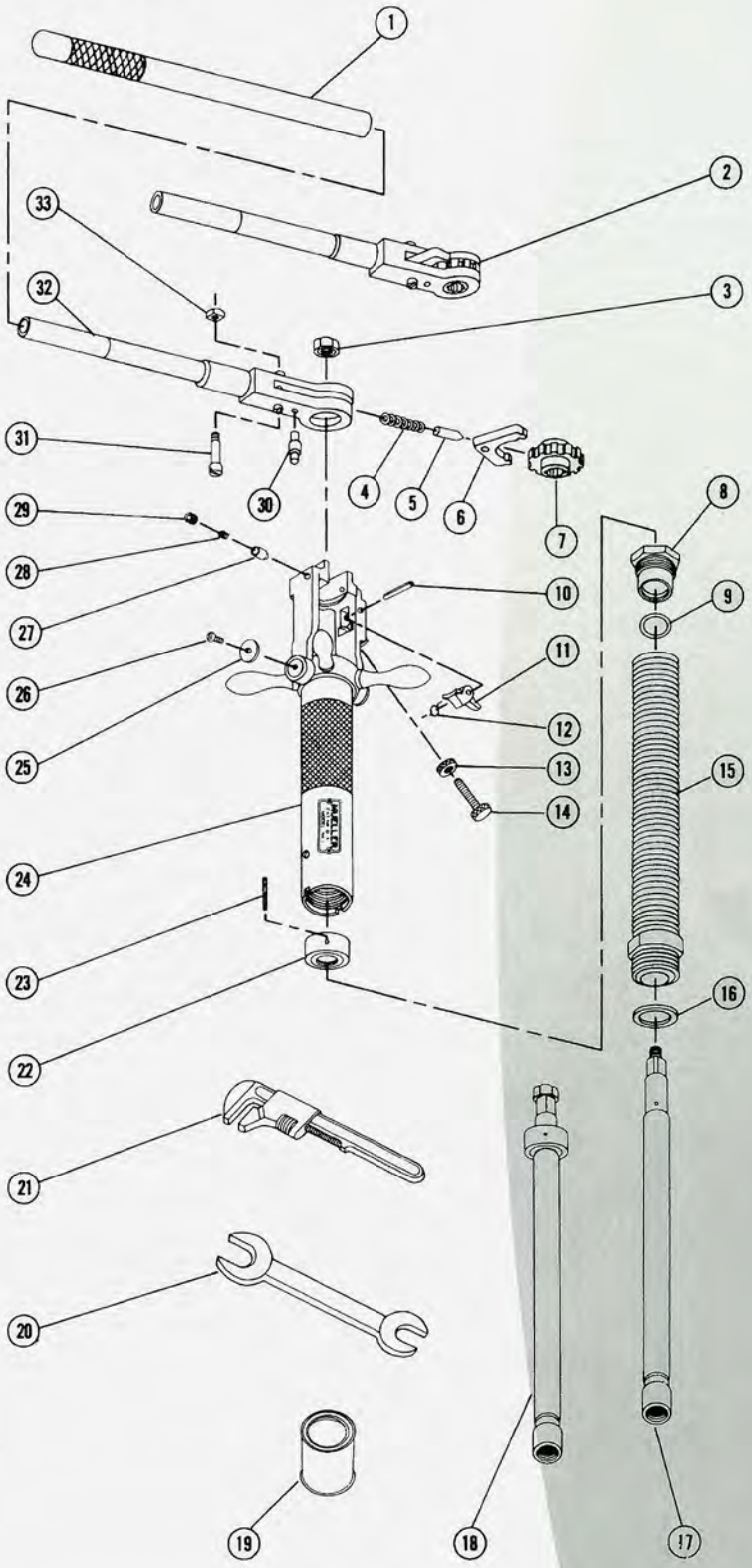


Storage chest 580968 (not illustrated)

NOTE: These illustrations are for parts identification only. DO NOT use these illustrations for assembly or disassembly of machine. MUELLER offers a machine repair service, and field tapping service. Contact MUELLER for details.

**TO ORDER SPECIFY QUANTITY, PART NUMBER AND PART NAME (include catalogue number and model number of machine)**

Mueller Canada

# E-5 Drilling Machine

**MUELLER® E-5 Machine - for drilling operations under pressure - 7/16" to 1-7/8" inclusive**

- Catalogue number E-5
- Hand or power operation
- Designed for use on pressurized or dry mains
- Used to drill through 1/2" to 2" corporation stops and service saddles
- 12-1/8" (308 mm) boring bar travel
- Has boring bar locking mechanism
- Use on cast iron or ductile iron pipe • cement lined cast iron or ductile iron pipe • A-C pipe • cast iron O.D. PVC plastic pipe • steel pipe • concrete pipe
- 500 psig (3447 kPa) maximum working pressure at 100° F (38° C)
- 250° F (121° C) maximum working temperature at 375 psig (2586 kPa)

NOTE: The working pressure or temperature rating is reduced accordingly if any attachment, valve, or fitting subjected to pressure or temperature during the drilling operation has a maximum working pressure or temperature rating less than that specified above.

**Equipment furnished with each E-5 machine:**

- Metal storage case
- Reversible ratchet handle
- Body gasket
- Adjustable wrench
- Two double open end wrenches
- Cutting grease
- Instruction manual

**Equipment to be selected:**

- Drills and drill holders
- Shell cutters, cutter holders and pilot drills
- Drilling machine adapters
- Power operators

| | |
|---|---|
| Total Shipping Weight | 59.5 lbs (27 kg) |
| Machine only weight | 25 lbs (11 kg) |

| Required Equipment for Cuts Into | | | |
|---|---|---|---|
| **C/L Ductile Pipe** | | | |
| **3/4"** | **1"** | **1-1/2"** | **2"** |
| 11/16" Drill 36037 | 7/8" Drill 33253 | 1-7/16" Shell Cutter 682287 | 1-7/8" Shell Cutter 682289 |
| Drill Holder 61981 | Drill Holder 61993 | Shell Cutter Holder 502900 | Shell Cutter Holder 502900 |
| Machine Adapter 52019 | Machine Adapter 36750 | CJ Machine Adapter 501949 | CJ Machine Adapter 508199 |
| CJ Adapter Gasket H10893.20 | CJ Adapter Gasket H10895.25 | CJ Adapter Gasket 507646 | CJ Adapter Gasket 507647 |
| **Plastic Pipe** | | | |
| **3/4"** | **1"** | **1-1/2"** | **2"** |
| 11/16" Shell Cutter 681919 | 7/8" Shell Cutter 681920 | 1-7/16" Shell Cutter 528087 | 1-3/4" Shell Cutter 528088 |
| Shell Cutter Holder 507634 | Shell Cutter Holder 507634 | Shell Cutter Holder 508198 | Shell Cutter Holder 508198 |
| Machine Adapter 52019 | Machine Adapter 36750 | CJ Machine Adapter 501949 | CJ Machine Adapter 508199 |
| CJ Adapter Gasket H10893.20 | CJ Adapter Gasket H10895.25 | CJ Adapter Gasket 507646 | CJ Adapter Gasket 507647 |

# E-5 Drilling Machine
## Repair Parts

| Item No. | Part Number | Part Name |
|---|---|---|
| 1 | 80085 | Crank handle |
| 2 | 500635 | Handle pin |
| 3 | 51484 | Handle |
| 4 | 83431 | Knob |
| 5 | 37883 | Spring |
| 6 | 51426 | Ratchet dog |
| 7 | 51427 | Plug |
| 8 | 502027 | Pivot arm pin |
| 9 | 502025 | Pivot arm |
| 10 | 502026 | Pivot arm spring |
| 11 | 502029 | Lock nut |
| 12 | 502028 | Operating screw |
| 13 | 48130 | Friction collar pin |
| 14 | 51432 | Packing gland |
| 15 | 46726 | O-ring |
| 16 | 503159 | Body |
| 17 | 47756 | Body gasket |
| 18 | 580999 | Boring bar complete |
| 19 | 88366 | Cutting grease |
| 20 | 91664 | Wrench |
| 21 | 59787 | Wrench |
| 22 | 96536 | Wrench |
| 13 | 580610 | Friction collar |
| 24 | 580895 | Feed tube and yoke |
| 25 | 50133 | Washer |
| 26 | 79745 | Retaining screw |
| 27 | 500851 | Detent pin |
| 28 | 59810 | Spring |
| 29 | 305006 | Screw |
| 30 | 51428 | Retaining ring |
| 31 | 503163 | Wheel bushing |
| 32 | 503162 | Ratchet wheel |
| 33 | 500803 | Operating pin |
| 34 | 37863 | Detent knob |

Operating instruction manual form number 9335

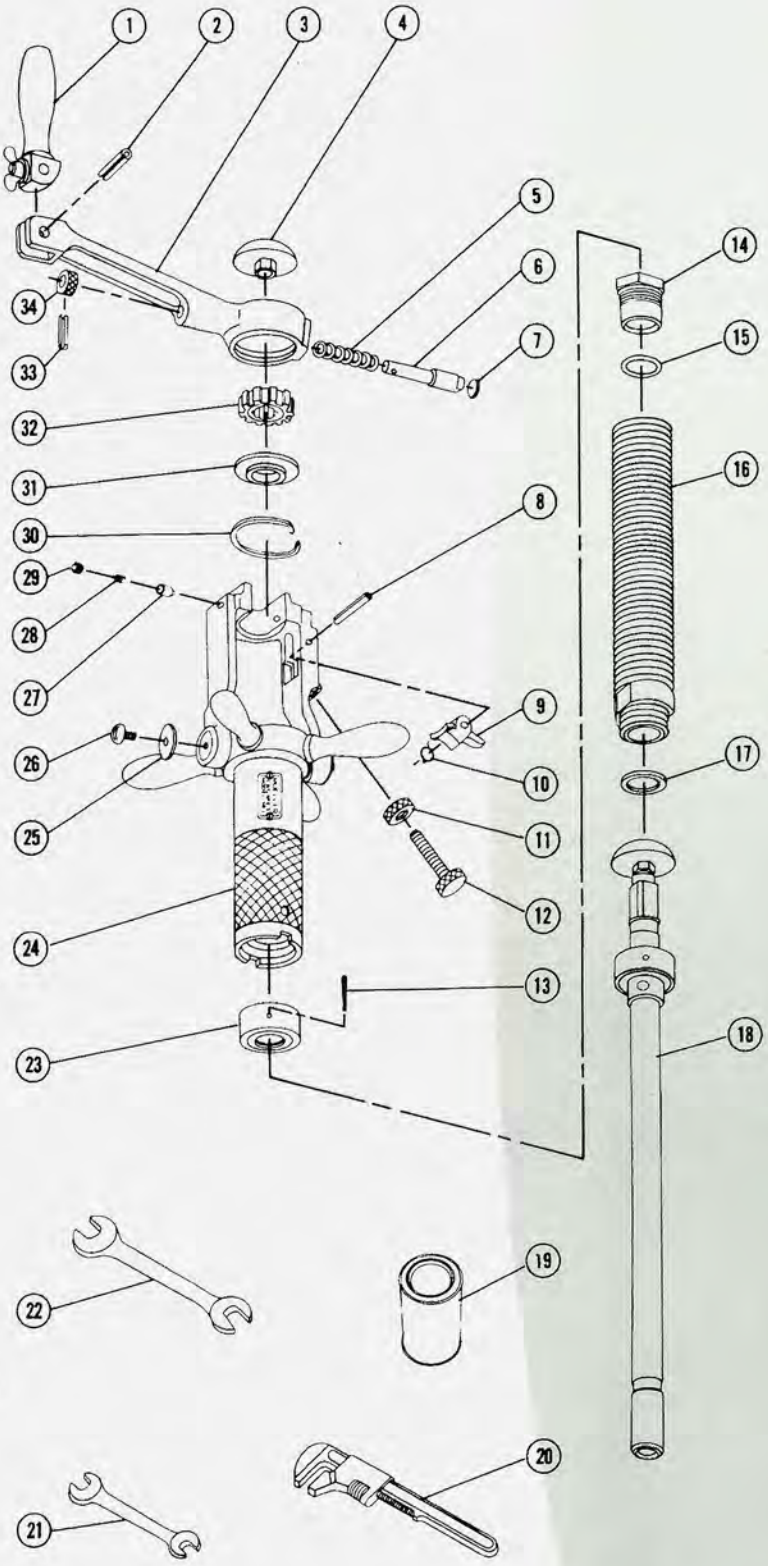

Storage chest 580970 (not illustrated)

NOTE: These illustrations are for parts identification only. DO NOT use these illustrations for assembly or disassembly of machine. MUELLER offers a machine repair service, and field tapping service. Contact MUELLER for details.

**TO ORDER SPECIFY QUANTITY, PART NUMBER AND PART NAME (include catalogue number and model number of machine)**

# B-101 Drilling and Tapping Machine

**MUELLER® B-101 Machine - for drilling, tapping and inserting operations under pressure - 1/2" to 2-1/2" inclusive**

- Catalogue number B-101 (with boring bar locking mechanism)
- Hand or power operation
- Designed for use on pressurized or dry mains
- Insert or extract corporation stops to 1" in size; pipe plugs to 2-1/2" in size
- Use on cast iron or ductile iron pipe • cement lined cast iron or ductile iron pipe • A-C pipe • cast iron O.D. PVC plastic pipe • steel pipe
- 90 psig (621 kPa) maximum working pressure without optional power clevis
- 250 psig (1724 kPa) maximum working pressure with optional power clevis

* When drilling or tapping above 1" by hand, use extention handle
**When power operating the machine to drill and tap 1-1/2" and larger, only combined shell cutters and taps should be used

**Equipment furnished with each machine:**

- Metal carrying case
- Reversible ratchet handle
- Small saddle gasket (fits between machine and saddle)
- Large saddle gasket (fits between saddle and pipe)
- Round link chain
- Chain hooks/washer/nuts
- Open end wrench (for E-Z release inserting tools)
- Box wrench (for tightening chain hook nuts and tool retaining screw)
- Body cleaning chisel (for cleaning debris from inside machine body)
- Blow-off valve
- Cutting grease

**Equipment to be selected:**

- Combined drills and taps or shell cutters
- Inserting tools (used to insert corporation stops or pipe plugs)
- Machine saddles (adapts machine to specific type and size of main)

**Optional Equipment:**

- Extracting tools (used to remove stops or plugs from mains)
- Equipment for special uses
- Power operators

| Required Equipment for Cuts Into | |
|---|---|
| **Ductile Iron Pipe** | |
| **3/4"** | **1"** |
| 4" Saddle for DI and DI Sized PVC Pipe 75812 | |
| 6" Saddle for DI and DI Sized PVC Pipe 75815 | |
| 8" Saddle for DI and DI Sized PVC Pipe 75817 | |
| 10" Saddle for DI and DI Sized PVC Pipe 40074 | |
| 12" Saddle for DI and DI Sized PVC Pipe 75821 | |
| 3/4" Combination Cem-Rez D&T 680539 | 1" Combination Cem-Rez D&T 680540 |
| 3/4" E-Z Release Screw Plug 680600 | 1" E-Z Release Screw Plug 680601 |
| **C900 PVC Pipe (note: use some saddles 4-12" as for DI above)** | |
| **3/4"** | **1"** |
| 3/4" Shell Cutter 508110 | 1" Shell Cutter 508111 |
| 3/4" Tap & Shank 581502 | 1" Tap & Shank 581503 |
| 3/4" E-Z Release Screw Plug 680600 | 1" E-Z Release Screw Plug 680601 |

| | |
|---|---|
| Total Shipping Weight | 114 lbs (52 kg) |
| Handling weight during operation - Upper section | 20 lbs (9 kg) |
| Handling weight during operation - Lower section | 23 lbs (10 kg) |

NOTE: All tools and equipment used with the B-101 can also be used with the B-100

# B-101 Drilling and Tapping Machine

## Repair Parts

| Item No. | Part Number | Part Name |
|---|---|---|
| 1 | 500851 | Detent pin |
| 2 | 59810 | Spring |
| 3 | 305006 | Screw |
| 4 | 580610 | Friction collar |
| 5 | 48130 | Retaining pin |
| 6 | 580611 | Feed nut & yoke complete |
| 7 | 79745 | Yoke retaining screw |
| 8 | 50133 | Washer |
| 9 | 79269 | Boring bar O-ring |
| 10 | 500685 | Feed sleeve & cap |
| 11 | 500687 | Cap packing |
| 12 | 505022 | Boring bar |
| 13 | 502027 | Rollpin |
| 14 | 502025 | Pivot arm |
| 15 | 502026 | Pivot arm spring |
| 16 | 502028 | Operating screw |
| 17 | 502029 | Lock nut |
| 18 | 500686 | Oil plug |
| 19 | 500887 | Wiper ring |
| 20 | 580609 | Boring bar complete |
| 21 | 500692 | Bearing |
| 22 | 48130 | Retaining pin |
| 23 | 500691 | Bearing sleeve |
| 24 | 97795 | Chain yoke retaining screw |
| 25 | 500683 | Chain yoke |
| 26 | 500682 | Cylinder |
| 27 | 500670 | Valve body O-ring |
| 28 | 501373 | By-pass valve screw |
| 29 | 83843 | By-pass valve complete |
| 30 | 78833 | By-pass valve gasket |
| 31 | 502046 | Valve body |
| 32 | 40066 | Small saddle gasket |
| 33 | 40067 | Large saddle gasket |
| 34 | 52165 | Lock wash |
| 35 | 500672 | Valve gate arm |
| 36 | 72627 | Spring |
| 37 | 500675 | Lock screw |
| 38 | 500676 | Lock nut |
| 39 | 500674 | Valve washer and stem |
| 40 | 500673 | Gate washer |
| 41 | 500671 | Valve gate |
| 42 | 50369 | Pipe plug |
| 43 | 581646 | Blow-off valve |
| 44 | 501061 | Handle screw |
| 45 | 302575 | Lock screw |
| 46 | 46280 | Handle knob |
| 47 | 500669 | Handle nut |
| 48 | 500668 | Lever handle |
| 49 | 500667 | Valve stem retaining nut |
| 50 | 500666 | Valve stem |
| 51 | 41301 | Valve stem O-ring |
| 52 | 500709 | Chain hook |
| 53 | 500707 | Chain hook washer |
| 54 | 500706 | Chain hook nut |
| 55 | 500780 | Chain |
| 56 | 500694 | Tool retaining screw |
| 57 | 88366 | Cutting grease |
| 58 | 500693 | Knock out pin |
| 59 | 500708 | Chain hook wrench |
| 60 | 40050 | Body cleaning chisel |
| 61 | 501579 | Inserting tool wrench |
| 62 | 79490 | Retaining ring |
| 63 | 500703 | Bushing |
| 64 | 40137 | Ratchet wheel |
| 65 | 307978 | Washer |
| 66 | 500699 | Ratchet handle body |
| 67 | 500702 | Operating pin |
| 68 | 500701 | Detent knob |
| 69 | 500704 | Ratchet handle bar |
| 70 | 51427 | Plug |
| 71 | 500700 | Ratchet dog |
| 72 | 37883 | Spring |
| 73 | 83846 | Ratchet handle complete |

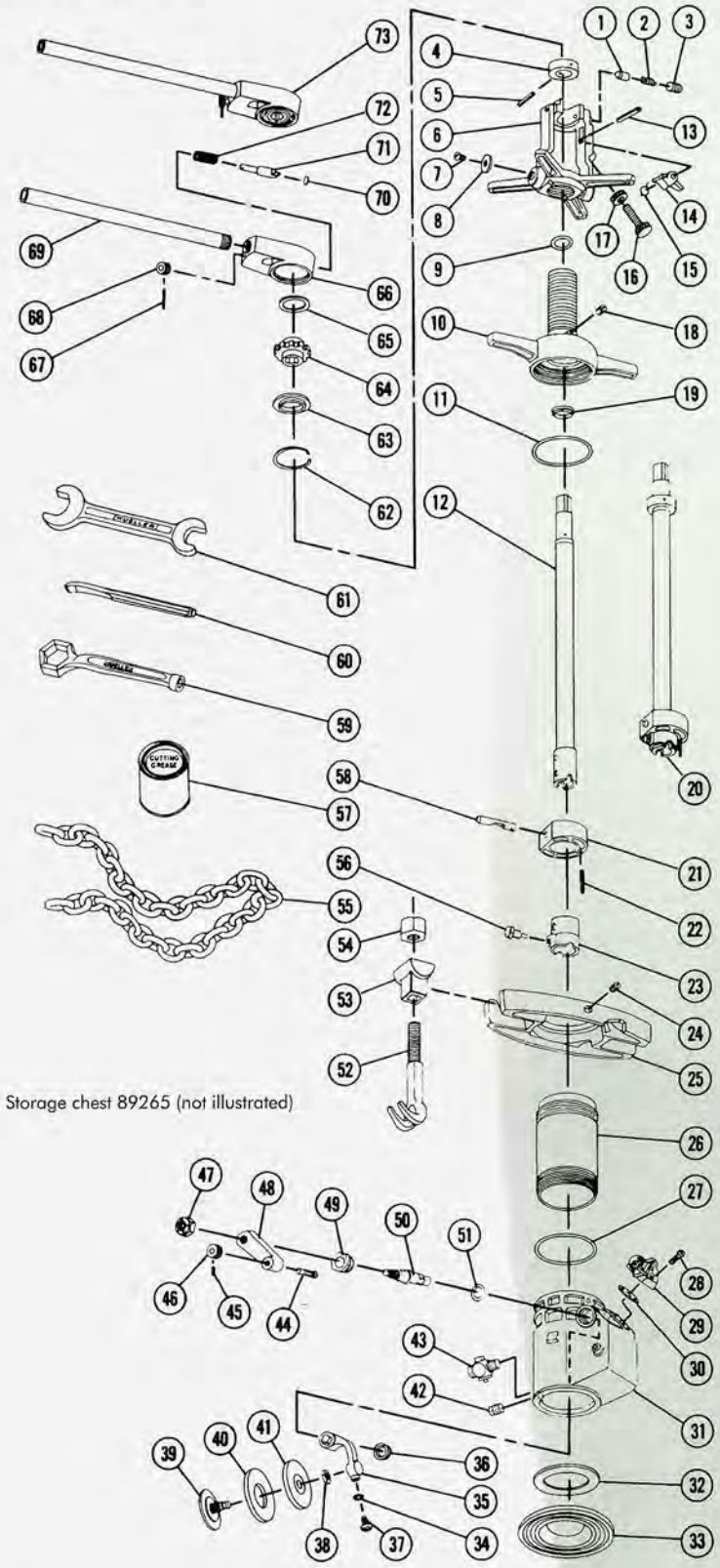


Storage chest 89265 (not illustrated)

NOTE: These illustrations are for parts identification only. DO NOT use these illustrations for assembly or disassembly of machine. MUELLER offers a machine repair service, and field tapping service. Contact MUELLER for details.

**TO ORDER SPECIFY QUANTITY, PART NUMBER AND PART NAME (include catalogue number and model number of machine)**

# CL-12 Drilling Machine

**MUELLER® CL-12 Drilling Machine - for drilling operations under pressure - 1-1/2" to 12" inclusive**

- Catalogue number CL-12
- Hand or power operation
- Designed for use on pressurized or dry mains
- Used to cut 1-1/2" to 12" holes
- 25"(635 mm) boring bar travel
- Use on cast iron or ductile iron pipe • cement lined cast iron or ductile iron pipe • A-C pipe • concrete pipe • steel pipe • cast iron O.D. PVC plastic pipe
- Will make cuts through tapping valves from 2" to 12"
- 250 psig (1724 kPa) maximum working pressure at 100° F (38° C)
- 500° F (260° C) maximum working temperature at 150 psig (1034 kPa)

NOTE: The working pressure or temperature rating is reduced accordingly if any attachment, valve or fitting subjected to pressure or temperature during the drilling operation has a maximum working pressure or temperature rating less than that specified above.

**Equipment furnished with each machine:**

- Wooden storage chest (not shown)
- Ratchet handle
- Screw driver
- Double open end wrenches
- Allen wrenches
- Machine to adapter bolts and nuts
- Machine to adapter D-type washers
- Machine to adapter gasket
- Cutting grease
- Instruction manual

**Equipment to be selected:**

- Shell cutters, drills, pilot drills, arbors, and hubs
- Machine adapters
- Power operators

| | |
|---|---|
| Total Shipping Weight | 400 lbs (180 kg) |
| Machine only weight | 270 lbs (120 kg) |

| | Required Equipment for Pipe | | | | |
|---|---|---|---|---|---|
| | **4"** | **6"** | **8"** | **10"** | **12"** |
| **Adapter*** | 83368 | 83369 | 83370 | 83371 | 83372 |
| **Pilot Drill** | 83634 | 83639 | 83675 | 83678 | 83681 |
| **Shell Cutter** | 83203 | 83134 | 83135 | 83140 | 83141 |
| **Cutter Hub** | 83671 | 83673 | 83676 | 83679 | 83682 |

(*MJ only)

# C1-36-99002 Drilling Machine

**MUELLER® C1-36-99002 Drilling Machine - for drilling operations under pressure - 1-1/2" to 18-1/2" inclusive**

- Catalogue number C1-36-99002
- Hand or power operation
- Designed for use on pressurized or dry mainss
- Used to cut 1-1/2" to 18-1/2" holes
- 36" (914 mm) boring bar travel
- Use on cast iron or ductile iron pipe • cement lined cast iron or ductile iron pipe • A-C pipe • concrete pipe • steel pipe
- Will make cuts through tapping valves from 2" to 24"
- 500 psig (3447 kPa) maximum working pressure at 100° F (38° C)
- 500° F (260° C) maximum working temperature at 250 psig (1724 kPa)

NOTE: The working pressure or temperature rating is reduced accordingly if any attachemnt, valve, or fitting subjected to pressure or temperature during the drilling operation has a maximum working pressure or temperature rating less than that specified above.

**Equipment furnished with each machine:**

- Wooden storage chest (not shown)
- Ratchet handle
- T-handle socket wrench
- Four double open end wrenches
- Eight machine to adapter bolts and nuts
- Eight D-type machine to adapter washers
- Machine to adapter gasket
- Cutting grease
- Instruction manual

**Equipment to be selected:**

- Shell cutters, drills, pilot drills, cutter arbors, and cutter hubs
- Machine adapters
- Power operators

| | |
|---|---|
| Total Shipping Weight | 424 lbs (191 kg) |
| Machine only weight | 270 lbs (120 kg) |

| | Required Equipment for Pipe | | | | |
|---|---|---|---|---|---|
| | **4"** | **6"** | **8"** | **10"** | **12"** |
| **Adapter*** | 83368 | 83369 | 83370 | 83371 | 83372 |
| **Pilot Drill** | 83201 | 83056 | 83056 | 83137 | 36338 |
| **Shell Cutter (undersized)** | 83203 | 83134 | 83135 | 83140 | 83141 |
| **Cutter Hub** | 83202 | 63740 | 63739 | 64240 | 33107 |

(*MJ only)

# Power Operators
## (optional equipment)

***H603 Electric Power Operator - Note: This is a non-CSA approved unit***

- Ground fault interrupter included
- Mounts directly to B100-B101-A3-D5-E5
- Can be set to automatically advance boring bar yoke assembly while drilling
- Reversible 35 RPM
- Reversible 3/4 horsepower electric motor
- 115 Volt A.C. or D.C., 10 amps
- Total shipping weight 41 lbs
- Machine only weight 35 lbs

***H604 Air Power Operator***

- Mounts directly to B100-B101-A3-D5-E5 machines without special adapters
- Can be set to automatically advance boring bar yoke assembly while drilling
- Reversible air motor can withdraw tool under power
- Constant feed lubricator (shipped loose)
- 35 RPM maximum free speed
- Air supply: 55 cubic feet of free air per minute at 90 psig
- Total shipping weight 42 lbs
- Machine only weight 37 lbs

***H607 Hydraulic Power Operator***

- Attaches directly to CL-12 machine
- 66 RPM at 8 GMP
- 7-9 GPM flow range
- 1500 - 2000 psig pressure range
- Open centre system type
- 3/8" male pipe connection
- Operator only weight 30 lbs

***H614 Air Power Operator "New" - Replaces H600 and H601***

- For use with CL-12 and C1-36 machines
- Lighter, faster and operates at higher cutting torques than H601
- Replaces machines that may require 580815 adapter to attach to the operator
- Can perform most tapping operations in 2/3 time of the H601
- Comes complete with an in line lubricator and a hinged storage chest
- Total shipping weight 33 lbs
- Operator only weight 28 lbs

# Rental Equipment

**NOTE:** Rental equipment is available from Mueller Canada on a first come, first served basis

**Rental Terms and Conditions**

1. **Minimum Rental Charge:** The maximum charges apply for a period of 10 days, starting the day the customer receives the equipment, excluding weekends and holidays, until the day they ship it back to Mueller Canada. Additional charges after 10 days will be charged on a daily basis.
2. **Transportation Charges:** The customer will pay for transportation charges both ways.
3. **Damage Charges:** The cost of repairing any damage or loss except normal wear or those caused by the transportation company will be added to the rental charges.

# PL-2 Drilling Machine

**NOTE: The Mueller PL-2 Machine DOES NOT have a Controlled Feed Mechanism. Care must be taken when drilling PVC pipe to prevent feeding drills or cutters into the pipe wall too quickly and damaging the pipe.**

**MUELLER® PL-2 Machine - for drilling operations under pressure on plastic pipe - 11/16" and 7/8" cutters inclusive**

- Catalogue number PL-2
- Hand operation
- Designed for use on pressurized or dry mains
- Used to cut plastic pipe only
- Cuts through 3/4" and 1" corporation stops and service saddles
- 7" (178 mm) boring bar travel
- 200 psig (1379 kPa) maximum working pressure
- 150° F (66° C) maximum temperature rating

**NOTE:** Mueller Cutting Grease is Recommended for All Cuts

| Required Equipment for Cuts Into Plastic Pipe | |
|---|---|
| **3/4"** | **1"** |
| 11/16" Shell Cutter 681919 | 7/8" Shell Cutter 681920 |
| Adapter Nipple 507632 | Adapter Nipple 507633 |
| Adapter Nipple Gasket H10893.20 | Adaptre Nipple Gasket 52914 |
| Coupon Removal Tool 681242 | |

# Repair Parts

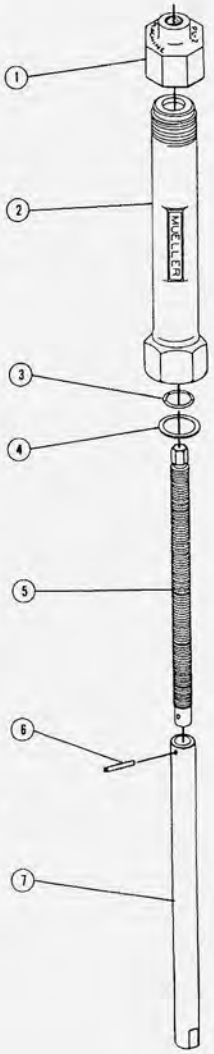


| Item No. | Part Number | Part Name |
|---|---|---|
| 1 | 507144 | Disengagement nut |
| 2 | 509312 | Body |
| 3 | 79344 | O-ring |
| 4 | 58733 | Body washer |
| 5 | 509314 | Boring bar threaded part |
| 6 | 507143 | Boring bar pin |
| 7 | 509313 | Boring bar main part |

NOTE: These illustrations are for parts identification only. DO NOT use these illustrations for assembly or disassembly of machine. MUELLER offers a machine repair service, and field tapping service. Contact MUELLER for details.

**TO ORDER SPECIFY QUANTITY, PART NUMBER AND PART NAME (include catalogue number and model number of machine)**

# Mueller Canada manufactures the most complete line of products for the water works industry...

**Mueller**
**Modern Centurion Hydrants**
Rugged and dependable

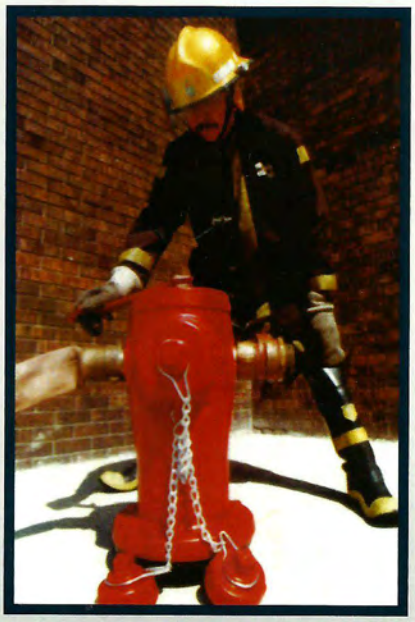

**AWWA and Fire Protection Valves**
Gate Valves - Resilient and metal seated
Butterfly Valves - for above and underground service
Check Valves - AWWA and UL/ULC/FM
Plug Valves - Quarter turn, resilient seat, round port
Indicator Posts

**Century, B-50-B, & Monitor**
Fire hydrants designed for reliable, long term performance

**Service Line Products made to AWWA Specifications**
Corporation Stops
Ball Valves
Curb Valves
Oriseal Valves
Couplings and adapters with a variety of end connections to suit all kinds of service pipe

**Mueller Saddles for Long Reliable Service Life**

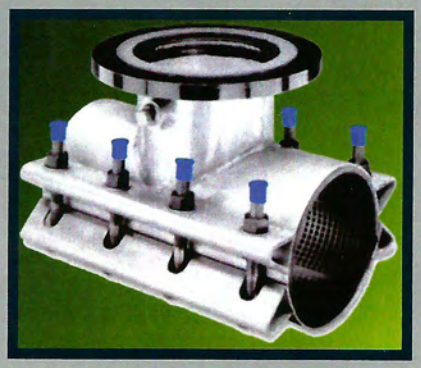

**Stainless Steel Tapping Sleeves**

Mueller Canada

www.muellercanada.com

MC053-12/13