NOTES:

1. APPLY ADHESIVE LOCTITE 680 OR EQUIVALENT.
2. TORQUE TO 20-22 FT. LBS.

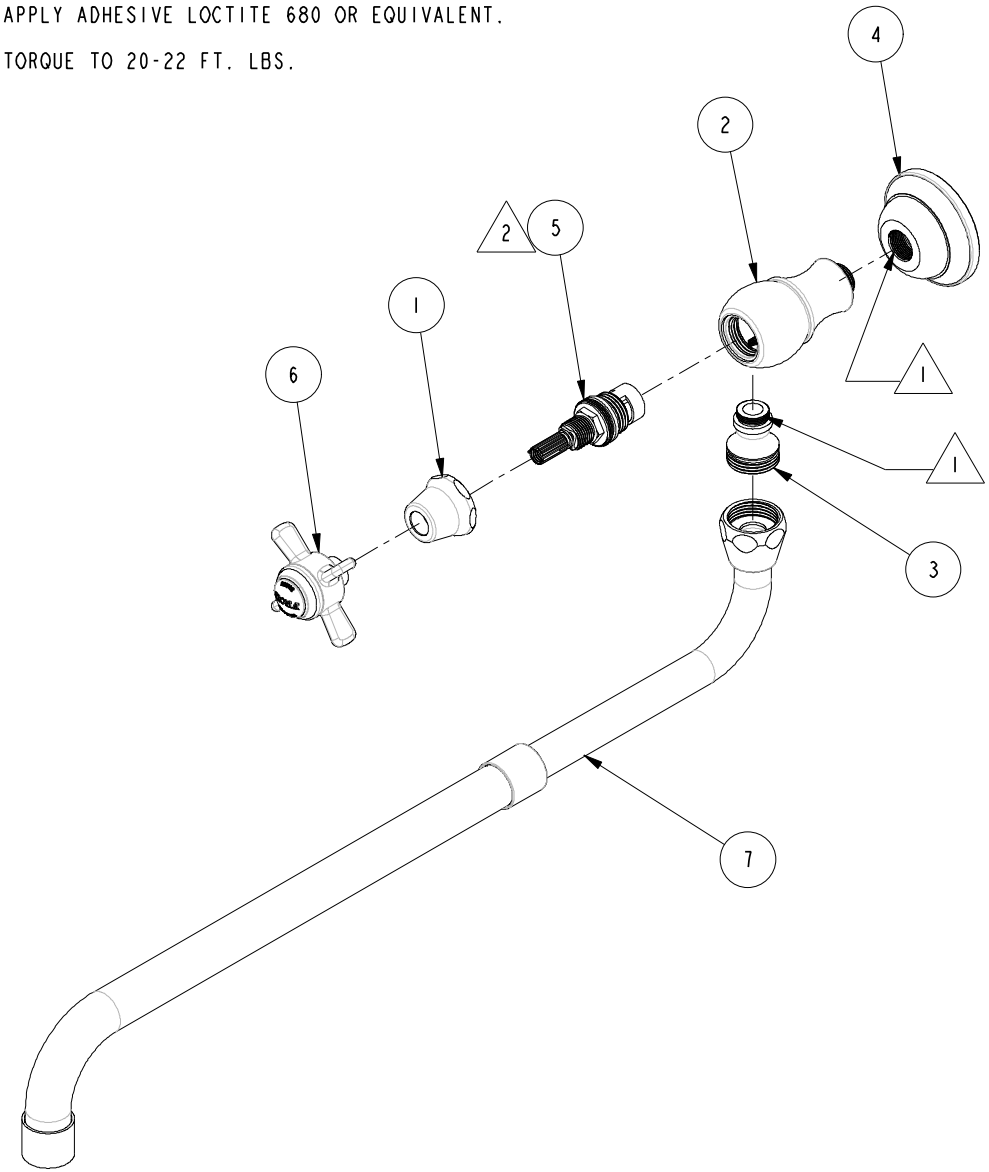

BILL OF MATERIAL (CURRENT LEVEL)

ITEM	PT/ASSY	DESCRIPTION	TYPE	QTY.
1	10331	BONNET FOR 933, 934	PART	1
2	10695	CARTRIDGE BODY	PART	1
3	10965	RISER FOR POT FILLER	PART	1
4	11076	BASE POT FILLER	PART	1
5	1-002	W/S CARTRIDGE - HOT	PART	1
6	2-115	THIN BLADE X - HANDLE COLD	ASSEMBLY	1
7	2-275	TELESCOPIC SPOUT ASM	ASSEMBLY	1

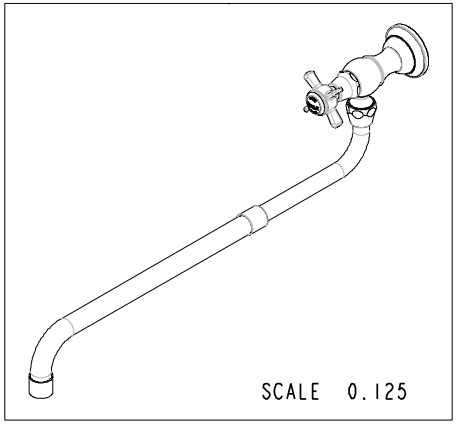

COPYRIGHT 2005 BRASSTECH, INC. THESE DRAWINGS AND THE DESIGNS DEPICTED HEREIN ARE THE PROPRIETARY PROPERTY OF BRASSTECH. ANY USE OR REPRODUCTION IS SUBJECT TO THE EXPRESS APPROVAL OF BRASSTECH. UNAUTHORIZED USE IS STRICTLY PROHIBITED. ALL RIGHTS RESERVED.

BRASSTECH INCORPORATED
2001 E. CARNEGIE AVE.
SANTA ANA, CA 92705
(949) 417-5207

POT FILLER - THIN BLADE

ASSY. NO. 949

SCALE 0.275 | REF. - | SHEET 1 OF 2

REV	REV DESC	DATE
B	EO-0534	07/14/05
A	EO-0165	05/28/03
-	RELEASED	03/12/03

SPECIFICATION DWG

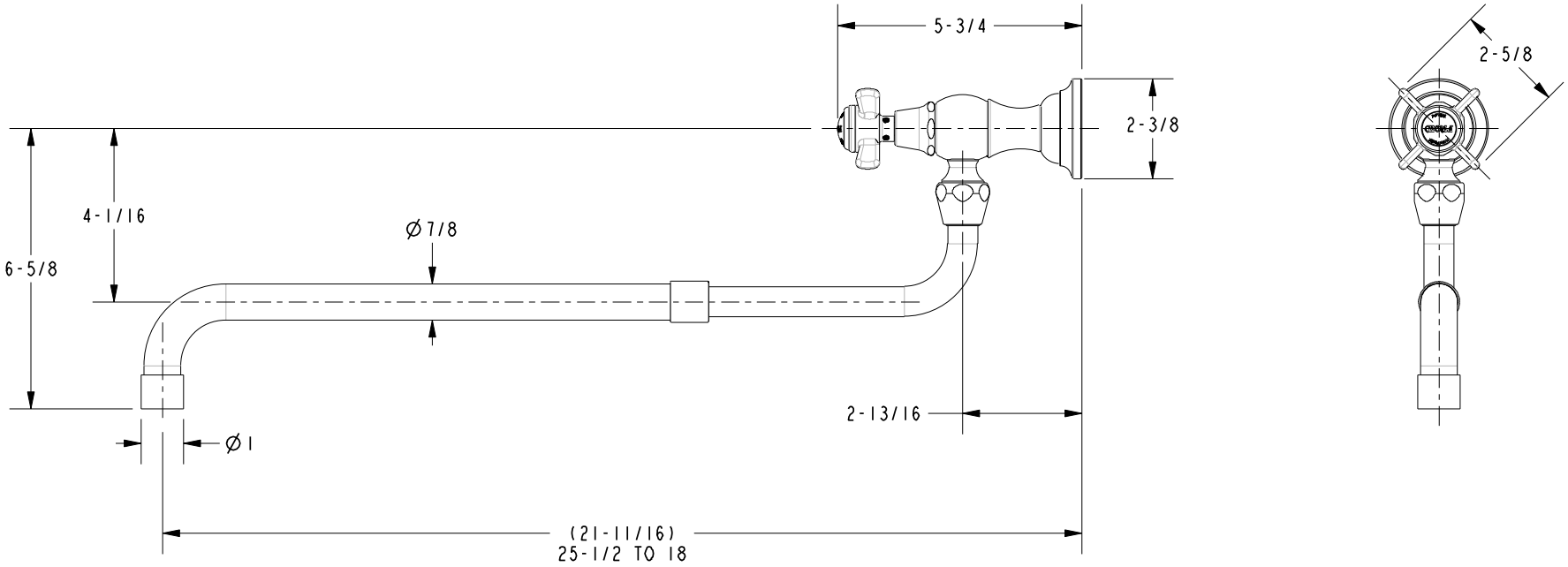

DIMENSIONS ARE IN INCHES AND AN APPROXIMATION OF A TYPICAL INSTALLATION

COPYRIGHT 2005 BRASSTECH, INC. THESE DRAWINGS AND THE DESIGNS DEPICTED HEREIN ARE THE PROPRIETARY PROPERTY OF BRASSTECH. ANY USE OR REPRODUCTION IS SUBJECT TO THE EXPRESS APPROVAL OF BRASSTECH. UNAUTHORIZED USE IS STRICTLY PROHIBITED. ALL RIGHTS RESERVED.

BRASSTECH INCORPORATED
2001 E. CARNEGIE AVE.
SANTA ANA, CA 92705
(949) 417-5207

DWG NO.	REV
949	B

SCALE	REF.	SHEET
0.250	-	2 OF 2