CALEFFI
Hydronic Solutions

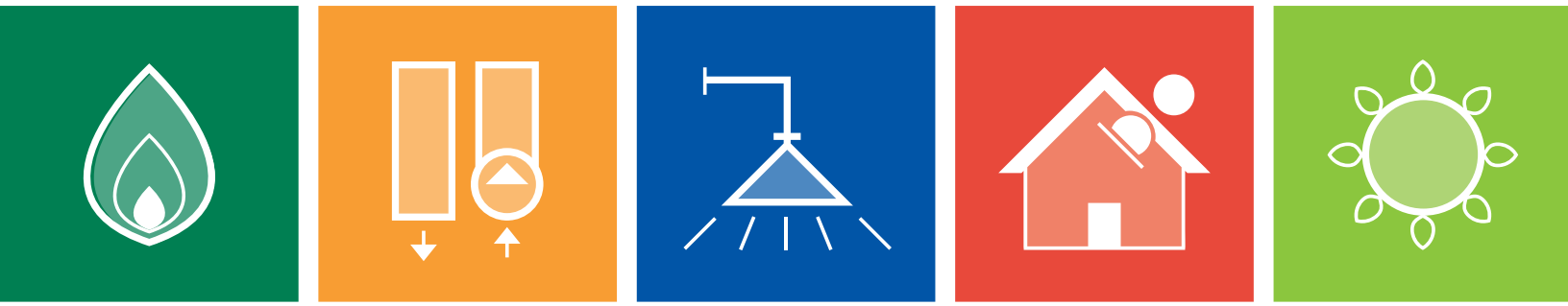

2019 PLUMBING AND HYDRONICS CATALOG

INNOVATIVE HYDRONIC AND PLUMBING COMPONENTS

Caleffi Hydronic Solutions, a leader in state-of-the-art engineered solutions, manufactures and supplies high-quality components for hydronic heating and cooling, plumbing, heat metering and renewable energy systems, for domestic, commercial and industrial buildings. Caleffi, an Italian based company, is a name recognized around the world for innovative solutions and superior performing products that help customers live comfortably and economically, while softening their impact on the environment.

Heating & cooling | Control | Plumbing | Heat systems | Renewables

CALEFFI
Hydronic Solutions

WHO WE ARE

Since 1961, Caleffi has been a leading Italian manufacturer of high-quality components for hydronic heating and cooling, plumbing, heat metering and renewable systems, for residential and commercial applications.

PRODUCTION

Our three production sites are located in northern Italy. In 1 year, our techno polymer stamping facility delivers 120 million finished products and we machine 200 million pieces, handling over 13,000 tons of brass.

LOGISTICS

A fully automated vertical warehouse (MAV) optimizes service to our export and domestic customers, avoiding human mistakes. We can store around 14,000 pallets in this facility.

R&D

Our CUBOROSSO (Red Cube) is a state of art building completely dedicated to our team of engineers and specialized technicians where we analyze and compare product performances and develop new designs. All tests are conducted using alternative energy sources solar, biomass and geothermal.

- North American HQ facilities in Milwaukee, WI includes Customer Service, Tech Support, Administrative and Warehouse Distribution.
- 30+ independent sales offices throughout North America.
- 35,000 SQ FT. facility built in 2007 with room for future expansions.
- Entire facility has radiant heat with snow melt systems installed at entry doors.
- Light assembly and packaging of zone valves, manifolds, mixing valves, balancing valves and other components.
- R&D Lab for product evaluation and concept development.

Caleffi North America, Inc.
3883 W Milwaukee Rd, Milwaukee, WI 53208
Tel: 414-238-2360 / Fax: 414-238-2366
www.caleffi.com

FOLLOW US ON

TIME TO GRAB A COFFEE AND LEARN

You are invited to join us for our monthly webinar series, Coffee with Caleffi™. The complimentary technical training webinars are intended for contractors, designers and wholesalers. A *Certificate of Attendance* is emailed to attendees following the webinar for continuing education consideration.

Register by scanning the QR code below. Missed a webinar? No problem! Our webinars are available 24/7 on YouTube for your convenience.

Visit
www.caleffi.com
to View Upcoming Schedule

Coffee with
CALEFFI
Technical Training Webinar

A JOURNAL OF DESIGN INNOVATION

***idronics*™ is a complimentary educational journal series for hydronic, plumbing and renewable energy professionals to aid them in system design, component application and selection. The popular and frequently referenced publication is written by engineers and oriented towards innovative design techniques with a commitment to continuous education of North American professionals.**

Interested in receiving your own copy of our popular *idronics* journal?
Visit www.caleffi.us to be added to the mailing list or scan QR code below.

Register today

idronics

Watch for the **NEW** look this July

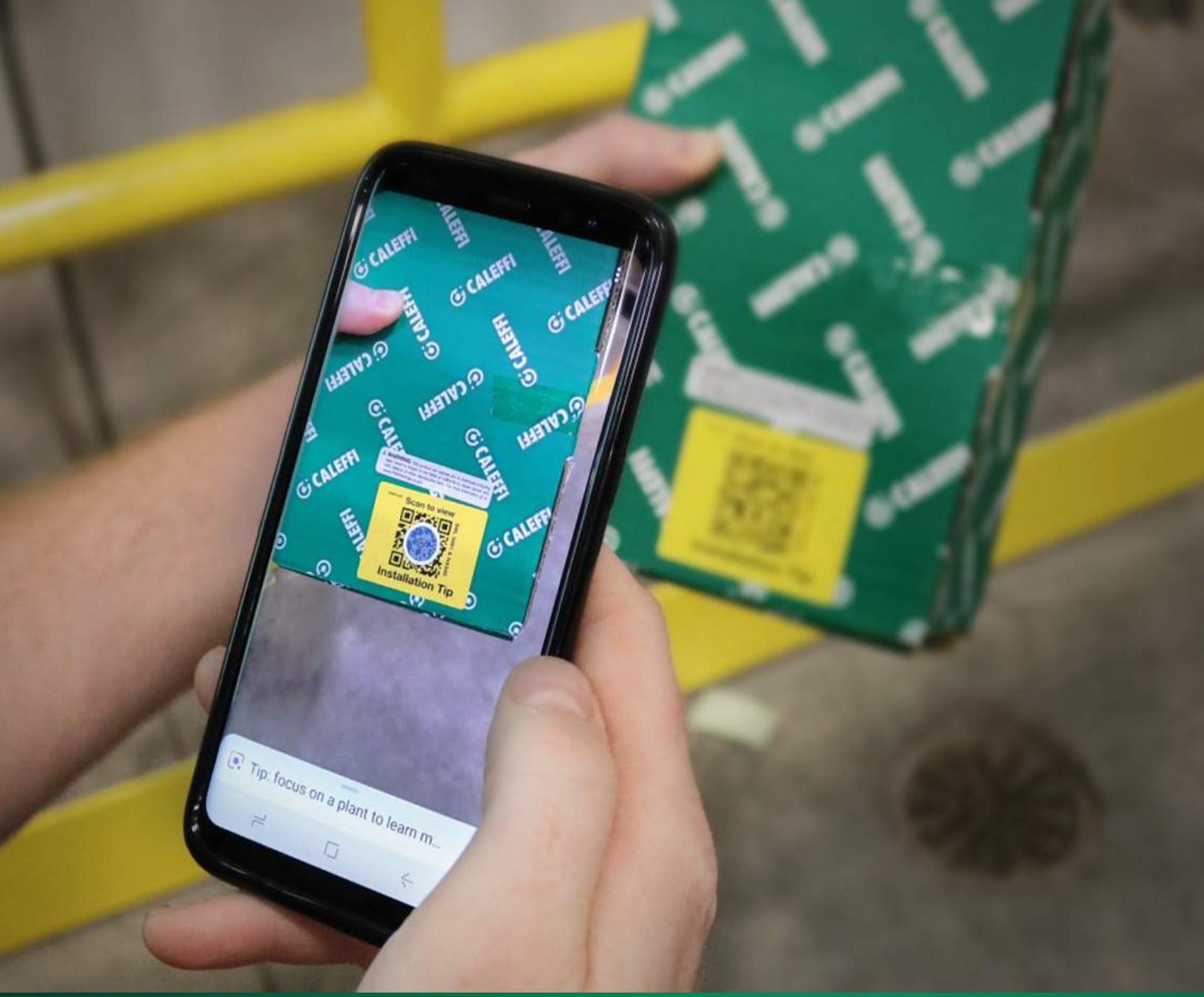

EASY-ACCESS INSTALLATION TIP VIDEOS

Whether you're a contractor in the mechanical room looking for installation pointers or a wholesaler explaining a component at the counter, Caleffi's Installation Tip videos just made your job easier!

Simply scan the QR Code easily identified with a bright-yellow label placed on our product boxes to access the brief YouTube videos.

Heating & cooling | Control | Plumbing | Heat systems | Renewables

Scan to view

Installation Tip

Pioneers Guiding the Industry

Providing state-of-the-art engineered solutions for today's world

- Creating innovative, superior performance products that help customers live comfortably and economically, while softening their impact on the environment.
- Continually expanding our product portfolio to meet industry needs.

Components for today's modern hydronic systems

Heating & cooling

Hydronics Product Selector

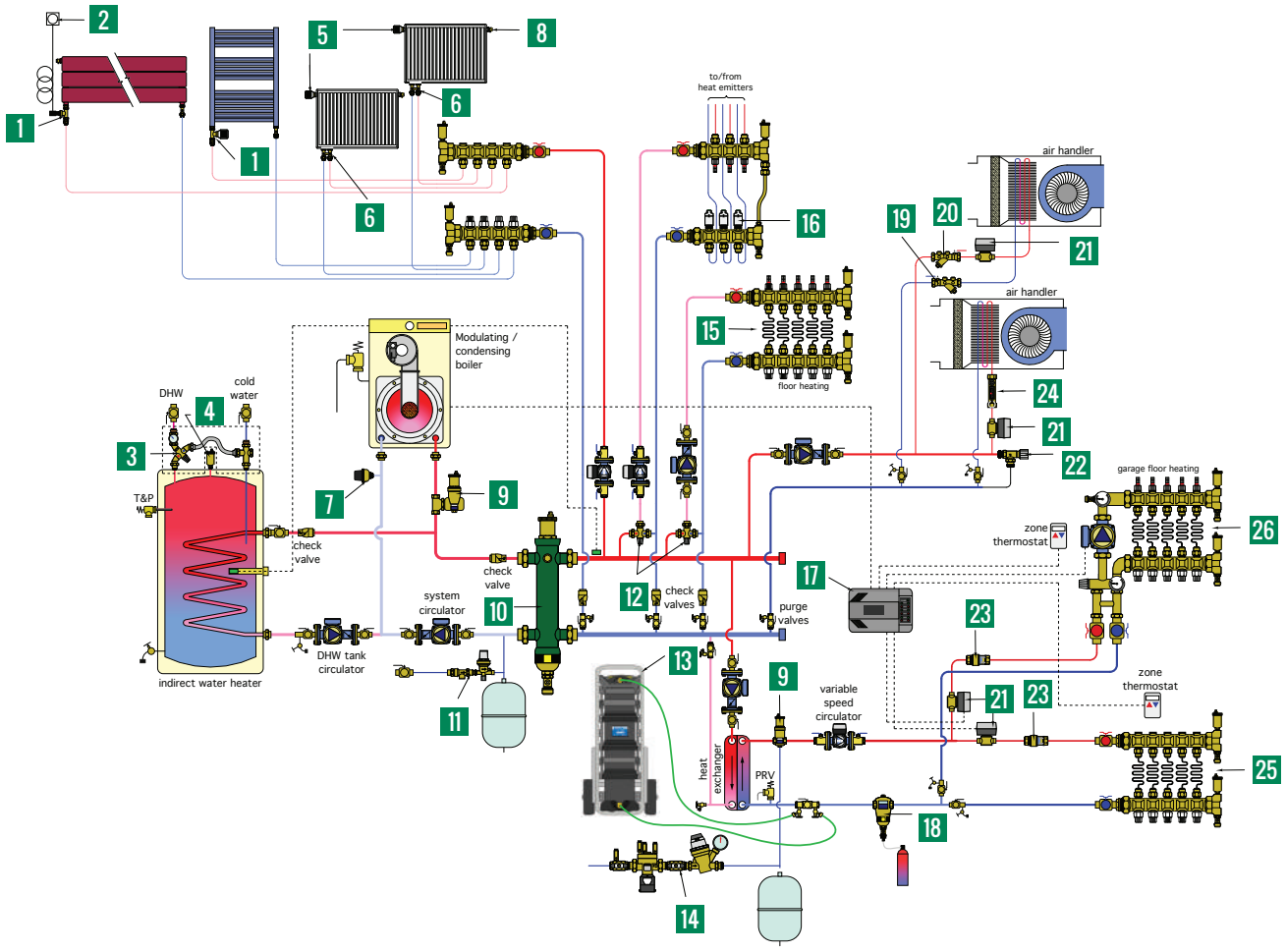

Key	Part Number	Description	Catalog Section
1	221500*	Radiator valve	3
2	472000*	Remote wall sensor	3
3	520510AX	TankMixer™ thermostatic mixing assembly	6A
4	NA502640A	PLUMBVENT™ low lead automatic air vent	6C
5	200000*	Radiator valve control head	3
6	301040*	Radiator connection valves	3
7	626600A*	Paddle flow switch	8
8	508013A*	Hygroscopic air vent	2
9	551706A	DISCAL® air separator, rotating collar	2
10	549506A	SEP4™ hydraulic, air, dirt, mag separator	1
11	573002A	AutoFill™ combo ASSE 1012	7
12	521619A*	MixCal™ thermostatic mixing valve	6A
13	NA570924*	HydroFill™ water treatment unit	7
14	574151A	AutoFill™ combo ASSE 1013	7
15	6686E5S1A*	TwistFlow™ manifold	5
16	656344*	TwisTop™ thermo-electric actuator	3&5
17	ZVR103	Z-one™ valve relay control	4
18	NA546306T	DIRTMAG® chemical kit	2
19	121161A*	FlowCal™ automatic balancing valve	6B
20	120161A*	Y-strainer	6B
21	Z55P	Z-one™ valve assembly	4
22	519600A*	DP bypass valve	8
23	127361AF*	FlowCal™ automatic balancing valve	6B
24	132662A	QuickSetter™ balancing valve	6B
25	6636E5A*	Manifold	5
26	1725E1AHE*	Manifold mixing station	5

Plumbing Product Selector

Commercial

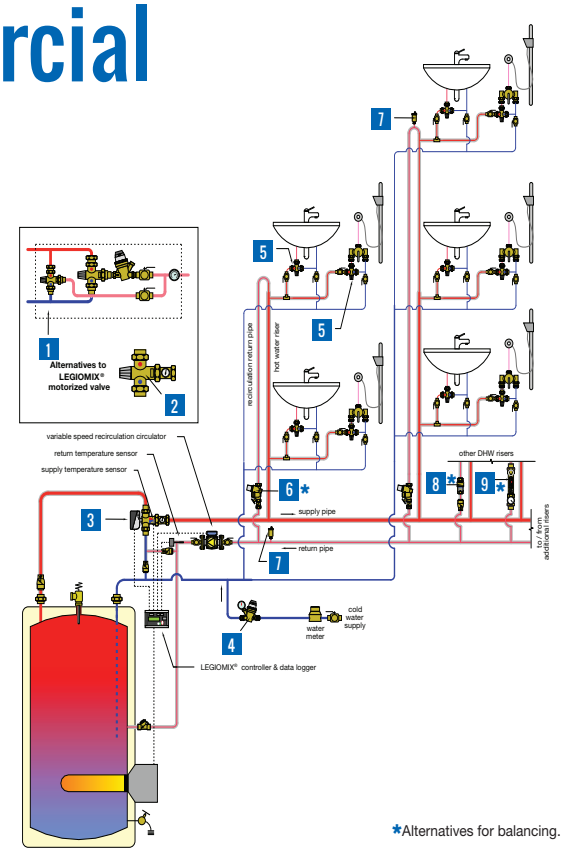

*Alternatives for balancing.

Key	Part Number	Description	Catalog Section
1	**NA52367HL***	High-Low mixing valve assy ASSE 1017	**6A**
2	**523177A***	High-flow mixing valve ASSE 1017	**6A**
3	**600074A**	LEGIOMIX® electronic mixing valve ASSE 1017	**6A**
4	**535991HA**	Pressure reducing valve ASSE 1003	**6C**
5	**521333A**	Anti-scald mixing valve ASSE 1070	**6A**
6	**116151AC**	ThermoSetter™ thermal balancing valve	**6B**
7	**NA502640A**	PLUMBVENT™ low lead automatic air vent	**6C**
8	**127356AF***	FlowCal™ automatic balancing valve	**6B**
9	**132537AFC**	QuickSetter+™ manual balancing valve	**6B**

Plumbing Product Selector

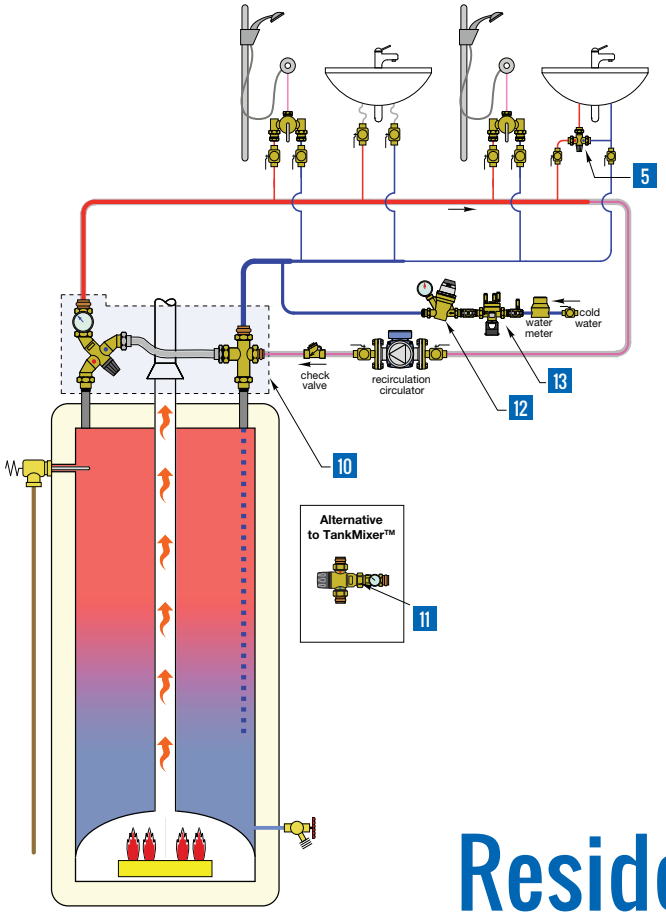

Residential

Key	Part Number	Description	Catalog Section
5	**521333A**	Anti-scald mixing valve ASSE 1070	**6A**
10	**520516AX**	TankMixer™ mixing valve assy ASSE 1017	**6A**
11	**521616A**	MixCal™ mixing valve ASSE 1017	**6A**
12	**535360HA**	Pressure reducing valve ASSE 1003	**6C**
13	**574050A**	RPZ backflow preventer ASSE 1013	**6C**

HYDRAULIC SEPARATORS

This diagram is for illustration purposes only

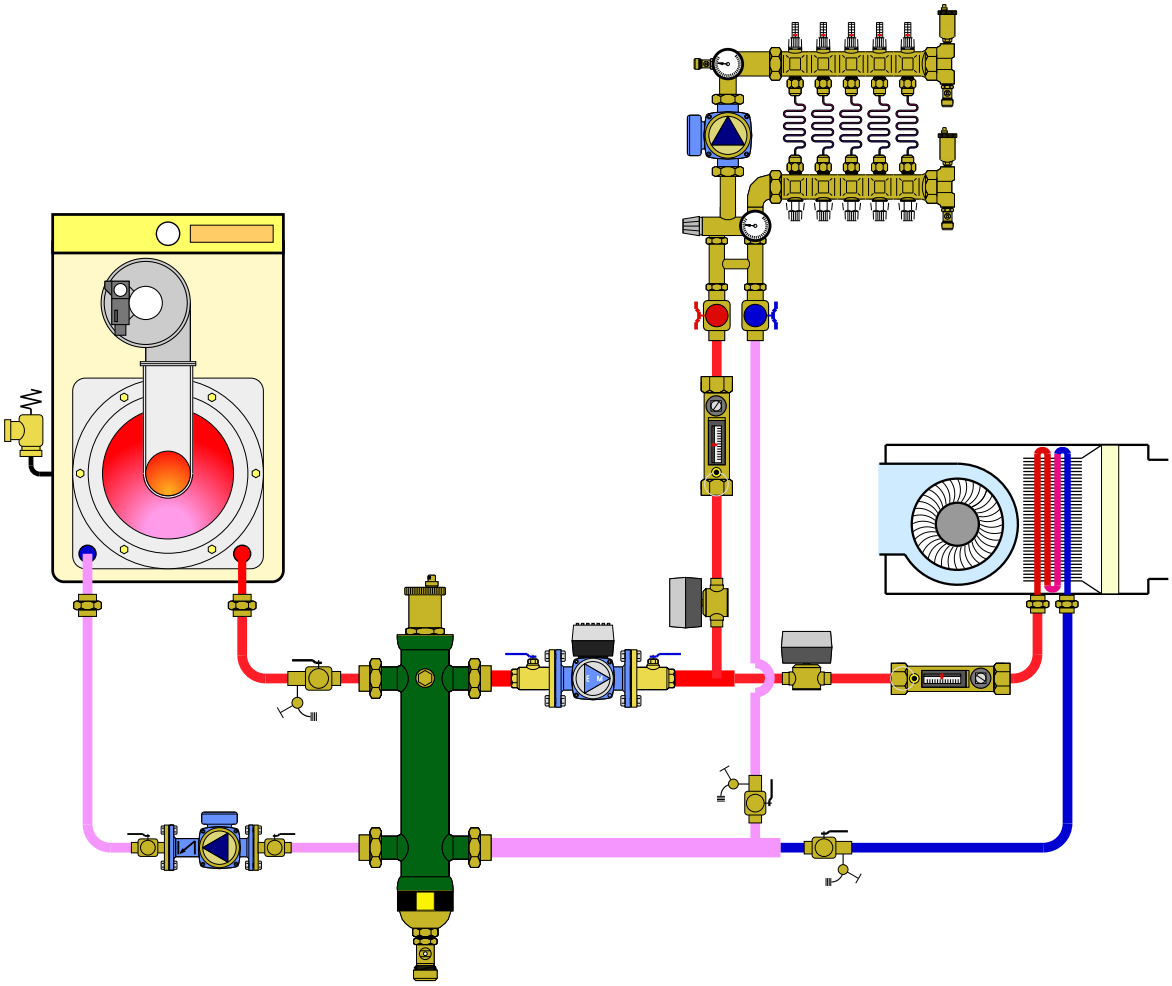

PRODUCTS INCLUDED IN SECTION

- 4-in-1 hydraulic separators
- Hydraulic separators
- Hydraulic separators-manifolds
- Hydraulic separator accessories

4-IN-1 HYDRAULIC SEPARATORS

5495 SEP4™

Combination 1. air, 2. hydraulic and 3. dirt separation, plus 4. magnetic separation.
Epoxy resin coated steel body.
HDPE internal coalescing element, removable for cleaning.
Pre-formed insulation.
Thermowell tap: 1/2" straight female.
Max. working pressure: 150 psi.
Working temperature range: 32—210°F.
Working temp. w/o insulation: 32—230°F.

Code	Description		Lbs	USD
549596A	1" sweat union		15	**1,408.00**
549506A	1" NPT female union		15	**1,464.00**
549566A	1" press union		15	**1,540.00**
549597A	1 ¼" sweat union		19	**1,716.00**
549507A	1¼" NPT female union		19	**1,776.00**
549567A	1¼" press union		19	**1,952.00**
549598A	1½" sweat union		27	**2,242.00**
549508A	1½" NPT female union		27	**2,322.00**
549568A	1½" press union		27	**2,534.00**
549599A	2" sweat union		29	**2,570.00**
549509A	2" NPT female union		29	**2,636.00**
549569A	2" press union		29	**2,960.00**
549506US*	1" no tailpieces	NEW	13	**1,200.00**
549507US*	1¼" no tailpieces	NEW	17	**1,400.00**
549508US*	1½" no tailpieces	NEW	25	**1,650.00**
549509US*	2" no tailpieces	NEW	27	**2,000.00**

See fitting selection table in Section 8.

NA549 SEP4™ ASME

Combination 1. air, 2. hydraulic and 3. dirt separation, plus 4. magnetic separation.
Epoxy resin coated steel body.
Stainless steel internal coalescing mesh.
Three neodymium magnets.
Complete with:
- automatic air vent (code 501502A).
- air vent shut-off valve (code NA39589).
- drain valve (code NA59600).

ANSI 150 flange connections.
Thermometer pockets (NPT):
½" inlet/outlet flanges, ¾" front center
Max. working pressure: 150 psi.
Vessel temperature range: 32—270°F.
Particle separation capacity: to 5 µm (0.2 mil).
ASME U-stamp tagged and registered with the National Board of Boiler and Pressure Vessel Inspectors; CRN registered up to 10". Consult factory for 12"— 14".

Code	Description	Lbs	USD
NA549200AM	8" ANSI flange ASME & CRN	530	**29,373.00**
NA549250AM	10" ANSI flange ASME & CRN	740	**39,796.00**
NA549300AM	12" ANSI flange ASME	1,110	**52,372.00**
NA549350AM	14" ANSI flange ASME	1,550	**61,743.00**

NA549 SEP4™

Combination 1. air, 2. hydraulic, 3. dirt separation, plus 4. magnetic separation.
Epoxy resin coated steel body.
Stainless steel internal coalescing mesh.
Pre-formed insulation on 2"— 4" sizes.
One neodymium magnet.
Complete with:
- automatic air vent (code 501502A).
- air vent shut-off valve (code NA39589).
- 1" drain valve NA39753 (2"— 4" sizes)
- 1¼" drain valve NA39588 (5" — 6" sizes).

ANSI 150 flange connections.
Max. working pressure: 150 psi.
Vessel temperature range: 32—220°F.
Working temp. w/o insulation: 32—270°F.
Particle separation capacity: to 5 µm (0.2 mil).

Code	Description	Lbs	USD
549552A	2" ANSI flange	76	**6,261.00**
549562A	2½" ANSI flange	82	**6,672.00**
549582A	3" ANSI flange	112	**8,349.00**
549510A	4" ANSI flange	120	**9,350.00**

Code	Description	Lbs	USD
NA549052AM	2" ANSI flange ASME & CRN	76	**7,288.00**
NA549062AM	2½" ANSI flange ASME & CRN	82	**7,824.00**
NA549082AM	3" ANSI flange ASME & CRN	112	**9,684.00**
NA549102AM	4" ANSI flange ASME & CRN	120	**10,212.00**
NA549120AM*	5" ANSI flange ASME & CRN	220	**14,071.00**
NA549150AM*	6" ANSI flange ASME & CRN	235	**16,970.00**

* without insulation
NA prefix indicates ASME U-stamp tagged and registered with the National Board of Boiler and Pressure Vessel Inspectors; CRN registered.

In the SEP4™ hydraulic separators ferrous impurities are captured by a concentrated magnetic field created by a stack of nedimium magnetic rods, rare-earth magnets positioned inside a brass dry-well which is below the flow stream. Non-magnetic dirt particles are separated by colliding with an internal element in the flow stream and settling to the bottom. The deep collection chamber keeps the dirt from re-entering the flow stream. The dirt and ferrous impurities are flushed out even while the system is still running, by removing the magnets and opening the purge valve.

	FLOW RATE - UNION CONNECTIONS			
Size	1"	1¼"	1½"	2"
GPM	11	18	26	37
Gallons	0.5	0.7	1.3	3.5

	FLOW RATE - FLANGED CONNECTIONS									
Size	2"	2½"	3"	4"	5"	6"	8"	10"	12"	14"
GPM	60	80	124	247	300	484	792	1330	1850	2500
Gallons	4.0	4.0	8.0	8.0	23	23	95	175	255	450

HYDRAULIC SEPARATORS

548 Hydro Separator

Hydraulic separator.
Epoxy resin coated steel body.
300 series stainless steel internal baffle.
Pre-formed insulation.
Thermowell tap: 1/2" straight female
Max. working pressure: 150 psi.
Working temperature range: 32—210°F.
Working temp. w/o insulation: 32—250°F.

Code	Description		Lbs	USD
548006A	1" NPT female union		13	**1,064.00**
548066A	1" press union		13	**1,140.00**
548096A	1" sweat union		13	**1,008.00**
548007A	1¼" NPT female union		17	**1,276.00**
548067A	1¼" press union		17	**1,452.00**
548097A	1¼" sweat union		17	**1,216.00**
548008A	1½" NPT female union		25	**1,672.00**
548068A	1½" press union		25	**1,884.00**
548098A	1½" sweat union		25	**1,592.00**
548009A	2" NPT female union		27	**1,948.00**
548069A	2" press union		27	**2,380.00**
548099A	2" sweat union		27	**1,860.00**
548006US	1" no tailpieces	NEW	11	**800.00**
548007US	1¼" no tailpieces	NEW	15	**900.00**
548008US	1½" no tailpieces	NEW	23	**1,000.00**
548009US	2" no tailpieces	NEW	25	**1,100.00**

*See fitting selection table in Section 8.

NA548 Hydro Separator ASME

Hydraulic separator.
Epoxy resin coated steel body.
Without insulation.
Complete with:
automatic air vent (code 501502A).
shut-off valve (code NA39589).
drain valve (code NA59600).
ANSI 150 flange connections.
Thermometer pockets (NPT):
½" inlet/outlet flanges, ¾" front center
Max. working pressure: 150 psi.
Working temperature range: 32—270°F.
Baffle plates for all sizes: 304SST
ASME U-stamp tagged and registered with the National Board of Boiler and Pressure Vessel Inspectors; Consult factory for CRN sizes 12" — 14".

Code	Description	Lbs	USD
NA548200A	8" ANSI flange ASME & CRN	520	**19,692.00**
NA548250A	10" ANSI flange ASME & CRN	730	**27,799.00**
NA548300A	12" ANSI flange ASME	1,100	**33,645.00**
NA548350A	14" ANSI flange ASME	1,540	**53,657.00**

NA548 Hydro Separator

Hydraulic separator.
Epoxy resin coated steel body.
Pre-formed insulation on 2"— 4" sizes.
Complete with:
automatic air vent (code 501502A).
shut-off valve (code NA39589).
drain valve (code NA39588).
ANSI 150 flange connections.
Max. working pressure: 150 psi.
Vessel temperature range: 32—220°F.
Vessel temp. w/o insulation: 32—270°F.
Baffle plates for all sizes: 304SST

Code	Description	Lbs	USD
548052A	2" ANSI flange	75	**4,136.00**
548062A	2½" ANSI flange	82	**4,407.00**
548082A	3" ANSI flange	112	**5,513.00**
548102A	4" ANSI flange	117	**6,170.00**

Code	Description	Lbs	USD
NA548052A	2" ANSI flange ASME & CRN	75	**5,442.00**
NA548062A	2½" ANSI flange ASME & CRN	82	**5,852.00**
NA548082A	3" ANSI flange ASME & CRN	112	**7,080.00**
NA548102A	4" ANSI flange ASME & CRN	117	**7,487.00**
NA548120A*	5" ANSI flange ASME & CRN	220	**10,459.00**
NA548150A*	6" ANSI flange ASME & CRN	231	**12,691.00**

NA prefix indicates ASME U-stamp tagged and registered with the National Board of Boiler and Pressure Vessel Inspectors; CRN registered.
*Without insulation

NA549 HydroCal™ ASME

Combination 1. air, 2. hydraulic and 3. dirt separation.
Epoxy resin coated steel body.
Stainless steel internal coalescing mesh.
Pre-formed insulation on 2"— 4" sizes.
Complete with: automatic air vent, air vent shut-off valve, drain valve.
ANSI 150 flange connections.
Max. working pressure: 150 psi.
Vessel temperature range: 32—220°F.
Working temp. w/o insulation: 32—270°F.
Particle separation capacity: to 5 µm (0.2 mil).
Consult factory for CRN sizes 12"— 14".

Code	Description		Lbs	USD
NA549052A	2" ANSI flange ASME & CRN		73	**7,074.00**
NA549062A	2½" ANSI flange ASME & CRN		79	**7,609.00**
NA549082A	3" ANSI flange ASME & CRN		108	**9,202.00**
NA549102A	4" ANSI flange ASME & CRN		117	**9,730.00**
NA549120A*	5" ANSI flange ASME & CRN		190	**14,071.00**
NA549150A*	6" ANSI flange ASME & CRN		231	**16,970.00**
NA549200A*	8" ANSI flange ASME & CRN		520	**29,373.00**
NA549250A*	10" ANSI flange ASME & CRN		730	**39,796.00**
NA549300A*	12" ANSI flange ASME		1,100	**52,372.00**
NA549350A*	14" ANSI flange ASME	NEW	1,540	**61,743.00**

*Without insulation

HYDRAULIC SEPARATORS-MANIFOLDS

5599 HydroLink™

Hydraulic separator + distribution manifold. 2+0 with built-in mounting.
Steel body with pre-formed insulation.
Complete with automatic air vent (code 502043A) and drain valve (code 538402 FD).
Max. working pressure: 100 psi.
Working temperature range: 32—230°F.
Outlet center dimension: 125 mm.
Compatible with 165, 166, 167 series HydroMixer™.

Code	Description	Lbs	USD
559920A	1" FNPT primary, 1" MNPT secondary (2)	16	**1,325.00**

5599 HydroLink™

Hydraulic separator + distribution manifold. 2+2 with angle mounting brackets.
Steel body with pre-formed insulation.
Complete with automatic air vent (code 502043A) and drain valve (code 538402 FD).
Max. working pressure: 100 psi.
Working temperature range: 32—230°F.
Outlet center dimension: 125 mm.
Compatible with 165, 166, 167 series HydroMixer™.

Code	Description	Lbs	USD
559922A	1" FNPT primary, 1" MNPT secondary (4)	29	**1,628.00**

5599 HydroLink™

Hydraulic separator + distribution manifold. 2+1 with built-in mounting.
Steel body with pre-formed insulation.
Complete with automatic air vent (code 502043A) and drain valve (code 538402 FD).
Max. working pressure: 100 psi.
Working temperature range: 32—230°F.
Outlet center dimension: 125 mm.
Compatible with 165, 166, 167 series HydroMixer™.

Code	Description	Lbs	USD
559921A	1" FNPT primary, 1" MNPT secondary (3)	16	**1,362.00**

5599 HydroLink™

Hydraulic separator + distribution manifold. 3+1 with angle mounting brackets.
Steel body with pre-formed insulation.
Complete with automatic air vent (code 502043A) and drain valve (code 538402 FD).
Max. working pressure: 100 psi.
Working temperature range: 32—230°F.
Outlet center dimension: 125 mm.
Compatible with 165, 166, 167 series HydroMixer™.

Code	Description	Lbs	USD
559931A	1" FNPT primary, 1" MNPT secondary (4)	39	**1,956.00**

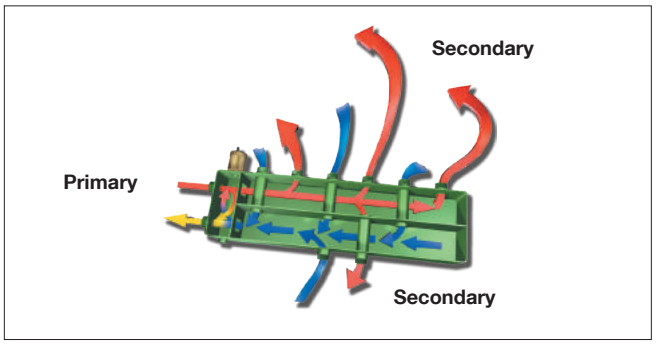

Maximum recommended flow rates at connections:

Branches	Primary	Secondary Total
2+0	9 gpm	22 gpm
2+1	9 gpm	22 gpm
2+2	11 gpm	26 gpm
3+1	11 gpm	26 gpm

Application diagram

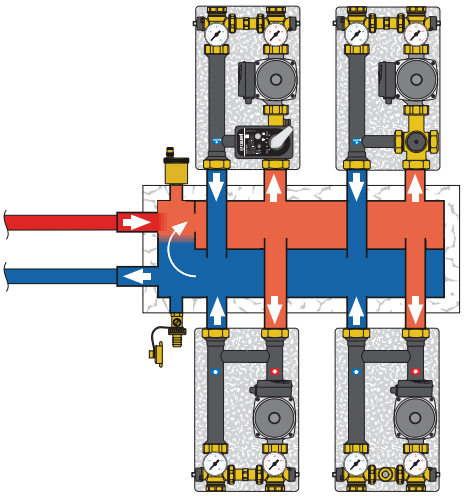

HYDRAULIC SEPARATOR ACCESSORIES

501 MAXCAL™

Replacement air vent for Hydro Separator
Fits NA548 Series and NA549 Series.
Brass body and cover, stainless steel internal components.
Extra high discharge capacity.
Max. working pressure: 230 psi.
Max. discharge pressure: 90 psi.
Max. working temperature: 250°F.
Discharge top thread: ⅜" female.

Code	Description	Lbs	USD
501502A	¾" FNPT	7	**448.00**

5020 MINICAL™

Replacement high capacity air vent for 5599 HydroLink™.
Automatic air vents.
Brass body.
Hygroscopic safety air vent cap.
Max. working pressure: 150 psi.
Max discharge pressure: 60 psi.
Max. working temperature: 250°F.

Code	Description	Lbs	USD
502043A	½" MNPT	0.6	**35.40**

5023 VALCAL™

Replacement high capacity air vent with service check valve fits Hydro Separator 548 series.
Brass body.
Max. working pressure: 150 psi.
Max. discharge pressure: 60 psi.
Max. working temperature: 250°F.

Code	Description	Lbs	USD
502343A	½" MNPT	0.5	**71.80**

Replacement drain valve fits Hydro Separator 548 series and HydroLink™ 559 series.
Brass body.
¾" garden hose thread with cap.
Max. working pressure: 150 psi.
Max. working temperature: 250°F.

Code	Description	Lbs	USD
538402 FD	½" NPT x ¾" GHT	0.3	**21.50**

Drain ball valves fit HydroCal™, Hydro Separators, DISCAL®, DISCALDIRT® and DIRTCAL®.
Brass body.
Max. working pressure: 150 psi.
Max. working temperature: 365°F.

Code	Description	Lbs	USD
NA39589	¾" FNPT w/T-handle, air vent isolate	0.8	**44.30**
NA39753	1" FNPT w/Lever, drain	0.7	**60.40**
NA39588	1¼" FNPT w/Lever, drain	1	**101.00**
NA59600	2" FNPT w/Lever, drain	4	**216.00**

Temperature pocket well fits 1", 1¼", 1½" & 2" 548 / 5495 Hydro Separators.
1 ¾" pocket length.
Inside thread: 20 x1.0 mm.

Code	Description	Lbs	USD
694045	½" straight thread	0.2	**27.20**
F50055	Sealing washer	0.1	**2.30**
NA10426	Sensor holding grommet	0.1	**6.20**
NA10425	Kit containing above 3 items	0.4	**36.50**

Double male nipple.

Code	Description	Lbs	USD
R41447	¾" NPT x ¾" NPT x 2"	0.3	**39.30**

Magnetic/drywell assembly for SEP4™.

Code	Description	Lbs	USD
F0000435	Fits 2" and 2½"	3	**204.00**
49684A	Fits 3"— 6"	3	**459.00**
F0000349	Fits 8" to 14"	3	**867.00**

AIR AND DIRT SEPARATION AND AIR VENTS

This diagram is for illustration purposes only

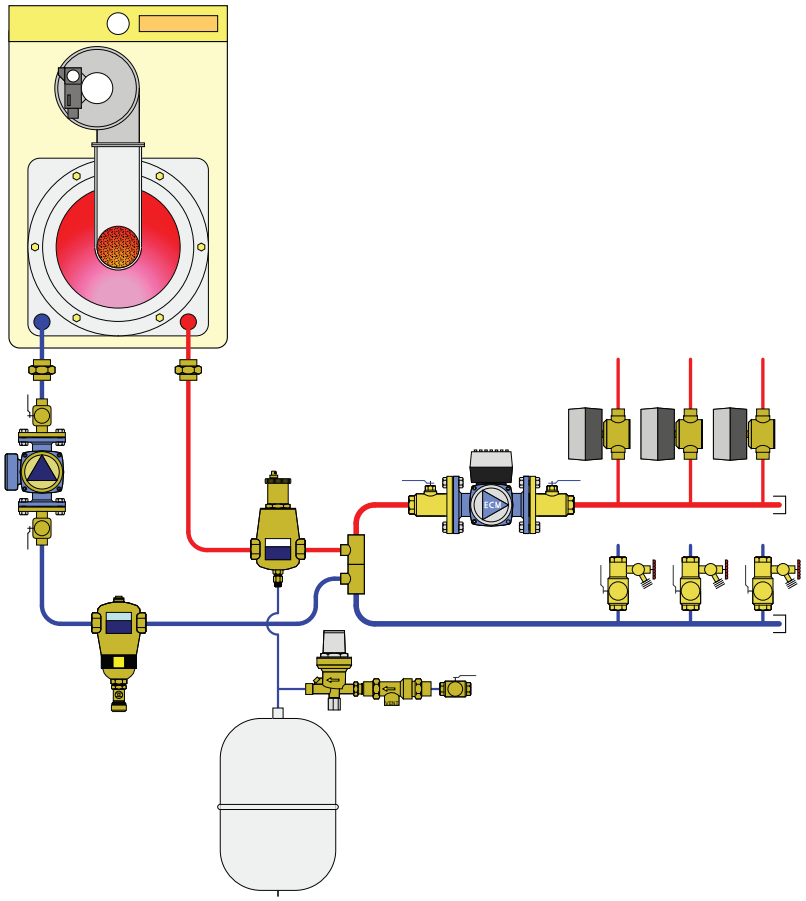

PRODUCTS INCLUDED IN SECTION

- Automatic and manual air vents
- Air separators
- Dirt separators
- Air and dirt separators
- Dirt and magnetic dirt separators
- Magnetic dirt separators
- Accessories for air and dirt separators

AUTOMATIC AND MANUAL AIR VENTS

Automatic air vents are designed to remove the air that accumulates in heating and cooling systems without the need for manual intervention. This prevents harmful air that may compromise the life and the performance of the system which includes:
corrosion due to the oxygen;
pockets of air trapped in the heat emitters;
cavitation in the circulation pumps;
noise from air passing through the pipes.

The accumulation of air bubbles in the air vent body causes the float to drop and thus the vent valve to open. The air vent functions correctly, as long as the water pressure remains below the maximum discharge pressure.

MAXCAL™

Extra high capacity air vent is ideal for use in large piping systems and can also be installed in horizontal piping. The valve body and cover are made of forged brass while the filter, valve stem, float, and spring are all made of stainless steel to prevent the formation of rust.

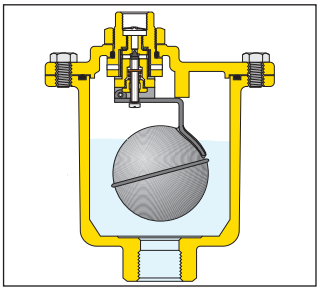

501 MAXCAL™

Automatic air vent for heating and air conditioning. Brass body and cover, stainless steel internal components.
Extra high discharge capacity.
Max. working pressure: 230 psi.
Max. discharge pressure: 90 psi.
Max. discharge rate: 9 SCFM.
Working temperature range: -4 – 250°F.
Discharge top thread: ⅜" female.

Code	Description	Lbs	USD
501502A	¾" FNPT	7	**448.00**

MINICAL™ and VALCAL™

These float type automatic air vents are designed to vent released air from the water while being heated. They are used on manifolds or pipes in sealed heating systems.

MINICAL™ is a standard size air vent that will discharge up to 1.75 SCFM.

VALCAL™ is a high capacity larger size air vent that will discharge up to 2.5 SCFM.

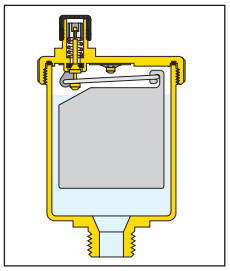

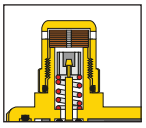

Some MINICAL™ and VALCAL™ models are equipped with a hygroscopic safety cap. Cellulose fiber discs serve as the redundant seal. Their volume increases by 50% when they become wet which cause the discharge vent to close.

Some MINICAL™ and VALCAL™ models are equipped with a service check valve which facilitates maintenance operations by shutting off the water flow when the air vent is removed and also allows an easy replacement of air vent without purging the system.

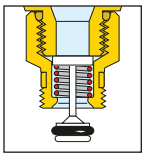

5020 MINICAL™

Automatic air vent.
Brass body.
Max. working pressure: 150 psi.
Max. discharge pressure: 40 psi.
Max. discharge rate: 1.75 SCFM.
Max. working temperature: 250°F.

Code	Description	Lbs	USD
502015A	⅛" MNPT	0.4	**25.10**
502040A	½" MNPT	0.4	**25.10**

5021 MINICAL™

Automatic air vent with service check valve
Brass body.
Max. working pressure: 150 psi.
Max. discharge pressure: 40 psi.
Max. discharge rate: 1.75 SCFM.
Max. working temperature: 230°F.

Code	Description	Lbs	USD
502115A	⅛" MNPT	0.4	**33.80**
502113A	⅛" MNPT, hygroscopic anti-drip cap NEW	0.4	**39.00**

5020 MINICAL™

Automatic air vent.
Brass body.
Hygroscopic safety air vent cap.
Max. working pressure: 150 psi.
Max discharge pressure: 60 psi.
Max. discharge rate: 1.75 SCFM.
Max. working temperature: 250°F.

Code	Description	Lbs	USD
502043A	½" MNPT	0.6	**35.40**

5022 VALCAL™

High discharge automatic air vent.
Brass body.
Max. working pressure: 150 psi.
Max. discharge pressure: 60 psi.
Max. discharge rate: 2.5 SCFM.
Max. working temperature: 250°F.

Code	Description	Lbs	USD
502243A	½" MNPT	0.5	**60.70**

5023 VALCAL™

High discharge vent with service check.
Brass body.
Max. working pressure: 150 psi.
Max. discharge pressure: 60 psi.
Max. discharge rate: 2.5 SCFM.
Max. working temperature: 250°F.

Code	Description	Lbs	USD
502343A	½" MNPT	0.5	**71.80**

AUTOMATIC AND MANUAL AIR VENTS

5026 ROBOCAL™

Automatic air vent.
Brass body.
Max. working pressure: 150 psi.
Max. discharge pressure: 90 psi.
Max. discharge rate: 1.75 SCFM.
Max. working temperature: 240°F.

Code	Description	Lbs	USD
502610A	⅛" MNPT	0.6	**22.50**
502620A	¼" MNPT	0.6	**23.50**
502630	⅜" straight thread	1.0	**31.30**
502640	½" straight thread	1.0	**33.80**

5027 ROBOCAL™

Automatic air vent with service check valve.
Brass body.
Max. working pressure: 150 psi.
Max. discharge pressure: 90 psi.
Max. discharge rate: 1.75 SCFM.
Max. working temperature: 240°F.

Code	Description	Lbs	USD
502710A	⅛" MNPT	0.6	**31.20**
502720A	¼" MNPT	0.6	**32.90**
NA502740A	½" MNPT, hygroscopic anti-drip cap NEW	0.6	**42.60**

Service check valve for removal of air vent or expansion tank without purging system.
Fits automatic air vents 502 series.
Max. working pressure: 150 psi.
Max. working temperature: 250°F.

Code	Description	Lbs	USD
59474A	⅛" MNPT x FNPT	0.1	**17.50**
59804A	¼" MNPT x FNPT	0.1	**18.80**
561402A	½" MNPT x FNPT	0.2	**21.60**

551 DISCALAIR®

High discharge automatic air vent.
Brass body.
Stainless steel float guide pin and linkage.
Max. working pressure: 150 psi.
Max. discharge pressure: 150 psi.
Max. discharge rate: 4.5 SCFM.
Max. working temperature: 250°F.

Code	Description	Lbs	USD
551004A	½" FNPT	0.8	**138.00**

5080 HYGROCAL™

Automatic hygroscopic air vent for hydronic heating system and low pressure steam.
Manual operation by rotating knob.
Chrome plated brass body.
Max. working pressure: 150 psi.
Max. working temperature: 212°F.
Low pressure steam: 15 psi.
(Priced each, sold in package of 25 each)

Code	Description	Lbs	USD
508013A	⅛" MNPT	0.1	**12.30**

Automatic radiator air vent valve is designed to remove any air trapped inside the heat emitters both during the filling of the system and in normal operation. The automatic air discharge happens when the hygroscopic cellulose fiber discs are dry. As air is vented and water contacts the hygroscopic discs, they increase their volume by 50% which cause the discharge vent to close.

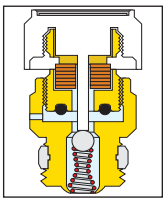

5081

Replacement hygroscopic cartridge fits hygroscopic air vent 5080 series.
(Priced each, sold in package of 25 each)

Code	Description	Lbs	USD
508100A	Cartridge	0.1	**10.60**

337

Manual air vent with metal seal and adjustable outlet.
Brass body.
Max. working pressure: 150 psi.
Max. working temperature: 212°F.

Code	Description	Lbs	USD
337221A	¼" MNPT	0.1	**15.20**

Function

DISCALAIR® automatic air vents release air that forms in the hydraulic circuits of heating and air conditioning systems with pressures to 150 psi. The venting air discharge capacity is capable of expelling over 4 standard cubic feet per minute (SCFM). The circulation of fully de-aerated water or glycol-water mediums enables the equipment to operate under optimum conditions, free from noise, corrosion, localized overheating, or mechanical damage.

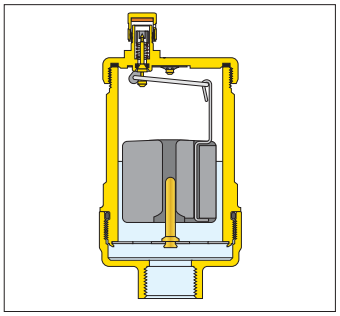

AIR SEPARATORS

551 DISCAL® Sweat

Air separator.
Brass body.
Stainless steel float guide pin and linkage.
Glass reinforced nylon internal element.
½" NPT female bottom thread.
Max. working pressure: 150 psi.
Working temperature range: 32—250°F.

Code	Description	Lbs	USD
551028A	1" sweat	3.7	**305.00**
551035A	1¼" sweat	3.7	**444.00**
551041A	1½" sweat	4.9	**578.00**
551054A	2" sweat	5.5	**706.00**

551 DISCAL® Sweat

Air separator with ½" service check valve (code 561402A) to mount expansion tank on bottom thread.
Brass body.
Stainless steel float guide pin and linkage.
Glass reinforced nylon internal element.
Max. working pressure: 150 psi.
Working temperature range: 32—250°F.

Code	Description	Lbs	USD
551028AC	1" sweat	3.8	**315.00**
551035AC	1¼" sweat	3.8	**456.00**
551041AC	1½" sweat	5.0	**590.00**
551054AC	2" sweat	5.6	**717.00**

551 DISCAL® NPT

Air separator.
Brass body.
Stainless steel float guide pin and linkage.
Glass reinforced nylon internal element.
½" NPT female bottom thread.
Max. working pressure: 150 psi.
Working temperature range: 32—250°F.

Code	Description	Lbs	USD
551005A	¾" FNPT	3.7	**297.00**
551006A	1" FNPT	3.7	**319.00**
551007A	1¼" FNPT	4.9	**467.00**
551008A	1½" FNPT	4.9	**607.00**
551009A	2" FNPT	5.5	**742.00**

551 DISCAL® NPT

Air separator with automatic ½" check valve (code 561402A) to mount expansion tank on bottom thread.
Brass body.
Stainless steel float guide pin and linkage.
Glass reinforced nylon internal element.
Max. working pressure: 150 psi.
Working temperature range: 32—250°F.

Code	Description	Lbs	USD
551005AC	¾" FNPT	3.8	**309.00**
551006AC	1" FNPT	3.8	**331.00**
551007AC	1¼" FNPT	5.0	**477.00**
551008AC	1½" FNPT	5.0	**619.00**
551009AC	2" FNPT	5.6	**752.00**

551 DISCAL® Press

Air separator.
Brass body.
Stainless steel float guide pin and linkage.
Glass reinforced nylon internal element.
Max. working pressure: 150 psi.
Working temperature range: 32—250°F.

Code	Description	Lbs	USD
551066A	1" integral press	3.8	**364.00**
551067A	1¼" integral press	5	**560.00**
551068A	1½" integral press	5.1	**724.00**
551069A	2" integral press	5.5	**883.00**

551 DISCAL® Press

Air separator with automatic ½" check valve (code 561402A) to mount expansion tank on bottom thread.
Brass body.
Stainless steel float guide pin and linkage.
Glass reinforced nylon internal element.
Max. working pressure: 150 psi.
Working temperature range: 32—250°F.

Code	Description	Lbs	USD
551066AC	1" integral press	3.9	**374.00**
551067AC	1¼" integral press	5.1	**571.00**
551068AC	1½" integral press	5.2	**737.00**
551069AC	2" integral press	5.6	**896.00**

AIR SEPARATORS

Construction details

The air separator uses the combined action of several physical principles. The active part consists of an assembly of concentric mesh surfaces. These elements create the whirling movement required to facilitate the release of microbubbles and their adhesion to these surfaces. The bubbles, fusing with each other, increase in size until the hydrostatic thrust overcomes the adhesion force to the mesh. They rise towards the top of the unit from which they are released through a float-operated automatic air vent with stainless steel float guide pin, which keeps the float from binding.

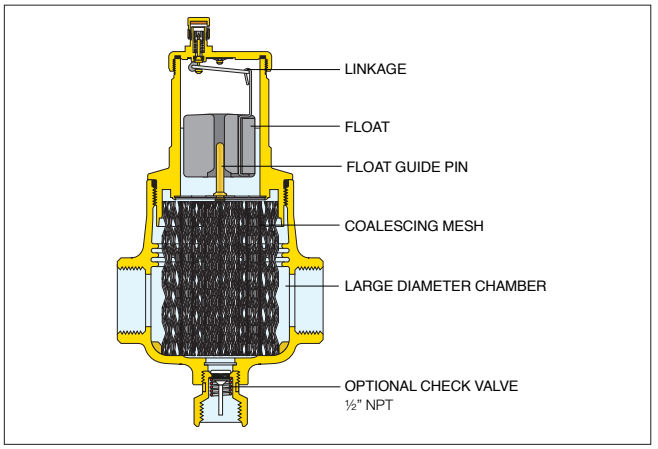

	MAXIMUM FLOW RATE				
Size	¾"	1"	1¼"	1½"	2"
GPM	6	10	15	22	39
Cv	19	32	56	73	81

	MAXIMUM FLOW RATE		
Size	¾" compact	¾" vertical	1" vertical
GPM	6	6	10
Cv	12	19	19

ACCESSORIES

Service check valve for easy replacement of expansion tank when connected to bottom of DISCAL®.

Code	Description	Lbs	USD
561402A	½" MNPT x ½" FNPT	0.2	**21.60**

Insulation shell fits DISCAL® 551 series.

Code	Description	Lbs	USD
CBN551005	Fits ¾"* and 1" 551 series	0.1	**81.40**
CBN551007	Fits 1¼" and 1½" 551 series	0.1	**87.30**
CBN551009	Fits 2" 551 series	0.1	**95.50**

*Will not fit the ¾" compact DISCAL®; codes 551003A and 551022A.

551
DISCAL® Compact

Air separator.
Brass body.
Stainless steel float guide pin and linkage.
Stainless steel mesh internal element.
½" NPT bottom thread.
Max. working pressure: 150 psi.
Working temperature range: 32—250°F.

Code	Description	Lbs	USD
551003A	¾" FNPT	2.0	**198.00**
551022A	¾" sweat	2.0	**190.00**

551
DISCAL® Compact

Air separator with ½" service check valve to mount expansion tank on bottom thread.
Brass body.
Stainless steel float guide pin and linkage.
Stainless steel mesh internal element.
Max. working pressure: 150 psi.
Working temperature range: 32—250°F.

Code	Description	Lbs	USD
551003AC	¾" FNPT	2.1	**209.00**
551022AC	¾" sweat	2.1	**203.00**

5517
DISCAL® Rotating collar

Air separator with rotating collar for horizontal or vertical pipes.
Brass body.
Stainless steel float guide pin and linkage.
Stainless steel mesh internal element.
Max. working pressure: 150 psi.
Working temperature range: 32—250°F.

Code	Description	Lbs	USD
551705A	3/4" NPT male union	4.9	**378.00**
551765A	3/4" press union	4.9	**396.00**
551795A	3/4" sweat union	4.9	**372.00**
551706A	1" NPT male union	4.9	**400.00**
551766A	1" press union	4.9	**443.00**
551796A	1" sweat union	4.9	**394.00**
551716*	body only, order unions separately	4.4	**344.00**

*See fitting selection table in Section 8.

AIR SEPARATORS

551 DISCAL®

Air separator.
Epoxy resin coated steel body.
Stainless steel float guide pin and linkage.
Stainless steel mesh internal element.
ANSI 150 flange connections.
1" NPT male bottom drain connection.
Complete with male bottom drain valve (NA39753).
½" NPT male side drain connection.
Complete with side drain valve (538402FD).
Max. working pressure: 150 psi.
Vessel temperature range: 32—270°F.

Code	Description		Lbs	USD
551050A	2" ANSI flange		34	**3,217.00**
551050AT	2" MNPT	NEW	30	**3,060.00**
551060A	2½" ANSI flange		35	**3,440.00**
551060AT	2½" MNPT	NEW	31	**3,282.00**
551080A	3" ANSI flange		62	**4,554.00**
551100A	4" ANSI flange		67	**5,095.00**
551120A	5" ANSI flange		106	**7,414.00**
551150A	6" ANSI flange		117	**9,553.00**

Air separator construction

DISCAL® air separators are constructed to allow maintenance and cleaning operations to be carried out without having to remove the separator body from the pipe work. All DISCAL® air separator have a bottom connection drain valve. All internal air release control components are fully accessible. The automatic air release valve, located at the top of the separator, has a long chamber for the movement of the float. This feature prevents any debris present in the water from reaching the sealing seat.

Flanged models include a side drain vent to release large amounts of air when filling the system and to remove any debris present above the water level.

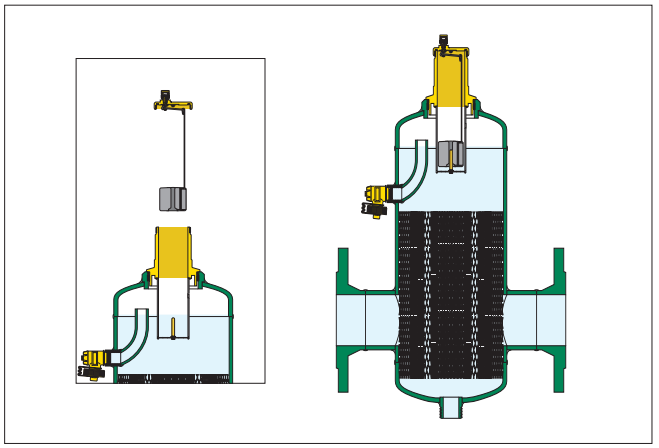

	MAXIMUM FLOW RATE								
Size	2"	2½"	3"	4"	5"	6"	8"	10"	12"
GPM	100	155	220	400	615	880	1,570	2,450	3,525
Cv	87	174	208	324	520	832	1,109	1,387	1,664

NA551 DISCAL® ASME/CRN

Air separator.
Epoxy resin coated steel body.
Stainless steel float guide pin and linkage.
Stainless steel mesh internal element.
ANSI 150 flange connections.
1" NPT male bottom drain connection.
Complete with drain valve (NA39753).
½" NPT male side drain connection.
Complete with side drain valve (538402FD).
Max. working pressure: 150 psi.
Vessel temperature range: 32—270°F.
ASME and CRN registered.

Code	Description	Lbs	USD
NA551050A	2" ANSI flange ASME & CRN	34	**3,856.00**
NA551060A	2½" ANSI flange ASME & CRN	35	**4,122.00**
NA551080A	3" ANSI flange ASME & CRN	62	**5,457.00**
NA551100A	4" ANSI flange ASME & CRN	67	**6,105.00**
NA551120A	5" ANSI flange ASME & CRN	106	**8,884.00**
NA551150A	6" ANSI flange ASME & CRN	117	**11,447.00**

NA prefix indicates ASME tagged and registered with the National Board of Boiler and Pressure Vessel Inspectors; CRN registered.

NA551 DISCAL® ASME

Air separator.
Epoxy resin coated steel body.
Stainless steel float guide pin and linkage.
Stainless steel mesh internal element.
ANSI 150 flange connections.
2" NPT male bottom drain connection.
Complete with drain valve (NA59600).
½" NPT male side drain connection.
Complete with side drain valve (538402FD).
Max. working pressure: 150 psi.
Vessel temperature range: 32—270°F.
ASME registered.
Consult factory for CRN on 12" only.

Code	Description	Lbs	USD
NA551200A	8" ANSI flange ASME & CRN	371	**18,732.00**
NA551250A	10" ANSI flange ASME & CRN	617	**28,099.00**
NA551300A	12" ANSI flange ASME	871	**36,527.00**

NA prefix indicates ASME tagged and registered with the National Board of Boiler and Pressure Vessel Inspectors; CRN registered.

Replacement drain ball valve.
Fits DISCAL® series.
Brass body.
Lever.
Max. working pressure: 150 psi.
Max. working temperature: 365°F.

Code	Description	Lbs	USD
NA39753	1" FNPT with lever	0.7	**60.40**
NA59600	2" FNPT with lever	3.5	**216.00**

DIRT SEPARATORS

The dirt separating action performed by the DIRTCAL® is based on using the internal element with concentric diamond pattern mesh surfaces instead of a mechanical filter. The element offers little resistance to the medium flow while ensuring dirt separation. This occurs due to the particles colliding with the concentric diamond pattern mesh surfaces and then settling to the bottom, and not by filtration; which, over time, gets continuously clogged. By contrast, the DIRTCAL® low-velocity zone dirtseparator efficiently removes the particles to as small as 5 µm (0.2 mil) with very low head loss. The dirt collection chamber at the bottom of the DIRTCAL® is at the optimal distance from the inlet and outlet connections to ensure that the collected dirt particles are not affected by the swirling flow through the mesh element. The dirt can then be removed through the bottom drain port even with the system running, by opening the drain valve. Low head losses and performance are maintained over time.

5465
DIRTCAL®

Dirt separator.
Epoxy resin coated steel body.
1" threaded NPT bottom drain connection
Complete with drain valve (code NA39753).
¾" NPT male top thread with brass cap.
ANSI 150 flange connections.
Max. working pressure: 150 psi.
Vessel temperature range: 32—270°F.
Particle separation capacity: to 5 µm (0.2 mil).

Code	Description	Lbs	USD
546560A	2½" ANSI flange	38	**2,272.00**

Dirt separation comparison

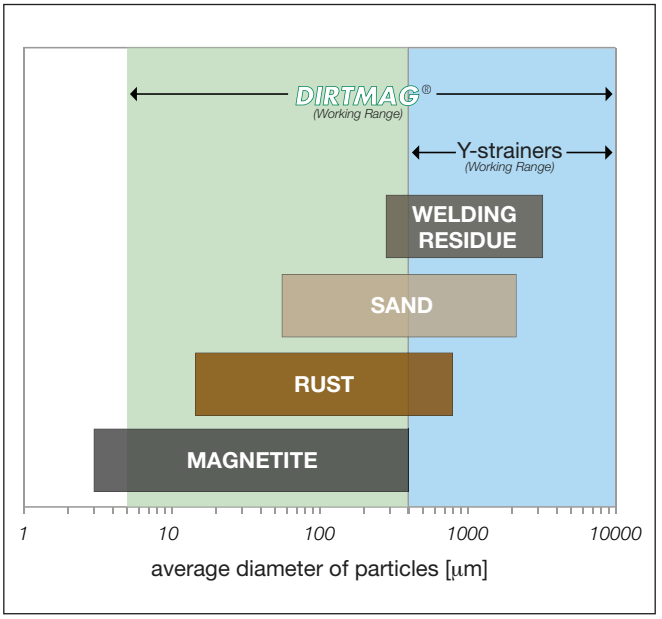

NA5465
DIRTCAL® ASME/CRN

Dirt separator.
Epoxy resin coated steel body.
1" threaded NPT bottom drain connection
Complete with drain valve (code NA39753).
¾" NPT male top thread with brass cap.
ANSI 150 flange connections.
Max. working pressure: 150 psi.
Vessel temperature range: 32—270°F.
Particle separation capacity: to 5 µm (0.2 mil).
ASME and CRN registered.

Code	Description	Lbs	USD
NA546550A	2" ANSI flange ASME & CRN	38	**3,308.00**
NA546560A	2½" ANSI flange ASME & CRN	38	**3,519.00**
NA546580A	3" ANSI flange ASME & CRN	55	**4,582.00**
NA546510A	4" ANSI flange ASME & CRN	55	**5,015.00**
NA546512A	5" ANSI flange ASME & CRN	138	**7,230.00**
NA546515A	6" ANSI flange ASME & CRN	148	**9,274.00**

ASME U-stamp tagged and registered with the National Board of Boiler and Pressure Vessel Inspectors CRN registered.

NA5465
DIRTCAL® ASME/CRN

Dirt separator.
Epoxy resin coated steel body.
2" threaded NPT bottom drain connection.
Complete with drain valve (code NA59600).
¾" NPT male top thread with brass cap.
ANSI 150 flange connections.
Max. working pressure: 150 psi.
Vessel temperature range: 32—270°F.
Particle separation capacity: to 5 µm (0.2 mil).
ASME and CRN registered. For CRN consult factory for sizes 12"—14".

Code	Description	Lbs	USD
NA546520A	8" ANSI flange ASME & CRN	335	**18,963.00**
NA546525A	10" ANSI flange ASME & CRN	620	**29,232.00**
NA546530A	12" ANSI flange ASME	870	**36,204.00**
NA546535A	14" ANSI flange ASME	1,000	**45,518.00**

ASME U-stamp tagged and registered with the National Board of Boiler and Pressure Vessel Inspectors registered. CRN registered, 8" and 10"; consult factory for 12" — 14".

	MAXIMUM FLOW RATE					
Size	2"	2½"	3"	4"	5"	6"
GPM	89	150	227	355	816	904
Cv	88	176	211	328	520	842

	MAXIMUM FLOW RATE			
Size	8"	10"	12"	14"
GPM	1,570	2,450	3,525	4,800
Cv	1,055	1,400	1,755	2,075

AIR AND DIRT SEPARATORS

The **DISCALDIRT®** air and dirt separator uses a coalescing element that consists of an assembly of concentric diamond pattern mesh surfaces. This element creates the whirling movement required to facilitate the release of micro-bubbles and their adhesion to these surfaces. The bubbles, fusing with each other, increase in volume until the bouyancy force overcomes the adhesion force to the surface. They rise towards the top of the unit and are released through a float-operated automatic air release valve.

The dirt separating action performed by the same element offers little resistance to the medium flow while ensuring dirt separation. The particles collide with the concentric diamond pattern mesh surfaces and then settle to the bottom, and not by filtration unlike mesh strainers; which, over time, get progressively clogged. By contrast, the DISCALDIRT®'s low-velocity zone dirt separator function efficiently removes the particles to as small as 5µm (0.2 mil) with very low head loss. The dirt can then be removed through the bottom drain port.

546 DISCALDIRT®

Air & Dirt separator.
Brass body.
Stainless steel float guide pin and linkage.
Glass reinforced nylon internal element.
Max. working pressure: 150 psi.
Working temperature range: 32—250°F.
Particle separation capacity: to 5 µm (0.2 mil).

Code	Description	Lbs	USD
546096A	1" sweat	8.3	**513.00**
546016A	1" MNPT	8.3	**539.00**
546097A	1¼" sweat	8.3	**612.00**

The **DISCALDIRTMAG™** air and dirt separator with magnet uses an external magnet ring for separation of ferrous impurities. The external magnet allows greater effectiveness in the separation and collection of ferrous impurities. The impurities are retained in the body of the dirt separator by the strong magnetic field created by magnets in its external outer ring. The outer ring is removable from the body to allow the flushing of sludge, with the system still running. Since the magnetic ring is positioned outside the body of the dirt separator, it does not interfere with the flow through the device.

5461 DISCALDIRTMAG™

Air & Dirt separator with magnet.
Brass body.
Stainless steel float guide pin and linkage.
Glass reinforced nylon internal element.
Max. working pressure: 150 psi.
Working temperature range: 32—250°F.
Particle separation capacity: to 5 µm (0.2 mil).
Ferrous impurities separation efficiency: 100%.

Code	Description	Lbs	USD
546196A	1" sweat	8.5	**632.00**
546116A	1" MNPT	8.5	**659.00**
546197A	1¼" sweat	8.5	**752.00**

5461 DISCALDIRTMAG™

Air & Dirt separator with magnet.
Epoxy resin coated steel body.
Stainless steel float guide pin and linkage.
Stainless steel mesh internal element.
Complete with union connections.
Max. working pressure: 150 psi.
Working temperature range: 32 — 230°F
Particle separation capacity: to 5 µm (0.2 mil).
Ferrous impurities separation efficiency: 100%.

Code	Description	Lbs	USD
546198A	1½" sweat union	22	**1,863.00**
546108A	1½" NPT female union	22	**1,918.00**
546168A	1½" press union	22	**2,128.00**
546199A	2" sweat union	23	**1,952.00**
546109A	2" NPT female union	23	**2,026.00**
546169A	2" press union	23	**2,372.00**

Insulation shell for DISCALDIRT® & DISCALDIRTMAG™.

Code	Description	Lbs	USD
CBN546002	Fits 1", 1¼" brass 546 only	0.1	**128.00**
CBN546118	Fits 1½" steel 5461 only	0.1	**161.00**
CBN546119	Fits 2" steel 5461 only	0.1	**184.00**

	MAXIMUM FLOW RATE			
Size	1"	1¼"	1½"	2"
GPM	10	15	22	39
Cv	32	40	50	79

546 DISCALDIRT®

Air & Dirt separator.
Epoxy resin coated steel body.
Stainless steel float guide pin and linkage.
Stainless steel mesh internal element.
1" NPT threaded bottom drain connection.
Complete with side drain valve (538402 FD).
ANSI 150 flange connections.
Complete with drain valve (NA39753)
Max. working pressure: 150 psi.
Vessel temperature range: 32—270°F.
Particle separation capacity: to 5 µm (0.2 mil).

Code	Description	Lbs	USD
546050A	2" ANSI flange	40	**4,086.00**
546060A	2½" ANSI flange	42	**4,306.00**
546080A	3" ANSI flange	73	**5,547.00**
546100A	4" ANSI flange	78	**6,081.00**
546120A	5" ANSI flange	181	**8,772.00**
546150A	6" ANSI flange	188	**10,702.00**

AIR AND DIRT SEPARATORS

NA546
DISCALDIRT®
ASME/CRN

Air & Dirt separator.
Epoxy resin coated steel body.
Stainless steel float guide pin and linkage.
Stainless steel mesh internal element.
1" (2—6" sizes) and 2" (8—14" sizes) threaded NPT bottom drain connection.
ANSI 150 flange connections.
Complete with drain valve NA39753 (2—6" sizes), NA59600 (8—14" sizes).
Max. working pressure: 150 psi.
Vessel temperature range: 32—270°F.
ASME and CRN registered. For CRN consult factory for factory sizes 12-14".

Code	Description	Lbs	USD
NA546050T	2" Threaded ASME & CRN	28	**3,912.00**
NA546060A	2½" ANSI flange ASME & CRN	42	**5,264.00**
NA546080A	3" ANSI flange ASME & CRN	73	**6,780.00**
NA546100A	4" ANSI flange ASME & CRN	78	**7,432.00**
NA546120A	5" ANSI flange ASME & CRN	181	**10,721.00**
NA546150A	6" ANSI flange ASME & CRN	188	**13,080.00**
NA546200A	8" ANSI flange ASME & CRN	355	**24,295.00**
NA546250A	10" ANSI flange ASME & CRN	555	**37,355.00**
NA546300A	12" ANSI flange ASME	825	**46,711.00**
NA546350A	14" ANSI flange ASME	950	**59,066.00**

ASME U-stamp tagged and registered with the National Board of Boiler and Pressure Vessel Inspectors; CRN registered, 2"— 10"; consult factory for 12" — 14".

Low head losses and high performance are maintained over time. The dirt separating action performed by the DISCALDIRT® air and dirt separator is based on using the internal element with concentric diamond pattern mesh surfaces instead of an ordinary filter. The element offers little resistance to the medium flow while ensuring dirt separation. This occurs due to the particles colliding with the concentric diamond pattern mesh surfaces and then settling to the bottom, and not by filtration; which, over time, gets progressively clogged. By contrast, the DISCALDIRT® low-velocity zone air and dirt separator efficiently removes the particles to as small as 5 µm (0.2 mil) with very low head loss. The dirt collection chamber at the bottom of the DISCALDIRT® is at the right distance from the inlet and outlet connections so that the collected dirt particles are not affected by the swirling flow through the bottom drain port, even with the system running, by opening the drain valve with the handle.

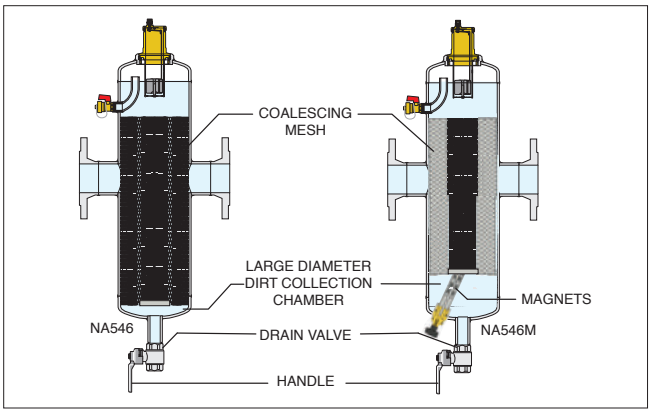

NA546M
DISCALDIRTMAG™
ASME/CRN

Air & Dirt separator with magnets.
Epoxy resin coated steel body.
Stainless steel float guide pin and linkage.
Stainless steel mesh internal element.
ANSI 150 flange connections.
1" (2—6" sizes) and 2" (8—14" sizes) threaded NPT bottom drain connection.
Complete with drain valve NA39753 (2—6" sizes), NA59600 (8—14" sizes).
Max. working pressure: 150 psi.
Vessel temperature range: 32—270°F.
Particle separation capacity: to 5 µm (0.2 mil).
Ferrous impurities separation efficiency: 100%.
ASME and CRN registered. For CRN consult factory for factory sizes 12-14".

Code	Description	Lbs	USD
NA546050TM*	2" Threaded ASME & CRN	31	**4,523.00**
NA546060AM*	2½" ANSI flange ASME & CRN	45	**5,915.00**
NA546080AM*	3" ANSI flange ASME & CRN	76	**7,695.00**
NA546100AM*	4" ANSI flange ASME & CRN	81	**8,366.00**
NA546120AM*	5" ANSI flange ASME & CRN	184	**11,753.00**
NA546150AM*	6" ANSI flange ASME & CRN	191	**14,181.00**
NA546200AM**	8" ANSI flange ASME & CRN	365	**27,821.00**
NA546250AM**	10" ANSI flange ASME & CRN	565	**40,167.00**
NA546300AM**	12" ANSI flange ASME	835	**50,897.00**
NA546350AM**	14" ANSI flange ASME	960	**63,614.00**

*with one magnet
**with three magnets
ASME U-stamp tagged and registered with the National Board of Boiler and Pressure Vessel Inspectors. CRN registered, 2" — 10"; consult factory for 12" — 14".

In the DISCALDIRTMAG™ air and dirt separator with magnets ferrous impurities are captured by a concentrated magnetic field created by a stack of neodymium rare-earth magnets positioned inside a brass dry-well which is below the flow stream. Non-magnetic dirt particles are separated by colliding with an internal element in the flow stream and settling to the bottom. The deep collection chamber keeps the dirt from re-entering the flow stream. The dirt and ferrous impurities are flushed out while the system is operating, by removing the magnets and opening the purge valve.

	MAXIMUM FLOW RATE									
Size	2"	2½"	3"	4"	5"	6"	8"	10"	12"	14"
GPM	100	155	220	400	615	880	1,570	2,450	3,525	4,800
Cv	87	174	208	324	520	832	1,109	1,387	1,664	1,967

DIRT & MAGNETIC DIRT SEPARATORS

The dirt separating action performed by the DIRTCAL® is based on using the internal element with concentric diamond pattern mesh surfaces instead of a mechanical filter. The element offers little resistance to the medium flow while ensuring dirt separation. This occurs due to the particles colliding with the concentric diamond pattern mesh surfaces and then settling to the bottom, and not by filtration; which, over time, gets continuously clogged. By contrast, the DIRTCAL® low-velocity zone dirt separator requires a pressure drop 25% or less than that of a comparable Y-strainer depending on mesh size and amount of filtered debris. It efficiently removes the particles to as small as 5 µm (0.2 mil) with very low head loss. The dirt collection chamber at the bottom of the DIRTCAL® is at the optimal distance from the inlet and outlet connections to ensure that the collected dirt particles are not affected by the swirling flow through the mesh element. The dirt can then be removed through the bottom drain port even with the system running by opening the drain valve. Low head losses and performance are maintained over time.

5462
DIRTCAL®

Dirt separator.
Brass body.
½" NPT top thread with plug for optional air vent, code 502243A.
Max. working pressure: 150 psi.
Working temperature range: 32—250°F.
Particle separation capacity: to 5 µm (0.2 mil).

Code	Description	Lbs	USD
546205A	¾" FNPT	4.2	**270.00**
546228A	1" sweat	4.2	**284.00**
546206A	1" FNPT	4.2	**298.00**
546266A	1" press	4.5	**343.00**
546235A	1¼" sweat	4.2	**414.00**
546207A	1¼" FNPT	5.3	**435.00**
546267A	1¼" press	5.6	**528.00**
546241A	1½" sweat	4.9	**537.00**
546208A	1½" FNPT	6.2	**564.00**
546254A	2" sweat	5.5	**659.00**
546209A	2" FNPT	6.2	**692.00**

Replacement drain valve fits DIRTCAL® 5462 series, DIRTMAG® 5463 series, DISCALDIRT® 546 series and DISCALDIRTMAG™ 5461 series.
Brass body.
Max. working pressure: 150 psi.
Max. working temperature: 250°F.

Code	Description	Lbs	USD
538402 FD	½" MNPT x ¾" GHT	0.3	**21.50**

DIRTCAL® to DIRTMAG®
Retrofit kit.

Code	Description	Lbs	USD
F41661A	Retrofit kit	2.0	**166.00**

The versatile DIRTMAG® magnetic dirt separator removes both magnetic and non-magnetic particles continuously. In addition to removing sand and rust impurities with a glass-reinforced nylon internal element in a low-velocity zone chamber, the DIRTMAG® features a powerful removable external magnet around the body below the flow line for fast and effective capture of ferrous particles. The DIRTMAG® has the magnet positioned externally to maintain low pressure loss, and removes up to 100% of the ferrous impurities that can form in a hydronic system.

The DIRTMAG® can be fitted with optional insulated covers, code CBN5462xx series purchased separately, to minimize heat loss.

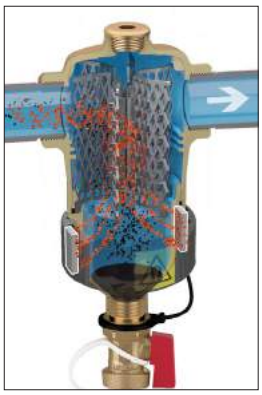

5463
DIRTMAG®

Dirt separator with magnet.
Brass body.
½" NPT top thread with plug.
Max. working pressure: 150 psi.
Working temperature range: 32—250°F.
Particle separation capacity: to 5 µm (0.2 mil).
Ferrous impurities separation efficiency: 100%.

Code	Description	Lbs	USD
546328A	1" sweat	4.2	**342.00**
546306A	1" FNPT	4.2	**359.00**
546366A	1" press	4.5	**390.00**
546335A	1¼" sweat	4.2	**499.00**
546307A	1¼" FNPT	5.3	**524.00**
546367A	1¼" press	5.6	**597.00**
546341A	1½" sweat	4.9	**651.00**
546308A	1½" FNPT	6.2	**683.00**
546368A	1½" press	6.5	**781.00**
546354A	2" sweat	5.5	**794.00**
546309A	2" FNPT	6.2	**824.00**
546369A	2" press	6.5	**953.00**

Insulation shell fits DIRTCAL® 5462 and DIRTMAG® 5463 series.
Labels included for field installation to externally identify product use.

Code	Description	Lbs	USD
CBN546205	Fits ¾" & 1" DIRTCAL®, DIRTMAG®	0.1	**81.40**
CBN546207	Fits 1¼" & 1½" DIRTCAL®, DIRTMAG®	0.1	**87.30**
CBN546209	Fits 2" DIRTCAL®, DIRTMAG®	0.1	**95.50**

MAGNETIC DIRT SEPARATORS

NA5463
DIRTMAG® Chemical kit

Magnetic Dirt separator plus Boiler Chemical Treatment Kit.
Brass body.
½" NPT top thread with plug.
Treats up to 30 gallons.
DIRTMAG® plus 1 can of Rhomar Hydro-Solv™ cleaner and 1 can of Pro-Tek® treatment.
Aerosols are injected into the hydronic system through the GHT connection on the bottom of the DIRTMAG®.

Code	Description	Lbs	USD
NA546328T	1" sweat	6.8	**540.00**
NA546306T	1" FNPT	6.8	**555.00**
NA546366T	1" press	7.1	**585.00**
NA546335T	1¼" sweat	6.8	**684.00**
NA546307T	1¼" FNPT	6.8	**707.00**
NA546367T	1¼" press	7.1	**773.00**

Construction

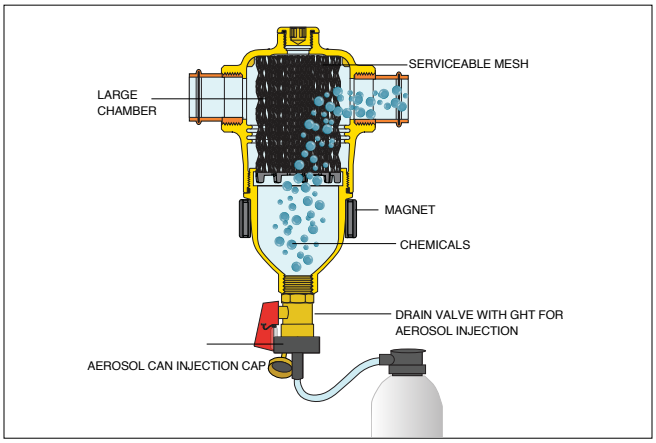

Application

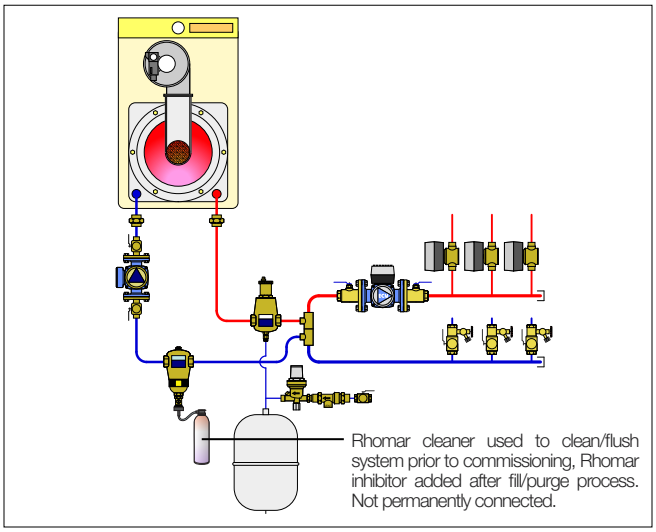

NA5453
DIRTMAG®

Dirt separator with magnet.
Brass mounting housing.
Composite PA66G30 body.
Max. working pressure: 45 psi.
Working temperature range: 32—195°F.
Particle separation capacity: to 5 µm (0.2 mil).
Ferrous impurities separation efficiency: 100%.
Drain valve with hose connection.
Top dosing point port.
Dosing capacity: 12 fluid oz.
Manual screw air vent.

Code	Description	Lbs	USD
NA545305	¾" NPT male union	4.5	**295.00**
NA545365	¾" press union	4.5	**320.00**
NA545395	¾" sweat union	4.5	**293.00**
NA545306	1" NPT male union	4.5	**340.00**
NA545366	1" press union	4.7	**385.00**
NA545396	1" sweat union	4.5	**324.00**
NA545355	¾" NPT female union, isolation valves	5.5	**354.00**
NA545356	1" NPT female union, isolation valves	5.5	**413.00**
NA545376	1" press union, isolation valves	5.5	**565.00**

	MAXIMUM FLOW RATE	
Size	¾"	1"
GPM	10	10
Cv w/ ball valve	9	9
Cv w/o ball valve	12	12

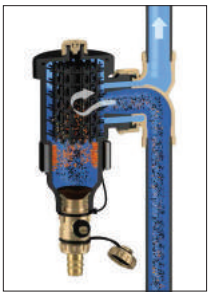

The dirt separator with magnet combines the action of the internal element and magnet. The impurities in the water strike the internal element and are separated, dropping into the bottom of the body where they are collected.
Ferrous impurities are also trapped inside the dirt separator body by two strong magnets inserted into removable outer ring collar. The collected impurities are discharged by removing the external ring magnet and opening the drain valve. This procedure can be performed while the system is in operation.



The special coupling between the locking nut and the mounting base allows the DIRTMAG® dirt separator to be rotated for installation to either vertical or horizontal pipes, while maintaining the same operating performance.

MAGNETIC DIRT SEPARATORS

Ferrous and non ferrous impurities in hydronic systems can deposit onto heat exchanger surfaces and accumulate in pump cavities causing reduced thermal efficiency and premature wear. The small and often microscopic magnetic particles, called magnetite, form when iron or steel corrodes. Highly abrasive, the extremely fine particles are difficult to remove by traditional means. DIRTMAG® separators offer highly efficient separation of typical dirt as well as magnetite. The magnetite is captured by a concentrated magnetic field created by a stack of neodymium rare-earth magnets positioned inside a brass dry-well which is below the flow stream. Non-magnetic dirt particles are separated by colliding with an internal element in the flow stream, settling to the bottom. The deep collection chamber keeps the dirt from re-entering the flow stream.

To purge the debris, the flexible magnetic stack is removed from the brass dry-well and, even while the system is still running, the drain valve is opened. Aided by the system pressure, the dirt and magnetite flushes out quickly and effectively. DIRTMAG® magnetic dirt separators accomplish 2½ times the ferrous impurities removal performance of standard dirt separators, delivering up to 100% elimination efficiency.

	MAXIMUM FLOW RATE					
Size	2"	2½"	3"	4"	5"	6"
GPM	89	150	227	355	816	904
Cv	88	176	211	328	520	842

	MAXIMUM FLOW RATE			
Size	8"	10"	12"	14"
GPM	1,570	2,450	3,525	4,800
Cv	1,055	1,400	1,755	2,075

5465M
DIRTMAG®

Magnetic dirt separator.
Epoxy resin coated steel body.
Complete with drain valve (code NA39753).
¾" NPT male top thread with brass cap.
ANSI 150 flange connections.
Max. working pressure: 150 psi.
Vessel temperature range: 32—270°F.
Particle separation capacity: to 5 µm (0.2 mil).
Ferrous impurities separation efficiency: 100%.

Code	Description	Lbs	USD
546550AM	2" ANSI flange	41	**2,666.00**
546560AM	2½" ANSI flange	41	**2,869.00**
546580AM	3" ANSI flange	58	**3,879.00**
546510AM	4" ANSI flange	58	**4,290.00**

NA5465M
DIRTMAG® ASME/CRN

Magnetic dirt separator with one magnet assembly.
Epoxy resin coated steel body.
Complete with drain valve (code NA39753).
¾" NPT male top thread with brass cap.
ANSI 150 flange connections.
Max. working pressure: 150 psi.
Vessel temperature range: 32—270°F.
Particle separation capacity: to 5 µm (0.2 mil).
Ferrous impurities separation efficiency: 100%.
ASME registered. CRN registered up to 10".
Consult factory for 12" and 14".

Code	Description	Lbs	USD
NA546550AM	2" ANSI flange ASME & CRN	41	**3,780.00**
NA546560AM	2½" ANSI flange ASME & CRN	41	**3,991.00**
NA546580AM	3" ANSI flange ASME & CRN	58	**5,265.00**
NA546510AM	4" ANSI flange ASME & CRN	58	**5,697.00**
NA546512AM	5" ANSI flange ASME & CRN	141	**7,913.00**
NA546515AM	6" ANSI flange ASME & CRN	151	**9,956.00**

NA5465M
DIRTMAG® ASME/CRN

Magnetic dirt separator with three magnets assembly.
Epoxy resin coated steel body.
Complete with drain valve (code NA59600).
¾" NPT male top thread with brass cap.
ANSI 150 flange connections.
Max. working pressure: 150 psi.
Vessel temperature range: 32—270°F.
Particle separation capacity: to 5 µm (0.2 mil).
Ferrous impurities separation efficiency: 100%.
ASME registered. CRN registered, 8" — 10".
Consult factory for 12" — 14".

Code	Description	Lbs	USD
NA546520AM	8" ANSI flange ASME & CRN	345	**21,641.00**
NA546525AM	10" ANSI flange ASME & CRN	630	**31,910.00**
NA546530AM	12" ANSI flange ASME	880	**38,882.00**
NA546535AM	14" ANSI flange ASME	1,010	**48,195.00**

ACCESSORIES FOR AIR AND DIRT SEPARATORS

Hygroscopic air vent cap fits DISCAL® 551, and DISCALDIRT® 546 series, and MINICAL® 502 series.

Code	Description	Lbs	USD
R59681	Vent cap	0.1	**26.60**

Anti-suction air vent cap fits DISCAL® 551, DISCALDIRT® 546 series and MINICAL® 502 series.

Code	Description	Lbs	USD
562100	Vent cap	0.1	**28.10**

Replacement air vent cap fits DISCAL® 551 and DISCALDIRT® 546 series.

Code	Description	Lbs	USD
R59119	Vent cap	0.1	**17.70**

Replacement plastic cap fits MINICAL® 5020 and 5021 series.

Code	Description	Lbs	USD
R56214	Vent cap	0.1	**2.90**

Replacement plastic air vent cap fits 5026 and 5027 series.

Code	Description	Lbs	USD
R56142	Vent cap	0.1	**2.80**

Magnetic/drywell assembly for DISCALDIRTMAG™ and DIRTMAG®

Code	Description	Lbs	USD
49684A	Fit 2" and 2½"	3.0	**459.00**
49685A	Fit 3" to 6"	3.0	**663.00**
F0000349	Fit 8" to 14"	3.0	**867.00**

Replacement air vent assembly fits DISCAL® brass 551 series (except Compact and Rotating Collar version), brass 546, brass and steel 5461 series and SEP4™ 5495 series.

Code	Description	Lbs	USD
59829	Air Vent	2.0	**172.00**

Replacement air vent assembly fits steel 551, NA551 steel DISCAL® and 546 steel series DISCAL DIRT® and DISCALDIRTMAG™ .

Code	Description	Lbs	USD
59756	Air vent	3.0	**202.00**

Replacement cover and float fits DISCAL® brass 551 series and DISCALDIRT® brass 546 series.
Vent cap sold separately.

Code	Description	Lbs	USD
F39807	Cover and float	0.4	**83.80**

Drain ball valve.
Fits DIRTCAL® 5465 and NA5465 series.
Fits steel separators in section 2.
Brass body.
Lever.
Max. working pressure: 150 psi.
Max. working temperature: 365°F.

Code	Description	Lbs	USD
NA39753	1" FNPT with lever	0.7	**60.40**
NA59600	2" FNPT with lever	3.5	**216.00**

Vent cap adapter fits all air separators and air vents except 5026 and 5027 series

Code	Description	Lbs	USD
NA10204	¼" MNPT	0.1	**30.30**

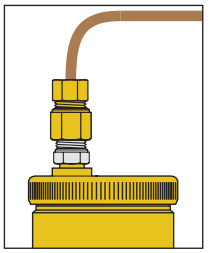

Vent cap adapter NA10204 replaces the air vent cap, provides a ¼" male NPT thread which can be used to connect a discharge tube with separate fittings.

THERMOSTATIC RADIATOR VALVES

This diagram is for illustration purposes only

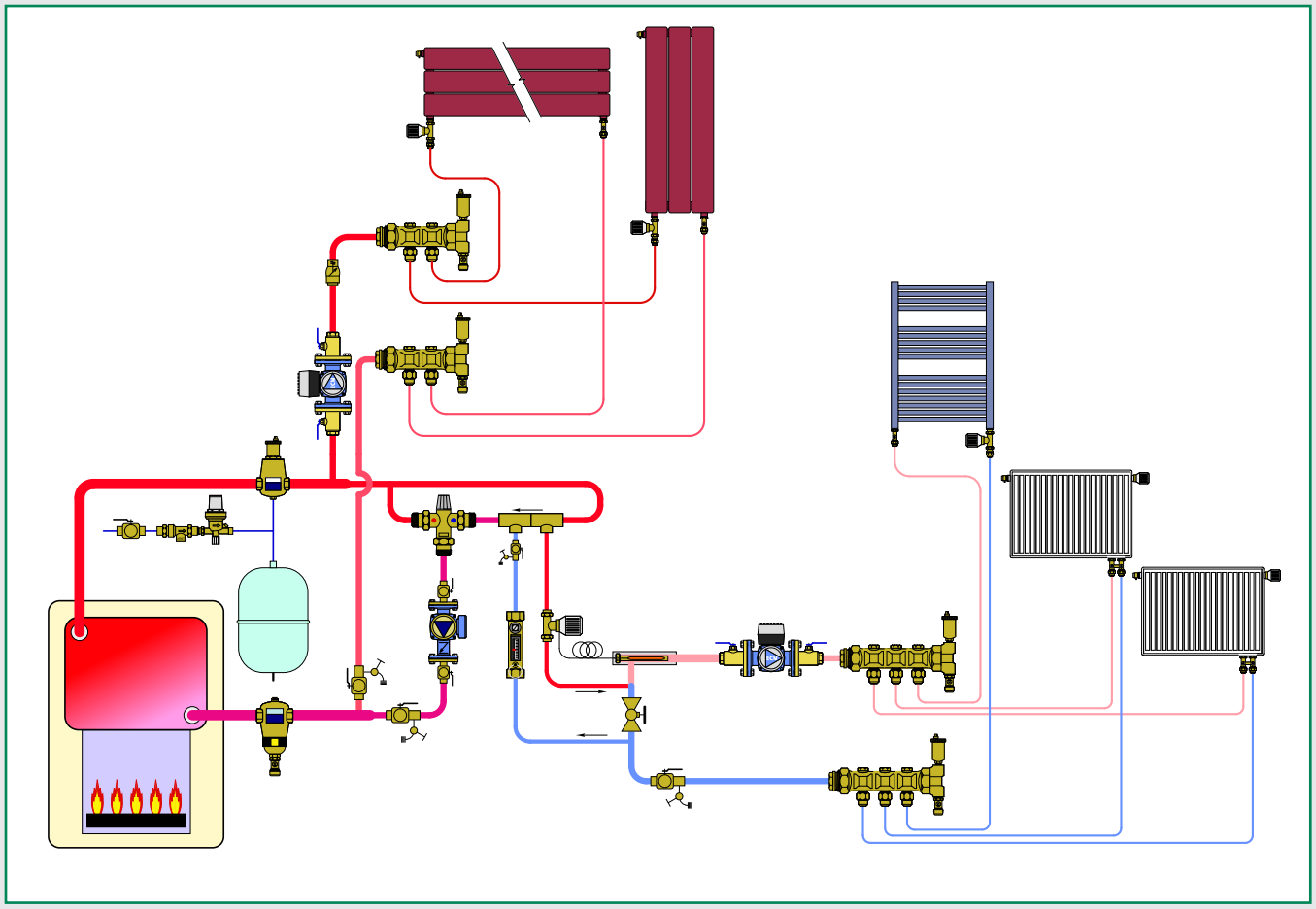

PRODUCTS INCLUDED IN SECTION

- Thermostatic control heads
- Accessories for thermostatic control heads
- Thermo-electric actuators
- NPT thermostatic radiator valve bodies
- European towel warmer radiator valves
- Connection valves for panel radiators
- Connection fittings

THERMOSTATIC CONTROL HEADS

200

Thermostatic control head fits radiator valves.
Set point locking mechanism.
Range stop adjustment.
Built-in sensor with liquid-filled element.
Fits valve 220, 221, 338 and 339 series.
Graduated scale from * to 5 corresponding to a temperature scale adjustment range of 45—82ºF (7—28ºC).

Code	Description	Lbs	USD
200000	Built-in sensor	0.5	**82.80**

472

Thermostatic control head with remote adjusting knob, liquid-filled element.
Fits valves 220, 221, 338, 339 & 676 series (direct coupling).
Temperature range: 43—82°F (6—28°C).
Capillary length: 78 in. (2 m.)

Code	Description	Lbs	USD
472000	Remote wall sensor	1	**283.00**

201

Thermostatic control head fits radiator valves.
With remote sensor.
Fits valve 220, 221, 338 and 339 series.
Graduated scale from * to 5 corresponding to a temperature scale adjustment range of 45—82ºF (7—28ºC).
Capillary length: 78" (2 m).

Code	Description	Lbs	USD
201000	Remote sensor	1	**148.00**

203

Thermostatic control head fits radiator valves; with contact probe.
Built-in sensor with liquid-filled element.
Fits valve 220, 221, 338 and 339 series.
The pre-set scale corresponds to adjustment temperature range of 68—122ºF (20—50ºC).
Capillary length: 78" (2 m).

Code	Description	Lbs	USD
203502	Remote sensor probe	0.5	**281.00**

ACCESSORIES

4490

Manual knob for thermostatic radiator valves. Fits valves 220 and 221 series.

Code	Description	Lbs	USD
449010	Manual knob	0.1	**17.10**

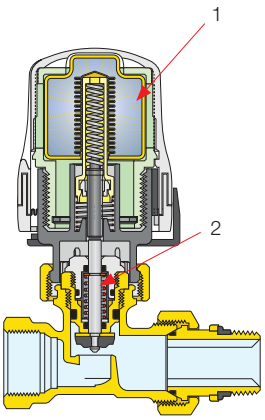

Key features

The thermostatic control head is filled with a non compressible liquid bellows (1). Plus, the radiator valve body has an extra strong valve stem compression spring (2). The non compressible liquid provides the force required to compress the strong valve stem spring. When the temperature decreases, the liquid bellows contracts, which allows the valve stem spring to lift the valve plug from valve seat after long periods of non-movement. This ensures that after a long 'off-season', when the actuator operates for the first time, the spring reliably lifts the valve plug off the seat without sticking. In addition, the 200000 control head features an easy-to-use locking mechanism that prevents unauthorized temperature set point changes and a range stop adjustment that limits the maximum temperature setting to save energy and over-heating.

THERMO-ELECTRIC ACTUATOR

6564

Thermo-electric actuator for electric control of radiator valves.
Fits valves 220, 221, 338 and 339 series.
Low current draw.
Power supply: 24 V AC/DC.
Initial current draw: ≤ 250 mA.
Power consumption: 3 W, 6 VA.
31.5" wire lead connection.

Code	Description	Lbs	USD
656404	24 V AC/DC	0.4	**114.00**
656414	24 V AC/DC with microswitch	0.4	**144.00**

Function

The control mechanism of the thermostatic radiator valve is a proportional temperature controller, composed of a liquid filled bellows. With increasing temperature the liguid expands which, in turn, causes the bellows to expand. When the temperature decreases the opposite occurs; the bellows contracts allowing the spring to return it to the original position. By connection to the valve stem, these movements adjust the heat transfer medium to the radiator.

*Head shown vertical for illustration only, it should be installed horizontally.

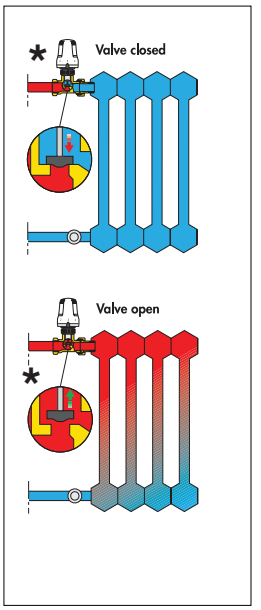

NPT THERMOSTATIC RADIATOR VALVE BODIES

220

Angled radiator valve body. Order thermo-electric actuators or thermostatic control heads separately for field installation.
Chrome plated.
Max. working pressure: 150 psi (10 bar).
Temperature range: 40—212°F (5—100°C).

Code	Description	Cv	Lbs	USD
220400A	½" FNPT in, ½" NPT male union out	2.7	0.3	**81.20**
220500A	¾" FNPT in, ¾" NPT male union out	3.7	0.3	**89.00**

221

Straight radiator valve body.
Order thermo-electric actuators or thermostatic control heads separately for field installation.
Chrome plated.
Max. working pressure: 150 psi (10 bar).
Temperature range: 40—212°F (5—100°C).

Code	Description	Cv	Lbs	USD
221400A	½" FNPT in, ½" NPT male union out	1.7	0.3	**81.20**
221500A	¾" FNPT in, ¾" NPT male union out	2.5	0.3	**89.00**

Replacement internal valve assembly fits radiator valves.

Code	Description	Lbs	USD
F36073	½" and ¾"	0.1	**11.40**

Universal radiator tool for installing ½ and ¾" tail pieces.

Code	Description	Lbs	USD
387127	Radiator tool	1.0	**119.00**

EUROPEAN TOWEL WARMER RADIATOR VALVES

338

Angled radiator valve body.
Convertible from standard manual operation to automatic control with thermostatic control heads.
Chrome plated.
Fits copper, single and multilayer PEX pipes.
Max. working pressure: 150 psi (10 bar).
Temperature range: 40—212ºF (5—100ºC).

Code	Radiator Connection	Pipe Connection	Cv	Lbs	USD
338452	½" straight	¾" conical	3.1	0.5	**85.30**

342

Angled isolation and balancing valve.
Chrome plated.
Fits copper, single and multilayer PEX pipes.
Max. working pressure: 150 psi (10 bar).
Temperature range: 40—212ºF (5—100ºC).

Code	Radiator Connection	Pipe Connection	Cv	Lbs	USD
342452	½" straight	¾" conical	4.6	0.5	**56.20**

339

Straight radiator valve body.
Convertible from standard manual operation to automatic control with thermostatic control heads.
Chrome plated.
Fits copper, single and multilayer PEX pipes.
Max. working pressure: 150 psi (10 bar).
Temperature range: 40—212ºF (5—100ºC).

Code	Radiator Connection	Pipe Connection	Cv	Lbs	USD
339452	½" straight	¾" conical	2.0	0.5	**92.00**

343

Straight isolation and balancing valve.
Chrome plated.
Fits copper, single and multilayer PEX pipes.
Max. working pressure: 150 psi (10 bar).
Temperature range: 40—212ºF (5—100ºC).

Code	Radiator Connection	Pipe Connection	Cv	Lbs	USD
343452	½" straight	¾" conical	2.5	0.5	**58.90**

Intended for use in metric radiators such as European towel warmers and panel radiators.

CONNECTION VALVES FOR PANEL RADIATORS

Caleffi panel radiator valves are designed to be connected to the bottom of panel radiators. They come in two versions: for two-pipe and one-pipe systems. Both are available straight (pipes exiting the floor) and angled (pipes exiting the wall). The two-pipe version is equipped with two ball shut-off valves. The one-pipe, in addition to the shut-off valves, is equipped with an adjustable by-pass from 30% to 50% of the flow rate towards the radiator, and a flow check valve device (1) prevents thermo-syphoning upward into radiator from by-passing flow.

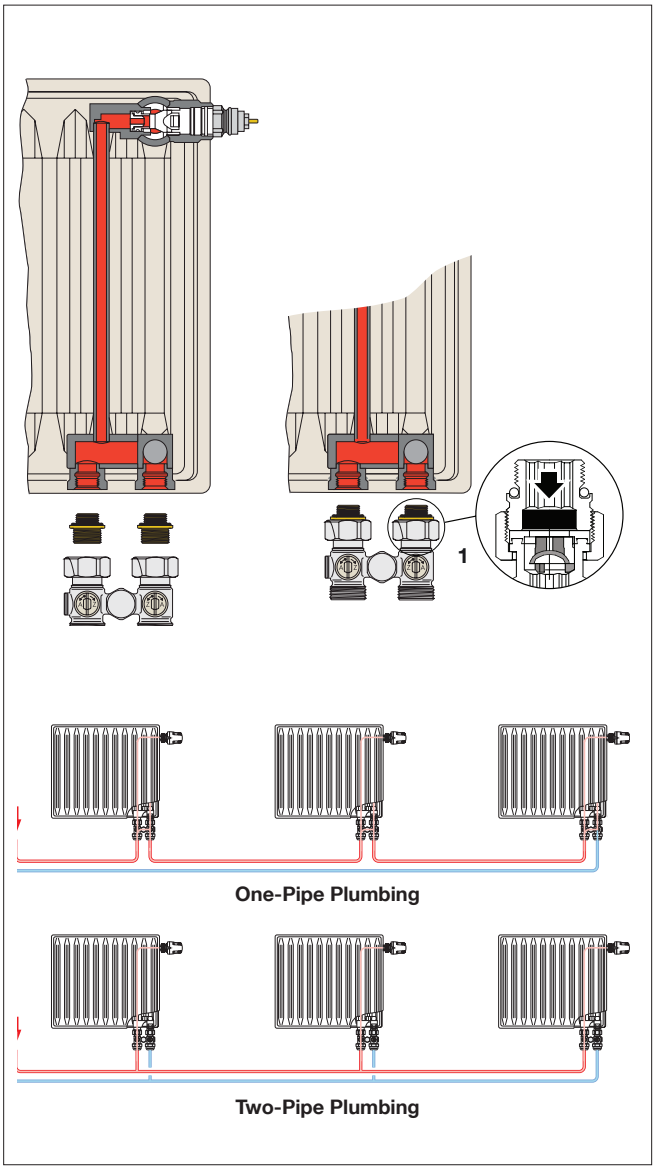

3010

Valve for panel radiators that have built-in thermostatic valve unit.
Two-pipe straight version (floor connections) fits ½" female radiator connections.
Max. working pressure: 150 psi (10 bar).
Max. working temperature: 212°F (100°C).

Code	Radiator Connection	Pipe Connection	Lbs	USD
301040	½" straight	¾" conical	1	**68.40**

3011

Valve for panel radiators that have built-in thermostatic valve unit.
Two-pipe valve angled version (wall connections) fits ½" female radiator connections.
Max. working pressure: 150 psi (10 bar).
Max. working temperature: 212°F (100°C).

Code	Radiator Connection	Pipe Connection	Lbs	USD
301140	½" straight	¾" conical	1	**68.40**

3012

Valve for panel radiators that have built-in thermostatic valve unit.
One-pipe straight version (floor connections) fits ½" female radiator connections.
With adjustable by-pass.
Balance knob.
Max. working pressure: 150 psi (10 bar).
Max. working temperature: 212°F (100°C).

Code	Radiator Connection	Pipe Connection	Lbs	USD
301241	½" straight	¾" conical	1	**120.00**

3013

Valve for panel radiators that have built-in thermostatic valve unit.
One-pipe angled version (wall connections) fits ½" female radiator connections.
With adjustable by-pass.
Balance knob.
Max. working pressure: 150 psi (10 bar).
Max. working temperature: 212°F (100°C).

Code	Radiator Connection	Pipe Connection	Lbs	USD
301341	½" straight	¾" conical	1	**120.00**

4499

Wall-covering plate.
Fits dual panel radiator valves 301.
With wall connections.
In white ABS.
Outlet center distance: 40—50 mm.

Code	Description	Lbs	USD
449901	Plate	0.1	**5.90**

CONNECTION FITTINGS

681 Universal PEX fittings

681 series fittings are compatible with any ASTM F876 single layer PEX.
Max. working pressure: 150 psi.
Working temperature for ASTM F876 PEX piping: 41—180ºF.
Chrome plated nut.

Code	Description	Lbs	USD
681503A	⅜" nominal PEX	0.2	**14.50**
681524	½" nominal PEX	0.2	**14.50**
681555	⅝" nominal PEX	0.2	**14.50**

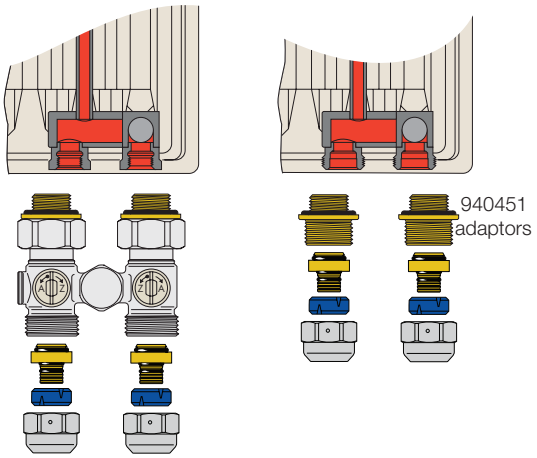

940

Radiator adapter for directly connecting a panel radiator with PEX, PEX-AL-PEX, sweat, NPT or compression fittings.
Package of 2 each, priced per package.

Code	Description	Lbs	USD
940451	½" M straight x ¾" M conical (2 ea.)	0.1	**26.20**

Wrench for tightening PEX fitting to TRV.

Code	Description	Lbs	USD
387100	26 mm x 30 mm	1.5	**65.80**

682 Universal PEX-AL-PEX fittings

682 series fittings are compatible with any ASTM F1281 multilayer PEX-AL-PEX pipe.
Max. working pressure: 150 psi.
Working temperature for ASTM F1281 PEX-AL-PEX piping: 41—200ºF with tubing rated 200ºF.

Code	Description	Lbs	USD
682540A	½" PEX-AL-PEX	0.2	**14.20**

437

Compression fitting, fits ½" hard copper.
With o-ring seal.
Max. working pressure: 150 psi.
Working temperature range: 41—250ºF.
Chrome plated.
For connecting copper to valve 301, 338, 339, 342 and 343 series.

Code	Description	Lbs	USD
437516	½" compression (2-pack)	0.1	**11.90**

NA102

Sweat connection fitting fits ½" copper.
Max. working pressure: 150 psi.
Working temperature range: 41—250ºF.
Chrome plated nut.
For connecting copper to valve 301, 338, 339, 342 and 343 series.

Code	Description	Lbs	USD
NA10262	½" sweat	0.2	**15.40**

NA103

NPT connection fitting.
Max. working pressure: 150 psi.
Working temperature range: 41—250ºF.
Chrome plated nut.
For connecting copper to valve 301, 338, 339, 342 and 343 series.

Code	Description	Lbs	USD
NA10313	½" NPT male	0.2	**16.60**

ZONE VALVES AND ZONE CONTROLS

This diagram is for illustration purposes only

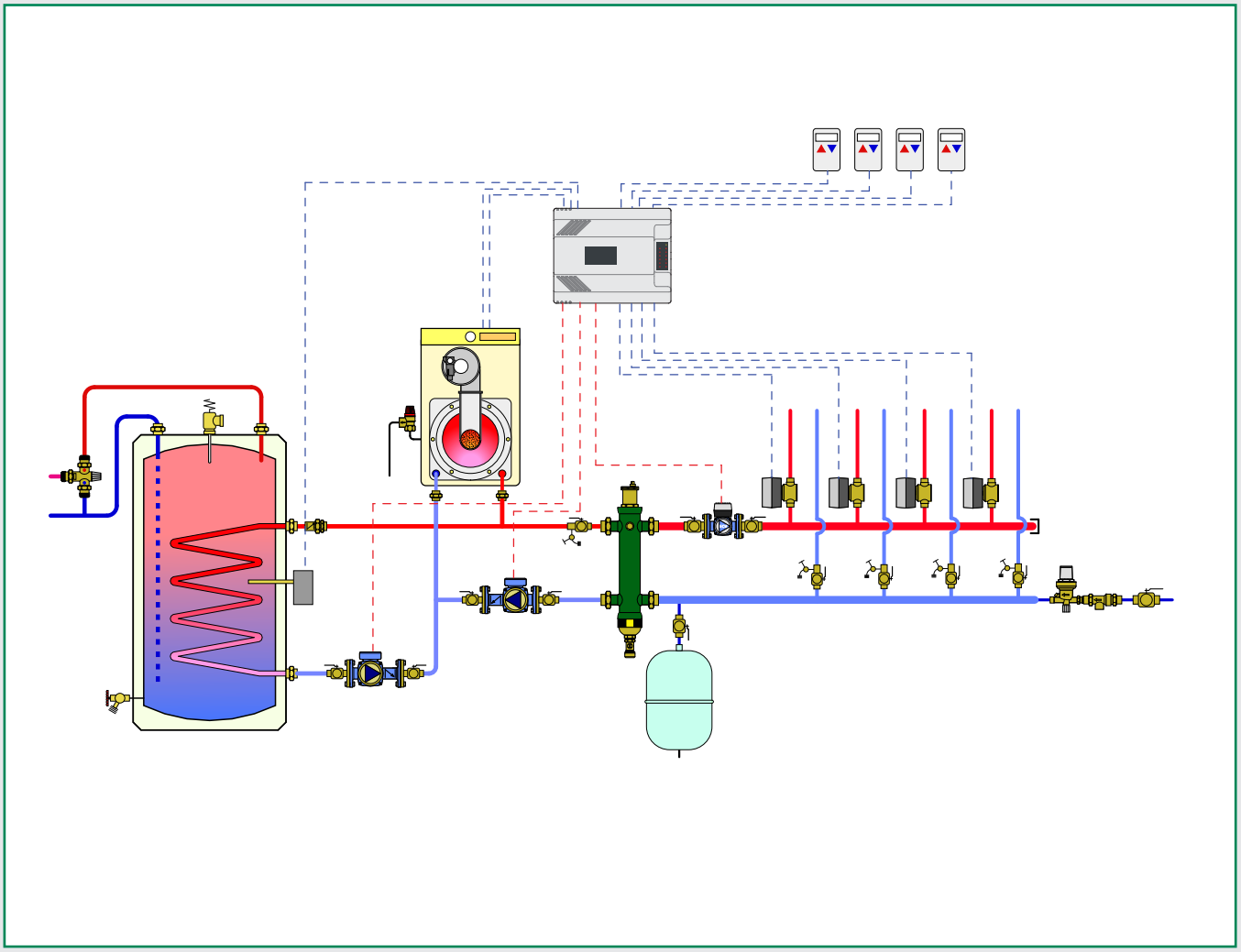

PRODUCTS INCLUDED IN SECTION

- Thermo-electric zone valves
- Thermo-electric actuators
- Motorized zone valves
- Pump zone controls
- Valve zone controls
- Motorized ball zone valves, high-flow, high-close off

THERMO-ELECTRIC ZONE VALVES

6767
TwisTop+™ High Performance

Complete with 656354 actuator.
Spring return. Normally closed.
Pressure balanced body.
Brass valve body and trim.
Max. body pressure: 150 psi.
Max. Temperature: 200°F.
Power supply: 24 V AC/DC.
Initial current draw: ≤ 250 mA.
Power consumption:
holding: 3 W
inrush: 6 VA
Rating of micro-switch contacts: 5 A (24 V).
31.5" wire lead connection.

Code	Description	Cv	ΔP	Lbs	USD
676756A	¾" press union	5.6	35 psi	2.2	**322.00**
676759A	¾" sweat union	5.6	35 psi	2.2	**313.00**
676758A	¾" PEX expansion union	5.6	35 psi	2.2	**313.00**
676766A	1" press union	5.6	35 psi	2.2	**363.00**
676769A	1" sweat union	5.6	35 psi	2.2	**350.00**
676768A	1" PEX expansion union	5.6	35 psi	2.2	**350.00**

6762
TwisTop™ Zone valve

Two-way thermo-electric zone valve.
Complete with TwisTop™ (code 656354) actuator. Spring return. Normally closed.
Brass valve body and trim.
Max. body pressure: 150 psi.
Max. Temperature: 200°F.
Power supply: 24 V AC/DC.
Initial current draw: ≤ 250 mA.
Power consumption:
holding: 3 W
inrush: 6 VA
Rating of micro-switch contacts: 5 A (24 V).
31.5" wire lead connection.

Code	Description	Cv	ΔP	Lbs	USD
676256A	¾" press union	4	20 psi	1.4	**282.00**
676259A	¾" sweat union	4	20 psi	1.4	**272.00**
676258A	¾" PEX expansion union NEW	4	20 psi	1.4	**272.00**
676266A	1" press union	4	20 psi	1.4	**323.00**
676269A	1" sweat union	4	20 psi	1.4	**310.00**
676268A	1" PEX expansion union NEW	4	20 psi	1.4	**310.00**

6564

Thermo-electric actuator fits on 676 two-way zone valve bodies.
Low current draw.
Protection class (installed in all positions): NEMA 3 (IP54)
Power supply: 24 V AC/DC.
Initial current draw: ≤ 250 mA.
Power consumption:
holding: 3 W
inrush: 6 VA
Rating of micro-switch contacts: 5 A (24 V).
31.5" wire lead connection.

Code	Description	Lbs	USD
656404	24 V AC/DC00	0.4	**114.00**
656414	24 V AC/DC with micro-switch	0.4	**144.00**

6563
TwisTop™

TwisTop™ thermo-electric actuator fits on 676 two-way valve.
Twist the top to manually open and close micro-switch.
Power supply: 24 V AC/DC.
Initial current draw: ≤ 250 mA.
Power consumption:
holding: 3 W
inrush: 6 VA
Rating of micro-switch contacts: 5 A (24 V).
31.5" wire lead connection.
US Patent 7,617,989 B2.

Code	Description	Lbs	USD
656344	24 V AC/DC	0.4	**153.00**
656354	24 V AC/DC with micro-switch	0.4	**181.00**

6760, 6765

Two-way zone valve body.
For field installation of thermo-electric actuators 6563 series or 6564 series.
Brass body and trim.
Max. body pressure: 150 psi.
Max. temperature: 200°F.
See fitting selection table in Section 8.
Select fittings with 1" nut.

Code	Description	Cv	Lbs	USD
676000A	body only, close-off 20 psid	4.3	0.5	**38.80**
676500A	body only, close-off 35 psid NEW	5.6	1	**82.80**

Up to 12 actuators per 40 VA transformer.

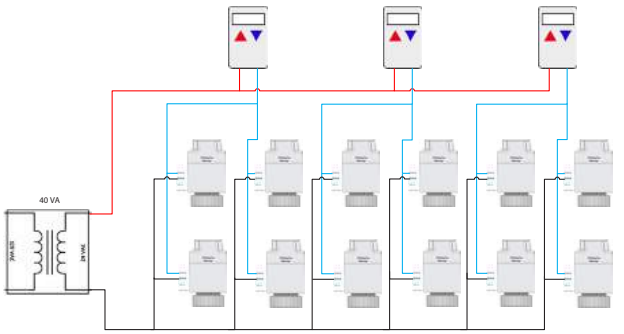

MOTORIZED ZONE VALVES

Z4
Z-one 2-way

Two-way zone valve. Spring return.
Normally closed actuator: Z111000.
Auxiliary micro-switch.
Max. body pressure: 300 psi.
Temperature range: 32º—240°F.
Suitable fluids: water, 50% max. glycol, 15 psi max. steam.
Power supply: 24 V AC.
Power consumption: 5 W, 7 VA.
Rating of auxiliary micro-switch contacts: 0.0 A min, 0.4 A max 24 V (24 V only).
18" wire lead connection.
UL873, cULus Listed & CE.
UL 1995 sec. 18 air plenums and ducts.
US Patent 7,048,251.

c UL E239721 US LISTED 86BP

Code	Description	Cv	Δ P	Lbs	USD
Z40	Inverted flare	3.5	30 psi	2.2	**229.00**
Z40F	¾" Inv flare*	3.5	30 psi	2.2	**259.00**
Z42	½" SAE flare	3.5	30 psi	2.2	**250.00**
Z44	½" sweat	2.5	50 psi	2.1	**223.00**
Z45	¾" sweat	7.5	20 psi	2.2	**243.00**
Z46	1" sweat	7.5	20 psi	2.3	**303.00**
Z47	1¼" sweat	7.5	20 psi	2.3	**353.00**

* Two ¾" sweat fittings (NA10006) included.

Z5
Z-one 2-way

Two-way zone valve. Spring return.
Normally closed actuator: Z151000
Auxiliary micro-switch.
Max. body pressure: 300 psi.
Temperature range: 32º—240°F.
Suitable fluids: water, 50% max. glycol, 15 psi max. steam.
Power supply: 24 V AC.
Power consumption: 5 W, 7 VA.
Rating of auxiliary micro-switch contacts: 0.0 A min, 0.4 A max 24 V (24 V only).
Screw terminal connection.
UL873, cULus Listed & CE.
UL 1995 sec. 18 air plenums and ducts.
US Patent 7,048,251.

c UL E239721 US LISTED 86BP

Code	Description	Cv	Δ P	Lbs	USD
Z50	Inverted flare	3.5	30 psi	2.2	**235.00**
Z50F	¾" Inv flare*	3.5	30 psi	2.2	**265.00**
Z54	½" sweat	2.5	50 psi	2.1	**229.00**
Z55	¾" sweat	7.5	20 psi	2.2	**250.00**
Z56	1" sweat	7.5	20 psi	2.3	**309.00**
Z57	1¼" sweat	7.5	20 psi	2.3	**358.00**

* Two ¾" sweat fittings (NA10006) included.

Z-one 2-way Press

Two-way zone valve. Spring return.
Normally closed actuator.
Auxiliary micro-switch.
Max. body pressure: 300 psi.
Overall length: 5-⅝"
Temperature range: 32—240°F.
Suitable fluids: water, 50% max. glycol, 15 psi max. steam.
Power supply: 24 V AC.
Power consumption: 5 W, 7 VA.
Rating of auxiliary micro-switch contacts: 0.0 A min, 0.4 A max 24 V (24 V only).
UL873, cULus Listed & CE.
UL 1995 sec. 18 air plenums and ducts.
US Patent 7,048,251.

c UL E239721 US LISTED 86BP

Code	Description	Cv	Δ P	Lbs	USD
Z44P	½" press*	3.5	30 psi	2.2	**308.00**
Z54P	½" press**	3.5	30 psi	2.2	**314.00**
Z45P	¾" press*	7.5	20 psi	2.2	**313.00**
Z55P	¾" press**	7.5	20 psi	2.2	**319.00**
Z45PL	¾" press*	7.5	20 psi	2.3	**343.00**
Z55PL	¾" press**	7.5	20 psi	2.3	**349.00**
Z46P	1" press*	7.5	20 psi	2.4	**355.00**
Z56P	1" press**	7.5	20 psi	2.4	**361.00**

*18" wire lead connection.
**Screw terminal connection.
PL (1) extra long press fitting for retrofit
Includes press fittings.

Inverted flare sweat adaptors fits Z40, Z50 and inverted flare valve body.

Code	Description	Lbs	USD
NA10005	½" sweat	0.3	**12.00**
NA10006	¾" sweat	0.3	**15.00**
NA10007	1" sweat	0.4	**24.60**
NA61241	Retrofit extension kit	0.2	**12.10**

Press Installation

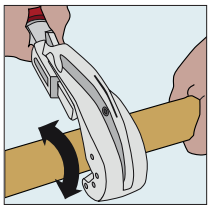

Cut tube end square and to desired length. Clean any debris from inside of tube. Deburr or ream inside and outside of tube.

Make sure surface is smooth and without burrs or sharp edges. Insert the tube into the fitting, make sure the tube is fully inserted and mark with a marker to indicate proper insertion depth (7/8").

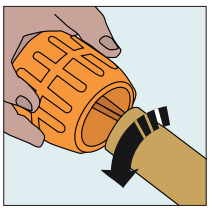

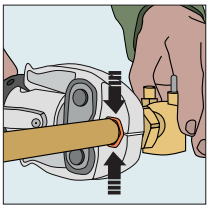

Check that the proper clamping jaws are installed and open jaw arms to set. Place jaw around valve end and double check proper insertion depth, press fitting.

MOTORIZED ZONE VALVES

E239721
US LISTED
86BP

Z1 Normally Closed

Z1 NC actuator fits on Z2 and Z3 series valve bodies with the push of a button.
Two position spring return normally closed.
7/8" knockout for 1/2" conduit connector.
Power: 24, 120, 208, 230 & 277 VAC.
Power consumption: 5 W, 7 VA.
Conduct connector size: ½".
Rating of auxiliary switch contacts:
24 VAC: 0.0 A min, 0.4 A max (24 V).
120-277 and Z111900 VAC: 0.25 A min, 5.0 A max (230 V).
UL873, cULus Listed & CE.
UL 1995 sec.18 air plenums and ducts.
US Patent 7,048,251.

Code	Description	Lbs	USD
Z111000	24 V, micro-switch, 18" wires	1.1	**158.00**
Z111900	24 V, high current switch, 18" wires	1.1	**148.00**
Z116000	120 V, micro-switch, 6" wires	1.1	**158.00**
Z113000	208 V, micro-switch, 6" wires	1.1	**189.00**
Z114000	230 V, micro-switch, 6" wires	1.1	**189.00**
Z115000	277 V, micro-switch, 6" wires	1.1	**189.00**
Z151000	24 V, micro-switch, terminal blocks	1.1	**164.00**
Z161000	24 V, terminal blocks	1.1	**151.00**
Z121000	24 V, 18" wires	1.1	**147.00**
Z126000	120 V, 6" wires	1.1	**147.00**
Z123000	208 V, 6" wires	1.1	**178.00**
Z124000	230 V, 6" wires	1.1	**178.00**
Z125000	277 V, 6" wires	1.1	**178.00**

Function

The Z-one™ valve is a truly universal zone valve that can be used in a wide range of commercial and residential applications; from fan coils to baseboard, radiant to high rise, the Z-one™ is the professional's valve of choice. The Z-one™ can be used in both chilled or hot water and low pressure steam applications. With Delta P close off pressures of up to 75 PSI, the Z-one™ outperforms all other zone valves. The Z-one™ is available in sizes from ½" to 1¼" sweat or NPT connections on valve body, with removable actuator available in 24 to 277 voltages.

Some models of Z-one™ actuators contain an auxiliary micro-switch to operate other devices. The 24 V actuators use a sealed reed switch, which has been produced specifically for use with relays, boiler contacts (TT) and DDC systems. It requires no minimum current load. The 120 V - 277 V actuators for applications requiring greater than 400 mA, use a conventional micro-switch with silver contacts. The auxiliary switch is activated when the valve is 60% open or when the actuator is manually opened.

• **Manual opening (Normally closed actuator only)** The valve can be opened manually by moving the lever for opening it. When the power is restored the manual control is automatically overridden. The auxiliary switch in 24 V actuators is tripped when the unit is put into manual open position. This helps during start up to check if the wiring is correct without firing the valve electrically with the thermostat.

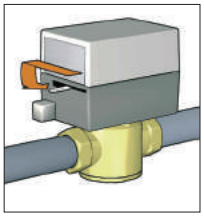

E239721
US LISTED
86BP

Z1 Normally Open

Z1 NO actuator fits on Z2 series valve bodies with the push of a button.
Two position spring return normally opened.
7/8" knockout for 1/2" conduit connector.
Power: 24, 120, 208, 230 & 277 VAC.
Power consumption: 5 W, 7 VA.
Conduct connector size: ½".
Rating of auxiliary switch contacts:
24 VAC: 0.0 A min, 0.4 A max (24 V).
120-277 VAC: 0.25 A min, 5.0 A max (230 V).
UL873, cULus Listed & CE.
UL 1995 sec. 18 air plenums and ducts.
US Patent 7,048,251.

Code	Description	Lbs	USD
Z131000	24 V, micro-switch, 18" wires	1.1	**173.00**
Z136000	120 V, micro-switch, 6" wires	1.1	**173.00**
Z133000	208 V, micro-switch, 6" wires	1.1	**204.00**
Z141000	24 V, 18" wires	1.1	**161.00**
Z146000	120 V, 6" wires	1.1	**161.00**
Z143000	208 V, 6" wires	1.1	**192.00**
Z144000	230 V, 6" wires	1.1	**192.00**
Z145000	277 V, 6" wires	1.1	**192.00**

Construction

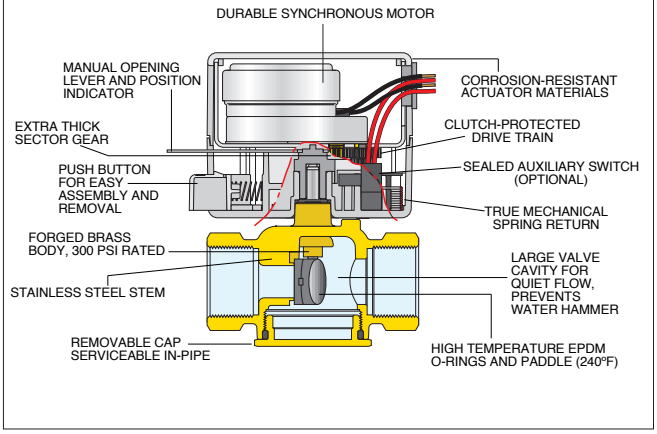

• **Easy push button**

A simple push of the button makes it easy to remove it from the body of the valve for maintenance or replacement operations. Warning: the actuator can only be used with valve bodies Z2-Z3 series.

• **Operation**

The actuator is fitted with a special mechanism for gradual movement of the valve paddle which provides smooth and quiet constant operation. Power-on full stroke run time is 60 seconds with 6 second power-off return time eliminating the effects of water hammer.

MOTORIZED ZONE VALVES

Z2
2-way

Two-way on/off two position valve.
Straight through flow pattern.
Brass body.
Stainless steel stem.
EPDM rubber seals and paddle.
Max. working pressure: 300 psi.
Max temperature: 240°F.

Code	Description		Cv	Δ P	Lbs	USD
Z200041	Inverted flare		1	75 psi	1.1	**70.60**
Z200042	Inverted flare		2.5	50 psi	1.1	**70.60**
Z200043	Inverted flare		3.5	30 psi	1.1	**70.60**
Z200053	½" SAE Flare		3.5	30 psi	1.1	**90.90**
Z200411	½" FNPT		1	75 psi	1.1	**70.60**
Z207411	½" FNPT	**LL**	1	75 psi	1.1	**96.70**
Z200412	½" FNPT		2.5	50 psi	1.1	**70.60**
Z200413	½" FNPT		3.5	30 psi	1.1	**70.60**
Z200431	½" sweat		1	75 psi	1	**64.70**
Z200432	½" sweat		2.5	50 psi	1	**64.70**
Z207433	½" sweat	**LL**	3.5	30 psi	1	**90.90**
Z200512	¾" FNPT		2.5	50 psi	1.2	**96.80**
Z200513	¾" FNPT		3.5	30 psi	1.2	**96.80**
Z200515	¾" FNPT		5	25 psi	1.2	**96.80**
Z200517	¾" FNPT		7.5	20 psi	1.2	**96.80**
Z200532	¾" sweat		2.5	50 psi	1.1	**85.30**
Z207533*	¾" sweat	**LL**	3.5	30 psi	1.1	**111.00**
Z200535	¾" sweat		5	25 psi	1.1	**85.30**
Z200537	¾" sweat		7.5	20 psi	1.1	**85.30**
Z207537*	¾" sweat	**LL**	7.5	20 psi	1.1	**111.00**
Z200617	1" FNPT		7.5	20 psi	1.3	**153.00**
Z200635	1" sweat		5	25 psi	1.2	**145.00**
Z200637	1" sweat		7.5	20 psi	1.2	**145.00**
Z200737	1¼" sweat		7.5	20 psi	1.3	**193.00**

LL Low-lead brass body.

Two-way and three-way zone valve body repair kit. Includes valve stem paddle with O-rings, C clip and one bottom cap O-ring.

Code	Description	Lbs	USD
F69293	Fits all ½" & ¾" sweat Z2, Z3 valves	0.4	**24.30**
F69294	Fits all ¾" NPT and all 1" Z2, Z3 valves	0.4	**24.30**

Z3
3-way

Three-way on/off two position valve.
Diverting flow pattern.
Brass body.
Stainless steel stem.
EPDM rubber seals and paddle.
Max. working pressure: 300 psi.
Max temperature: 240°F.

Code	Description		Cv	Δ P	Lbs	USD
Z300053	½" SAE Flare		3.5	30 psi	1.1	**113.00**
Z300411	½" FNPT		1	75 psi	1.1	**94.10**
Z300412	½" FNPT		2.5	50 psi	1.1	**94.10**
Z300413	½" FNPT		3.5	30 psi	1.1	**94.10**
Z300431	½" sweat		1	75 psi	1	**88.30**
Z300432	½" sweat		2.5	50 psi	1	**88.30**
Z307433*	½" sweat	**LL**	3.5	30 psi	1	**114.00**
Z300512	¾" FNPT		2.5	50 psi	1.2	**118.00**
Z300513	¾" FNPT		3.5	30 psi	1.2	**118.00**
Z300515	¾" FNPT		5	25 psi	1.2	**118.00**
Z300517	¾" FNPT		7.5	20 psi	1.2	**118.00**
Z300532	¾" sweat		2.5	50 psi	1.1	**109.00**
Z300533	¾" sweat		3.5	30 psi	1.1	**109.00**
Z300535	¾" sweat		5	25 psi	1.1	**109.00**
Z307537*	¾" sweat	**LL**	7.5	20 psi	1.1	**135.00**
Z300617	1" FNPT		7.5	20 psi	1.3	**177.00**
Z300635	1" sweat		5	25 psi	1.2	**164.00**
Z300637	1" sweat		7.5	20 psi	1.2	**164.00**
Z300737	1¼" sweat		7.5	20 psi	1.3	**200.00**

***LL** Low-lead brass body.

2-way male union valve body.
Select fittings in Section 8 Table.

Code	Description	Cv	Δ P	Lbs	USD
Z200683	1" male union body	3.5	30 psi	1.1	**96.80**
Z200687	1" male union body	7.5	20 psi	1.1	**96.80**

3-way male union valve body.
Select fittings in Section 8 Table.

Code	Description	Cv	Δ P	Lbs	USD
Z300687	1" male union body	7.5	20 psi	1.2	**123.00**

PUMP ZONE CONTROLS

Intertek 4009064
Certified to CSA C22-2 No.24
Conforms to UL Standard 873

ZSR
Z-one™ Relay

The ZSR series is multi-zone pump and boiler operating control for multiple zone hydronic heating systems. The ZSR series interfaces with low voltage thermostats, or any other low voltage controllers having a switching action. The ZSR series controls up to 3, 4, 5 or 6 heating circulator pumps, depending on model selected, a primary pump and has LED indicators to provide functional status and easy system troubleshooting. In addition, a primary pump system circulator is switched on whenever any zone calls for heat.

Power supply: 120 VAC, 50/60 Hz
Transformer voltage: 24 VAC
Maximum transformer load: 12 VA (ZSR101/103/104), 20 VA (ZSR106)
Electrical switch rating: 10A (ZSR101), 20A (ZSR103/4/6) max combined
Electrical switch rating pump output: 120 VAC, 5A each
Dry contact rating: AUX, XX, ZONE1 E/S: 120 VAC max, 2A each
Replaceable fuses: Type 2AG, 5A slow blow

Code	Description	Lbs	USD
ZSR101	Single zone relay	1.0	**179.00**
ZSR103	3 zone pump control	2.0	**420.00**
ZSR104	4 zone pump control	2.0	**493.00**
ZSR106	6 zone pump control	2.0	**604.00**

VALVE ZONE CONTROLS

Intertek 4009064
Certified to CSA C22-2 No.24
Conforms to UL Standard 873

ZVR
Z-one™ Relay

The ZVR series is a multi-zone valve relay and boiler operating control for multiple zone hydronic heating systems. The ZVR series interfaces with low voltage thermostats, or any other low voltage controllers having a switching action. The ZVR series controls up to 3, 4, 5 or 6 zones, depending on model selected. In addition, a system circulator pump and secondary pump is turned on whenever any zone calls for heat. LED indicators provide functional status and easy system troubleshooting. The ZVR series is a perfect match with Caleffi's Z-one™ motorized zone valves.

Power supply: 120 VAC, 50/60 Hz
Transformer voltage: 24 VAC
Maximum transformer load: 40 VA (ZVR103/4), 80 VA (ZVR106)
Electrical switch rating: 20A Max Combined
Electrical switch rating pumps: 120 VAC, 5A each
Dry contact rating: AUX, XX, ZONE1 E/S:120 VAC, 2A each
Resettable Fuse: automatic
High Capacity 40 VA Transformer standard for 3 and 4 zone models-expandable to 80 VA, and 80 VA for the 6 zone model

Code	Description	Lbs	USD
ZVR103	3 zone valve control	2.0	**319.00**
ZVR104	4 zone valve control	2.0	**381.00**
ZVR106	6 zone valve control	2.0	**493.00**
NA10343	Expansion transformer	0.1	**103.00**

Z-ONE RELAY FUSES

Code	Description	Lbs	USD
NA10342	Spare fuse (package of 5)	0.1	**17.20**

MOTORIZED BALL ZONE VALVES HIGH-FLOW, HIGH CLOSE-OFF

6442
2-way Straight

Two-way motorized ball zone valve.
Straight.
Max. ΔP close-off pressure: 150 psi.
Temperature range: 20°—230°F.
Power supply: 24 VAC.
Power consumption: 4 VA.
Rating of micro-switch contacts: 5 A (24 V).
3-wire control.
36" wire lead connection.

Code	Description	Cv	Lbs	USD
644250A	¾" NPT male union	13	2.3	**450.00**
644256A	¾" press union	13	2.4	**450.00**
644259A	¾" sweat union	13	2.3	**442.00**
644260A	1" NPT male union	13	2.3	**488.00**
644266A	1" press union	13	2.4	**492.00**
644269A	1" sweat union	13	2.3	**478.00**
NA644200*	body, with no fittings	13	1.0	**392.00**

*See fitting selection table in Section 8.

6443..3BY
3-way By-pass

Three-way motorized ball zone valve.
By-pass.
Max. ΔP close-off pressure: 150 psi.
Temperature range: 20°—230°F.
Power supply: 24 VAC.
Power consumption: 4 VA.
Rating of micro-switch contacts: 5 A (24 V).
3-wire control.
2.1 Cv in by-pass mode.
36" wire lead connection.

Code	Description	Cv	Lbs	USD
644350A 3BY	¾" NPT male union	12	2.5	**486.00**
644356A 3BY	¾" press union	12	2.6	**512.00**
644359A 3BY	¾" sweat union	12	2.5	**498.00**
644360A 3BY	1" NPT male union	12	2.5	**567.00**
644366A 3BY	1" press union	12	2.6	**574.00**
644369A 3BY	1" sweat union	12	2.5	**553.00**
NA644300 3BY*	body, no fittings	12	1.2	**424.00**

*See fitting selection table in Section 8.

6440
24 V 3-wire control

Actuator fits 6442 and 6443 series.
Power supply: 24 VAC.
Power consumption: 4 VA.
Rating of micro-switch contacts: 5 A (24 V).
Operating time: 40 s (90° rotation).
Length of supply cable: 36".

Code	Description	Lbs	USD
644004	24 VAC	1.0	**265.00**

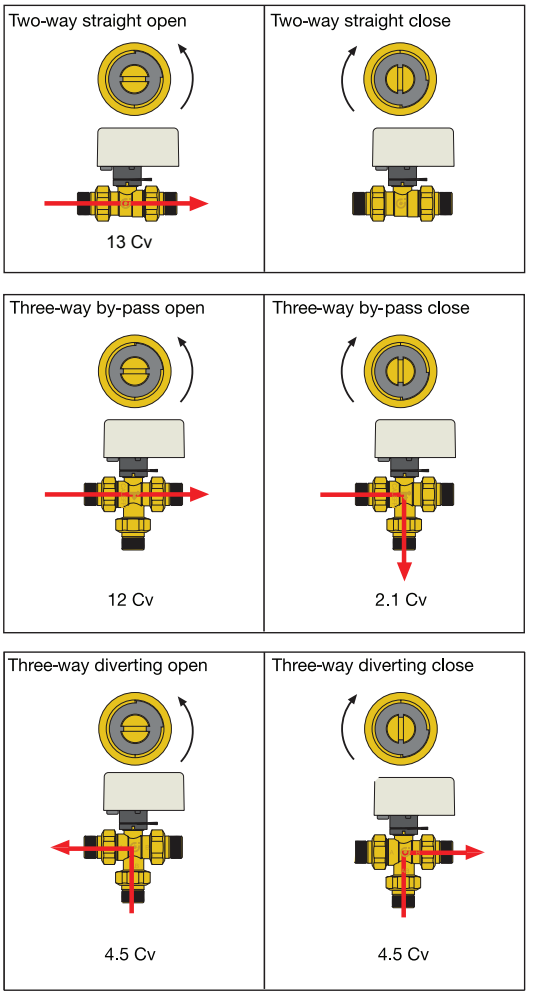

6443
3-way Diverting

Three-way motorized ball zone valve.
Diverting.
Max. ΔP close-off pressure: 150 psi.
Temperature range: 20°—230°F.
Power supply: 24 VAC.
Power consumption: 4 VA.
Rating of micro-switch contacts: 5 A (24 V).
3-wire control.
36" wire lead connection.

Code	Description	Cv	Lbs	USD
644350A	¾" NPT male union	4.5	2.5	**486.00**
644356A	¾" press union	4.5	2.6	**512.00**
644359A	¾" sweat union	4.5	2.5	**498.00**
644360A	1" NPT male union	4.5	2.5	**567.00**
644366A	1" press union	4.5	2.6	**574.00**
644369A	1" sweat union	4.5	2.5	**553.00**
NA644300*	body, no fittings	4.5	1.2	**424.00**

*See fitting selection table in Section 8.

DISTRIBUTION MANIFOLDS AND TEMPERATURE MIXING STATIONS

This diagram is for illustration purposes only

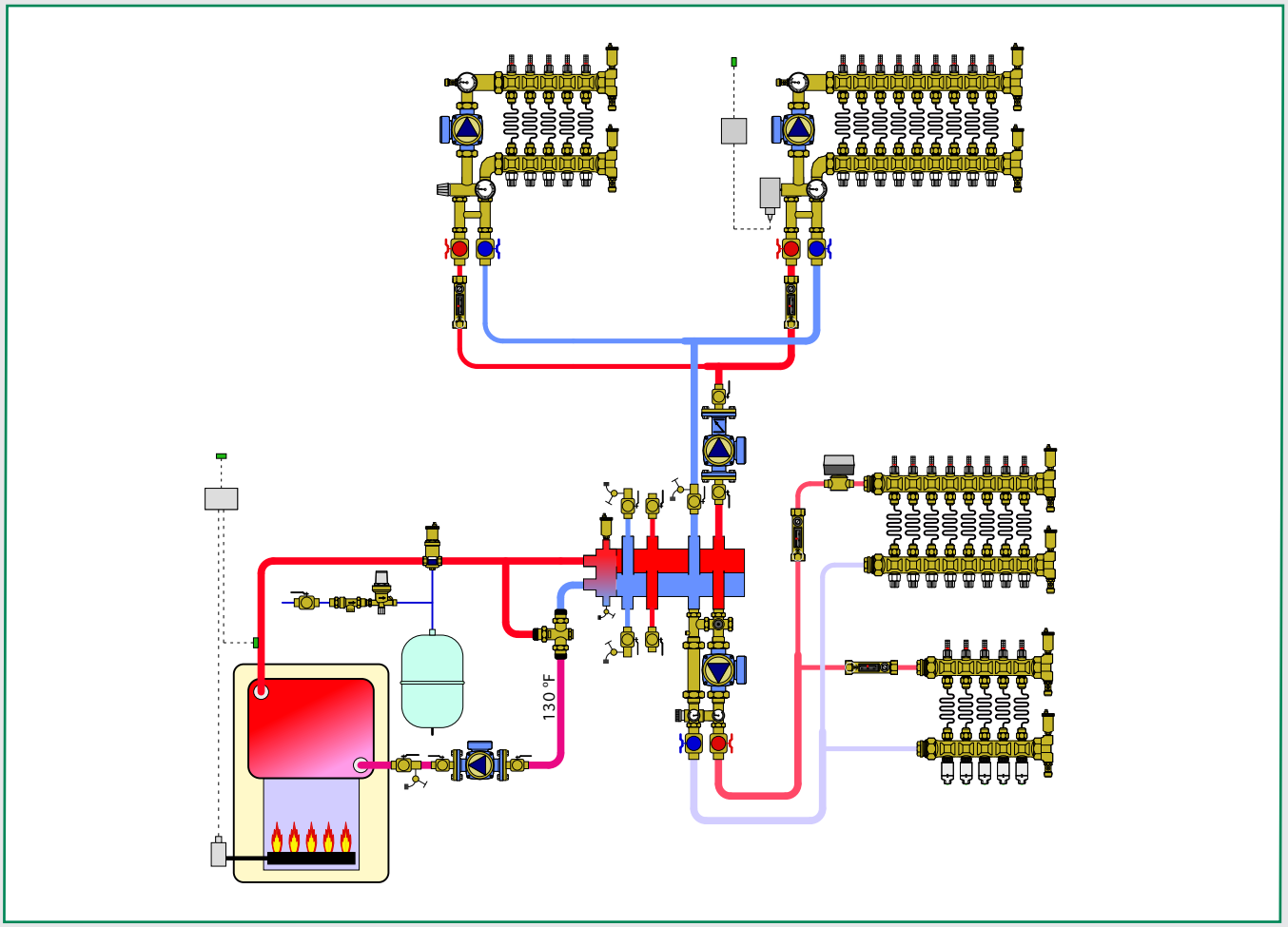

PRODUCTS INCLUDED IN SECTION

- Pump and valve temperature mixing units
- Thermostatic manifold mixing stations
- Manifold mixing stations
- Brass distribution manifolds
- Distribution manifolds
- Boxes for distribution manifolds
- Fittings for distribution manifolds and mixing stations
- Brass distribution manifold accessories
- Accessories

PUMP & VALVE TEMPERATURE MIXING UNITS

165 HydroMixer™

Injection pump mixing unit with insulation. Grundfos UPS 15-58 three speed pump.
Grundfos Alpha 25-55U pump.
Temperature gauges.
Shut-off ball valves.
Compatible with 5599 Hydrolink™ series Male union connections (select top and bottom fitting sets on page 35).
Max working pressure: 145 psi.
Max. working temperature: 212°F.
Power supply: 115 V 50/60 Hz.

Code	Description	Lbs	USD
165600A	Dual line with 15-58 pump on right	21	**1,575.00**
165610A	Dual line with 15-58 pump on left	21	**1,575.00**
165602A	Dual line with Alpha pump on right	21	**1,923.00**
165612A	Dual line with Alpha pump on left	21	**1,923.00**

5599 HydroLink with 165, 166, 167 HydroMixers

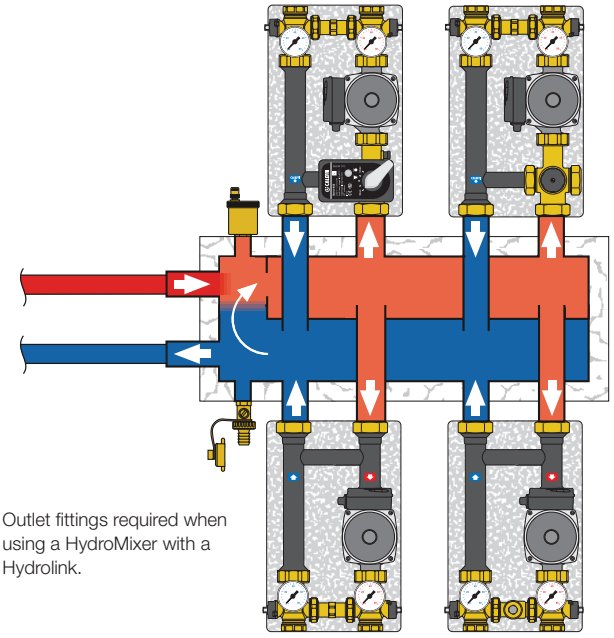

Outlet fittings required when using a HydroMixer with a Hydrolink.

Wall bracket fits 165, 166 and 167 series.

Code	Description	Lbs	USD
165001	Wall bracket	0.1	**87.90**

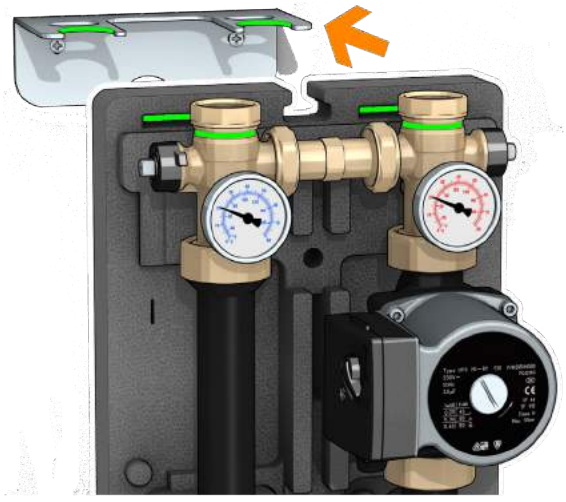

PUMP & VALVE TEMPERATURE MIXING UNITS

166 HydroMixer™

Thermostatic adjustable temperature mixing unit with insulation.
Grundfos UPS 15-58 three speed pump.
Grundfos Alpha 25-55U pump.
Temperature gauges.
Shut-off ball valves.
Compatible with 5599 Hydrolink™ series
Male union connections (select top and bottom fitting sets below).
Max working pressure: 145 psi.
Adjustable range: 80—125°F.
Power supply: 115 V 50/60 Hz.

Code	Description	Lbs	USD
166600A	Dual line with 15-58 pump on right	22	**1,923.00**
166610A	Dual line with 15-58 pump on left	22	**1,923.00**
166602A	Dual line with Alpha pump on right	22	**2,272.00**
166612A	Dual line with Alpha pump on left	22	**2,272.00**

Optional differential pressure by-pass valve fits 165, 166 and 167 series.

Code	Description	Lbs	USD
519006	Differential pressure by-pass valve	1.0	**99.00**

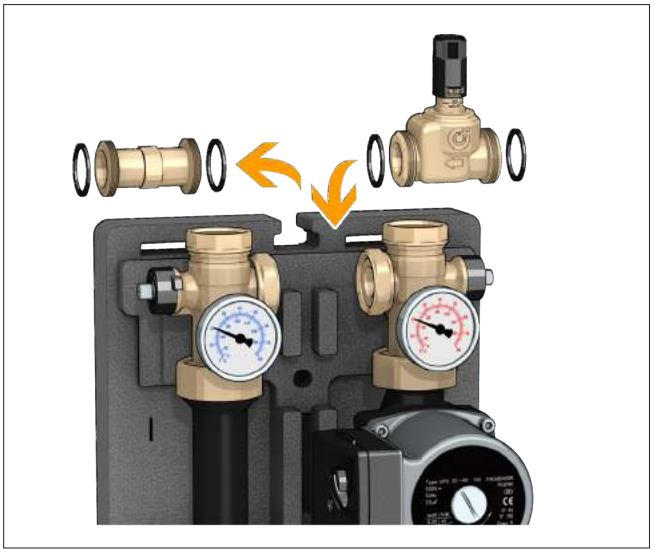

167 HydroMixer™

Motorized temperature mixing unit with insulation. Three-point floating 24 VAC actuator for use with separately-sourced outdoor reset controller.
Grundfos UPS 15-58 three speed pump.
Grundfos Alpha 25-55U pump.
Temperature gauges.
Shut-off ball valves.
Compatible with 5599 Hydrolink™ series
Male union connections (select top and bottom fitting sets below).
Max working pressure: 145 psi.
Primary inlet temperature range: 40-212°F
Power supply: 115 V 50/60 Hz.
Valve actuator: 24 V AC

Code	Description	Lbs	USD
167600A	Dual line with 15-58 pump on right	23	**2,272.00**
167610A	Dual line with 15-58 pump on left	23	**2,272.00**
167602A	Dual line with Alpha pump on right	23	**2,621.00**
167612A	Dual line with Alpha pump on left	23	**2,621.00**

Top outlet fitting set fits 165, 166, 167 series. Includes (2) 1¼" union nuts, (2) tail pieces and (2) washers. Will not fit bottom inlet thread.

Code	Description	Lbs	USD
NA16069	1" sweat union outlet fittings	1.0	**90.40**

Bottom Inlet fitting set fit 165, 166, 167 series. Includes (2) 1½" union nuts, (2) tail pieces and (2) washers. Will not fit top outlet thread.

Code	Description	Lbs	USD
NA16169	1" sweat union inlet fittings	1.0	**91.40**

Top outlet fitting set fits 165, 166, 167 series. Includes (2) 1¼" union nuts, (2) tail pieces and (2) washers. Will not fit bottom inlet thread.

Code	Description	Lbs	USD
NA16060	1" NPT male union outlet fittings	1.0	**102.00**

Bottom Inlet fitting set fit 165, 166, 167 series. Includes (2) 1½" union nuts, (2) tail pieces and (2) washers. Will not fit top outlet thread.

Code	Description	Lbs	USD
NA16160	1" NPT female union inlet fittings	1.0	**103.00**

THERMOSTATIC MANIFOLD MIXING STATIONS

172
Manifold mixing station three speed pump

Pre-assembled thermostatic manifold mixing station consisting of a supply distribution manifold complete with built-in sight flow gauges and adjustable balancing valves. Return manifold with built-in shutoff valves is suitable for thermo-electric actuators. Complete with built-in sensor to keep flow temperature at constant set value.
Includes Grundfos UPS 15—58 three-speed pump.
¾" F NPT supply/return ball valves.
Max. working pressure: 150 psi.
Control temperature range: 80°—130°F
Primary inlet max. temperature: 195°F
Outlet center distance: 2 in.
Models with "...IN" suffix are built inverted (tubing connections going upward).

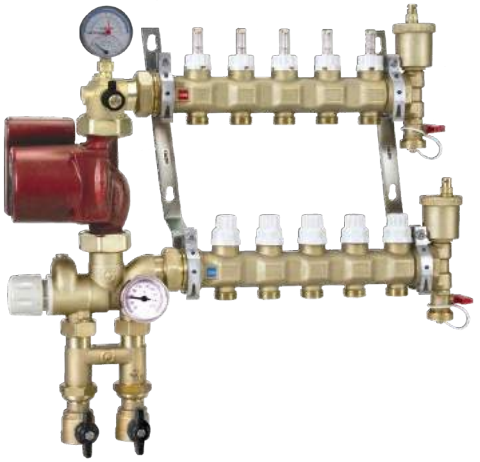

Code	Description	UPS Pump	No.	Outlets	Lbs	USD
1725C1A	¾"	15-58	3	¾" M	20	**1,835.00**
1725C1A IN	¾"	15-58	3	¾" M	20	**1,835.00**
1725D1A	¾"	15-58	4	¾" M	21	**1,953.00**
1725D1A IN	¾"	15-58	4	¾" M	21	**1,953.00**
1725E1A	¾"	15-58	5	¾" M	23	**2,071.00**
1725E1A IN	¾"	15-58	5	¾" M	23	**2,071.00**
1725F1A	¾"	15-58	6	¾" M	25	**2,189.00**
1725F1A IN	¾"	15-58	6	¾" M	25	**2,189.00**
1725G1A	¾"	15-58	7	¾" M	27	**2,309.00**
1725G1A IN	¾"	15-58	7	¾" M	27	**2,309.00**
1725H1A	¾"	15-58	8	¾" M	28	**2,426.00**
1725H1A IN	¾"	15-58	8	¾" M	28	**2,426.00**
1725I1A	¾"	15-58	9	¾" M	29	**2,545.00**
1725I1A IN	¾"	15-58	9	¾" M	29	**2,545.00**
1725L1A	¾"	15-58	10	¾" M	31	**2,663.00**
1725L1A IN	¾"	15-58	10	¾" M	31	**2,663.00**
1725M1A	¾"	15-58	11	¾" M	33	**2,780.00**
1725M1A IN	¾"	15-58	11	¾" M	33	**2,780.00**
1725N1A	¾"	15-58	12	¾" M	34	**2,900.00**
1725N1A IN	¾"	15-58	12	¾" M	34	**2,900.00**
1725O1A	¾"	15-58	13	¾" M	36	**3,017.00**
1725O1A IN	¾"	15-58	13	¾" M	36	**3,017.00**

172
Manifold mixing station high efficiency pump

Pre-assembled thermostatic manifold mixing station consisting of a supply distribution manifold complete with built-in sight flow gauges and adjustable balancing valves. Return manifold with built-in shutoff valves is suitable for thermo-electric actuators. Complete with built-in sensor to keep flow temperature at constant set value.
Includes Grundfos Alpha 25-55U pump.
¾" F NPT supply/return ball valves.
Max. working pressure: 150 psi.
Control temperature range: 80°—130°F
Primary inlet max. temperature: 195°F
Outlet center distance: 2 in.
Models with "...IN" suffix are built inverted (tubing connections going upward).

Code	Description	Alpha Pump	No.	Outlets	Lbs	USD
1725C1AHE	¾"	25-55U	3	¾" M	20	**2,202.00**
1725C1AHE IN	¾"	25-55U	3	¾" M	20	**2,202.00**
1725D1AHE	¾"	25-55U	4	¾" M	21	**2,320.00**
1725D1AHE IN	¾"	25-55U	4	¾" M	21	**2,320.00**
1725E1AHE	¾"	25-55U	5	¾" M	23	**2,438.00**
1725E1AHE IN	¾"	25-55U	5	¾" M	23	**2,438.00**
1725F1AHE	¾"	25-55U	6	¾" M	25	**2,556.00**
1725F1AHE IN	¾"	25-55U	6	¾" M	25	**2,556.00**
1725G1AHE	¾"	25-55U	7	¾" M	27	**2,674.00**
1725G1AHE IN	¾"	25-55U	7	¾" M	27	**2,674.00**
1725H1AHE	¾"	25-55U	8	¾" M	28	**2,792.00**
1725H1AHE IN	¾"	25-55U	8	¾" M	28	**2,792.00**
1725I1AHE	¾"	25-55U	9	¾" M	29	**2,911.00**
1725I1AHE IN	¾"	25-55U	9	¾" M	29	**2,911.00**
1725L1AHE	¾"	25-55U	10	¾" M	31	**3,030.00**
1725L1AHE IN	¾"	25-55U	10	¾" M	31	**3,030.00**
1725M1AHE	¾"	25-55U	11	¾" M	33	**3,147.00**
1725M1AHE IN	¾"	25-55U	11	¾" M	33	**3,147.00**
1725N1AHE	¾"	25-55U	12	¾" M	34	**3,267.00**
1725N1AHE IN	¾"	25-55U	12	¾" M	34	**3,267.00**
1725O1AHE	¾"	25-55U	13	¾" M	36	**3,384.00**
1725O1AHE IN	¾"	25-55U	13	¾" M	36	**3,384.00**

THERMOSTATIC MANIFOLD MIXING STATIONS

Characteristic components / hydraulic diagram

Item	Description	Symbol
1	Circulation pump UPS 15-58 pictured	
2	Top elbow with supply temperature and pressure gauge	
3	Purge valve	
4	Supply temperature and pressure gauge	
5	Return temperature gauge	
6	Primary circuit shut-off valves	
7	Primary circuit hydraulic separator with check valve	
8	Thermostatic three-way mixing valve with built-in sensor	

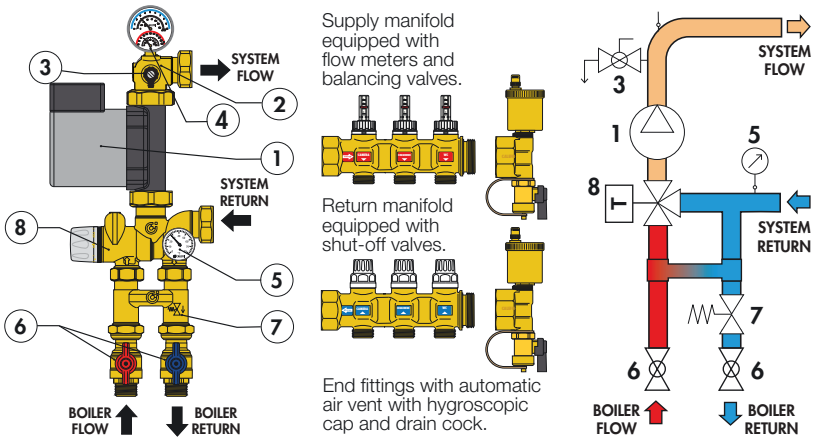

Function

The 172 series manifold mixing station is designed for use in manifold-based hydronic distribution systems. The manifold mixing station incorporates a thermostatic actuator with built-in sensor which keeps the flow temperature at a constant set value for use in low temperature systems such as floor radiant panels. A removable primary circuit hydraulic separator with check valve is also supplied. The hydraulic separator is essential when there is a primary circuit circulation pump and when radiator circuits or fan coils are controlled by thermostatic or thermo-electric valves. When connecting to a Caleffi HYDROLINK™ or hydraulic separator without a primary pump, the hydraulic separator can be removed and the manifold mixing station can be connected directly. The 172 station, like the TWISTFLOW™ Series 668S1 distribution manifolds, can be configured with 3 to 13 circuit outlets offering similar benefits with built-in sight flow meters/adjustable balancing valves and optional TWISTOP™ thermo-electric zone actuators.

MANIFOLD MIXING STATIONS

Thermostatic mixing station kit

For field assembly to a Caleffi radiant manifold assembly.
Grundfos UPS 15—58 three-speed pump or Alpha 25-55U.
1" NPT male adapters included to connect to manifold.
¾" NPT female riser connections.
Includes built-in hydraulic separator.

Code	Description	Lbs	USD
NA17256HE	Thermostatic mixing, Alpha 25-55U	4.1	**1,699.00**
NA17256	Thermostatic mixing, UPS 15-58U	4.1	**1,332.00**
NA16002	Alpha 25-55U replacement pump	2.3	**729.00**
NA10038	UPS 15-58U replacement pump	2.3	**359.00**
F19153	Replacement mixing valve	1.6	**404.00**

BRASS DISTRIBUTION MANIFOLDS

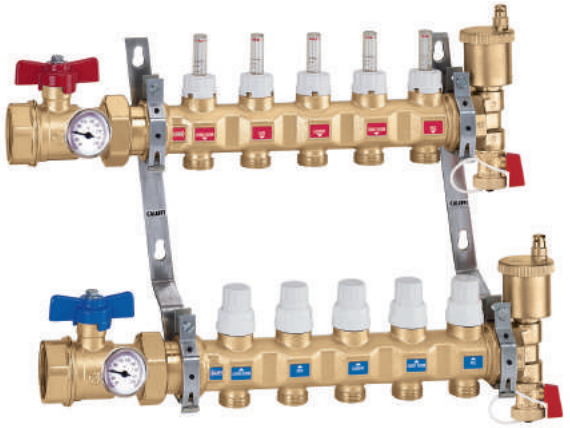

668S1
TwistFlow™ Assembly

Pre-assembled radiant manifold consisting of return distribution manifold complete with built-in shut-off valves suitable for thermo-electric actuator and supply distribution manifold complete with built-in sight flow meters and balancing valves with 2" gauges 30—210°F scale.
1" or 1¼" NPT inlet ball valves.
Temperature gauges.
Max. working pressure: 150 psi.
Max. working temperature: 180°F.
Max: peak temperature: 200°F.
Loop Cv: 1.23 (combined supply & return ports).
Flow meter scale: ¼ — 2 gpm.
Outlet center distance: 2 in.

Models with "...IN" suffix are built inverted (tubing connections going upward).

Code	Description	No.	Outlets	Lbs	USD
6686C5S1A	1"	3	¾" M	17	**847.00**
6686C5S1A IN	1"	3	¾" M	17	**847.00**
6686D5S1A	1"	4	¾" M	18	**970.00**
6686D5S1A IN	1"	4	¾" M	18	**970.00**
6686E5S1A	1"	5	¾" M	19	**1,093.00**
6686E5S1A IN	1"	5	¾" M	19	**1,093.00**
6686F5S1A	1"	6	¾" M	21	**1,216.00**
6686F5S1A IN	1"	6	¾" M	21	**1,216.00**
6686G5S1A	1"	7	¾" M	23	**1,338.00**
6686G5S1A IN	1"	7	¾" M	23	**1,338.00**
6686H5S1A	1"	8	¾" M	24	**1,462.00**
6686H5S1A IN	1"	8	¾" M	24	**1,462.00**
6686I5S1A	1"	9	¾" M	26	**1,585.00**
6686I5S1A IN	1"	9	¾" M	26	**1,585.00**
6686L5S1A	1"	10	¾" M	28	**1,708.00**
6686L5S1A IN	1"	10	¾" M	28	**1,708.00**
6686M5S1A	1"	11	¾" M	29	**1,831.00**
6686M5S1A IN	1"	11	¾" M	29	**1,831.00**
6686N5S1A	1"	12	¾" M	31	**1,954.00**
6686N5S1A IN	1"	12	¾" M	31	**1,954.00**
6686O5S1A	1"	13	¾" M	33	**2,078.00**
6686O5S1A IN	1"	13	¾" M	33	**2,078.00**

Code	Description	No.	Outlets	Lbs	USD
6687C5S1A	1¼"	3	¾" M	17	**898.00**
6687C5S1A IN	1¼"	3	¾" M	17	**898.00**
6687D5S1A	1¼"	4	¾" M	18	**1,021.00**
6687D5S1A IN	1¼"	4	¾" M	18	**1,021.00**
6687E5S1A	1¼"	5	¾" M	19	**1,145.00**
6687E5S1A IN	1¼"	5	¾" M	19	**1,145.00**
6687F5S1A	1¼"	6	¾" M	21	**1,266.00**
6687F5S1A IN	1¼"	6	¾" M	21	**1,266.00**
6687G5S1A	1¼"	7	¾" M	23	**1,389.00**
6687G5S1A IN	1¼"	7	¾" M	23	**1,389.00**
6687H5S1A	1¼"	8	¾" M	24	**1,513.00**
6687H5S1A IN	1¼"	8	¾" M	24	**1,513.00**
6687I5S1A	1¼"	9	¾" M	26	**1,636.00**
6687I5S1A IN	1¼"	9	¾" M	26	**1,636.00**
6687L5S1A	1¼"	10	¾" M	28	**1,759.00**
6687L5S1A IN	1¼"	10	¾" M	28	**1,759.00**
6687M5S1A	1¼"	11	¾" M	29	**1,881.00**
6687M5S1A IN	1¼"	11	¾" M	29	**1,881.00**
6687N5S1A	1¼"	12	¾" M	31	**2,005.00**
6687N5S1A IN	1¼"	12	¾" M	31	**2,005.00**
6687O5S1A	1¼"	13	¾" M	33	**2,128.00**
6687O5S1A IN	1¼"	13	¾" M	33	**2,128.00**

Manifolds and accessories

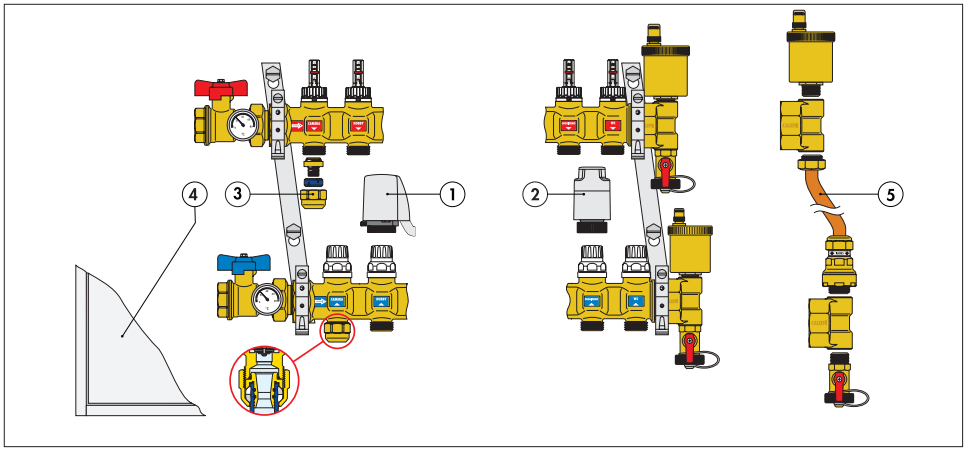

1. Thermo-electric actuator 6564 series.
2. Thermo-electric actuator with manual open handle, 6563 series.
3. Self-adjusting Universal PEX fitting, 680, 682 series.
4. Inspection wall box, 659 series.
5. Differential by-pass kit, code 668000.

DISTRIBUTION MANIFOLDS

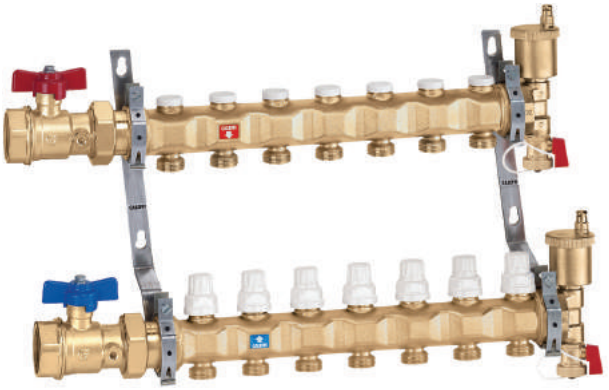

663
Pre-assembled distribution assembly

Pre-assembled distribution assembly consisting of return distribution manifold complete with built-in shut-off valves suitable for thermo-electric actuator and supply distribution manifold complete with manually-adjustable balancing valves.
1" or 1¼" NPT inlet ball valves.
Loop Cv: 2.3 (combined supply & return ports).
Max. working pressure: 150 psi.
Max: temperature: 210°F.
Outlet center distance: 2 in.

Models with "...IN" suffix are built inverted (tubing connections going upward).

Code	Description	No.	Outlets	Lbs	USD
6636C5A	1"	3	¾" M	17	**693.00**
6636C5A IN	1"	3	¾" M	17	**693.00**
6636D5A	1"	4	¾" M	18	**801.00**
6636D5A IN	1"	4	¾" M	18	**801.00**
6636E5A	1"	5	¾" M	19	**908.00**
6636E5A IN	1"	5	¾" M	19	**908.00**
6636F5A	1"	6	¾" M	21	**1,015.00**
6636F5A IN	1"	6	¾" M	21	**1,015.00**
6636G5A	1"	7	¾" M	23	**1,123.00**
6636G5A IN	1"	7	¾" M	23	**1,123.00**
6636H5A	1"	8	¾" M	24	**1,231.00**
6636H5A IN	1"	8	¾" M	24	**1,231.00**
6636I5A	1"	9	¾" M	26	**1,338.00**
6636I5A IN	1"	9	¾" M	26	**1,338.00**
6636L5A	1"	10	¾" M	28	**1,447.00**
6636L5A IN	1"	10	¾" M	28	**1,447.00**
6636M5A	1"	11	¾" M	29	**1,554.00**
6636M5A IN	1"	11	¾" M	29	**1,554.00**
6636N5A	1"	12	¾" M	31	**1,661.00**
6636N5A IN	1"	12	¾" M	31	**1,661.00**
6636O5A	1"	13	¾" M	33	**1,769.00**
6636O5A IN	1"	13	¾" M	33	**1,769.00**
6636P5A	1"	14	¾" M	35	**2,078.00**
6636P5A IN	1"	14	¾" M	35	**2,078.00**

Code	Description	No.	Outlets	Lbs	USD
6637C5A	1¼"	3	¾" M	17	**738.00**
6637C5A IN	1¼"	3	¾" M	17	**738.00**
6637D5A	1¼"	4	¾" M	18	**844.00**
6637D5A IN	1¼"	4	¾" M	18	**844.00**
6637E5A	1¼"	5	¾" M	19	**953.00**
6637E5A IN	1¼"	5	¾" M	19	**953.00**
6637F5A	1¼"	6	¾" M	21	**1,061.00**
6637F5A IN	1¼"	6	¾" M	21	**1,061.00**
6637G5A	1¼"	7	¾" M	23	**1,168.00**
6637G5A IN	1¼"	7	¾" M	23	**1,168.00**
6637H5A	1¼"	8	¾" M	24	**1,276.00**
6637H5A IN	1¼"	8	¾" M	24	**1,276.00**
6637I5A	1¼"	9	¾" M	26	**1,383.00**
6637I5A IN	1¼"	9	¾" M	26	**1,383.00**
6637L5A	1¼"	10	¾" M	28	**1,491.00**
6637L5A IN	1¼"	10	¾" M	28	**1,491.00**
6637M5A	1¼"	11	¾" M	29	**1,598.00**
6637M5A IN	1¼"	11	¾" M	29	**1,598.00**
6637N5A	1¼"	12	¾" M	31	**1,707.00**
6637N5A IN	1¼"	12	¾" M	31	**1,707.00**
6637O5A	1¼"	13	¾" M	33	**1,815.00**
6637O5A IN	1¼"	13	¾" M	33	**1,815.00**
6636P5A	1¼"	14	¾" M	35	**2,078.00**
6636P5A IN	1¼"	14	¾" M	35	**2,078.00**

Construction

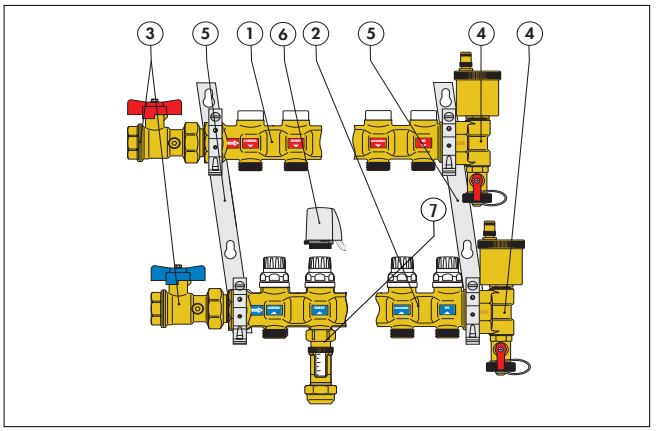

1. Supply manifold.
2. Return manifold complete with shut-off valves that can be used with thermo-electric actuators.
3. Pair of shut-off ball valves (complete with port for optional temperature gauge only for 1 1/4" version).
4. End fittings consisting of a 3-way end fitting, automatic air vent valve and drain cock.
5. Pair of mounting brackets for use with series 659 boxes or direct wall installation.
6. Thermo-electric actuator, series 6564 or 6563.
7. Flow meter, code NA669.

BOXES FOR DISTRIBUTION MANIFOLDS

659
Manifold cabinet

Housing wall box fits 663 and 668S1 series manifolds.
Adjustable depth: 4⅜"— 5½".
Powder coated painted 18 gauge sheet metal.
With push-fit clamp.

Code	Description	H	Max Outlets	Lbs	USD
659044	16" width	20"	3	17	**447.00**
659064	24" width	20"	6	23	**487.00**
659084	32" width	20"	10	30	**573.00**
659104	40" width	20"	13	37	**659.00**
659124	48" width"	20"	17	44	**745.00**

Rough opening dimensions

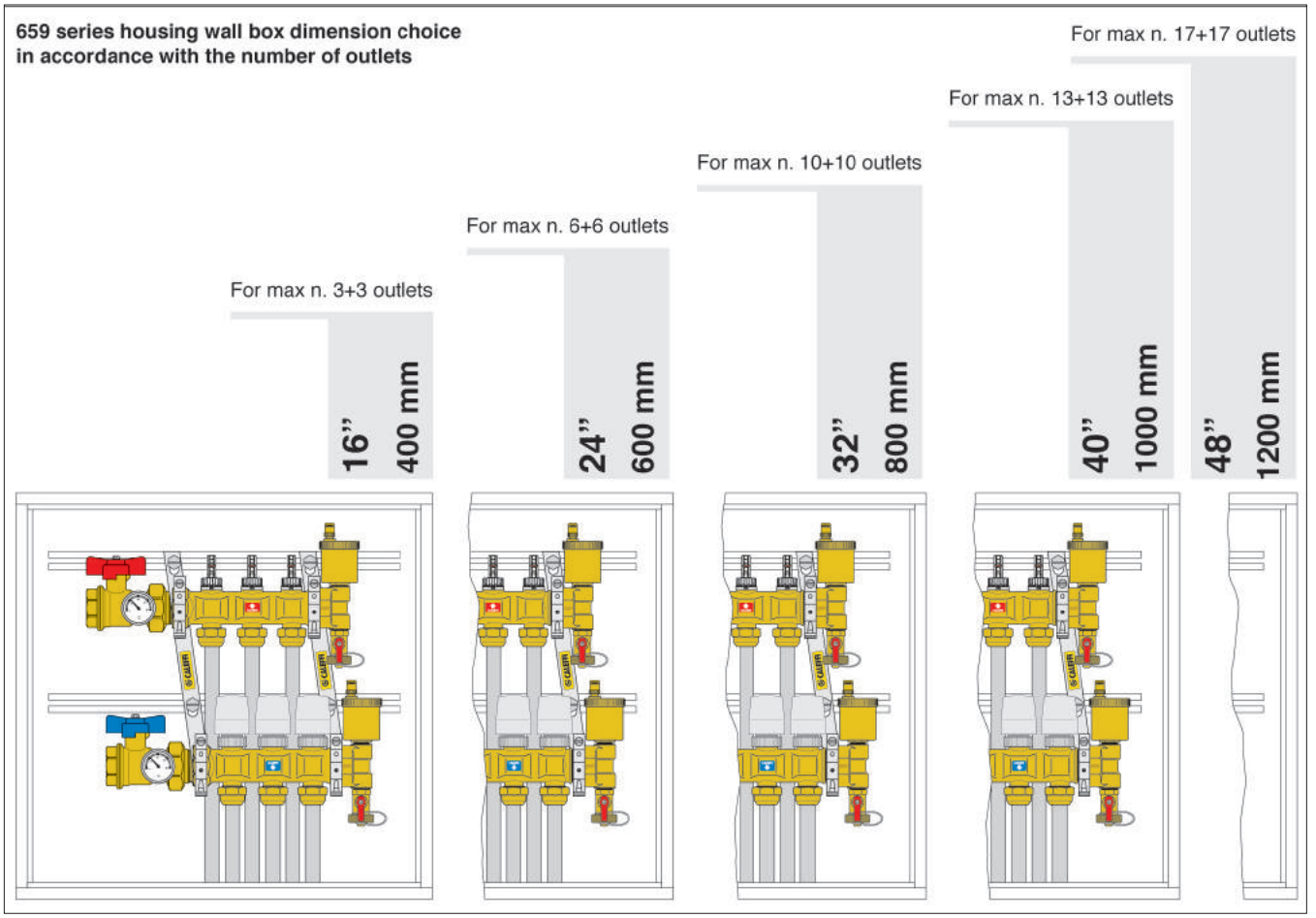

FITTINGS FOR DISTRIBUTION MANIFOLDS AND MIXING STATIONS

(680504A shown)

680 Universal PEX fittings

680 series fittings are compatible with any ASTM F876 single layer PEX.
Max. working pressure: 150 psi.
Working temperature range for ASTM F876 PEX piping: 40—180°F.

Code	Description	Compression ring	Lbs	USD
680507	5/16" nominal PEX	Blue	0.2	**13.80**
680503A	3/8" nominal PEX	Black	0.2	**13.80**
680504A	½" nominal PEX	Blue	0.2	**13.80**
680555A	5/8" nominal PEX	Black	0.2	**13.80**
680505A	¾" nominal PEX	Brass	0.2	**13.80**

(682530A shown)

682 Universal PEX-AL-PEX fittings

682 series fittings are compatible with any ASTM F1281 multilayer PEX-AL-PEX pipe.
Max. working pressure: 150 psi.
Working temperature range for ASTM F1281 PEX-AL-PEX piping: 40—200°F with tubing rated 200°F.

Code	Description	Lbs	USD
682530A	3/8" nominal PEX-AL-PEX	0.2	**14.20**
682540A	½" nominal PEX-AL-PEX	0.2	**14.20**
682545A	5/8" nominal PEX-AL-PEX	0.2	**15.30**
682550A	¾" nominal PEX-AL-PEX	0.2	**27.00**

Construction details
There is a large variety of PEX and PEX-AL-PEX pipes available with a wide range of permissible tolerances. This fitting is designed to adapt to several pipe diameter tolerances. This innovative solution for mechanical fittings has been constructed so that the same fitting can be used for pipes with different external diameter tolerances and differences on internal diameters tolerances while maintaining the nominal dimensions.

Resistance to pull out
This fitting offers a high degree of resistance to pull out of pipe. Its special clamping system makes it suitable for every application and ensures a leak tight fit.

Low pressure losses
The internal profile of the adapter (1) is shaped to obtain a Venturi effect when the fluid passes through, reducing pressure losses by 20%, compared to a similar diameter.

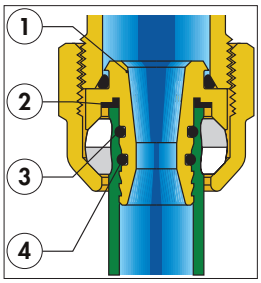

Insulation ring
The fitting is equipped with a rubber insulation element (2) to prevent contact between the aluminium in PEX-AL-PEX pipe and the brass fitting, thus preventing galvanic corrosion generated by the two different metals.

Dual O-ring seal
The adapter is equipped with two O-ring seals (3) and (4) in EPDM to prevent leaks even when operating at high pressure.

NA102

Sweat connection fitting fits ½" copper.
Max. working pressure: 150 psi.
Working temperature range: 41—250°F.
Chrome plated nut.
Does not work with 668S1 and 172 series.

Code	Description	Lbs	USD
NA10262	½" sweat	0.2	**15.40**

NA103

NPT connection fitting.
Max. working pressure: 150 psi.
Working temperature range: 41—250°F.
Chrome plated nut.
Does not work with 668S1 and 172 series.

Code	Description	Lbs	USD
NA10313	½" NPT male	0.2	**16.60**

386

Cap to plug unused manifold outlets on 592, 663 and 668S1 series.

Code	Description	Lbs	USD
386500	¾" straight thread	0.2	**13.80**

Double nipple for coupling PEX fittings.

Code	Description	Lbs	USD
942550	¾" x ¾" thread	0.1	**17.20**

Wrench for tightening PEX fitting to manifolds.

Code	Description	Lbs	USD
387100	26 mm x 30 mm	1.5	**65.80**

BRASS DISTRIBUTION MANIFOLD ACCESSORIES

668

Off-center by-pass assembly with fixed crack setting of 3.6 psi differential pressure.
Max working pressure: 150 psi.
Working temperature range: 15—230°F.

Code	Description	Lbs	USD
668000	½" x ½"	0.5	**131.00**

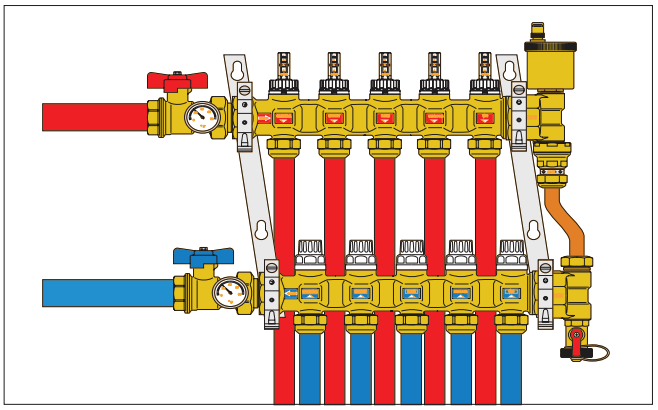

The by-bass valve contains a check valve connected to a contact spring. When the fixed setting pressure is reached, the valve disk gradually opens, recirculating the flow in proportion to the closing of the thermo-electric valves and maintaining a constant differential pressure in the manifold circuit.

The differential by-pass assembly features a fixed setting that cannot be changed. The small, compact size and offset connections makes this kit particularly easy to mount after installing thermo-electric valves on the manifold. It does not require a larger or deeper zone box than those used for normal manifolds.

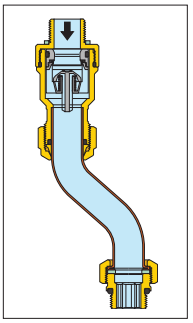

Simply twist to manually open actuator (and activate micro switch on 656354).
When power is applied, it returns to Auto position.

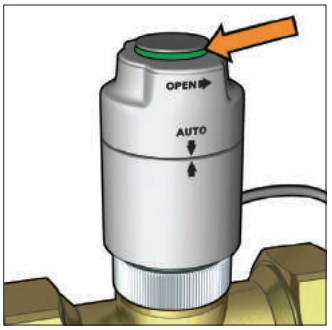

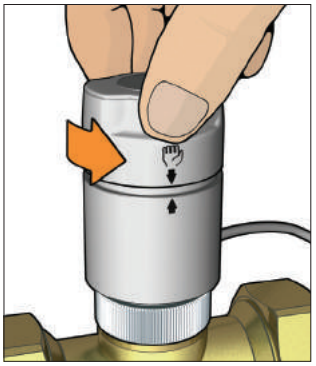

Green ring indicates valve is open.

6564

Low current draw thermo-electric actuator.
Hermetically sealed for upside down installation..
Pop-up feature
Power supply: 24 V AC/DC.
Initial current draw: ≤ 250 mA.
Power consumption: 3 W.
Rating of micro-switch contacts: 5 A (24 V).
31.5" wire lead connection.

Code	Description	Lbs	USD
656404	24 V AC/DC	0.4	**114.00**
656414	24 V AC/DC with micro-switch	0.4	**144.00**

6563 TwisTop™

TwisTop™ thermo-electric actuator.
Twist the top to manually open.
Power supply: 24 V AC/DC.
Initial current draw: ≤ 250 mA.
Power consumption: 3 W.
Rating of micro-switch contacts: 5 A (24 V).
31.5" wire lead connection.
US Patent 7,617,989 B2.

Code	Description	Lbs	USD
656344	24 V AC/DC	0.4	**153.00**
656354	24 V AC/DC with micro-switch	0.4	**181.00**
656354R	24 V AC/DC with micro-switch Rehau	0.4	**198.00**

Up to 12 actuators per 40 VA transformer.

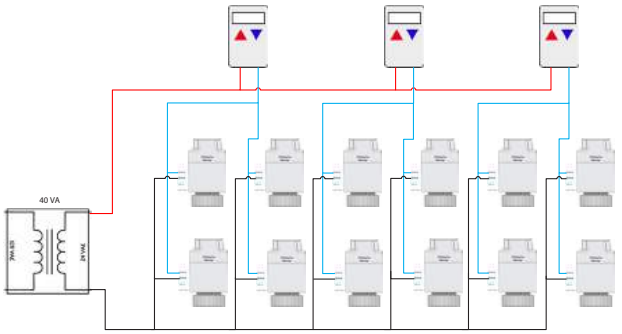

ACCESSORIES

Replacement balance/flow meter fits 668S1 series manifold.
Flow meter scale: ¼ — 2 gpm.

Code	Description	Lbs	USD
F69600	Fits 668S1 supply manifold	0.2	**40.20**

Replacement shut-off valve fits 668S1 series manifold.

Code	Description	Lbs	USD
F69590	Fits 668S1 return manifold	0.3	**32.10**

Replacement balancing valve fits 668 series manifold.

Code	Description	Lbs	USD
F69184	Fits 668 supply manifold	0.2	**28.00**

Replacement shut-off valve fits 668 & 663 series manifold.

Code	Description	Lbs	USD
69122 CST	Fits 668 & 663 return manifold	0.3	**17.90**

Replacement balancing valve for 663 series manifold.

Code	Description	Lbs	USD
R69176	Fits 663 supply manifold	0.3	**27.50**

NA669

Flow meter fits manifolds.
Max: temperature: 180°F (669050).
Max: temperature: 210°F (NA669 series).
¾" straight male x ¾" straight female connections.

Code	Description	Lbs	USD
669050	1 — 4 LPM	0.4	**47.40**
NA669150	¼ — 1 GPM High Temp.	0.3	**47.40**
NA669250	½ — 2 GPM High Temp.	0.3	**47.40**

White replacement knob fits 663 and 668S1 series manifolds.

Code	Description	Lbs	USD
449000	Knob	0.5	**13.90**

5020

Replacement air vent fits radiant manifolds.
Brass body.
Hygroscopic safety air vent cap.
Max. working pressure: 150 psi
Max discharge pressure: 60 psi
Max. working temperature: 250ºF.

Code	Description	Lbs	USD
502043 CST	½" straight thread	0.6	**35.40**

Plastic replacement/test cap fits 5020 series.

Code	Description	Lbs	USD
R56214	Vent cap	0.1	**2.90**

675

Snap-on thermometer directly to PEX, PEX-AL-PEX and copper piping.
Box of 10 comes with 1 syringe of thermo conductive paste.

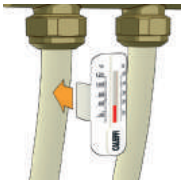

Code	Description	Lbs	USD
675900A	¾" & ⅝" PEX & ½" copper	0.2	**15.00**
R69413	Syringe of thermo conductive paste	0.1	**10.50**

688

Temperature gauge with well pocket fitting for inserting into manifold ball valves.
Working Temperature range: 30—210º F.
Face dial diameter: 2".

Code	Description	Lbs	USD
R39591	Replacement gauge	0.1	**36.40**
688003A	Gauge with pocket well	0.2	**55.80**
NA10498	Replacement pocket well, low lead	0.1	**5.50**
F67037	O-ring fits NA10498	0.1	**1.20**

MIXING VALVES FOR PLUMBING AND HYDRONICS

This diagram is for illustration purposes only

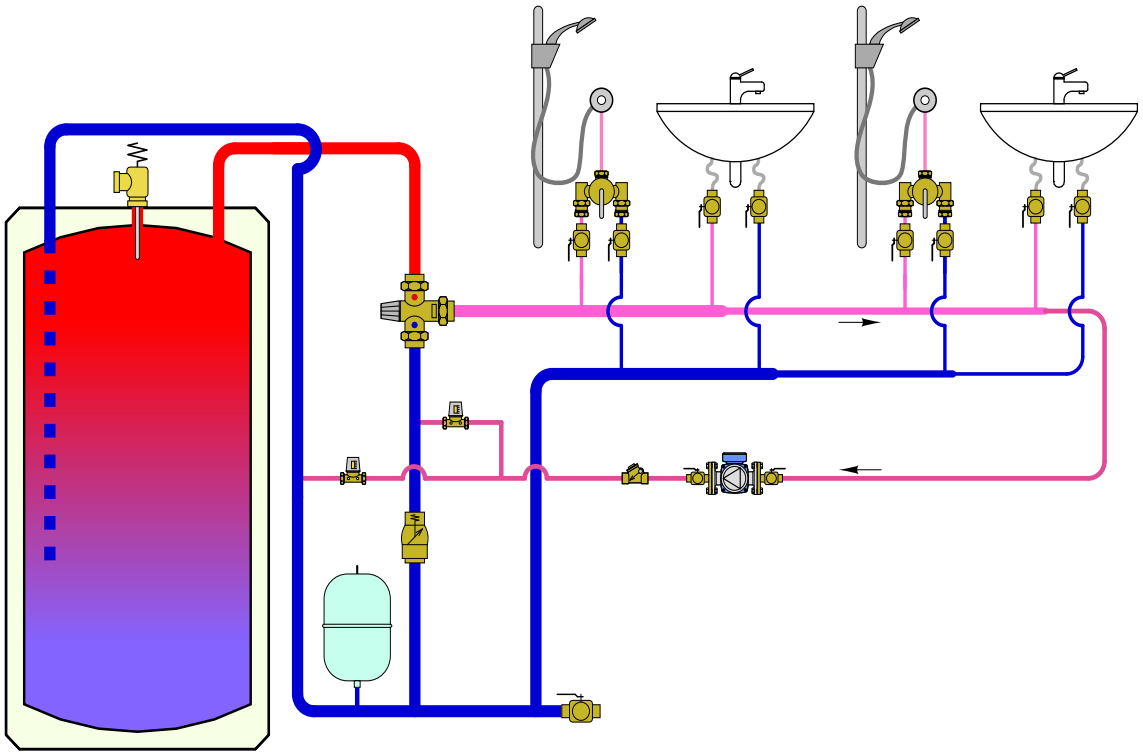

PRODUCTS INCLUDED IN SECTION

- Thermostatic mixing valves for plumbing and hydronics
- High flow thermostatic mixing valves for plumbing and hydronics
- Scald protection thermostatic mixing valves for plumbing
- Mixing valves for centralized hydronic systems
- Electronic mixing valve for plumbing
- High/low thermostatic mixing valve for plumbing
- Thermostatic mixing valve kit for domestic water heaters

THERMOSTATIC MIXING VALVES FOR PLUMBING AND HYDRONICS

521 MixCal™

Adjustable thermostatic mixing valve for point of distribution in domestic water systems and radiant hydronic heating systems.
Low-lead brass body.
Locking set point knob.
Max. working pressure: 200 psi.
Max. inlet temperature: 200ºF.
Adjustable range: 85—150ºF.
Min. flow for optimum performance: 1.0 gpm.

ASSE 1017

Code	Description	Cv	Lbs	USD
521409A	½" sweat union	3	2.4	**275.00**
521409AC	½" sweat union, check valves	3	2.4	**304.00**
521400A	½" NPT male union	3	2.4	**288.00**
521400AC	½" NPT male union, check valves	3	2.4	**316.00**
521406A	½" Press union	3	2.4	**293.00**
521407A	½" PEX crimp union	3	2.4	**275.00**
521407AC	½" PEX crimp union, check valves	3	2.9	**304.00**
521408A	½" PEX expansion union NEW	3	2.4	**275.00**
521408AC	½" PEX expansion union, check valves NEW	3	2.9	**304.00**
521509A	¾" sweat union	3	2.4	**287.00**
521509AC	¾" sweat union, check valves	3	2.4	**329.00**
521500A	¾" NPT male union	3	2.4	**301.00**
521500AC	¾" NPT male union, check valves	3	2.4	**341.00**
521506A	¾" Press union	3	2.4	**301.00**
521506AC	¾" Press union, check valves	3	2.5	**371.00**
521507A	¾" PEX crimp union	3	2.4	**287.00**
521507AC	¾" PEX crimp union, check valves	3	2.9	**329.00**
521508A	¾" PEX expansion union NEW	3	2.4	**287.00**
521508AC	¾" PEX expansion union, check valves NEW	3	2.9	**329.00**
521609A	1" sweat union	3	2.4	**342.00**
521609AC	1" sweat union, check valves	3	2.4	**384.00**
521600A	1" NPT male union	3	2.4	**357.00**
521600AC	1" NPT male union, check valves	3	2.4	**397.00**
521606A	1" Press union	3	2.6	**363.00**
521607A	1" PEX crimp union	3	2.4	**342.00**
521607AC	1" PEX crimp union, check valves	3	2.9	**384.00**
521608A	1" PEX expansion union NEW	3	2.4	**342.00**
521608AC	1" PEX expansion union, check valves NEW	3	2.9	**384.00**

521 MixCal™ with gauge

Adjustable thermostatic mixing valve for point of distribution in domestic water systems and radiant hydronic heating systems.
Low-lead brass body.
Locking set point knob.
Max. working pressure: 200 psi.
Max. inlet temperature: 200ºF.
Adjustable range: 85—150ºF.
Min. flow for optimum performance: 1.0 gpm.
Optional Gauge scale: 30—210ºF.

ASSE 1017

Code	Description	Cv	Lbs	USD
521419A	½" sweat union	3	2.9	**327.00**
521419AC	½" sweat union, check valves	3	2.9	**355.00**
521410A	½" NPT male union	3	2.9	**339.00**
521410AC	½" NPT male union, check valves	3	2.9	**367.00**
521416A	½" Press union	3	2.9	**344.00**
521417A	½" PEX crimp union	3	2.5	**327.00**
521417AC	½" PEX crimp union, checks	3	2.9	**355.00**
521418A	½" PEX expansion union NEW	3	2.5	**327.00**
521418AC	½" PEX expansion union, checks NEW	3	2.9	**355.00**
521519A	¾" sweat union	3	2.9	**339.00**
521519AC	¾" sweat union, check valves	3	2.9	**380.00**
521510A	¾" NPT male union	3	2.9	**352.00**
521510AC	¾" NPT male union, check valves	3	2.9	**393.00**
521516A	¾" Press union	3	2.9	**353.00**
521516AC	¾" Press union checks	3	3	**422.00**
521517A	¾" PEX crimp union	3	2.5	**339.00**
521517AC	¾" PEX crimp union, checks	3	2.9	**380.00**
521518A	¾" PEX expansion union NEW	3	2.5	**339.00**
521518AC	¾" PEX expansion union, checks NEW	3	2.9	**380.00**
521619A	1" sweat union	3	2.9	**394.00**
521619AC	1" sweat union, check valves	3	2.9	**435.00**
521610A	1" NPT male union	3	2.9	**408.00**
521610AC	1" NPT male union, check valves	3	2.9	**449.00**
521616A	1" Press union	3	3.1	**415.00**
521617A	1" PEX crimp union	3	2.5	**394.00**
521617AC	1" PEX crimp union, checks	3	2.9	**435.00**
521618A	1" PEX expansion union NEW	3	2.5	**394.00**
521618AC	1" PEX expansion union, checks NEW	3	2.9	**435.00**

Meets requirements of ANSI/NSF 372-2011. Certified to ASSE 1017, CSA B125.3, UPC, IPC, Low Lead Laws and listed by ICC-ES for use in accordance with the U.S. and Canadian plumbing codes.

ACCESSORIES

Replacement check valves for 521 and 5213.

Code	Description	Lbs	USD
NA10405	Repl. check for 521 PEX, press fittings	0.1	**3.30**
R39204	Repl. check for 521 sweat, NPT fittings	0.1	**4.70**
NA10479	Replacement check for 521333A	0.1	**3.10**

Conical inlet filter for 521 and 5213 mixing valves.

Code	Description	Lbs	USD
F52429	Conical filter	0.1	**5.50**

THERMOSTATIC MIXING VALVES FOR PLUMBING AND HYDRONICS

Point of distribution mixed temperature gauge adaptor fits 1" male union thread mixing valves.
Removable gauge fits into pocket well.
Gauge scale: 30—210ºF.
Gauge accuracy: ± 6ºF.
Gauge dial: 2" diameter.
Certified: Low-lead brass.

Code	Description	Lbs	USD
NA10328	½" sweat with gauge	0.4	**81.70**
NA10056	¾" sweat with gauge	0.4	**89.90**
NA10058	1" sweat with gauge	0.4	**98.70**
NA10358	1" union thread with gauge	0.4	**51.30**
688003A	Replacement gauge with pocket well	0.5	**55.80**
R39591	Replacement gauge	0.1	**36.40**
NA10498	Pocket well, plated NEW	0.1	**5.50**

520 AngleMix™ with gauge

Adjustment temperature range: 95ºF — 150ºF.
Max. working pressure (static): 150 psi.
Max. working pressure (dynamic): 75 psi.
Max. inlet temperature: 195°F.
Gauge scale: 30—210ºF.
Minimum flow for optimum performance: 0.5 GPM (0 GPM with recirculation).

ASSE 1017

Code	Description	Cv	Lbs	USD
520516A	¾" angle, press union	2	2.8	**353.00**
520516AC	¾" angle, press union, checks	2	2.8	**422.00**
520519A	¾" angle, sweat union	2	2.8	**339.00**
520519AC	¾" angle, sweat union, checks	2	2.8	**380.00**

Meets requirements of ANSI/NSF 372-2011. Certified to ASSE 1017, CSA B125.3, UPC, IPC, Low Lead Laws and listed by ICC-ES for use in accordance with the U.S. and Canadian plumbing codes.

Construction details

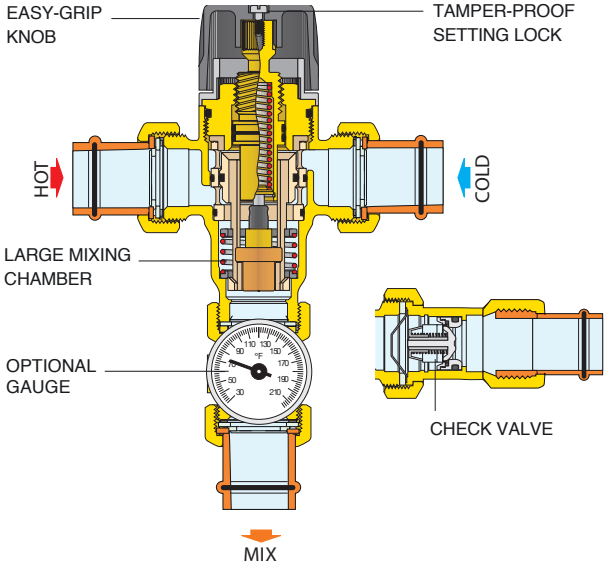

Construction details

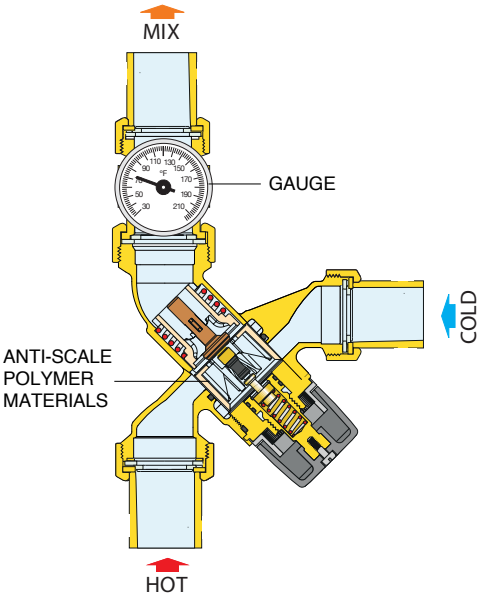

521 MixCal™ Body

Replacement body.
See fitting selection table in Section 8.

ASSE 1017

Code	Description	Cv	Lbs	USD
521101A	1" male union thread	3	1.9	**213.00**

520 AngleMix™ Body

Replacement body.
See fitting selection table in Section 8.

ASSE 1017

Code	Description	Cv	Lbs	USD
520051A	1" male union thread	2	2.0	**213.00.**

HIGH FLOW THERMOSTATIC MIXING VALVES FOR PLUMBING AND HYDRONICS

Model 5231 series high flow thermostatic mixing valves for centralized systems are designed to be installed at the domestic water heater (point of distribution). For safety reasons, it is advisable to limit the maximum mixed water temperature to 120°F (when anti-scald valves are not installed at point-of-use). 5231 series thermostatic mixing valves can also be used for regulating the flow temperature in radiant panel heating systems, to which it assures a constant and accurate control with ease of installation. Meets requirements of ANSI/NSF 372-2011. Certified to ASSE 1017, CSA B125.3, UPC, IPC, Low Lead Laws and listed by ICC-ES for use in accordance with the U.S. and Canadian plumbing codes.

5231 MixCal+™

Adjustable thermostatic mixing valve for domestic water systems and radiant hydronic systems.
DZR low lead brass body.
Max. working pressure: 200 psi.
Max. inlet temperature: 195ºF.
Adjustable range: 95—150ºF.

ASSE 1017

Code	Description	Min Flow (gpm)	Cv	Lbs	USD
523168A	1" sweat union	4.4	7	7	**1,556.00**
523160A	1" NPT male union	4.4	7	7	**1,571.00**
523166A	1" press union	4.4	7	7	**1,655.00**
523178A	1¼" sweat union	4.4	7.6	7	**1,625.00**
523176A	1¼" press union	4.4	7.6	7	**1,730.00**
523170A	1¼" NPT male union	4.4	7.6	7	**1,700.00**
523188A	1½" sweat union	8.8	13	17	**2,444.00**
523186A	1½" press union	8.8	13	17	**2,663.00**
523180A	1½" NPT male union	8.8	13	17	**2,504.00**
523198A	2" sweat union	8.8	14.2	18	**2,570.00**
523196A	2" press union	8.8	14.2	18	**2,960.00**
523190A	2" NPT male union	8.8	14.2	18	**2,636.00**

5231 MixCal+™ Body Sweat

Replacement body.
Male union thread.
See fitting selection table in Section 8.

ASSE 1017

Code	Description	Min Flow (gpm)	Cv	Lbs	USD
523179A	For 1" and 1-¼" sizes	4.4	7.6	5.0	**1,400.00**
523199A	For 1½" and 2" sizes	8.8	14.2	14.2	**2,000.00**

5231 MixCal+™ Sweat

Adjustable thermostatic mixing valve for domestic water systems and radiant hydronic systems.
DZR low lead brass body.
Max. working pressure: 200 psi.
Max. inlet temperature: 195ºF.
Adjustable range: 95—150ºF.
Gauge scale: 30—210ºF.
Gauge accuracy: ± 6ºF.
Gauge dial: 2" diameter.

ASSE 1017

Code	Description	Min Flow (gpm)	Cv	Lbs	USD
523177A	1¼" sweat union	4.4	7.6	9.0	**1,748.00**

Point of distribution mixed temperature gauge adaptor fits High Flow 5231 series mixing valves.
Removable gauge fits into pocket well.
Gauge scale: 30—210ºF.
Gauge accuracy: ± 6ºF.
Gauge dial: 2" diameter.
Certified: Low-lead brass.

Code	Description	Lbs	USD
NA10315	1¼" sweat	0.5	**198.00**
NA10476	1" and 1¼" male x female union	3.0	**225.00**
NA10461	1½" and 2" male x female union	4.0	**391.00**
688003A	Replacement gauge with pocket well	0.2	**55.80**
R39591	Replacement gauge	0.1	**36.40**

Inlet check valve assembly for installing on inlet union tail pieces of 5231 mixing valves. Stainless steel body. No Lead. Ordered separately, field installed. Assembly examples shown below.

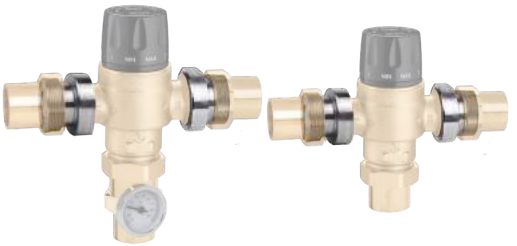

523177A shown with (2) NA10366 523178A shown with (2) NA10366

Code	Description	Lbs	USD
NA10366	Check valve assembly 1" and 1¼"	1.0	**87.30**
NA10367	Check valve assembly 1½" & 2"	1.5	**215.00**

SCALD PROTECTION THERMOSTATIC MIXING VALVES FOR PLUMBING

5213 Scald Protection Point-of-Use

Adjustable thermostatic mixing valve for point of use where protected from scalding caused by hot water with locking set point. Complete with check valves on both hot and cold inlets.
Low-lead brass body.
Max. working pressure: 150 psi.
Max. inlet temperature: 185ºF.
Adjustable range: 85—120ºF.
Temperature control: ±3°F.
Min. flow for optimum performance: 0.5 gpm.

ASSE 1070

Code	Description		Cv	Lbs	USD
521347A	½" PEX crimp union		2	2	**287.00**
521348A	½" PEX expansion union	NEW	2	2	**287.00**
521342A	½" NPT male union		2	2	**301.00**
521349A	½" sweat union		2	2	**287.00**
521357A	¾" PEX crimp union		2	2	**301.00**
521358A	¾" PEX expansion union	NEW	2	2	**301.00**
521352A	¾" NPT male union		2	2	**313.00**
521359A	¾" sweat union		2	2	**301.00**
521367A	1" PEX crimp union		2	2	**359.00**
521368A	1" PEX expansion union	NEW	2	2	**359.00**
521362A	1" NPT male union		2	2	**372.00**
521369A	1" sweat union		2	2	**359.00**
521301A*	Replacement body, no fittings	NEW	2	1.5	**198.00**

*See fitting selection table in Section 8.

5213 Scald Protection Point-of-Use

Adjustable thermostatic mixing valve for point of use where protected from scalding caused by hot water with locking set point. Complete with check valves on both hot and cold inlets.
Low-lead brass body.
Max. working pressure: 150 psi.
Max. inlet temperature: 185ºF.
Adjustable range: 85—120ºF.
Temperature control: ±3°F.
Min. flow for optimum performance: 0.5 gpm.

ASSE 1070

Code	Description	Cv	Lbs	USD
521333A	3/8" compression union	2	2	**244.00**

Construction details

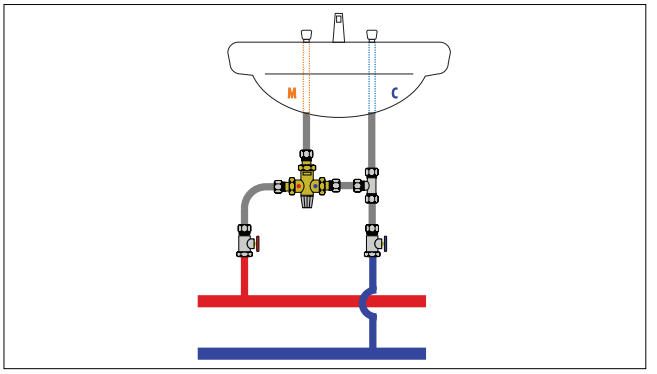

Meets requirements of ANSI/NSF 372-2011. Certified to ASSE 1070, CSA B125.3, UPC, IPC, Low Lead Laws and listed by ICC-ES for use in accordance with the U.S. and Canadian plumbing codes.

MIXING VALVES FOR CENTRALIZED HYDRONIC SYSTEMS

NA164 3-way - 24 V AC motorized 3-wire control temperature mixing valve

Motorized mixing valve for hydronic systems or in radiant panel heating systems. Operates on a control signal from a separately-sourced outdoor reset controller. High flow rate. No swings due to sudden changes in thermal load.
Installation flexibility with reversible cold inlet port and straight through flow direction from hot inlet to mixed outlet.
Brass body.
Max. working pressure: 200 psi.
Temperature range: 40—210ºF.

Code	Description	Cv	Lbs	USD
NA16469	1" sweat unions, floating	7.7	5.8	**1,153.00**
F19149	Replacement actuator 3-wire floating		1.8	**466.00**

NA163 3-way fixed temperature mixing valve

Adjustable thermostatic mixing valve for boiler protection and low temperature mixing. Installation flexibility with reversible cold inlet port and straight through flow direction from hot inlet to mixed outlet.
Brass body.
Max. working pressure: 200 psi.
Max. inlet temperature: 185ºF.
Adjustable range: 80—130ºF.

Code	Description	Cv	Lbs	USD
NA16369	1" sweat unions	3.9	4.8	**909.00**

ELECTRONIC MIXING VALVE FOR PLUMBING

Code	Description		Cv	Lbs	USD
600064A	1" NPT male union		21	7.3	**4,171.00**
600069A	1" sweat union		21	7.3	**4,156.00**
600066A	1" press union	NEW	21	7.3	**4,255.00**
600074A	1-1/4" NPT male union		24	8.2	**4,300.00**
600079A	1¼" sweat union		24	8.2	**4,225.00**
600076A	1¼" press union	NEW	24	8.2	**4,330.00**
600084A	1½" NPT male union		34	21	**4,854.00**
600089A	1½" sweat union		34	21	**4,794.00**
600086A	1½" press union	NEW	34	21	**5,013.00**
600094A	2" NPT male union		48	22	**4,986.00**
600099A	2" sweat union		48	22	**4,920.00**
600096A	2" press union	NEW	48	22	**5,310.00**

Function

The electronic mixing valve is used in centralized systems that produce and distribute domestic hot water. It maintains the temperature of the domestic hot water delivered to the user when there are variations in the temperature and pressure of the hot and cold water at the inlet or in the draw-off flow rate. The LEGIOMIX® electronic mixing valve provides precise temperature control over very low and very high flow rate demand, minimal pressure drop with a ball valve control element, automatic self-cleaning to prevent scale formation and easy-to-use digital interface with data logging, alarming and status indication. The LEGIOMIX® electronic mixing valve is furnished with a controller with LCD user interface that provides a set of programs for circuit thermal disinfection to kill Legionella and is configurable via keypad, or local or remote computer. Depending on the type of system and habits of the user, temperature levels and operation times can be programmed as desired. In addition, it comes standard with monitoring and remote control connections.

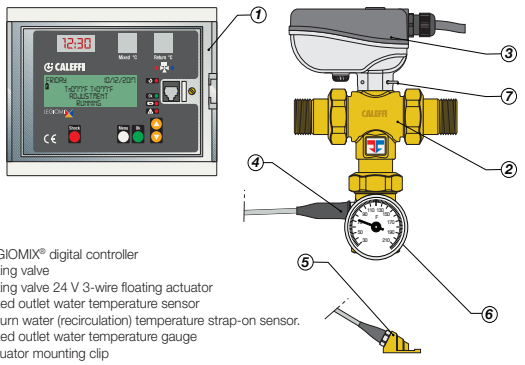

1) LEGIOMIX® digital controller
2) Mixing valve
3) Mixing valve 24 V 3-wire floating actuator
4) Mixed outlet water temperature sensor
5) Return water (recirculation) temperature strap-on sensor.
6) Mixed outlet water temperature gauge
7) Actuator mounting clip

6000 LEGIOMIX®

Electronic mixing valve with optional selectable programs for thermal disinfection of hot water recirculation system to kill Legionella bacteria.
Code number includes:
three-way ball valve
3-wire floating control actuator
controller/user interface with DIN rail mounting bracket
mixed outlet temperature sensor/probe
return temperature sensor/probe
mixed outlet temperature gauge
optional Modbus-to-BACnet gateway for BAS integration

Power: 24 VAC - 50/60 Hz - 6 VA.
Adjustment temperature range: 70 — 185°F.
Disinfection temperature range: 100 — 185°F.
Max. working pressure: 230 psi.
Max. inlet temperature: 212°F.
Protection class: IP 54 (controller).
Meets requirements of ANSI/NSF 372-2011 and certified to ASSE 1017, CSA B15.3, UPC, IPC, Low Lead Laws and listed by ICC-ES for use in accordance with the U.S. and Canadian plumbing codes.

ASSE 1017

Applications diagram

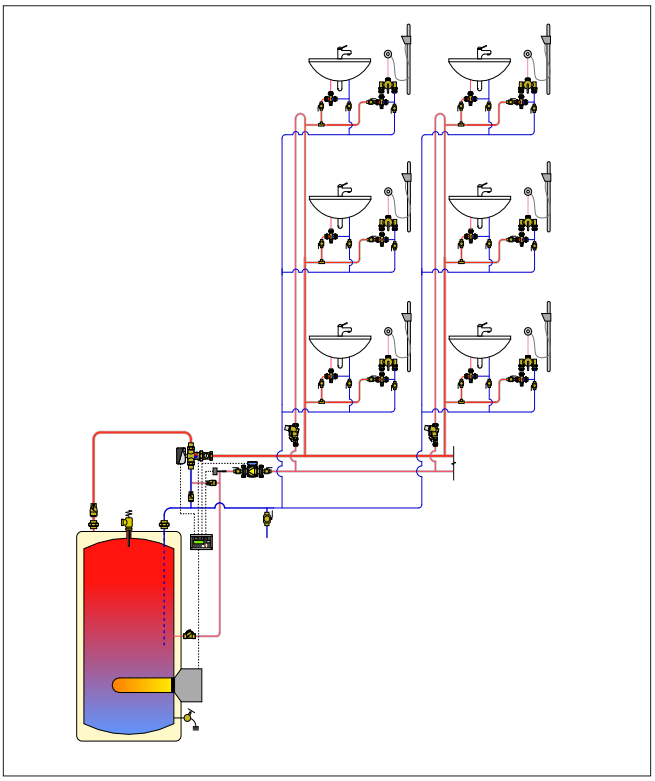

	Recommended Flow Rates (gpm)			
Size	1"	1¼"	1½"	2"
Minimum*	3	4.4	6.6	8.8
Maximum	94	107	152	215
Cv	21	24	34	48

* Minimum flow = 0 GPM when recirculation pump flow rate is > valve minimum GPM rating

ELECTRONIC MIXING VALVE FOR PLUMBING

NEW

6000
LEGIOMIX® Station

Electronic mixing valve with optional selectable programs for thermal disinfection of hot water recirculation system to kill Legionella bacteria, in a packaged wall mount configuration.

Station assembly includes pre-piped 3-way mixing valve with union connections, serviceable check valves, a recirculation connection and isolation valves for fast and simple installation. The LEGIOMIX® controller is pre-mounted and pre-wired and includes a return water temperature sensor. Simply wall mount the assembly, hook up the hot and cold water supplies, mixed outlet, recirculation return water, and provide 24 VAC power to the controller.

ASSE 1017

Code	Description	Cv	Lbs	USD
600066AS	1" copper wall-mount station	21	27.3	**12,680.00**
600076AS	1¼" copper wall-mount station	24	28.2	**14,410.00**
600086AS	1½" copper wall-mount station	34	41	**18,236.00**
600096AS	2" copper wall-mount station	48	42	**20,700.00**

ACCESSORIES AND REPLACEMENT

Inlet check valve assembly for installing on 6000 Series valve body (if required). Stainless steel body. No Lead. Ordered separately, field installed. 2 required per valve.

Code	Description	Lbs	USD
NA10366	Check valve assembly 1" and 1¼"	1.0	**87.30**
NA10367	Check valve assembly 1½" & 2"	1.5	**215.00**

NEW

Replacement actuator.

Code	Description	Lbs	USD
645114	Replacement actuator	1.0	**650.00**

NEW

Replacement controller.

Code	Description	Lbs	USD
F0000962	Replacement controller	1.5	**2,600.00**

NEW

LEGIOMIX® Body

Replacement body.
See fitting selection table in Section 8.

ASSE 1017

Code	Description	Lbs	USD
NA10615	Replacement body (1", 1¼")	1.0	**750.00**
NA10616	Replacement body (1½", 2")	1.5	**1,100.00**

Modbus-to-BACnet gateway
Converts LEGIOMIX® controller Modbus (RS-485 serial) output communication to BACnet IP or MSTP communication.

Code	Description	Lbs	USD
NA10520	Modbus-to-BACnet gateway	1.2	**2,900.00**

HIGH/LOW THERMOSTATIC MIXING VALVE FOR PLUMBING

Code	Description	Lbs	USD
NA52367HL	1" sweat inlets, 1¼" sweat outlet, copper	25	**4,455.00**
NA10512	Ball valve stems extension kit	0.9	**173.00**

NA523 DELTA 2™

Adjustable thermostatic high low mixing valve for point of distribution in domestic water systems.
Low-lead brass valve bodies.
Locking set point knobs on thermostatic mixing valves.
Check valves on thermostatic mixing valve cold inlets.
Locking set point knob on pressure reducing valve.
Copper connecting tubing, all sweat construction.
Double union connection on all valves for ease of service.
Removable ½" NPT threaded outlet thermometer.
Pre-mounted to strut for easy mounting.

Max. working pressure: 200 psi.
Max. inlet temperature: 180ºF.
Adjustable range: 95—150ºF.
Flow range: 1 to 50 gpm.

Thermostatic mixing valves meet requirements of ANSI/NSF 372-2011 and certified to ASSE 1017, CSA B125.3, UPC, IPC, Low Lead Laws and listed by ICC-ES for use in accordance with the U.S. and Canadian plumbing codes. Pressure reducing valve is certified to ASSE 1003, CSA B356, NSF61, NSF 372 Low Lead Laws and listed by ICC-ES. Meets codes IPC, IRC & UPC for use in accordance with the U.S. and Canadian plumbing codes.

Function

The NA523 two-stage high low mixing valve system delivers tempered water for a wide range of flows in a single assembly, applicable for institutional and commercial applications such as hotels, nursing homes, hospitals, schools, and so on. The NA523 is furnished assembled and pressure tested with large and small mixing valves along with a pressure reducing valve, to function as one system in providing a broad flow range from 1 gpm to 50 gpm. This one-piece assembly also contains an outlet thermometer, cold water inlet check valves, and shut-off ball valves. The mixing valves are piped in parallel to the hot and cold inlet lines and the pressure reducing valve is piped on the outlet (mixed temperature) side of the larger thermostatic mixing valve. When demand is low, the small thermostatic mixing valve provides the needed water flow. When demand increases, indicated by increasing Delta P (differential pressure) in the system, the pressure reducing valve sees this fall off pressure, and opens to allow flow through the larger thermostatic mixing valve.

Application Diagram

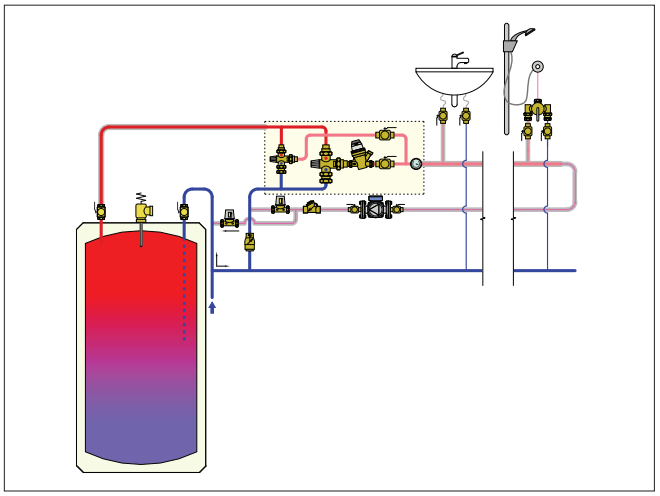

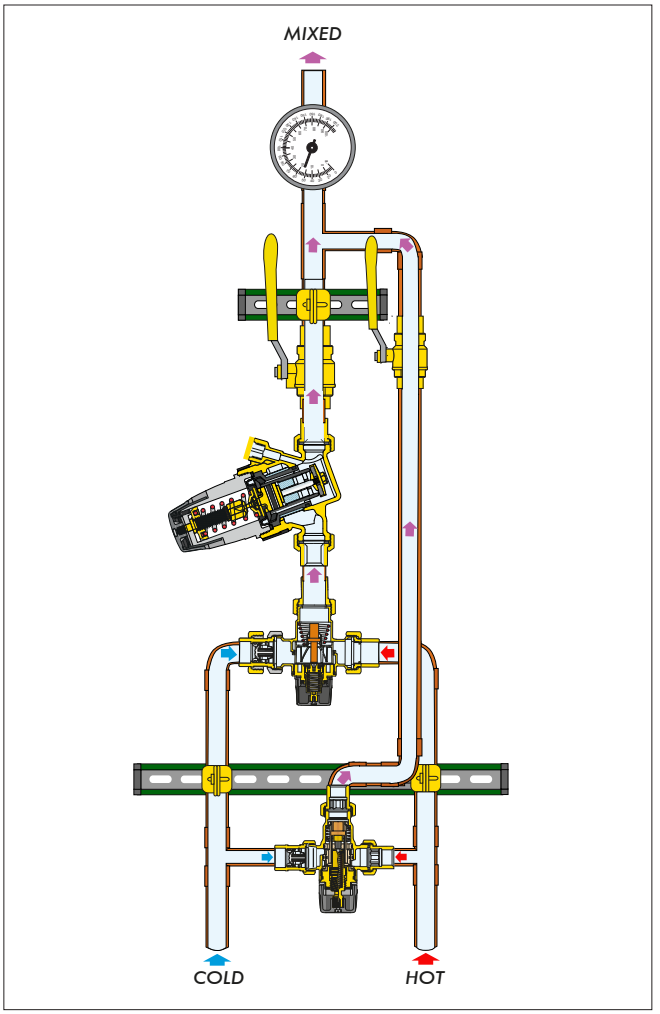

THERMOSTATIC MIXING VALVE KIT FOR DOMESTIC WATER HEATERS

520 TankMixer™

Adjustment temperature range: 95ºF - 150ºF.
Max. working pressure (static): 150 psi.
Max. working pressure (dynamic): 75 psi.
Max. inlet temperature: 195°F.
Minimum flow for optimum performance: 0.5 GPM (0 GPM with recirculation).
Tank: ¾" NPT female union connections.
System: ¾" NPT M, press or sweat union connections.

ASSE 1017

Code	Description	Cv	Lbs	USD
520500AX	¾" NPT male union system connections	2	2.4	**394.00**
520506AX	¾" press union system connections	2	2.4	**451.00**
520509AX	¾" sweat union system connections	2	2.4	**382.00**

520 TankMixer™

Adjustment temperature range: 95ºF - 150ºF.
Max. working pressure (static): 150 psi.
Max. working pressure (dynamic): 75 psi.
Max. inlet temperature: 195°F.
Gauge scale: 30—210ºF.
Gauge accuracy: ± 6ºF.
Gauge dial: 2" diameter.
Minimum flow for optimum performance: 0.5 GPM (0 GPM with recirculation).
Tank: ¾" NPT female union connections.
System: ¾" NPT M, press or sweat union connections.

ASSE 1017

Code	Description	Cv	Lbs	USD
520510AX	¾" NPT male union system connections	2	2.9	**451.00**
520516AX	¾" press union system connections	2	2.9	**506.00**
520519AX	¾" sweat union system connections	2	2.9	**437.00**

Meets requirements of ANSI/NSF 372-2011. Certified to ASSE 1017, CSA B125.3, UPC, IPC, Low Lead Laws and listed by ICC-ES for use in accordance with the U.S. and Canadian plumbing codes.

520 TankMixer™ Body

Replacement body.
See fitting section table in Section 8.

ASSE 1017

Code	Description	Cv	Lbs	USD
520051A	1" male union connection	2	2.0	**213.00**

Construction details

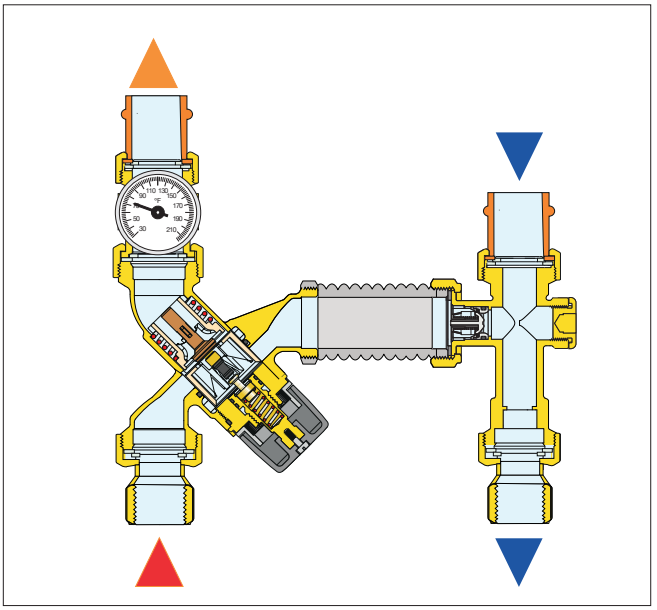

Application diagram

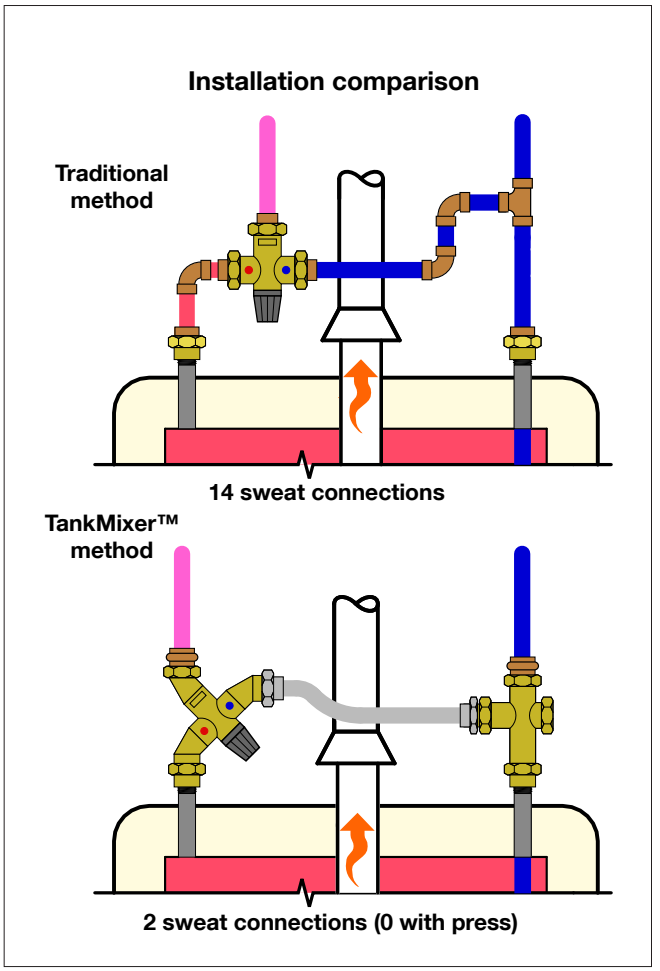

BALANCING VALVES FOR PLUMBING AND HYDRONICS

This diagram is for illustration purposes only

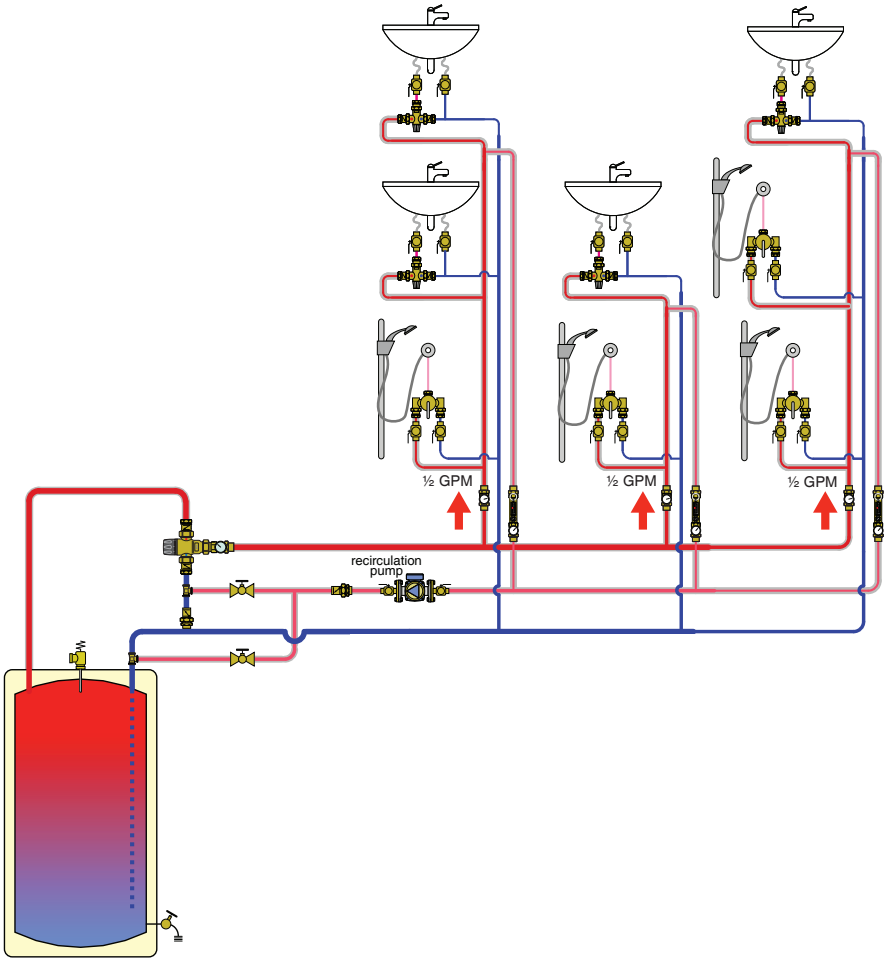

PRODUCTS INCLUDED IN SECTION

- Static balancing valves with flowmeter for plumbing
- Static balancing valves with flowmeter for hydronics
- Dynamic balancing valves for plumbing and hydronics
- Thermal balancing valves for plumbing
- Y-strainer with ball valves for hydronics
- Static balancing valves, fixed orifice, for plumbing and hydronics
- Static balancing valves, variable orifice, for plumbing and hydronics

STATIC BALANCING VALVES WITH FLOWMETER FOR PLUMBING

132 QuickSetter+™

Balancing valve with flow meter.
Direct reading of flow rate.
No sight gauge clouding or scaling.
DZR low-lead brass.
Stainless steel flow rate adjuster.
Inlet flow check valve.
Graduated scale flow meter with magnetic movement flow rate indicator.
2" diameter temperature gauge, optional.
Gauge scale: 30 – 210°F.
Gauge accuracy: ± 6°F.
Meets requirements of ANSI/NSF 372-2011.
Certified to Low Lead Laws and listed by ICC-ES for use in accordance with the U.S. and Canadian plumbing codes.

Without temperature gauge:

Code	Description	Flow scale (gpm)	Lbs	USD
132434AFC	½" PEX crimp union	0.5—1.75	1.8	**365.00**
132432AFC	½" PEX expansion union NEW	0.5—1.75	1.8	**365.00**
132439AFC	½" sweat union	0.5—1.75	2.0	**365.00**
132534AFC	¾" PEX crimp union	0.5—1.75	2.0	**380.00**
132532AFC	¾" PEX expansion union NEW	0.5—1.75	2.0	**380.00**
132536AFC	¾" press union	0.5—1.75	1.8	**404.00**
132539AFC	¾" sweat union	0.5—1.75	1.8	**380.00**
132634AFC	1" PEX crimp union	0.5—1.75	2.2	**439.00**
132632AFC	1" PEX expansion union NEW	0.5—1.75	2.2	**439.00**
132639AFC	1" sweat union	0.5—1.75	2.4	**418.00**
132454AFC	½" PEX crimp union	2.0—7.0	1.8	**365.00**
132452AFC	½" PEX expansion union NEW	2.0—7.0	1.8	**365.00**
132459AFC	½" sweat union	2.0—7.0	2.0	**365.00**
132554AFC	¾" PEX crimp union	2.0—7.0	2.0	**380.00**
132552AFC	¾" PEX expansion union NEW	2.0—7.0	2.0	**380.00**
132556AFC	¾" press union	2.0—7.0	1.8	**404.00**
132559AFC	¾" sweat union	2.0—7.0	1.8	**380.00**
132654AFC	1" PEX crimp union	2.0—7.0	2.2	**439.00**
132652AFC	1" PEX expansion union NEW	2.0—7.0	2.2	**439.00**
132659AFC	1" sweat union	2.0—7.0	2.4	**418.00**

Balancing made fast, easy, and accurate with QuickSetter+™

Features include:
- Three connection sizes: ½", ¾" and 1" sweat unions.
- Two flow range options: 0.5—1.75 gpm scale or 2—7 gpm scale.
- Stainless steel flow adjuster.
- Memory flow indicator.
- Built-in flow check valve.
- Temperature gauge (optional).

Connection size	Flow rate (gpm)	Fully open Cv
1/2"	0.5 - 1.75	1.0
3/4"	0.5 - 1.75	1.0
1"	0.5 - 1.75	1.0
1/2"	2.0 - 7.0	6.3
3/4"	2.0 - 7.0	6.3
1"	2.0 - 7.0	6.3

With temperature gauge:

Code	Description	Flow scale (gpm)	Lbs	USD
132435AFC	½" PEX crimp union	0.5—1.75	2.2	**417.00**
132433AFC	½" PEX expansion union NEW	0.5—1.75	2.2	**417.00**
132438AFC	½" sweat union	0.5—1.75	2.4	**457.00**
132537AFC	¾" press union	0.5—1.75	2.2	**417.00**
132535AFC	¾" PEX crimp union	0.5—1.75	2.4	**433.00**
132533AFC	¾" PEX expansion union NEW	0.5—1.75	2.4	**433.00**
132538AFC	¾" sweat union	0.5—1.75	2.2	**433.00**
132635AFC	1" PEX crimp union	0.5—1.75	2.6	**492.00**
132633AFC	1" PEX expansion union NEW	0.5—1.75	2.6	**492.00**
132638AFC	1" sweat union	0.5—1.75	2.8	**470.00**
132455AFC	½" PEX crimp union	2.0—7.0	2.2	**417.00**
132453AFC	½" PEX expansion union NEW	2.0—7.0	2.2	**417.00**
132458AFC	½" sweat union	2.0—7.0	2.4	**417.00**
132555AFC	¾" PEX crimp union	2.0—7.0	2.4	**433.00**
132553AFC	¾" PEX expansion union NEW	2.0—7.0	2.4	**433.00**
132557AFC	¾" press union	2.0—7.0	2.2	**457.00**
132558AFC	¾" sweat union	2.0—7.0	2.2	**433.00**
132655AFC	1" PEX crimp union	2.0—7.0	2.6	**492.00**
132653AFC	1" PEX expansion union NEW	2.0—7.0	2.6	**492.00**
132658AFC	1" sweat union	2.0—7.0	2.8	**470.00**
F19346	Replacement by-pass valve stem*		0.1	**58.40**

*with operating ring

ACCESSORIES

NEW

Replacement body.
See fitting section table in Section 8.

Code	Description	Lbs	USD
132637	0.5 - 1.75 GPM	1	**289.00**
132657	2.0 - 7.0 GPM	1	**304.00**

NEW

QuickSetter™ Insulation sleeve for valve and fitting on each end.

Code	Description	Lbs	USD
F0000926	For models with temperature gauge	0.1	**58.20**
112001	For models without temperature gauge	0.1	**57.60**

NEW

Replacement flow meter.

Code	Description	Lbs	USD
F0000940	0.5 to 1.75 GPM	0.2	**160.00**
F0000941	2.0 to 7.0 GPM	0.2	**160.00**

STATIC BALANCING VALVES WITH FLOWMETER FOR HYDRONICS

132 QuickSetter™

Balancing valve with flow meter.
Direct reading of flow rate.
No sight gauge clouding or scaling.
Brass valve body and flow meter.
Rotatable valve for flow rate adjustment.
With insulation.
Max. working pressure: 150 psi.
Temperature range: 14—230°F.
Max. percentage of glycol: 50%.

Code	Description	Flow scale (gpm)	Lbs	USD
132432A	½" FNPT	0.5—1.75	2.0	**289.00**
132552A	¾" FNPT	2.0—7.0	1.8	**311.00**
132662A	1" FNPT	3.0—10.0	2.4	**363.00**
132772A	1¼" FNPT	5.0—19.0	2.8	**482.00**
132882A	1½" FNPT	8.0—32.0	3.4	**571.00**
132992A	2" FNPT	12.0—50.0	4.4	**700.00**
F19346	Replacement by-pass valve stem*		0.1	**58.40**

*with operating ring

132 QuickSetter™

Balancing valve with flow meter.
Direct reading of flow rate.
ANSI 125 flanged cast iron body.
Brass flow meter.
Max. working pressure: 150 psi.
Temperature range: 14—230°F.
Max. percentage of glycol: 50%.

Code	Description	Flow scale (gpm)	Lbs	USD
132060A	2½" ANSI flange	30—105	35	**1,728.00**
132080A	3" ANSI flange	38—148	62	**2,305.00**
132100A	4" ANSI flange	55—210	67	**3,519.00**

NEW

Replacement flow meter.

Code	Description	Lbs	USD
F0000940	0.5 to 1.75 GPM	0.2	**160.00**
F0000941	2.0 to 7.0 GPM	0.2	**160.00**
F0000942	3.0 to 10 GPM	0.2	**160.00**
F0000943	5.0 to 19 GPM	0.2	**168.00**
F0000944	8.0 to 32 GPM	0.2	**168.00**
F0000945	12 to 50 GPM	0.2	**168.00**
F0000946	30 to 105 GPM	0.2	**177.00**
F0000947	38 to 148 GPM	0.2	**177.00**
F0000948	55 to 210 GPM	0.2	**177.00**

Flow rate adjustment

The flow rate is adjusted as follows:

A. With the aid of the flow rate indicator (1), mark the desired flow rate.

B. Use the operating ring (2) to open the by-pass valve slowly. This allows fluid to flow through the flow meter (3). The bypass valve is automatically closed under normal operating conditions.

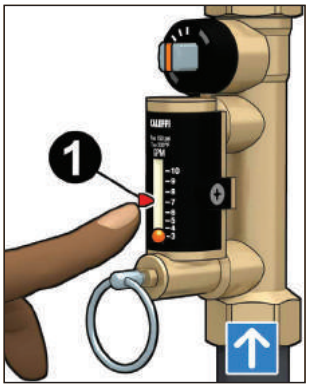

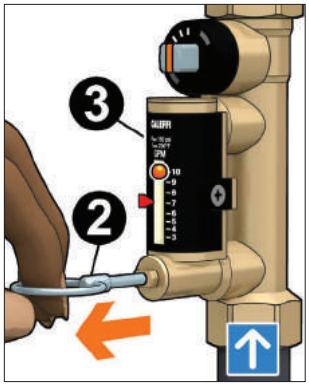

C. While holding the bypass valve open, use a wrench to turn the valve control stem (4) to adjust the flow rate slowly. The resulting flow rate is indicated by the metal ball (5) that slides up and down inside a transparent channel (6) marked by a graduated scale in gpm.

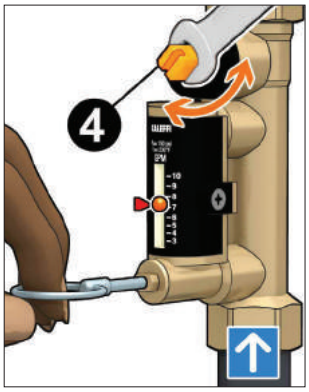

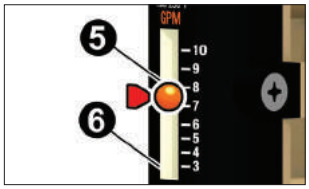

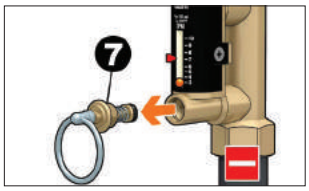

D. Once the flow rate is properly adjusted, release the operating ring (2) of the by-pass valve. The valve will automatically return to the closed position by means of an internal spring.

E. A replacement by-pass valve stem (7) with operating ring is available in event it is damaged and inoperable. Order code F19346.

Complete opening and closing of the valve

Full opening of the valve

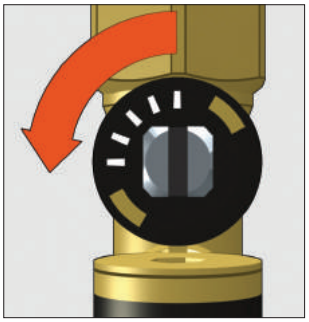

Full closing of the valve

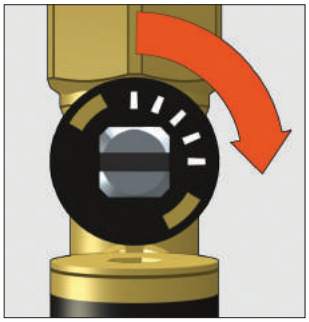

DYNAMIC BALANCING VALVES FOR PLUMBING AND HYDRONICS

127 FlowCal+™

Compact automatic flow balancing valve.
Patented anti-scale, low noise polymer FlowCal™ cartridge.
Inlet flow check valve.
Max. working pressure: 230 psi
Temperature range: 32—212°F.
Max. percentage of glycol: 50%
Flow rate range 0.35 to 10 GPM.
Flow accuracy: ± 10%.

Code	Description		Lbs	USD
127141AFC ***	½" NPT male union		1	**156.00**
127146AFC ***	½" press union		1	**166.00**
127144AFC ***	½" PEX crimp union		1	**154.00**
127142AFC ***	½" PEX expansion union	NEW	1	**154.00**
127149AFC ***	½" sweat union		0.8	**154.00**
127151AFC ***	¾" NPT male union		1	**166.00**
127156AFC ***	¾" press union		1	**192.00**
127154AFC ***	¾" PEX crimp union		1	**168.00**
127152AFC ***	¾" PEX expansion union	NEW	1	**168.00**
127159AFC ***	¾" sweat union		0.8	**168.00**
127161AFC ***	1" NPT male union		1.2	**208.00**
127166AFC ***	1" press union		1.3	**218.00**
127164AFC ***	1" PEX crimp union		1.3	**206.00**
127162AFC ***	1" PEX expansion union	NEW	1.3	**206.00**
127169AFC ***	1" sweat union		1	**206.00**

127 FlowCal™

Compact automatic flow balancing valve.
Patented anti-scale, low noise polymer
Max. working pressure: 230 psi
Temperature range: 32—212°F.
Max. percentage of glycol: 50%
Flow rate range 0.35 to 10 GPM.
Flow accuracy: ±10%.

Code	Description		Lbs	USD
127341AF ***	½" NPT male union		1	**149.00**
127346AF ***	½" press union		1	**164.00**
127342AF ***	½" PEX expansion union	NEW	1	**141.00**
127349AF ***	½" sweat union		0.8	**141.00**
127351AF ***	¾" NPT male union		1	**155.00**
127356AF ***	¾" press union		1	**180.00**
127352AF ***	¾" PEX expansion union	NEW	1	**148.00**
127359AF ***	¾" sweat union		0.8	**148.00**
127361AF ***	1" NPT male union		1.2	**178.00**
127366AF ***	1" press union		1.3	**223.00**
127362AF ***	1" PEX expansion union	NEW	1.3	**170.00**
127369AF ***	1" sweat union		1	**170.00**

Select desired flow rate to complete full part number.
No restrictions.

127 FlowCal+™

Compact automatic flow balancing valve.
Patented anti-scale, low noise polymer FlowCal™ cartridge.
Inlet flow check valve.
Max. working pressure: 230 psi.
Temperature range: 32—212°F.
Max. percentage of glycol: 50%
Flow rate range 0.35 to 10 GPM.
Flow accuracy: ±10%.
2" gauge diameter temperature.
Gauge scale: 30— 210°F
Gauge accuracy: ± 6°F

Code	Description		Lbs	USD
127140AFC ***	½" NPT male union		1	**208.00**
127147AFC ***	½" press union		1	**218.00**
127145AFC ***	½" PEX crimp union		1	**205.00**
127143AFC ***	½" PEX expansion union	NEW	1	**205.00**
127148AFC ***	½" sweat union		0.8	**205.00**
127150AFC ***	¾" NPT male union		1	**250.00**
127157AFC ***	¾" press union		1	**243.00**
127155AFC ***	¾" PEX crimp union		1	**220.00**
127153AFC ***	¾" PEX expansion union	NEW	1	**220.00**
127158AFC ***	¾" sweat union		0.8	**220.00**
127160AFC ***	1" NPT male union		1.2	**260.00**
127167AFC ***	1" press union		1.3	**270.00**
127165AFC ***	1" PEX crimp union		1.3	**257.00**
127163AFC ***	1" PEX expansion union	NEW	1.3	**257.00**
127168AFC ***	1" sweat union		1	**257.00**

Select desired flow rate to complete full part number.
No restrictions.

GPM	Last 3 digits ...	Differential Pressure Control Ranges (psid)
.35	G35	2—14
.5	G50	
.75	G75	
1	1G0	2—32
1.3	1G3	
1.5	1G5	
1.7	1G7	
2	2G0	
2.2	2G2	
2.5	2G5	
2.6	2G6	
3	3G0	
3.5	3G5	
4	4G0	
4.5	4G5	
5	5G0	
6	6G0	4—34
7	7G0	
8	8G0	
9	9G0	5—35
10	10G	

Meets requirements of ANSI/NSF 372-2011. Certified to Low Lead Laws and listed by ICC-ES for use in accordance with the U.S. and Canadian plumbing codes. US Patent 7,246,635 B2.

STATIC BALANCING VALVES, FIXED ORIFICE, FOR PLUMBING AND HYDRONICS

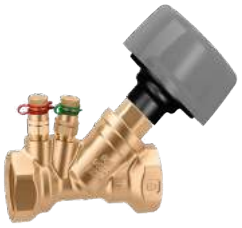

130
Flo-Set™ Fixed Orifice

Fixed orifice.
Multi-turn adjustment range.
Memory stop feature.
Max. working pressure: 232 psi.
Working temperature range: -4 to 250°F.
Number of adjustment turns: 6.
DZR Low-lead brass body.
Stainless steel valve plug.
Teflon® stem guide bearing.
Meets requirements of ANSI/NSF 372-2011.
Certified to Low Lead Laws and listed by ICC-ES for use in accordance with the U.S. and Canadian plumbing codes.

Code	Description	Max Cv	Lbs	USD
130400A	½" NPT female	3.7	1.0	**205.00**
130500A	¾" NPT female	5.1	1.2	**222.00**
130600A	1" NPT female	8.8	1.5	**266.00**
130700A	1¼" NPT female	14.0	2.0	**333.00**
130800A	1½" NPT female	19.7	2.3	**416.00**
130900A	2" NPT female	30.5	2.5	**554.00**

Venturi flow rate measurement device
The 130 series valves are equipped with a flow rate measurement device based on the Venturi effect. The device is incorporated in the body of the valve upstream of the valve plug.

Insulation shell fits 130 series balancing valves.

Code	Description	Lbs	USD
CBN130400	fits ½" NPT	0.1	**45.10**
CBN130500	fits ¾" NPT	0.1	**48.80**
CBN130600	fits 1" NPT	0.1	**58.60**
CBN130700	fits 1¼" NPT	0.1	**73.20**
CBN130800	fits 1½" NPT	0.1	**91.40**
CBN130900	fits 2" NPT	0.1	**122.00**

Operating Principal
The 130 series balancing valve is a hydraulic device that controls the flow rate of a fluid. Turning the knob moves a plug within the fluid stream which varies the flow rate. The flow rate is determined according to the pressure drop value measured by a differential pressure meter connected to the pressure test ports.

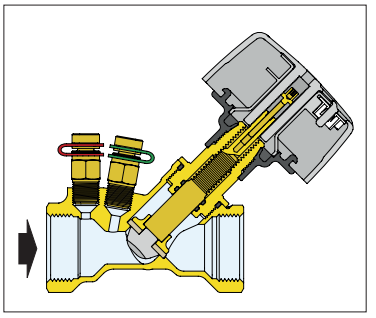

STATIC BALANCING VALVES, VARIABLE ORIFICE, FOR PLUMBING AND HYDRONICS

142
Flo-Set™ Variable Orifice

Memory stop feature
Characterized plug for smooth adjustment.
Maximum working pressure: 232 psi.
Working temperature range: 14—250°F.
DZR low-lead brass body.
Meets requirements of ANSI/NSF 372-2011.
Certified to Low Lead Laws and listed by ICC-ES for use in accordance with the U.S. and Canadian plumbing codes.

Code	Description	Max Cv	Lbs	USD
142241A	½" NPT female	3.4	1.0	**160.00**
142251A	¾" NPT female	5.0	1.2	**171.00**
142261A	1" NPT female	7.5	1.5	**232.00**
142271A	1¼" NPT female	12.9	2.3	**331.00**
142281A	1½" NPT female	16.8	3.0	**371.00**
142291A	2" NPT female	22.0	3.5	**475.00**

Insulation shell fits 142 series balancing valves.

Code	Description	Lbs	USD
CBN142241A	fits ½" NPT	0.1	**41.30**
CBN142251A	fits ¾" NPT	0.1	**43.90**
CBN142261A	fits 1" NPT	0.1	**59.80**
CBN142271A	fits 1¼" NPT	0.1	**85.20**
CBN142281A	fits 1½" NPT	0.1	**95.80**

Operating Principal
The 142 series balancing valve is a hydraulic device that controls the flow rate of a fluid. Turning the knob moves a plug within the fluid stream which varies the flow rate. The flow rate is determined according to the pressure drop value measured by a differential pressure meter connected to the pressure test ports and the adjustment knob position.

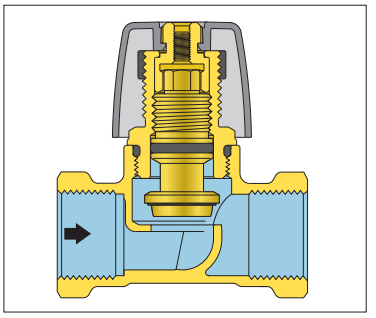

THERMAL BALANCING VALVES FOR PLUMBING

116 ThermoSetter™

Adjustable thermal balancing valve for domestic hot water recirculation circuits.
Drywell for temperature gauge or probe.
DZR low-lead brass body.
Optional check valve.
Optional outlet temperature gauge.
Max. working pressure: 230 psi.
Adjustment temperature range: 95°F —140°F
Cv max: 2.1; Cv min: 0.23;
Cv design: 0.52
Certified to Low Lead Laws and listed by ICC-ES for use in accordance with the U.S. and Canadian plumbing codes.

Code	Description	Lbs	USD
116140A	½" FNPT	1.6	**308.00**
116140AC	½" FNPT, check valve	1.8	**370.00**
116141A	½" FNPT, gauge	1.7	**329.00**
116141AC	½" FNPT, gauge, check valve	1.9	**391.00**
116150A	¾" FNPT	1.5	**331.00**
116150AC	¾" FNPT, check valve	1.7	**404.00**
116151A	¾" FNPT, gauge	1.6	**352.00**
116151AC	¾" FNPT, gauge, check valve	1.8	**424.00**

116 ThermoSetter™

Adjustable thermal balancing valve for domestic hot water recirculation circuits.
With thermal by-pass cartridge for thermal disinfection.
Drywell for temperature gauge or probe.
DZR low-lead brass body.
Optional check valve.
Optional outlet temperature gauge.
Max. working pressure: 230 psi
Adjustment temperature range: 95°F —140°F
Cv max: 2.1; Cv min: 0.23
Cv disinfection: 1.2; Cv design: 0.52
Certified to Low Lead Laws and listed by ICC-ES for use in accordance with the U.S. and Canadian plumbing codes.

Code	Description	Lbs	USD
116240A	½" FNPT, gauge	1.8	**401.00**
116240AC	½" FNPT, gauge, check valve	2	**464.00**
116250A	¾" FNPT, gauge	1.7	**424.00**
116250AC	¾" FNPT, gauge, check valve	1.9	**497.00**

Check valve fits 116 ThermoSetter™.
DZR low-lead brass.
Max. working pressure: 150 psi.
Max. working temperature: 250°F.

Code	Description	Lbs	USD
NA10469	½" FNPT x MNPT inline check valve	0.1	**62.40**
NA10467	¾" FNPT x MNPT inline check valve	0.1	**72.80**

116 ThermoSetter™

Adjustable thermal balancing valve for domestic hot water recirculation circuits.
With by-pass valve for thermal disinfection.
Purchase 656 actuator separately.
Drywell for temperature gauge or probe.
DZR low-lead brass body.
Optional outlet check valve.
Max. working pressure: 230 psi.
Adjustment temperature range: 95°F —140°F
Cv max: 2.1; Cv min: 0.23
Cv disinfection: 1.2; Cv design: 0.52
Certified to Low Lead Laws and listed by ICC-ES for use in accordance with the U.S. and Canadian plumbing codes.

Code	Description	Lbs	USD
116340A*	½" FNPT, gauge	1.8	**422.00**
116340AC*	½" FNPT, gauge, check valve	2.0	**485.00**
116350A*	¾" FNPT, gauge	1.7	**445.00**
116350AC*	¾" FNPT, gauge, check valve	1.9	**518.00**

*Requires separately ordered 656 series actuator.

6563 TwisTop™

TwisTop™ thermo-electric actuator for use with 1163xx Series.
Twist the top to manually open.
Power supply: 24 V AC/DC.
Initial current draw: ≤ 250 mA.
Power consumption: 3 W.
Rating of micro-switch contacts: 5 A (24 V).
31.5" wire lead connection.
US Patent 7,617,989 B2.

Code	Description	Lbs	USD
656344	24 V AC/DC	0.4	**153.00**
656354	24 V AC/DC with micro-switch	0.4	**181.00**

6564

Thermo-electric actuator with micro-switch fits on 676 two-way zone valve bodies.
Low current draw.
Protection class (installed in all positions): NEMA 3 (IP54).
Power supply: 24 V AC/DC.
Initial current draw: ≤250 mA.
Power consumption:
holding: 3 W
inrush: 6 VA
Rating of micro-switch contacts: 5 A (24 V).
31.5" wire lead connection.

CE

Code	Description	Lbs	USD
656404	24 V AC/DC	0.4	**114.00**
656414	24 V AC/DC with micro-switch	0.4	**144.00**

THERMAL BALANCING VALVES FOR PLUMBING

Function
The ThermoSetter™ adjustable thermal balancing valve is used for automatic balancing of recirculation loops in domestic hot water systems, to speed hot water delivery, reduce water waste and save pumping energy. The internal thermostatic balancing cartridge automatically modulates flow to ensure a constant temperature in the recirculation piping system. The 116 series has an adjustment knob with 95°F to 140°F (35°C to 60°C) temperature scale indication. An integral dry-well holds a slide-in temperature gauge for local indication, or a sensor for remote temperature sensing. The optional check valve protects against circuit thermo-syphoning.

Operating mode A - Temperature control (1161xx series)
At the set temperature, the valve plug, controlled by the thermostatic balancing cartridge, gradually closes the outlet. The outlet is never fully closed, always allowing a minimum flow for temperature sensing and to prevent recirculation pump dead-heading. If the temperature decreases, the outlet flow increases, causing flow and thus temperature to increase back to the set temperature. If temperature exceeds the set-point, the plug stays in the minimum closed position.

Thermostatic balancing control

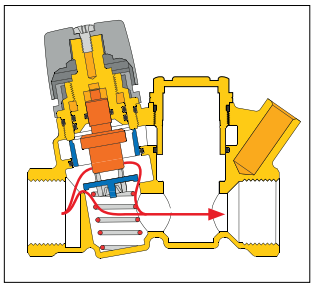

Minimum flow rate

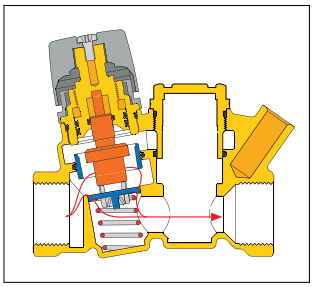

Operating mode B - Automatic thermostatic disinfection (1162xx series)
When a temperature higher than about 155°F (68°C) is reached, a by-pass passage begins to open to activate the second thermostatic cartridge which controls the thermal disinfection process, allowing flow independent of the operation of the thermostatic balancing cartridge. This allows water flow through a special by-pass port, opening the flow path up until the temperature of 160°F (70°C). If the temperature continues rising beyond this point, the flow is reduced through the by-pass port to allow thermal balancing even during the disinfection process. When temperature reaches about 170°F (75°C), the cartridge closes the disinfection by-pass port to protect the system fixtures from the effects of excessive temperatures.

Thermostatic disinfection by-pass

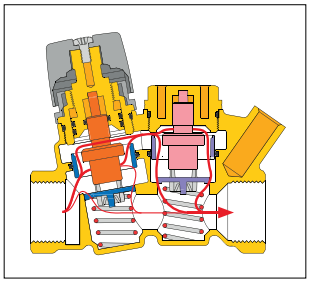

Thermal shut-off

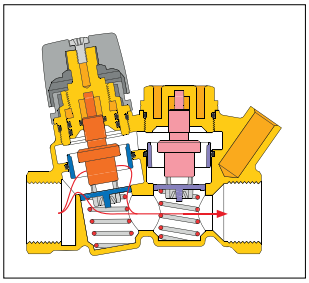

Operating mode C - Actuator-controlled disinfection (1163xx series)
When the disinfection operating temperature setting of the electronic disinfection system is reached, the thermo-electric actuator 656 series (which is controlled by a dedicated electronic control system), is energized to operate the by-pass valve to control the disinfection process, allowing flow independent of the operation of the thermostatic balancing cartridge. In this case, the minimum head loss is produced during this thermal disinfection process.

Electric controlled disinfection by-pass

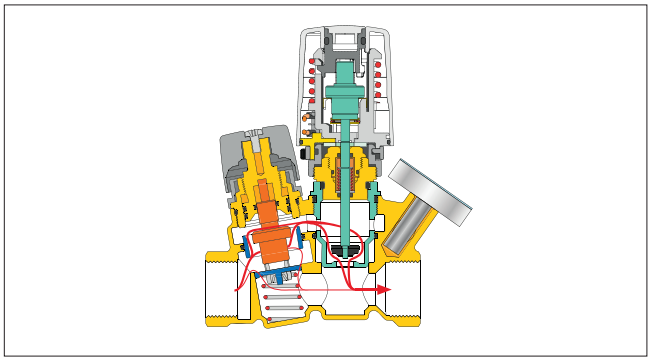

Replacement actuator disinfection cartridge.

Code	Description	Lbs	USD
116000	Replacement actuator bypass cartridge	0.1	**93.60**

Replacement thermal disinfection cartridge.

Code	Description	Lbs	USD
F0000580	Replacement thermal bypass cartridge	0.1	**72.80**

Insulation shell fits 116 series thermal balancing valve.

Code	Description	Lbs	USD
CBN116140	Insulation shell	0.1	**49.90**

Temperature gauge fits 116 series.
Working temperature range: 30°F — 180°F

Code	Description	Lbs	USD
116010	1½" dial temp. gauge	0.1	**20.80**

DYNAMIC BALANCING VALVES FOR HYDRONICS

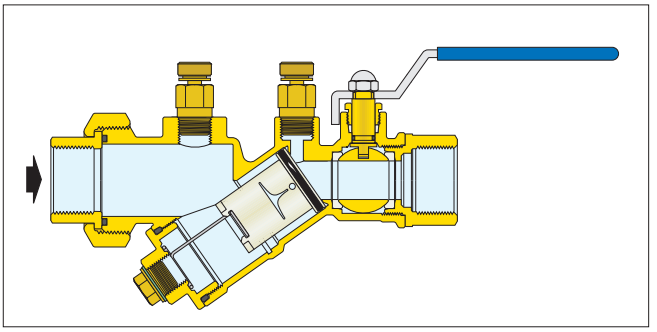

121
FlowCal™

Automatic flow balancing valve with integral ball valve.
Brass body.
Patented anti-scale, low noise polymer FlowCal™ cartridge.
Maximum working pressure: 400 psi (400 WOG).
Working temperature range: 32—212°F (0—100°C).
Max. percentage of glycol: 50%.
Differential pressure control ranges: 2—14, 2—32, 4—34, 5—35 psid.
Flow rate: fixed flow rate settings ranging from 0.35—21 GPM.
Flow accuracy: ±10%.
US Patent 7,246,635 B2.

Available with optional factory-installed pressure and temperature test ports (1213xxx series).

Code	Description	Lbs	USD
121141A ●●●	½" NPT female	2.7	**205.00**
121149A ●●●	½" sweat	2.7	**196.00**
121151A ●●●	¾" NPT female	2.7	**208.00**
121159A ●●●	¾" sweat	2.7	**198.00**
121161A ●●●	1" NPT female	5.0	**423.00**
121169A ●●●	1" sweat	5.0	**404.00**
121171A ●●●	1¼" NPT female	5.0	**475.00**
121179A ●●●	1¼" sweat	5.0	**452.00**
121341A ●●●	½" NPT female with PT test ports	3.2	**220.00**
121349A ●●●	½" sweat with PT test ports	3.2	**210.00**
121351A ●●●	¾" NPT female with PT test ports	3.2	**224.00**
121359A ●●●	¾" sweat with PT test ports	3.2	**212.00**
121361A ●●●	1" NPT female with PT test ports	5.5	**439.00**
121369A ●●●	1" sweat with PT test ports	5.5	**418.00**
121371A ●●●	1¼" NPT female with PT test ports	5.5	**490.00**
121379A ●●●	1¼" sweat with PT test ports	5.5	**467.00**

Select desired flow rate to complete full part number.

Size	GPM	Last 3 digits ...	Differential Pressure Control Ranges (psid)
½", ¾"	0.35	G35	2 — 14
½", ¾"	0.5	G50	
½", ¾"	0.75	G75	
½", ¾"	1	1G0	2 — 32
½", ¾"	1.3	1G3	
½", ¾"	1.5	1G5	
½", ¾"	1.7	1G7	
½", ¾"	2	2G0	
½", ¾"	2.2	2G2	
½", ¾"	2.5	2G5	
½", ¾", 1"	2.6	2G6	
½", ¾", 1"	3	3G0	
½", ¾", 1"	3.5	3G5	
½", ¾", 1", 1¼"	4	4G0	
½", ¾", 1", 1¼"	4.5	4G5	
½", ¾", 1", 1¼"	5	5G0	
½", ¾", 1", 1¼"	6	6G0	4 — 34
½", ¾", 1", 1¼"	7	7G0	
½", ¾", 1", 1¼"	8	8G0	

Replacement flow cartridge kits are available. Consult factory.

Size	GPM	Last 3 digits ...	Differential Pressure Control Ranges (psid)
½", ¾", 1", 1¼"	9	9G0	5 — 35
½", ¾", 1", 1¼"	10	10G	
1", 1¼"	11	11G	3 — 32
1", 1¼"	12	12G	
1", 1¼"	13	13G	
1", 1¼"	14	14G	4 — 35
1", 1¼"	15	15G	
1", 1¼"	16	16G	
1", 1¼"	17	17G	
1", 1¼"	18	18G	
1", 1¼"	19	19G	
1", 1¼"	20	20G	
1", 1¼"	21	21G	

Size	Flow Rates
½"	.35 —10 GPM
¾"	.35 —10 GPM
1"	2.5—21 GPM
1¼"	4—21 GPM

Y-STRAINER WITH BALL VALVE FOR HYDRONICS

120
Y-strainer

Y-strainer with integral ball valve. Brass body. Stainless steel strainer cartridge.
Maximum working pressure: 400 psi (400 WOG).
Working temperature range: 32—212°F.
Max. percentage glycol: 50%.
Strainer (20 mesh).
Connections:—body: F NPT union x F NPT, sweat union x sweat.
Pressure and temperature ports: ¼" NPT.
Drain port connection: ¼" for ½" & ¾" or ½" for 1" & 1¼".

Code	Description	Cv	Lbs	USD
120141A 000	½" NPT female	8.0	3.0	**186.00**
120149A 000	½" sweat	8.0	3.0	**177.00**
120151A 000	¾" NPT female	8.4	3.0	**188.00**
120159A 000	¾" sweat	8.4	3.0	**180.00**
120161A 000	1" NPT female	19	6.0	**372.00**
120169A 000	1" sweat	19	6.0	**355.00**
120171A 000	1¼" NPT female	20	6.0	**423.00**
120179A 000	1¼" sweat	20	6.0	**404.00**
120341A 000	½" NPT female with PT	8.0	3.5	**202.00**
120349A 000	½" sweat with PT	8.0	3.5	**192.00**
120351A 000	¾" NPT female with PT	8.4	3.5	**204.00**
120359A 000	¾" sweat with PT	8.4	3.5	**194.00**
120361A 000	1" NPT female with PT	19	6.5	**388.00**
120369A 000	1" sweat with PT	19	6.5	**369.00**
120371A 000	1¼" NPT female with PT	20	6.5	**439.00**
120379A 000	1¼" sweat with PT	20	6.5	**418.00**

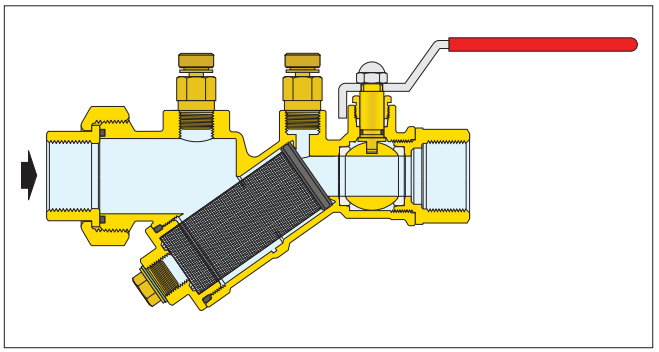

STATIC BALANCING WITH FLOW METER

NA223

Direct in-line balancing / flow meter with brass body for hydronic applications only.
Max percentage of glycol: 50%.
Max working pressure: 150 psi.
Temperature range: 32—250°F.
Measuring accuracy: ±10%.
Cv: 6.0.
See fitting selection table in Section 9.

Code	Description	Lbs	USD
NA223529	2 to 8 gpm with 1" union thread	0.9	**200.00**

Two union nuts, washers and tail pieces.
Low-lead brass.

Code	Description	Lbs	USD
NA12249	½" sweat with 1" union nuts	0.2	**41.00**
NA12259	¾" sweat with 1" union nuts	0.2	**49.20**
NA12269	1" sweat with 1" union nuts	0.3	**85.90**

538

Drain valves for field installation in blow-down-port connection of the 120 series Y-strainer.
Brass body.
With ¾" garden hose connection.
Max. working pressure: 150 psi.
Max: working temperature: 250°F.

Code	Description	Lbs	USD
538202 FD	¼" NPT fits ½—¾" 120 series	0.3	**21.10**
538402 FD	½" NPT fits 1—1¼" 120 series	0.3	**21.50**

100
PT test ports

Fast-plug pressure/temperature test ports fits FlowCal™ automatic flow balancing valves and the 120 series Y-strainer. The double-sealing core insures long and trouble free service.
Low Lead brass body.
Nordel Core.
Connections: ¼" NPT male.
Cap thread: ⅜"-24 UNF
Working temperature range: 0—275°F.
Max. working pressure: 435 psi.
Pair (2 ports included)

Code	Description	Lbs	USD
100001A	Standard size, 1½" length (pair)	0.5	**23.20**

PRVS, BACKFLOW PREVENTERS AND AIR VENTS

This diagram is for illustration purposes only

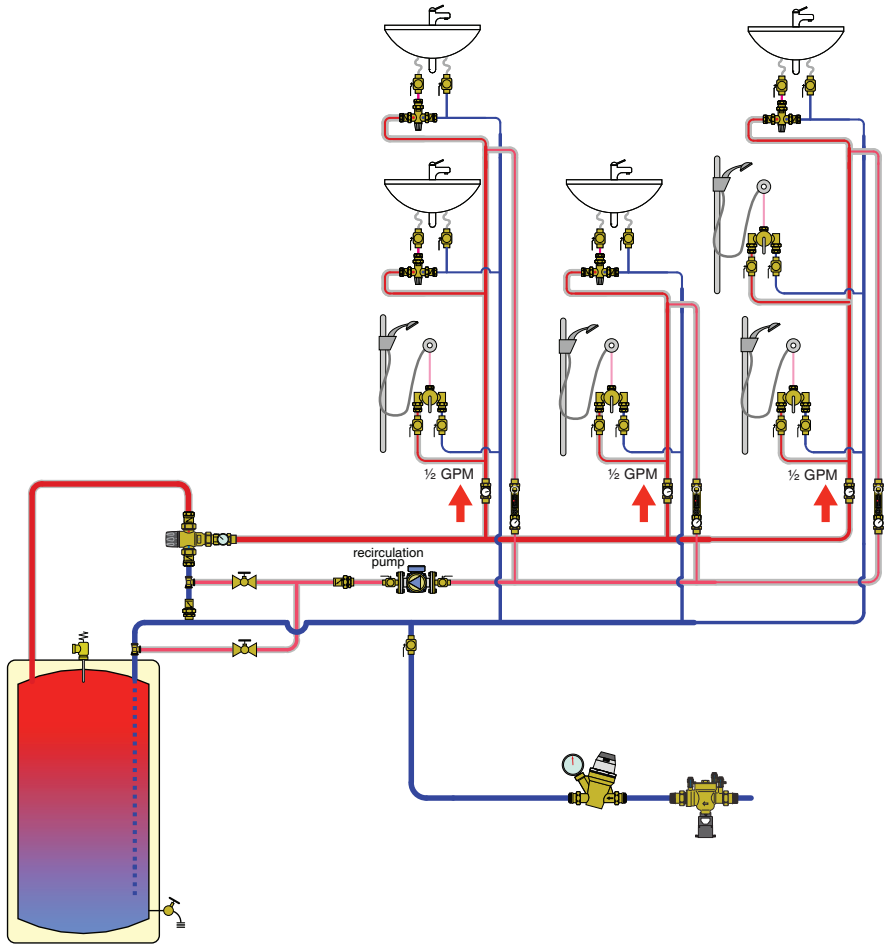

PRODUCTS INCLUDED IN SECTION

- Pressure reducing valves for plumbing
- Backflow preventers, dual check, for plumbing and hydronics
- Backflow preventers, RPZ type, for plumbing and hydronics
- Automatic air vent for plumbing

PRESSURE REDUCING VALVES FOR PLUMBING

535H PresCal™ PRV

Pre-adjustable pressure reducing valve for residential and commercial applications. DZR low lead "Ecobrass" body. Unique noise reducing pressure balanced cartridge. Low friction anti-scale moving parts. High flow seat design. Dial indicator with direct readout. Replaceable cartridge. Integral stainless steel filter. Adjustment locking screw.
Max. working pressure: 300 psi.
Max. working temperature: 180°F.
Pressure setting range: 15 — 90 psi.
Factory setting: 45 psi.
Certified to: ASSE 1003, CSA B356, NSF61, NSF 372, Low Lead Laws and listed by ICC-ES. Meets codes IPC, IRC & UPC for use in accordance with the U.S. and Canadian plumbing codes.

ASSE 1003

Code	Description	GPM	Lbs	USD
535940HA	½" sweat union	7.0	1.9	**177.00**
535941HA	½" sweat union, gauge	7.0	2.0	**197.00**
535340HA	½" NPT female union	7.0	2.0	**193.00**
535341HA	½" NPT female union, gauge	7.0	2.1	**212.00**
535950HA	¾" sweat union	12.3	2.2	**192.00**
535951HA	¾" sweat union, gauge	12.3	2.3	**211.00**
535350HA	¾" NPT female union	12.3	2.3	**208.00**
535351HA	¾" NPT female union, gauge	12.3	2.4	**227.00**
535650HA	¾" press union	12.3	2.3	**201.00**
535651HA	¾" press union, gauge	12.3	2.4	**220.00**
535750HA	¾" PEX crimp union	12.3	2.3	**192.00**
535751HA	¾" PEX crimp union, gauge	12.3	2.4	**211.00**
535550HA	¾" PEX expansion union NEW	12.3	2.3	**192.00**
535551HA	¾" PEX expansion union, gauge NEW	12.3	2.4	**211.00**
535960HA	1" sweat union	19.0	2.9	**255.00**
535961HA	1" sweat union, gauge	19.0	3.0	**274.00**
535360HA	1" NPT female union	19.0	3.0	**271.00**
535361HA	1" NPT female union, gauge	19.0	3.1	**290.00**
535660HA	1" press union	19.0	3.0	**296.00**
535661HA	1" press union, gauge	19.0	3.1	**316.00**
535760HA	1" PEX crimp union	19.0	3.0	**255.00**
535761HA	1" PEX crimp union, gauge	19.0	3.1	**274.00**
535970HA	1¼" sweat union	31.0	5.6	**563.00**
535971HA	1¼" sweat union, gauge	31.0	5.7	**581.00**
535370HA	1¼" NPT female union	31.0	5.7	**577.00**
535371HA	1¼" NPT female union, gauge	31.0	5.8	**596.00**
535980HA	1½" sweat union	42.0	7.3	**788.00**
535981HA	1½" sweat union, gauge	42.0	7.4	**807.00**
535380HA	1½" NPT female union	42.0	7.3	**832.00**
535381HA	1½" NPT female union, gauge	42.0	7.4	**851.00**
535990HA	2" sweat union	64.0	9.7	**1,025.00**
535991HA	2" sweat union, gauge	64.0	9.8	**1,045.00**
535390HA	2" NPT female union	64.0	9.7	**1,021.00**
535391HA	2" NPT female union, gauge	64.0	9.8	**1,041.00**

GPM flowrate at 6 feet per second water velocity.

535H PresCal™ Body

Replacement valve body.
See fitting selection table in Section 8.

ASSE 1003

Code	Description	Lbs	USD
535840HA	½" body	1.9	**135.00**
535850HA	¾" body	2.2	**142.00**
535860HA	1" body	2.9	**187.00**
535870HA	1¼" body	6.1	**411.00**
535880HA	1½" body	7.3	**578.00**
535890HA	2" body	9.7	**672.00**

Construction details

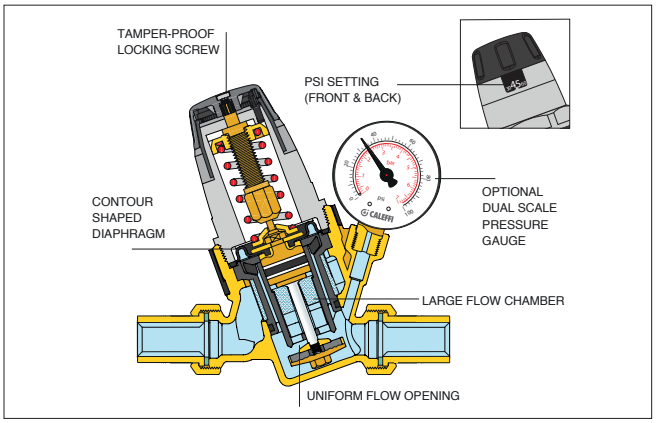

Replacement cartridge for 535H series pressure reducer.

Code	Description	Lbs	USD
535006HA	Fits 535H ½", ¾" , 1"	0.3	**97.60**
535009HA	Fits 535H 1¼", 1½", 2"	0.5	**300.00**

PVC jumper nipple with male union thread. The length of the jumper nipple matches the 535H series valve body face-to-face dimension (B'), allowing the piping to be completed prior to the installation of valve and permitting quick change out from the jumper to the valve.

Code	Description	Lbs	USD
NA11304	Jumper nipple for 535H ½"	0.1	**22.80**
NA11305	Jumper nipple for 535H ¾"	0.1	**25.20**
NA11306	Jumper nipple for 535H 1"	0.2	**27.00**
NA11307	Jumper nipple for 535H 1¼"	0.3	**29.20**
NA11308	Jumper nipple for 535H 1½"	0.3	**31.50**
NA11309	Jumper nipple for 535H 2"	0.5	**91.20**

PRESSURE REDUCING VALVES FOR PLUMBING

533H PresCal™ Compact

Compact pressure reducing valve for residential and light commercial applications. DZR low lead "Ecobrass" body with inlet union connection. Low friction anti-scale moving parts. High flow seat design. Replaceable cartridge. Integral stainless steel filter. Adjustment screw for pressure set point. Tamper-resistant cap included.
Max. working pressure: 250 psi.
Max. working temperature: 180°F.
Pressure setting range: 15 — 90 psi.
Factory setting: 45 psi. Certified to: ASSE 1003, CSA B356, NSF61, NSF 372, Low Lead Laws and listed by ICC-ES. Meets codes IPC, IRC & UPC for use in accordance with the U.S. and Canadian plumbing codes.

ASSE 1003

Code	Description	Lbs	USD
533340HA	½", NPT female union in, FNPT outlet	0.9	**155.00**
533341HA	½", NPT female union in, FNPT out , w/ gauge	1.1	**175.00**
533940HA	½", sweat union in, FNPT outlet	0.9	**141.00**
533941HA	½", sweat union in, FNPT out , w/ gauge	1.1	**161.00**
533350HA	¾", NPT female union in, FNPT outlet	1.1	**166.00**
533351HA	¾", NPT female union in, FNPT out , w/ gauge	1.3	**186.00**
533950HA	¾", sweat union in, FNPT outlet	1.1	**154.00**
533951HA	¾", sweat union in, FNPT out , w/ gauge	1.3	**174.00**
533650HA	¾", press union in, FNPT outlet	1.1	**161.00**
533651HA	¾", press union in, FNPT out , w/ gauge	1.3	**181.00**
533750HA	¾", PEX crimp union in, FNPT outlet	1.1	**154.00**
533751HA	¾", PEX crimp union in, FNPT out , w/ gauge	1.3	**174.00**
533850HA	¾", PEX expan. union in, FNPT outlet	1.1	**154.00**
533851HA	¾", PEX expan. union in, FNPT out , w/ gauge	1.3	**174.00**

Pressure gauge fits 535H and 533H series pressure reducers.
Dial size: 2".
Pressure range: 0—100 psi /0-7 bar.
Connection: ⅛" NPT.

Code	Description	Lbs	USD
NA10273	⅛" NPT male	0.1	**21.20**

533H PresCal™ Body

Replacement valve body.
See fitting selection table in Section 8.

ASSE 1003

Code	Description	Lbs	USD
533449HA*	½" replacement body only	0.7	**120.00**
533459HA*	¾" replacement body only	0.9	**127.00**

Replacement cartridge for 533H series pressure reducer.

Code	Description	Lbs	USD
533000H	Fits 533H 1/2", 3/4"	0.2	**93.80**

Construction diagram

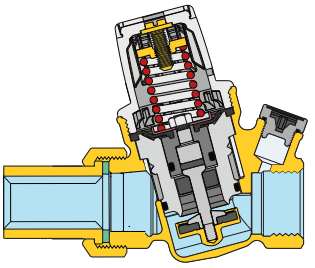

Application diagram (shown with backflow preventer and isolation valves)

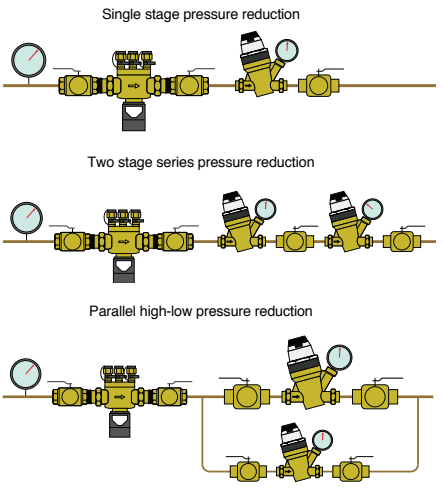

BACKFLOW PREVENTERS, DUAL CHECK, FOR PLUMBING AND HYDRONICS

573
Dual Check Backflow Preventer

Dual check continuous pressure backflow preventer with atmospheric vent.
DZR low Lead brass body.
Max. working pressure: 175 psi.
Working temperature range: 32—250°F.
Emergency backpressure temperature: 250°F
Certified to: ASSE 1012, CSA B64.3, NSF 372, Low Lead Laws and listed by ICC-ES. Meets codes IPC, IRC & UPC for use in accordance with the U.S. and Canadian plumbing codes.

ASSE 1012

Code	Description	Lbs	USD
573403A	½" NPT female unions	1.7	**134.00**
573406A	½" press unions	1.7	**163.00**
573409A	½" sweat unions	1.7	**128.00**
573493A	½" sweat union inlet, ½" FNPT union outlet	1.7	**131.00**
573503A	¾" NPT female unions	1.7	**141.00**
573100A*	Replacement body w/washers NEW	1.5	**98.80**

*See fitting selection table in Section 8

BACKFLOW PREVENTERS, RPZ TYPE, FOR PLUMBING AND HYDRONICS

574
RPZ Backflow Preventer

Testable reduced pressure zone backflow preventer.
DZR low lead brass body.
Max. working pressure: 150 psi.
Max. working temperature: 150°F.

ASSE 1013

574
RPZ Backflow Preventer

Testable reduced pressure zone backflow preventer.
DZR low lead brass body.
Max. working pressure: 150 psi.
Max. working temperature: 150°F.

ASSE 1013

Code	Description	Lbs	USD
574004A	½" FNPT	5.0	**520.00**
574064A	½" press	5.1	**551.00**
59977	Replacement upstream check valve	0.1	**32.30**
59978	Replacement discharge valve assembly	0.2	**57.80**
59979	Replacement downstream check valve	0.1	**37.30**
59980	Replacement discharge air gap	0.1	**14.00**

Code	Description	Lbs	USD
574050A	¾" FNPT	9.5	**624.00**
574056A	¾" press	9.6	**676.00**
59469	Replacement upstream check valve	0.2	**83.20**
59470	Replacement downstream check valve	0.2	**88.10**
59471	Replacement discharge valve assembly	0.3	**175.00**
59472	Replacement valve seat	0.1	**62.30**
39623	Replacement discharge air gap	0.2	**20.70**

Certified to: ASSE 1013, CSA B64.4, NSF372, Low Lead Laws and listed by ICC-ES. Meets codes IPC, IRC & UPC for use in accordance with the U.S. and Canadian plumbing codes.

Construction details

The testable reduced pressure zone backflow preventer is composed of a body with a removable cover, upstream and downstream check valves and relief valve. The two check valves create three separate pressure zones: upstream or inlet zone; intermediate, also known as the reduced pressure zone; and a downstream, or outlet zone. Each has a test port to measure pressure. A relief valve is located in the lower part of the reduced pressure zone. The valve stem of the relief valve is connected to the diaphragm, and is forced upward by the spring. The diaphragm separates the water in the upstream zone of the operation chamber from the water in the reduced pressure zone (RPZ) chamber.

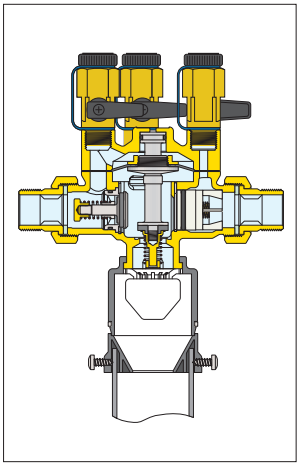

Flow capacity

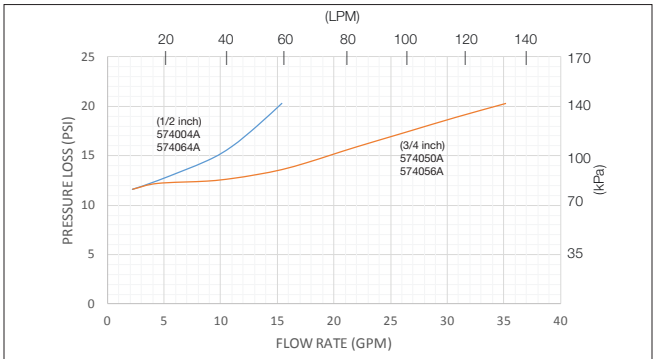

Size	Max. Cv
1/2 inch	3.4
3/4 inch	7.8

AUTOMATIC AIR VENT FOR PLUMBING

NA5026 PLUMBVENT™

Automatic air vent.
Compatible with plumbing systems.
Hygroscopic cap (anti-drip).
Low lead brass body.
Max. working pressure: 150 psi.
Max. discharge pressure: 90 psi.
Max. discharge rate: 1.75 SCFM.
Max working temperature: 240°F.

Code	Description	Lbs	USD
NA502640A	½" MNPT	0.6	**72.80**

Function

Float type automatic air vent designed to vent air from water at high points in plumbing system piping. Example applications include risers, domestic hot water storage tanks and recirculation system pump inlets. The automatic air vent is installed in the vertical position in parts of the system where air has possibility accumulated. It is supplied complete with a safety hygroscopic cap that automatically closes the air discharge in case of contact with water.

Construction Diagram

Operating mechanism
The function of this device is guaranteed by an operating mechanism specially designed to vent when system pressure is high.

Antivibration and antirotation system on the float
This guarantees that in the rest position the air relief valve will not be affected by any movement of the float.

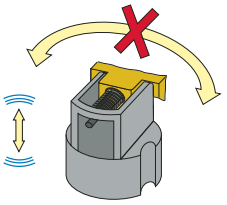

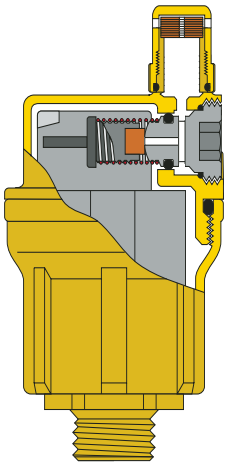

Application Diagrams

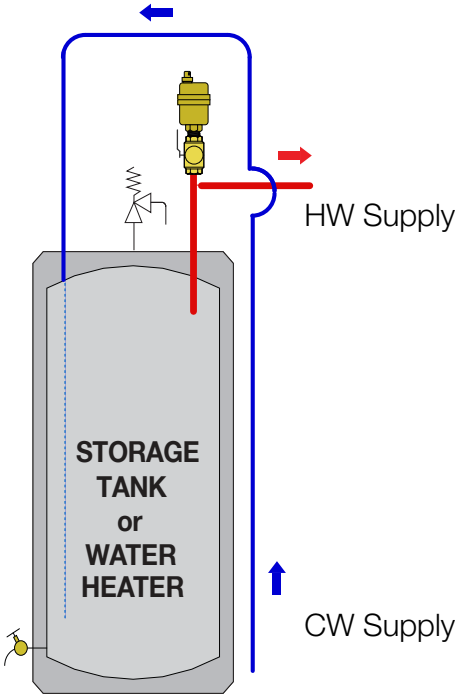

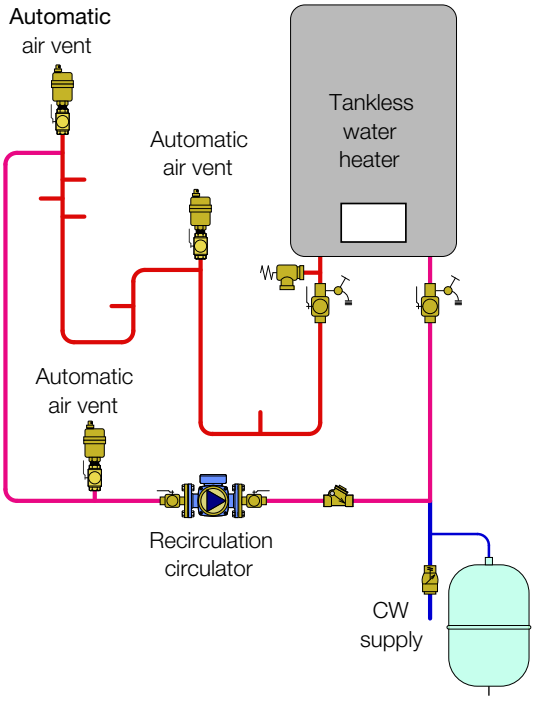

FILLING UNITS AND BOILER TRIM KITS

This diagram is for illustration purposes only

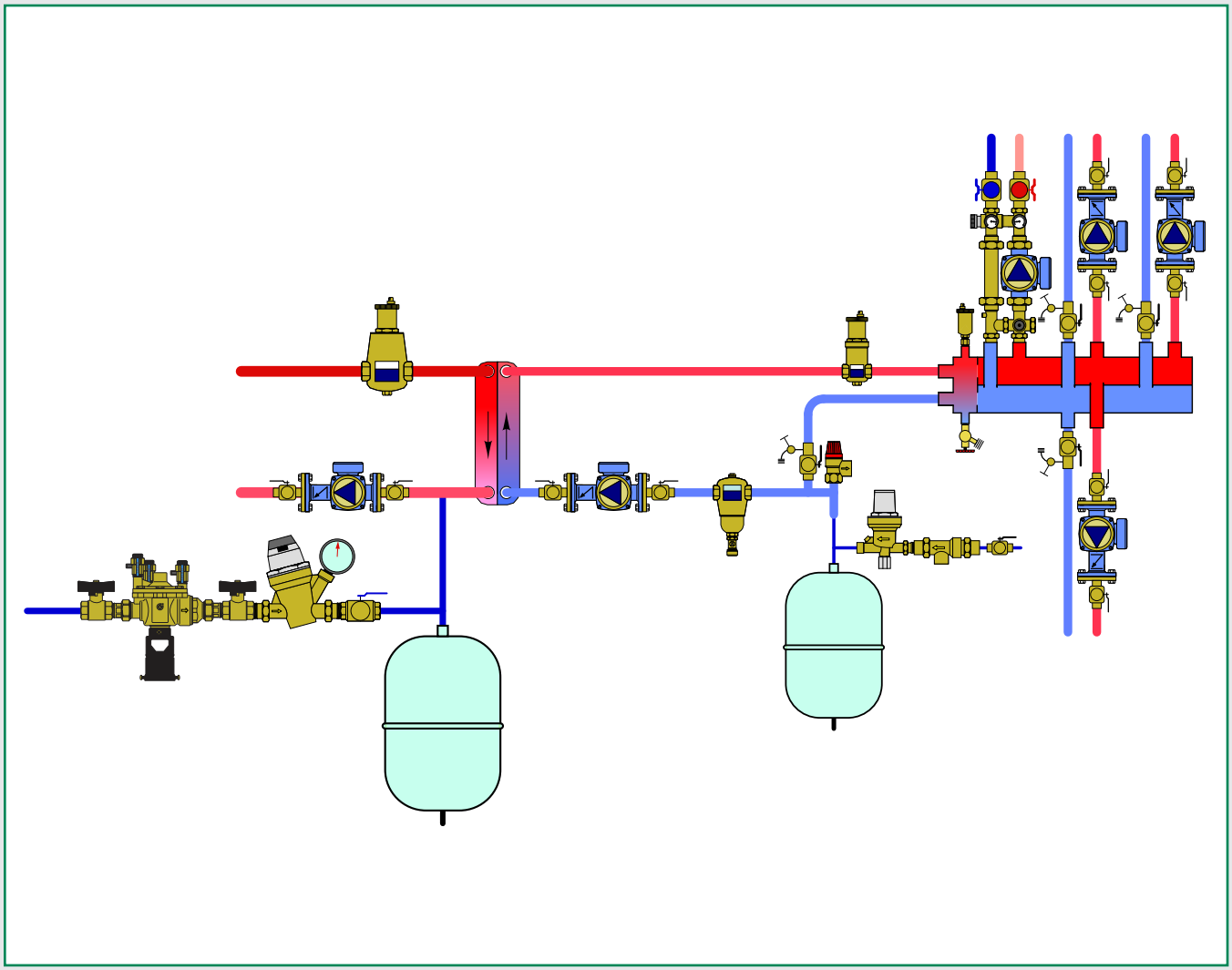

PRODUCTS INCLUDED IN SECTION

- Water treatment filling units
- Fill and flush cart
- Automatic filling units
- Boiler trim kits

WATER TREATMENT FILLING UNITS

NA570 HYDROFILL™

Portable water treatment filling unit, demineralizes site water through a mixed bed resin ion exchange with TDS indicator.
Complete including resin bags.
Composite PPHAGF50 body.
Max. inlet pressure: 120 psi.
Max. working temperature: 100°F.
Max. fill rate NA570912: 6 gpm.
Max. fill rate NA579024: 12 gpm.
TDS of water after treatment: < 30 ppm
Connections: ¾" GHT

Code	Description	Lbs	USD
NA570912	Two resin filter bag unit	44	**3,182.00**
NA570924	Four resin filter bag unit with cart	98	**6,047.00**

Construction details

The large yellow lever enables quick and easy opening of the tank. The lever includes a pressure release valve. In one motion as the lid is turned to the full open position, the tank depressurizes and opens to the full diameter of the tank.

Highly accurate built-in TDS meter 0 - 999 ppm with resolution of 1 ppm due to its advanced microprocessor technology. Auto-Off function conserves battery power. The unit shuts off automatically after 10 minutes of non-use. Replaceable battery with a life of approximately 1000 hours of continuous use.

Pre-packed resin bags save time and simplify resin change process. No more time-consuming, inconvenient filling up of narrow tanks and no more spilled, wasted resin. Resin change process is simple as removing the used bags and inserting new ones. Each bag is made from a water permeable material and contains a pre-proportioned amount of high capacity premium grade virgin mixed bed resin.

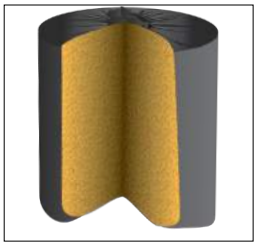

Innovative flow distribution screen design evenly distributes the inlet water through the entire column of resin. Produces up to 30% more treated water from a single resin refill compared to other types of demineralization tanks. Reduced operational cost through less frequent resin replacement. Less waste, less time spent on changing resin.

Replacement twist-on lid.
Includes new TDS monitor.

Code	Description	Lbs	USD
NA57094	Replacement twist-on lid	3	**943.00**

Replacement parts

Code	Description	Lbs	USD
NA57092	Replacement internal inlet/outlet screens	1.5	**86.30**
NA57093	Replacement o-ring seal kit	0.1	**139.00**

Resin bags for HYDROFILL™ in reusable plastic pail.

Code	Description	Lbs	USD
NA570971	Two resin bags for NA570912	22	**694.00**
NA570974	Four resin bags for NA570924	43	**1,387.00**

NA575

Multi-parameter TDS, pH & temperature tester kit complete with carrying case plus pH and conductivity calibration packets.
Range TDS: 0 —999.9 ppm.
Range pH: 0 — 14.
Range temp: 32 — 122°F.

Code	Description	Lbs	USD
NA575002	TDS, pH & temperature tester kit	3.0	**790.00**

NA573

Replenishment water treatment filling unit, demineralizes site water through a color changing (indicates when to change) demineralizing cartridge.
Max. inlet pressure: 125 psi.
Max. working temperature: 100°F.
Max. flow: 1 gpm.
TDS of water after treatment: < 30 ppm

Code	Description	Lbs	USD
NA573022*	½" FNPT	7.4	**573.00**
NA573100**	Replacement filter housing assembly	3.4	**260.00**
NA573102	Replacement color-changing filter	1.0	**133.00**

*Complete including back flow preventer, isolation valves, filter housing with resin cartridge and AutoFill™.
**Filter housing only. Includes color changing demineralizing cartridge.

FILL AND FLUSH CART

NA255 HYDROFLUSH™

The fill and flush pump cart is portable, leak-tested for a safe, quick and clean way to fill and flush solar, geo thermal and hydronic systems.
Medium: water, glycol and cleaning fluids.
Tank: 10 gallon with dirt filter.
Max. tank medium temperature: 140°F.
Pump delivery flow: 1—15 gpm
Pump feet of head: 125 psi.
Max. pump pressure: 55 psi.
Pump power: ½ HP (120 V AC).
Isolating ball valves: ¾" garden hose thread.
Transfer hoses: 8' with ¾" GHT (2 ea).
Dimensions: 48"H × 20"W × 18"D.

Code	Description	Lbs	USD
NA25510	Clean, fill and flush cart	60	**3,858.00**
NA11338	Replacement hose, 3/4" ID, FxF GHT	3.0	**89.40**

Dimensions:

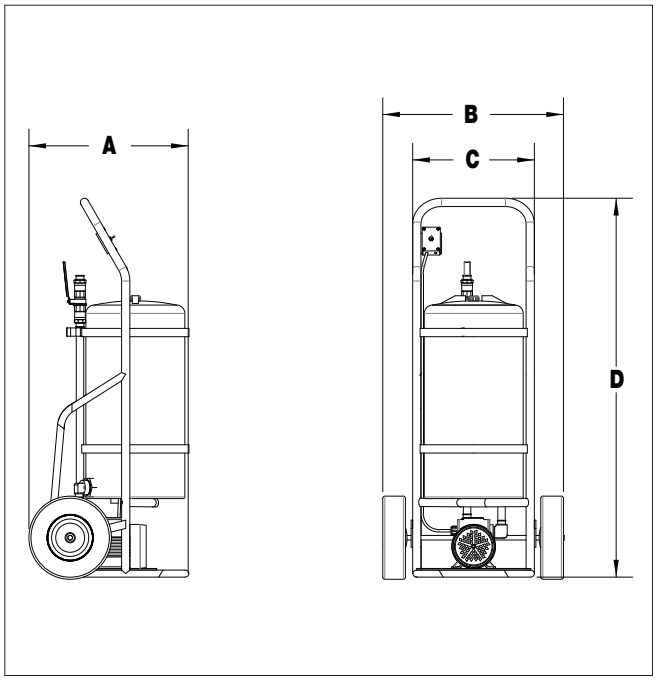

Code	A	B	C	D	Weight	Capacity
NA25510	19 ½"	20 "	14"	46 ¼"	85 lbs.	10 gallon

Function

The fill and flush pump cart is portable and leak-tested for a safe, quick and clean way to fill and flush solar, geothermal and hydronic systems.

Connect the fill/purge valves to the fill and flush system, allow fluid to circulate and remove air and dirt in system.

Radiant

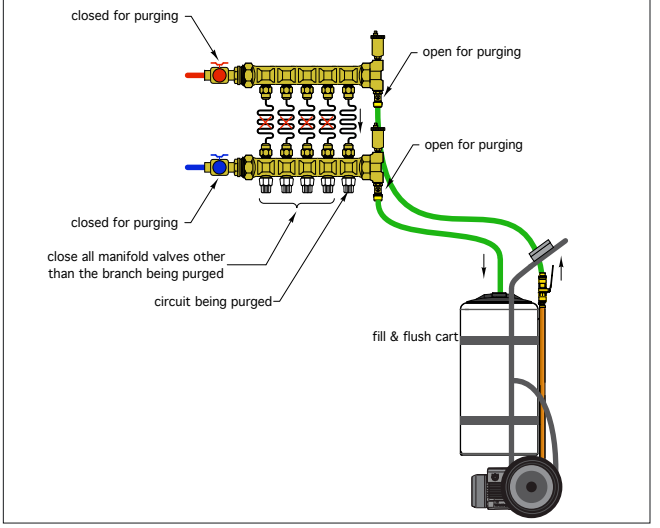

Hydronic

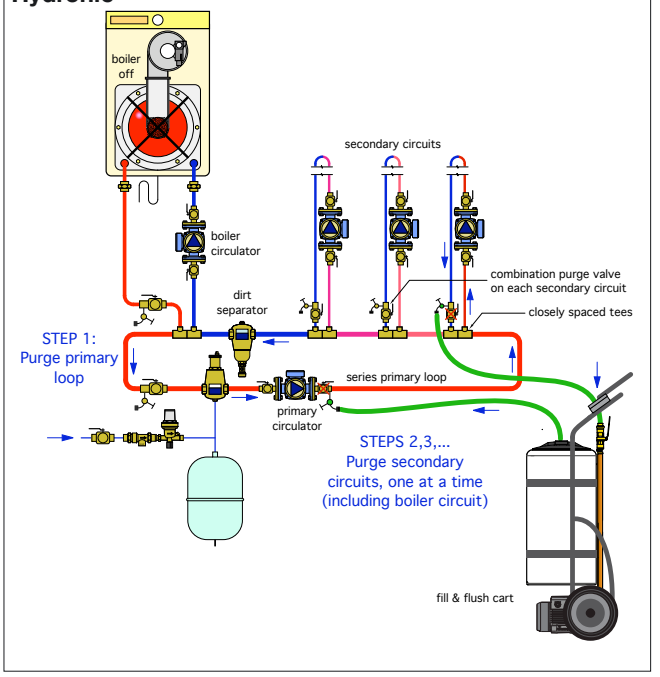

AUTOMATIC FILLING UNITS

553 AutoFill™

Pre-adjustable automatic filling valve, anti-scale, visual system pressure indicator. Complete with manual shut-off valve, strainer and check valve.
Brass body.
Max. inlet pressure: 230 psi.
Max. working temperature: 150°F.
Setting pressure range: 3—60 psi.
Preset outlet pressure: 15 psi.
Pressure gauge scale: 0—60 psi / 0—4 bar.

Code	Description	Lbs	USD
553542A	½" NPT male union in, ½" FNPT out	1.7	**173.00**
553549A	½" sweat union in, ½" FNPT out	1.7	**164.00**
553642A*	½" NPT male union in, ½" FNPT out	1.7	**194.00**
553649A*	½" sweat union in, ½" FNPT out	1.7	**186.00**

*With pressure gauge.

574 AutoFill™ Combo

Pre-adjustable automatic filling valve with testable reduced pressure zone backflow preventer.
Brass body.
Max. working pressure: 150 psi.
Max. working temperature: 150°F.
Setting pressure range: 3—60 psi.
Preset outlet pressure: 15 psi.
Pressure gauge scale: 0—60 psi / 0—4 bar.

ASSE 1013

Code	Description	Lbs	USD
574002A	½" FNPT	9.4	**682.00**
574012A	½" FNPT, gauge	9.4	**703.00**
574006A	½" press	9.4	**713.00**
574016A	½" press, gauge	9.4	**734.00**
574007A	½" press in x FNPT out	9.4	**698.00**
574017A	½" press in x FNPT out, gauge	9.4	**719.00**

Application Diagram

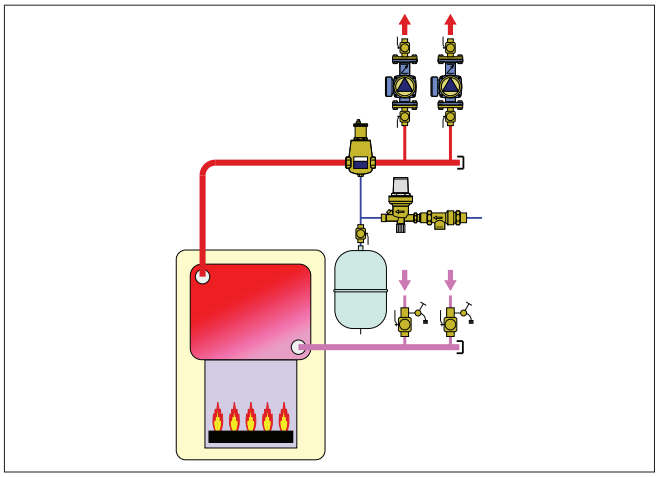

573 AutoFill™ Combo

Pre-adjustable automatic filling valve with backflow preventer.
Brass body.
Max. inlet pressure: 175 psi.
Max. working temperature: 150°F.
Setting pressure range: 3—60 psi.
Preset outlet pressure: 15 psi.
Pressure gauge scale: 0—60 psi / 0—4 bar.

ASSE 1012

Code	Description	Lbs	USD
573002A	½" NPT female union in, ½" FNPT out	5.0	**295.00**
573012A*	½" NPT female union in, ½" FNPT out	5.0	**318.00**
573006A	½" press union in, 1/2" press out	5.0	**328.00**
573016A*	½" press union in, 1/2" press out	5.0	**354.00**
573007A	½" press union in, ½" FNPT out	5.0	**312.00**
573017A*	½" press union in, ½" FNPT out	5.0	**336.00**
573009A	½" sweat union in, ½" FNPT out	5.0	**282.00**
573019A*	½" sweat union in, ½" FNPT out	5.0	**304.00**

*With pressure gauge.

Code	Description	Lbs	USD
NA10363	0-60 psi/0-4 bar, ¼" NPT	0.1	**22.20**

Code	Description	Lbs	USD
F59650	553 AutoFill replacement cartridge	0.2	**51.00**

Code	Description	Lbs	USD
NA10197	AutoFill™ clear plastic disc cover	0.1	**2.30**

Construction

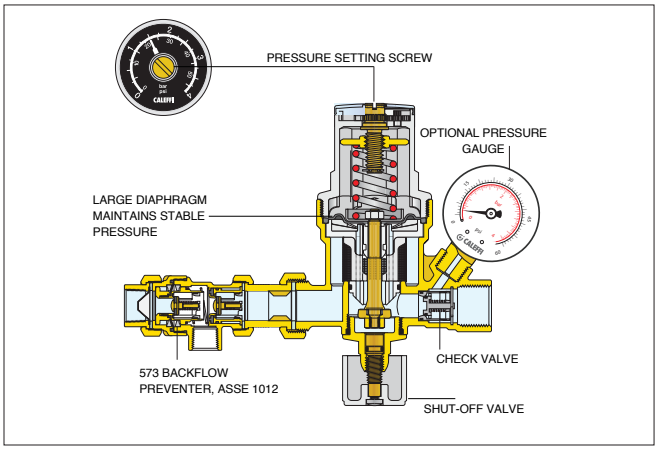

COMMERCIAL AUTOMATIC FILLING UNITS

5350 AutoFill™

Automatic filling valve.
Complete with integral downstream pressure gauge and pressure setting adjustment knob.
Max. working pressure: 365 psi.
Max. working temperature: 140°F.
Pressure gauge scale: 0—100 psi /0—7 bar.
Pressure setting range: 6—90 psi.
Preset outlet pressure: 15 psi.

Code	Description	Lbs	USD
535051A	¾" NPT male union	2.3	**224.00**
535056A	¾" press union	2.3	**230.00**
535057A	¾" PEX crimp union	2.3	**220.00**
535058A	¾" PEX expansion union NEW	2.3	**220.00**
535059A	¾" sweat union	2.3	**220.00**
535061A	1" NPT male union	2.4	**237.00**
535066A	1" press union	2.4	**249.00**
535067A	1" PEX crimp union	2.4	**239.00**
535068A	1" PEX expansion union NEW	2.4	**239.00**
535069A	1" sweat union	2.4	**235.00**

5350 AutoFill™ Body

Automatic filling valve.
Brass body.
Complete with integral downstream pressure gauge and pressure setting adjustment knob.
See fitting selection table in Section 8.

Code	Description	Lbs	USD
535950A	AutoFill™ body, no fittings	2.0	**162.00**

574 AutoFill™ Combo

Pre-adjustable automatic filling valve with testable reduced pressure zone backflow preventer.
Max. working pressure: 140 psi.
Max. working temperature: 140°F.
Pressure gauge scale: 0—100 psi /0—7 bar.
Pressure setting range: 6—90 psi.
Preset outlet pressure: 15 psi.

ASSE 1013

Code	Description	Lbs	USD
574151A	¾" FNPT in, ¾" NPT male union out	9.4	**833.00**
574156A	¾" press	9.4	**885.00**
574157A	¾" press in, ¾" NPT male union out	9.4	**859.00**

NA102

Pressure gauge fits 5350 series AutoFill™.
Dial size: 2".
Pressure range: 0—100 psi /0—7 bar.
Connection: ⅛" NPT.

Code	Description	Lbs	USD
NA10273	0-100 psi/0-7 bar, ⅛" MNPT	0.2	**21.20**

Replacement cartridge for 5350 series AutoFill™.

Code	Description	Lbs	USD
535004	AutoFill™ 5350 series replacement cartridge	0.2	**81.40**

BOILER TRIM KITS

NA553

Boiler Trim Kits.
6 configurations combining 8 boiler installation components in one box.
This kit includes:
- (1) Caleffi DISCAL® air separator
- (1) Backflow preventer: ½" NPT, sweat or press union
- (1) AutoFill™
- (1) Expansion tank check valve
- (2) Brass nipples: 3"
- (1) NPT brass tee
- (1) Expansion tank

Code	Description	Tank size (gal)	Lbs	USD
NA553362	1" FNPT	4.4	15	**826.00**
NA553366	1" press	4.4	15	**886.00**
NA553369	1" sweat	4.4	15	**809.00**
NA553372	1¼" FNPT	4.4	16	**956.00**
NA553376	1¼" press	4.4	16	**1,065.00**
NA553379	1¼" sweat	4.4	16	**938.00**

NEW

NA553

Boiler Trim Kits.
6 configurations combining 8 boiler installation components in one box.
This kit includes:
- (1) Caleffi DISCAL® air separator
- (1) RPZ backflow preventer
- (1) AutoFill™
- (1) Expansion tank check valve
- (2) Brass nipples: 3"
- (1) NPT brass tee
- (1) Expansion tank

Code	Description	Tank size (gal)	Lbs	USD
NA553362R	1" FNPT	4.4	19.4	**1,316.00**
NA553366R	1" press	4.4	19.4	**1,376.00**
NA553369R	1" sweat	4.4	19.4	**1,299.00**
NA553372R	1¼" FNPT	4.4	20.4	**1,446.00**
NA553376R	1¼" press	4.4	20.4	**1,555.00**
NA553379R	1¼" sweat	4.4	20.4	**1,428.00**

FITTINGS AND MISCELLANEOUS COMPONENTS

This diagram is for illustration purposes only

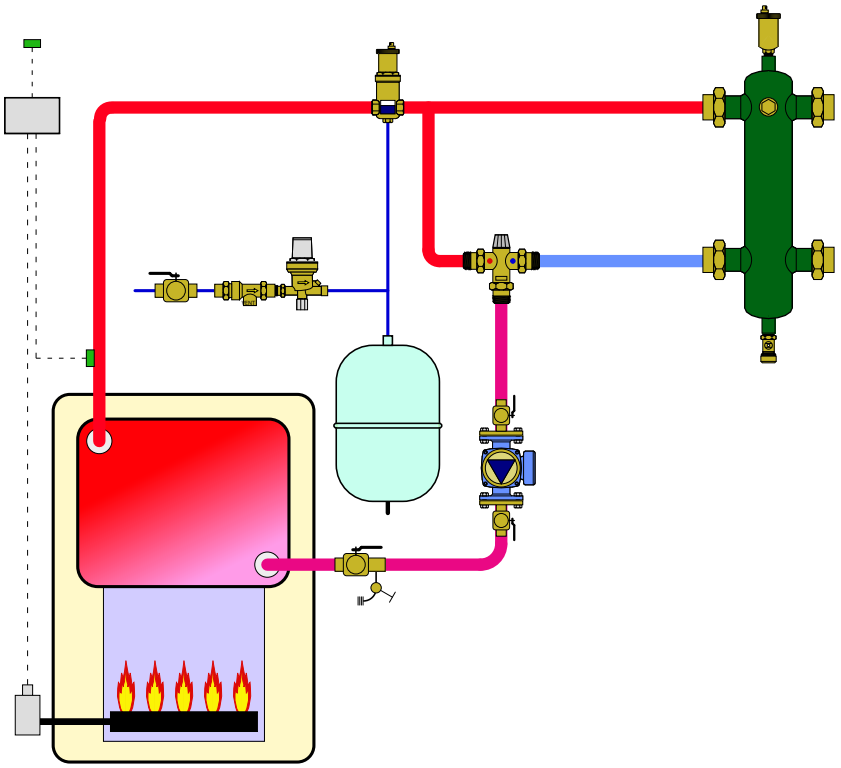

PRODUCTS INCLUDED IN SECTION

- Fittings configuration table
- Small mixing valve and zone valve fittings
- Press fitting kits
- Mixing valve fittings
- AutoFill™ and backflow preventer fittings
- Hydro separator fittings
- Fittings with threads
- Miscellaneous system components
- Uni-Switch™ Universal flow switch

FITTING CONFIGURATION TABLE

Product series	Code	Description	Nut code	Tailpiece code	Washer code	USD
535H PresCal™ (½")	NA20543	½" FNPT, ¾" nut, washer	incl. w/tail	F49644	incl. w/tail	28.80
533H PresCal™ (½")	NA20540	½" MNPT, ¾" nut, washer	F41186	F31868	R50058	23.70
553 AutoFill™	NA20549	½" sweat, ¾" nut, washer	F41186	NA10001	R50058	20.90
127 FlowCal™	NA20643	½" FNPT, 1" nut, washer	F61008	NA10569	F50055	28.80
	NA20640	½" MNPT, 1" nut, washer	F61008	R31981	F50055	24.80
	NA20640C	½" MNPT, 1" nut, washer, check	F61008	59893A	F50055	38.70
127 FlowCal+™	NA20649	½" sweat, 1" nut, washer	F61008	NA10002	F50055	20.50
	NA20649C	½" sweat, 1" nut, washer, check	F61008	59904A	F50055	34.60
132 QuickSetter+™	NA20646	½" press, 1" nut, washer	F61008	NA10403	F50055	26.50
	NA20647	½" PEX crimp, 1" nut, washer	F61008	F0000492	F50055	20.50
520 TankMixer™	NA20647C	½" PEX crimp, 1" nut, washer, check	F61008	NA10484	F50055	34.60
	NA20648	½" PEX expansion, 1" nut, washer	F61008	F0001007	F50055	20.50
521 MixCal™	NA20648C	½" PEX expansion, 1" nut, washer, check	F61008	NA10634	F50055	34.60
	NA20653	¾" FNPT, 1" nut, washer	incl. w/tail	F49645	incl. w/tail	32.60
5213 TMV (req. inlet port check)	NA20650	¾" MNPT, 1" nut, washer	F61008	31901A	F50055	28.80
	NA20650C	¾" MNPT, 1" nut, washer, check	F61008	59840A	F50055	49.40
5350 AutoFill™	NA20659	¾" sweat, 1" nut, washer	F61008	NA10003	F50055	24.60
	NA20659C	¾" sweat, 1" nut, washer, check	F61008	NA10165	F50055	45.30
533H PresCal™ (¾")	NA20656	¾" press, 1" nut, washer	incl. w/tail	NA16265	F50055	29.00
	NA20656C	¾" press, 1" nut, washer, check	F0000698	NA10419C	F50055	64.20
535H PresCal™ (¾")	NA20657	¾" PEX crimp, 1" nut, washer	F61008	F0000520	F50055	24.60
	NA20657C	¾" PEX crimp, 1" nut, washer, check	F61008	NA10485	F50055	45.30
5517 DISCAL®	NA20658	¾" PEX expansion, 1" nut, washer	F61008	F0001008	F50055	24.60
	NA20658C	¾" PEX expansion, 1" nut, washer, check	F61008	NA10635	F50055	45.30
644 Ball Valve	NA20660	1" MNPT, 1" nut, washer	incl. w/tail	59817A	F50055	47.60
	NA20660C	1" MNPT, 1" nut, washer, check	incl. w/tail	59894A	F50055	68.20
676 Zone Valve	NA20669	1" sweat, 1" nut, washer	incl. w/tail	59834A	F50055	43.00
	NA20669C	1" sweat, 1" nut, washer, check	incl. w/tail	59906A	F50055	63.60
Z2, Z3 Zone Valve	NA20666	1" press, 1" nut, washer	incl. w/tail	NA16266	F50055	49.80
	NA20667	1" PEX crimp, 1" nut, washer	F61008	F0000521	F50055	43.00
V40 flow meter	NA20667C	1" PEX crimp, 1" nut, washer, check	F61008	NA10486	F50055	63.60
	NA20668	1" PEX expansion, 1" nut, washer	F61008	F0001009	F50055	43.00
	NA20668C	1" PEX expansion, 1" nut, washer, check	F61008	NA10636	F50055	63.60
535H PresCal™ (1")	NA20763	1" FNPT, 1¼" nut, washer	incl. w/tail	F49646	incl. w/tail	46.00
	NA20767	1" PEX crimp, 1¼" nut, washer	R31495	NA10496	R50056	43.80
	NA20766	1" press, 1¼" nut, washer	incl. w/tail	NA10497	R50056	55.20
	NA20769	1" sweat, 1¼" nut, washer	incl. w/tail	F49657	incl. w/tail	33.80
535H PresCal™ (1¼")	NA20873	1¼" FNPT, 1½" nut, washer	incl. w/tail	F49647	incl. w/tail	83.30
	NA20879	1¼" sweat, 1½" nut, washer	R31589	41787 CST	R50057	75.00
535H PresCal™ (1½")	NA20983	1½" FNPT, 2" nut, washer	incl. w/tail	F0000493	R50008	127.00
	NA20989	1½" sweat, 2" nut, washer	incl. w/tail	F0000494	R50008	105.00
535H PresCal™ (2")	NA21193	2" FNPT, 2½" nut, washer	incl. w/tail	F0000495	R50060	175.00
	NA21199	2" sweat, 2½" nut, washer	incl. w/tail	F0000496	R50060	190.00
548, 5495 Seps (1")	NA20863	1" FNPT, 1½" nut, washer	R31589	31553 FD	R50005	51.40
	NA20869	1" sweat, 1½" nut, washer	R31589	31554 FD	R50005	52.00
	NA20866	1" press 1½" nut, washer	R31589	NA10406	R50005	85.00
548, 5495 Seps (1¼")	NA20973	1¼" FNPT, 2" nut, washer	R53003	31401 FD	R50008	109.00
	NA20979	1¼" sweat, 2" nut, washer	R53003	31403 FD	R50008	146.00
	NA20976	1¼" press 2" nut, washer	R53003	NA10407	R50008	150.00
548, 5495 Seps (1½")	NA21083	1½" FNPT, 2¼" nut, washer	R53004	R41441	R50047	119.00
5461 DISCALDIRTMAG™ (1½")	NA21089	1½" sweat, 2¼" nut, washer	R53004	41882A	R50047	152.00
	NA21086	1½" press 2¼" nut, washer	R53004	NA10408	R50047	200.00
548, 5495 Seps (2")	NA21293	2" FNPT, 2¾" nut, washer	R53005	31426 FD	R50048	184.00
5461 DISCALDIRTMAG™ (2")	NA21299	2" sweat, 2¾" nut, washer	R53005	31428 FD	R50048	217.00
	NA21296	2" press 2¾" nut, washer	R53005	NA10409	R50048	294.00
5231 MixCal+™ (1")	NA20860	1" MNPT 1½" nut, washer	R31589	NA10009	R50057	57.00
6000 LEGIOMIX® (1")	NA20869	1" sweat, 1½" nut, washer	R31589	31554 FD	R50057	52.00
	NA20866	1" press, 1-1/2" nut, washer	R31589	NA10410	R50057	85.00
5231 MixCal+™ (1¼")	NA20870	1¼" MNPT 1½" nut, washer	R31589	R41660	R50057	100.00
6000 LEGIOMIX® (1¼")	NA20879	1¼" sweat, 1½" nut, washer	R31589	41787 CST	R50057	75.00
	NA20876	1-1/4" press, 1-1/2" nut, washer	R11221	NA10411	R50057	110.00
5231 MixCal+™ (1½")	NA21180	1½" MNPT 2½" nut, washer	R51838	41371A	R50060	168.00
6000 LEGIOMIX® (1½")	NA21189	1½" sweat 2½" nut, washer	R51838	41788 CST	R50060	148.00
	NA21186	1½" press, 2-1/2" nut, washer	R51838	NA10412	R50060	221.00
5231 MixCal+™ (2")	NA21190	2" MNPT 2½" nut, washer	R51838	41372A	R50060	212.00
6000 LEGIOMIX® (2")	NA21199	2" sweat 2½" nut, washer	R51838	41789 CST	R50060	190.00
	NA21196	2" press, 2-1/2" nut, washer	R51838	NA10413	R50060	320.00

SMALL MIXING VALVE AND ZONE VALVE FITTINGS

Tail piece with check valve.
Low lead brass.

Code	Description	Lbs	USD
59893A	½" NPT male fits 1" nut	0.2	**30.10**
59840A	¾" NPT male fits 1" nut	0.3	**40.80**

Tail piece without check valve.
Low lead brass.

Code	Description	Lbs	USD
R31981	½" NPT male fits 1" nut	0.4	**16.00**
31901A	¾" NPT male fits 1" nut	0.4	**20.20**

Tail piece.
Low lead brass. Requires sealing washer R50055, not included.

Code	Description	Lbs	USD
59817A	1" NPT male with 1" nut	0.2	**45.30**
59894A	1" NPT male with 1" nut w/check valve	0.4	**65.80**

Tail piece with check valve.
Low lead brass.

Code	Description	Lbs	USD
59904A	½" NPT male fits 1" nut	0.2	**25.90**
59905A	¾" NPT male fits 1" nut	0.3	**36.60**

Copper press tail piece with 1" brass union nut. Low lead. Requires sealing washer, not included.

Code	Description	Lbs	USD
NA16264	½" press with 1" union nut	0.1	**24.20**
NA16265	¾" press with 1" union nut	0.1	**26.70**
NA16266	1" press with 1" union nut	0.1	**47.50**

Long copper press tail piece with 1" brass union slip nut. Low lead. Requires sealing washer, not included.

Code	Description	Lbs	USD
NA16265L	¾" long press with 1" union slip nut	0.3	**61.00**
NA16265LC	¾" long press with 1" union nut/check valve	0.3	**77.40**

Washer fits 1" union thread.

Code	Description	Lbs	USD
F50055	1" union washer	0.1	**2.20**

Tail piece.
Low lead brass.

Code	Description	Lbs	USD
NA10002	½" sweat fits 1" nut	0.3	**11.80**
NA10003	¾" sweat fits 1" nut	0.4	**15.90**

Tail piece.
Low lead brass. Requires sealing washer R50055, not included.

Code	Description	Lbs	USD
59834A	1" sweat with 1" nut	0.4	**40.70**
59906A	1" sweat with 1" nut w/check valve	0.5	**61.40**

Tail piece with high temperature check valve.
Low lead brass.

Code	Description	Lbs	USD
NA10164	½" sweat fits 1" nut	0.2	**36.00**
NA10165	¾" sweat fits 1" nut	0.3	**42.30**

Tail piece with high temperature check valve.
Low lead brass. Requires sealing washer R50055, not included.

Code	Description	Lbs	USD
NA10166	1" sweat with 1" nut w/check valve	0.4	**69.30**

Copper press low lead tail piece with check valve, requires F0000698 1" slip nut.

Code	Description	Lbs	USD
NA10419C	¾" press long fits 1" slip nut w/check	0.3	**61.80**

Copper press low lead tail piece, requires F0000698 1" slip nut.

Code	Description	Lbs	USD
NA10403	½" press fits 1" nut	0.1	**31.30**
NA10419	¾" press long fits 1" slip nut F0000698	0.3	**53.00**
NA10404	1" press fits 1" slip nut F0000698	0.4	**47.70**

Washer fits 1" union thread.
High temperature silicone rubber.
Working temperature: -40—350°F.

Code	Description	Lbs	USD
NA10302	1" union washer high temp silicone	0.1	**3.50**

SMALL MIXING AND ZONE VALVE FITTINGS

Union nut fits 1" union thread.

Code	Description	Lbs	USD
F61008	1" brass nut	0.2	**6.30**
F0000698	1" brass slip nut	0.2	**8.80**

Compression fitting

Code	Description	Lbs	USD
F0000718	3/8" compression tailpiece for 1" nut	0.1	**23.50**

PEX crimp tailpiece for 1" union nut, requires sealing washer and nut, not included.

Code	Description	Lbs	USD
F0000492	½" PEX for 1" union nut	0.1	**11.80**
F0000520	¾" PEX for 1" union nut	0.1	**15.90**
F0000521	1" PEX for 1" union nut	0.1	**34.20**

PEX crimp tailpiece for 1" union nut with check valve, requires sealing washer and nut, not included.

Code	Description	Lbs	USD
NA10484	½" PEX for 1" union nut	0.1	**25.90**
NA10485	¾" PEX for 1" union nut	0.1	**36.60**
NA10486	1" PEX for 1" union nut	0.1	**54.90**

Union nut fits 1" union thread.

Code	Description	Lbs	USD
F61008/C	1" chrome-plated nut	0.2	**7.50**

Two union nuts, washers and tail pieces fits 1" union thread. Low-lead brass.

Code	Description	Lbs	USD
NA12249	½" sweat with 1" union nuts	0.2	**41.00**
NA12259	¾" sweat with 1" union nuts	0.2	**49.20**
NA12269	1" sweat with 1" union nuts	0.3	**85.90**

NEW

PEX expansion tailpiece for 1" union nut, requires sealing washer and nut, not included.

Code	Description	Lbs	USD
F0001007	½" PEX for 1" union nut	0.1	**11.80**
F0001008	¾" PEX for 1" union nut	0.1	**15.90**
F0001009	1" PEX for 1" union nut	0.1	**34.20**

NEW

PEX expansion tailpiece for 1" union nut with check valve, requires sealing washer and nut, not included.

Code	Description	Lbs	USD
NA10634	½" PEX for 1" union nut	0.1	**25.90**
NA10635	¾" PEX for 1" union nut	0.1	**36.60**
NA10636	1" PEX for 1" union nut	0.1	**54.90**

5231 AND 6000 SERIES MIXING VALVE FITTINGS

Tail piece
Low lead brass.

Code	Description	Lbs	USD
NA10009	1" NPT male	0.2	**63.20**
R41660	1¼" NPT male	0.3	**72.30**
41371A	1½" NPT male	0.2	**81.40**
41372A	2" NPT male	0.2	**105.00**

Washer

Code	Description	Lbs	USD
R50057*	1½" union washer	0.1	**4.90**
R50060**	2½" union washer	0.1	**23.30**

*fits 1" and 1-1/4" valves
** fits 1-1/2" and 2" valves

Union nut

Code	Description	Lbs	USD
R31589*	1½" union nut	0.4	**21.60**
R51838**	2½" union nut	0.5	**52.40**

* fits 1" and 1-1/4" valves
**fits 1-1/2" and 2" valves

Tail piece
Low lead brass.

Code	Description	Lbs	USD
31554 FD	1" sweat	0.3	**50.00**
41787 CST	1¼" sweat	0.3	**49.30**
41788 CST	1½" sweat	0.3	**78.10**
41789 CST	2" sweat	0.5	**101.00**

NEW

Large press tail piece
Low lead brass.

Code	Description	Lbs	USD
NA20866	1" press assy with 1-1/2" union nut	0.3	**85.00**
NA20876	1¼' press assy with 1-1/2" union nut	0.3	**110.00**
NA21186	1½" press assy with 2-1/2" union nut	0.5	**221.00**
NA21196	2" press assy with 2-1/2" union nut	0.5	**320.00**

AUTOFILL™ FITTINGS

AutoFill™ union nut.

Code	Description	Lbs	USD
F41186	¾" union nut	0.1	**5.00**

AutoFill™ tail piece.

Code	Description	Lbs	USD
NA10001	½" sweat	0.3	**13.90**

AutoFill™ tail piece.

Code	Description	Lbs	USD
F31868	½" NPT male	0.1	**16.70**

AutoFill™ washer.

Code	Description	Lbs	USD
R50058	¾" union washer	0.1	**2.00**

BACKFLOW PREVENTER FITTINGS

Tail piece with screen fits 573 backflow preventer.

Code	Description	Lbs	USD
31970A	½" NPT female	0.1	**20.00**

Tail piece with screen fits 573 backflow preventer.

Code	Description	Lbs	USD
41380A	½" sweat	0.1	**20.00**

Washer union fits 573 backflow preventer.

Code	Description	Lbs	USD
R50065	Union washer	0.1	**4.80**

HYDRO SEPARATOR FITTINGS

Tail piece.

Code	Description	Lbs	USD
31553 FD	1" NPT female, fits 548006A, 549506A	0.3	**25.00**
31401 FD	1¼" NPT female, fits 548007A, 549507A	0.3	**56.50**
R41441	1½" NPT female, fits 548008A, 549508A	0.3	**54.50**
31426 FD	2" NPT female, fits 548009A, 549509A	0.4	**111.00**

Tail piece.

Code	Description	Lbs	USD
31554 FD	1" sweat, fits 548096A, 549596A	0.3	**50.00**
31403 FD	1¼" sweat, fits 548097A, 549597A	0.3	**93.20**
41882A	1½" sweat, fits 54898A, 549598A	0.3	**88.10**
31428 FD	2" sweat, fits 548099A, 549599A	0.4	**145.00**

Press tail piece.

Code	Description	Lbs	USD
NA10406	1" press, fits 548066A, 549566A	0.6	**64.60**
NA10407	1¼" press, fits 548067A, 549567A	0.7	**96.90**
NA10408	1½" press, fits 548068A, 549568A	0.9	**136.00**
NA10409	2" press, fits 548069A, 549569A	1.0	**222.00**

Union nut.

Code	Description	Lbs	USD
R31589	Fits 548006A and 548096A, 5495x6A	0.4	**21.60**
R53003	Fits 548007A and 548097A, 5495x7A	0.4	**42.70**
R53004	Fits 548008A and 548098A, 5495x8A	0.4	**42.70**
R53005	Fits 548009A and 548099A, 5495x9A	0.4	**48.90**

Union washer.

Code	Description	Lbs	USD
R50005	Fits 1" 548006A and 549096A, 5495x6A	0.2	**4.80**
R50008	Fits 1¼" 548007A and 548097A, 5495x7A	0.2	**10.00**
R50047	Fits 1½" 548008A and 548098A, 5495x8A	0.2	**19.90**
R50048	Fits 2" 548009A and 548099A, 5495x9A	0.2	**24.20**

FITTINGS WITH ¾" THREADS

Double nipple.

Code	Description	Lbs	USD
NA12122	¾" x ¾" male	0.3	**30.30**

Double nipple.

Code	Description	Lbs	USD
NA12172	¾" NPT x ¾" NPT	0.3	**30.30**

Union nut.

Code	Description	Lbs	USD
F41186	¾" union nut	0.1	**5.00**

Sweat adapter.

Code	Description	Lbs	USD
NA10118	¾" sweat x ¾" male thread	0.3	**30.30**

Nipple.

Code	Description	Lbs	USD
NA12152	¾" male w/ O-ring x ¾"male thread	0.3	**32.30**

FITTINGS WITH 1" THREADS

Double nipple.

Code	Description	Lbs	USD
NA12173	1" NPT x 1" NPT	0.4	**37.80**

Bushing.

Code	Description	Lbs	USD
NA10060	¾" NPT female w/ 1" male thread	0.3	**30.30**

Sweat adapter.

Code	Description	Lbs	USD
NA10061	¾" sweat adaptor w/ 1 " male thread	0.2	**31.60**

Sweat adapter.

Code	Description	Lbs	USD
NA10062	1" sweat adaptor w/ 1" male thd.	0.1	**32.70**

Double union connector
high temperature silicone O-ring
pre-installed inside union.

Code	Description	Lbs	USD
NA10272	1" female thread union	0.5	**58.20**

High temperature silicone O-ring,
replacement for NA10272.

Code	Description	Lbs	USD
NA10271	Red silicone o-ring	0.1	**4.70**

FITTINGS WITH 1" THREADS

Nipple.

Code	Description	Lbs	USD
NA10064	1" NPT w/ 1" male thread	0.2	**34.00**

Nipple.

Code	Description	Lbs	USD
NA12162	¾" male w/ O-ring x 1" male thread	0.2	**35.00**

Bushing.

Code	Description	Lbs	USD
NA10089	¾" female thread x 1" male thread	0.1	**25.20**

Plug.

Code	Description	Lbs	USD
NA10083	1" male threaded plug	0.2	**18.90**

Disk.

Code	Description	Lbs	USD
NA10104	1" disk	0.1	**5.00**

Cap.

Code	Description	Lbs	USD
586600	1" female thread cap	0.2	**17.10**

High temperature silicone flat 1" washer.

Code	Description	Lbs	USD
NA10302	1" flat silicone gasket	0.1	**3.50**

FITTINGS WITH 1¼" THREADS

Double nipple.

Code	Description	Lbs	USD
NA12124	1¼" x 1¼" thread	0.4	**60.50**

Sweat adapter.

Code	Description	Lbs	USD
NA10119	1" sweat adapter x 1¼" union thread	0.4	**41.60**

Bushing.

Code	Description	Lbs	USD
NA10087	1" female x 1¼" male thread bushing	0.4	**30.50**

Bushing.

Code	Description	Lbs	USD
61215A	1" NPT F x 1¼“ M thread bushing	0.8	**30.30**

Nipple.

Code	Description	Lbs	USD
R31706	1" male x 1¼" male nipple	0.3	**37.80**

Plug.

Code	Description	Lbs	USD
NA10236	1¼" male threaded plug	0.1	**23.70**

Disk.

Code	Description	Lbs	USD
R11059	1¼" female disk	0.1	**6.30**

MISCELLANEOUS SYSTEM COMPONENTS

519

Differential pressure by-pass valve.
Adjustable from 2 to 10 psi.
Brass body.
Max. working pressure: 150 psi.
Working temperature range: 32 – 230°F.
¾" flow up to 9 gpm.
1" flow up to 40 gpm.
1¼" flow up to 45 gpm.

Code	Description	Lbs	USD
519502A	¾" NPT female union	1.0	**186.00**
519566A	¾" press union	1.0	**211.00**
519599A	¾" sweat union	1.0	**184.00**
519600A	1" FNPT in, 1" NPT male union out	1.4	**289.00**
519609A	1" FNPT in, 1" sweat union out	1.4	**289.00**
519700A	1¼" FNPT in, 1¼" NPT male union out	1.5	**347.00**
519709A	1¼" FNPT in, 1¼" sweat union out	1.5	**347.00**

538

Drain valve. Brass body.
¾" garden hose thread with cap.
Max. working pressure: 150 psi.
Max. working temperature: 250°F.

Code	Description	Lbs	USD
538202 FD	¼" NPT male x ¾" GHT	0.3	**21.10**
538402 FD	½" NPT male x ¾" GHT	0.3	**21.50**

NA503

Tridicator dual pressure / temperature gauge for boilers. Dial size: 3 1/8".
Pressure range: 0—75 PSI.
Temperature range: 60—320 F.
¼" NPT rear probe.
For direct fluid stream submersion.

Code	Description	Lbs	USD
NA503040	¼" NPT male center back	0.2	**49.40**

688

Temperature gauge with well pocket fitting for inserting into manifold ball valves.
Working temperature range: 30 – 210° F.
Face dial diameter: 2".

Code	Description	Lbs	USD
688003A	Gauge with pocket well	0.2	**55.80**
NA10498	Replacement pocket well, low-lead	0.1	**5.50**
F67037	O-ring fits F11344	0.1	**1.20**

NA102

Union with temperature gauge.
Brass body and fittings.
Max. working pressure: 150 psi.
Face dial diameter: 2".
Dial scale: 30—210° F.

Code	Description	Lbs	USD
NA10295	½" sweat union	2.2	**122.00**
NA10296	1" sweat union	2.2	**131.00**

NA101

Ball valve. Brass body.
Max. working pressure: 600 psi.
Max. working temperature: 365°F.

Code	Description	Lbs	USD
NA10167	½" sweat x ½" sweat	0.5	**26.00**

NA510

In-line union flow check valve.
Brass body and fittings.
Max. percentage of glycol: 50%.
Max. working pressure: 150 psi.
Temperature range: 32—250°F.
Open pressure: 0.29 psi.

Code	Description	Cv	Lbs	USD
NA51059	¾" sweat union	12	0.7	**82.50**
NA51069	1" sweat union	17	1.0	**105.00**

NA121

Sweat union with union thread nut.
Max. working pressure: 150 psi.
Max. working temperature: 250°F.

Code	Description	Lbs	USD
NA12153	¾" sweat union, 1" union thread nut	0.7	**56.30**
NA12154	1" sweat union, 1" union thread nut	0.9	**61.90**
NA12155	1" sweat union, 1¼" union thread nut	1.0	**88.10**

UNIVERSAL FLOW SWITCH

626 Uni-Switch™

Universal flow switch.
Suitable for 1" to 8" pipe size.
Working pressure: 150 psi.
Working temperature range: -20 – 250°F.
Minimum flow: 5.7 gpm.
Switch contacts: NO or NC
Switch rating: 15 A
CE, cUL, NEMA Type 5, IP 54.

Code	Description	Lbs	USD
626600A	1" NPT male thread	2.3	**361.00**
626009	Replacement paddle assembly*	0.1	**33.80**

* stainless steel

Operating principle

The flow switch is composed of a paddle (blade) (1) integral with a control rod (2) connected, at the top, to an adjustable counter spring (3). The assembly, by turning around a pin under the action of the water flow, operates a microswitch contained in a protective casing (4). At rest, the counter spring keeps the microswitch contact open. When the increasing flow rate of the medium within the piping becomes equal or greater than the trip flow rate, the thrust (5) on the blade applied (1) by the flow overcomes the opposing force applied by the adjustable counter spring (3) thus making the microswitch contact close. With a decreasing flow rate, on reaching the trip flow rate values, the flow thrust on the blade is not enough to overcome the opposing force applied by the adjustable spring, so the blade returns to the rest position and the microswitch contact opens.
The trip values for closing (increasing flow) and opening (decreasing flow) the microswitch contact can be modified with the adjusting screw (6).

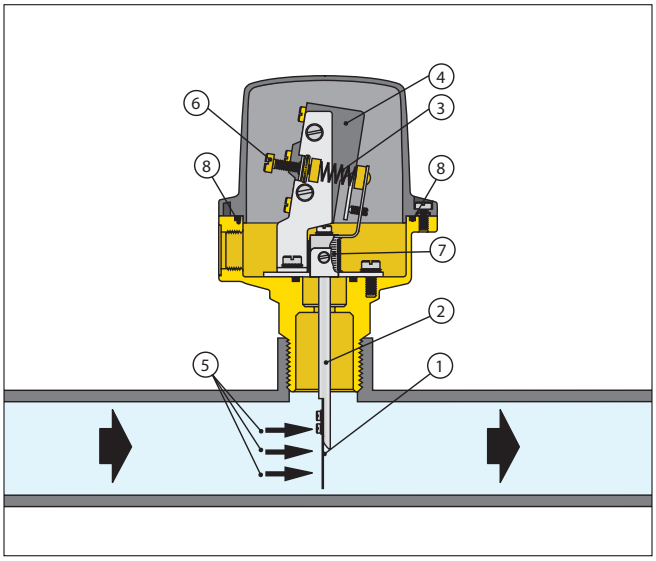

Function

The flow switch detects whether there is any flow in the piping and opens or closes an electrical contact. It is normally used in heating, air-conditioning, refrigeration, water treatment, additive pumping and process systems in general. The flow switch can control devices such as pumps, burners, compressors, refrigerators, motorized valves; to turn on indicator and alarm devices and regulate equipment for dosing water additives.

In heating systems, the flow switch will switch the burner off in case of a lack of fluid circulation in heating circuit. A lack of fluid circulation would otherwise impair the operation of the temperature-sensitive safety and protection devices.

Installation

The unit is equipped with a set of paddles (blades) (1), to be used for different pipe diameters, particularly sized to allow easy installation and minimal head losses.

For diameters equal to or greater than 3" (DN 80), it is necessary to add to the preassembled blades in increasing order on the long blade (2) (supplied in the package), just cutting it to the size corresponding to the desired diameter. Replacement paddle or blade assemblies are available, order part number 626009.

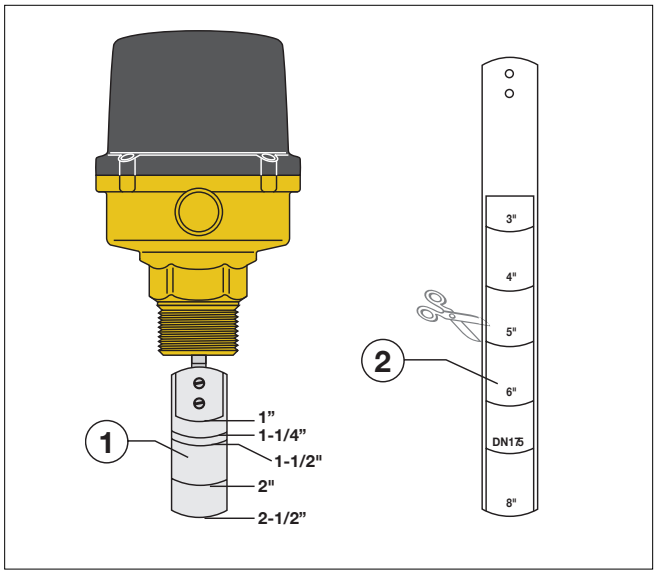

Flow rate adjustment

Adjustments should be carried out as follows: turn the adjusting screw (1) in a clockwise direction for the contacts to close at higher flow rates or in a counterclockwise direction for lower flow rates. When the adjustment has been made, lock the screw (A) with the locking ring nut (2). Avoid all contact with the presetting screw (3). An incorrect setting would seriously impair the operation of the switch.

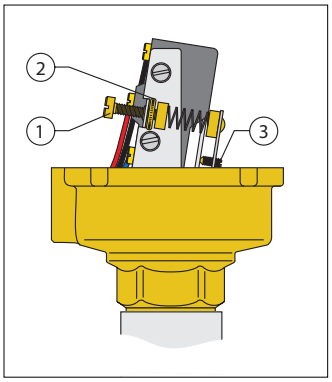

RENEWABLES, SOLAR, GEOTHERMAL AND BIOMASS DEVICES

This diagram is for illustration purposes only

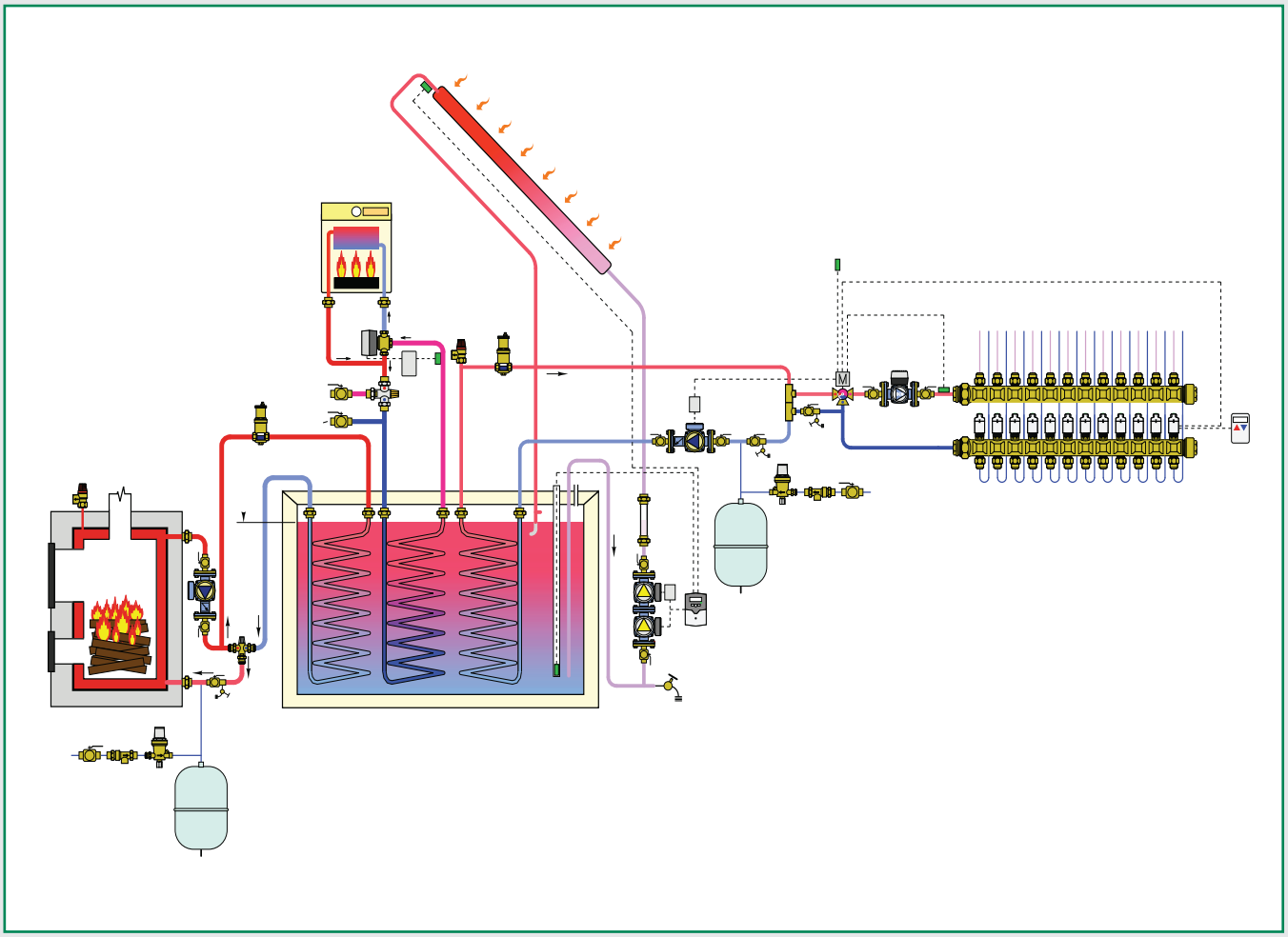

PRODUCTS INCLUDED IN SECTION

- Storage tanks and accessories
- Pump stations and fittings
- Air vents, air separator, and safety relief valves
- Mixing valves
- Geothermal manifolds and fittings
- Geothermal accessories
- PE pipe connection
- Boiler protection high-flow thermostatic mixing valve
- Boiler protection recirculation and distribution unit
- Boiler protection valve accessories

STORAGE TANKS

NAS200 ThermoCon™

ThermoCon™ thermal buffering tanks have a porcelain glass coated steel lining and power coated steel external cover.
Drain port/valve.
Max. working pressure: 150 psi.
Working temperature: -40—190ºF.
Recommended max. delivery water temperature: 120ºF.
Testing pressure: 300 psi.
Tank insulation: 2" non-CFC foam.
Insulation thermal conductivity: R16.
Electric element: 4.5 Kw. UL listed.
Connections (all FNPT):
25 gal: top; two 1-1/2", one 3/4". sides; four 1-1/2", one 3/4".
50, 80, 119 gal: top; three 3/4", sides; seven 2".

Code	Description	Lbs	USD
NAS20025	ThermoCon™ 25 gal.	100	**3,177.00**
NAS20050	ThermoCon™ 50 gal.	200	**3,797.00**
NAS20080	ThermoCon™ 80 gal.	250	**4,488.00**
NAS20120	ThermoCon™ 119 gal.	350	**5,939.00**

*Reduction of Lead in Drinking Water Act Compliant: 0.25% max. weighted average lead content. Certified through Underwriters Laboratory (UL) in accordance with NSF/ANSI 372. Meets CSA C309.

EXPANSION TANK

259

Solar system expansion tanks with ¾" straight thread.
System temp. range: 15—250°F.
Maximum diaphragm temp : 160°F.
Maximum working pressure: 150 psi.
Pre-charge pressure: 35 psi.
Maximum percentage of glycol: 50%.

Code	Description	Lbs	USD
259012	3 gallon, ¾" male straight thread	14	**190.00**
259018	5 gallon, ¾" male straight thread	17	**237.00**
259025	7 gallon, ¾" male straight thread	21	**307.00**
259033	9 gallon, ¾" male straight thread	24	**523.00**
259050	13 gallon, ¾" male straight thread	28	**659.00**

STORAGE TANK ACCESSORIES

Reducer bushing fits tanks without HX for installing temperature probe.
Low lead brass
1 5/8" hex head.

Code	Description	Lbs	USD
NA10234	2" NPT male x ¾" NPT female	0.4	**88.50**

NA255

6' flexible stainless steel extension for connecting expansion tank to pumping station.

Code	Description	Lbs	USD
NA255002	¾" union nuts	1.0	**123.00**

Sensor well, ¼" Ø I.D. Insertion length: 1¾".

Code	Description	Lbs	USD
NA15029	Sensor well, ¾" NPT male thread	0.5	**61.80**

Cap for plugging tank connection on pump station while leak testing.
Requires (R50058) washer.

Code	Description	Lbs	USD
R21180	¾" female cap	0.1	**7.00**

255

Expansion tank connection kit.
Includes ¾" connection, wall bracket, hardware and double check valve.

Code	Description	Lbs	USD
255007	S.S. flexible tank connection kit	3.0	**222.00**

Expansion tank fitting connections. ¾" union nut connects to the expansion tank.

Code	Description	Lbs	USD
NA25540	½" NPT union connection set	0.1	**32.70**
NA25549	½" sweat union connection set	0.1	**30.20**

Pipe nipple for attaching air vent to top of storage tank with reducing bushing.

Code	Description	Lbs	USD
NA10160	½" NPT male x ½" male NPT x 3"	0.1	**14.40**

COMMERCIAL SOLAR PUMP STATION

NA255

The Solar pump station is pre-assembled and leak-tested unit without fittings for transferring heat from the collector to the storage tank. The pump station contains the following:
Ball valves in flow and return in combination with flow check valves.
Foam insulation shell.
Ports for filling and flushing.
Manual air vents.
Balance/flow meter.
Temperature gauges in flow and return.
Pressure gauge.
Safety relief valve: 90 psi.
Pump: Star S 30 U25 three-speed.
Connection: 1" male straight thread.
Max. working pressure: 150 psi.
Max. working temp: 360°F.
Adjustable flow: ½ to 10 gpm.
Agency approval: cULus.

(Select fittings to the right)

Code	Description	Lbs	USD
NA255160	1" male union thread	25	**2,417.00**

Replacement pump fits solar pump station NA255. 120 VAC / 1.3 A.
30 feet head / 30 gpm. 1½" male union thread.

(install in-line with NA122 union fittings on page 94)

Code	Description	Lbs	USD
NA12169	Wilo Star S 30 replacement pump	6.0	**599.00**

Replacement solar pump station pressure gauge.
Pressure range: 0—90 psi.
Dial size: 1 ½"

Code	Description	Lbs	USD
NA12156	¼" male center back mount	0.1	**54.10**

SOLAR GLYCOL

NA101 SolarHD™

Pre-mixed 50% high temperature non toxic glycol, FDA reference: 21 CRF 182.1666, Gosselin TOXICITY INDEX 1, Generally recognized as safe for use as direct food additives. NSF listed, Category Code: HT1, HT2, NSF Registration No. 144912. Compatable with other propylene glycols.

Code	Description	Lbs	USD
NA10103	5 gallon bucket	45	**288.00**

PUMP STATION FITTINGS

NA155

NA255160 Solar pump stations fitting kits. (mix & match for top & bottom)

Code	Description	Lbs	USD
NA15550	¾" NPT male union kit	1.0	**192.00**

NA255160 Solar pump stations fitting kits. (mix & match for top & bottom)

Code	Description	Lbs	USD
NA15559	¾" sweat union kit	1.0	**156.00**

NA255160 Solar pump stations fitting kits. (mix & match for top & bottom)

Code	Description	Lbs	USD
NA15560	1" NPT male union kit	1.1	**192.00**

NA255160 Solar pump stations fitting kits. (mix & match for top & bottom)

Code	Description	Lbs	USD
NA15569	1" sweat union kit	1.1	**158.00**

NA255160 Solar pump stations fitting kits. (mix & match for top & bottom)

Code	Description	Lbs	USD
NA15570	1¼" male, 1" SolarFlex™	0.9	**65.60**

FILL AND FLUSH CART

NA255 HYDROFLUSH™

The fill and flush pump cart is portable, leak-tested for a safe, quick and clean way to fill and flush solar, geo thermal and hydronic systems.
Medium: water, glycol and cleaning fluids.
Tank: 10 gallon with dirt filter.
Max. tank medium temperature: 140°F.
Pump delivery flow: 1—15 gpm
Pump feet of head: 125
Max. pump pressure: 55 psi.
Pump power: ½ HP (120 V AC).
Isolating ball valves: ¾" garden hose thread.
Transfer hoses: 8' with ¾" GHT (2 ea).
Dimensions: 48"H × 20"W × 18"D.

Code	Description	Lbs	USD
NA25510	Wash, fill and flush cart	60	**3,858.00**

SOLAR PUMP STATIONS

278 & 279

Solar pump stations are pre-assembled and leak-tested. Safety relief valve. Ball valves with built-in flow checks in return (and flow for dual-line models). Temperature gauges in return (and flow for dual-line models). Pressure gauge. Manual air vent (dual-line models only). Expansion tank connection. Connections for flushing and filling. Foam insulation.
Balance/flow meter: 1— 8 gpm scale.
Pump: three speed
Pump performance: 19 ft head/8 gpm.
Safety relief valve: 90 psi.
Max. working pressure: 145 psi.
Max. working temp: 350ºF.
Connections: ¾" female thread.

(Select adaptors to the right)

Code	Description	Lbs	USD
279051A	Dual-line solar pump station	17	**1,455.00**
279051	Dual-line solar station w/o pump	12	**1,164.00**
278751A	Single-line solar pump station	14	**1,270.00**
278751	Single-line solar station w/o pump	10	**978.00**
278011	Controller housing	0.5	**70.90**

Replacement pumps fit current solar pump stations 278 & 279, plus discontinued 255 & 256 stations.
3 speed 115 V
1" male union thread.
Agency approval: cULus.

(install in-line with NA122 union fittings on page 84)

Code	Description	Lbs	USD
NA10481	Grundfos 15-58U, 21' head / 18 gpm	5	**376.00**

Temperature gauges fit 278 & 279 solar stations.

Code	Description	Lbs	USD
F29759	1½" red dial temp. gauge	0.1	**56.10**
F29758	1½" blue dial temp. gauge	0.1	**56.10**

PUMP STATION FITTINGS

½" SolarFlex™ directly to top or bottom.
2 each.

Code	Description	Lbs	USD
NA26640	¾" male thread x ¾ male thread	0.6	**64.70**

½" SolarFlex™ directly to top and bottom.
4 each.

Code	Description	Lbs	USD
NA26740	¾" male thread x ¾ male thread	1.0	**130.00**

¾" SolarFlex™ directly to top or bottom.
2 each.

Code	Description	Lbs	USD
NA26650	¾" male thread x 1" male thread	0.6	**70.00**

¾" SolarFlex™ directly to top and bottom.
4 each.

Code	Description	Lbs	USD
NA26750	¾" male thread x 1" male thread	1.0	**140.00**

1" SolarFlex™ directly to top or bottom.
2 each.

Code	Description	Lbs	USD
NA26660	¾" male thread x 1¼" male thread	0.6	**135.00**

1" SolarFlex™ directly to top and bottom.
4 each.

Code	Description	Lbs	USD
NA26760	¾" male thread x 1¼" male thread	1.0	**271.00**

PUMP STATION FITTINGS

½" sweat fittings to top or bottom.
2 each.

Code	Description	Lbs	USD
NA26649	¾" male thread x ½" sweat fitting	0.6	**106.00**

½" sweat fittings to top and bottom. 4 each.

Code	Description	Lbs	USD
NA26749	¾" male thread x ½" sweat fitting	1.0	**213.00**

¾" sweat fittings to top or bottom.
2 each.

Code	Description	Lbs	USD
NA26659	¾" male thread x ¾" sweat fitting	0.6	**120.00**

¾" sweat fittings to top and bottom. 4 each.

Code	Description	Lbs	USD
NA26759	¾" male thread x ¾" sweat fitting	1.0	**239.00**

1" sweat fittings to top or bottom.
2 each.

Code	Description	Lbs	USD
NA26669	¾" male thread x 1" sweat fitting	0.6	**131.00**

1" sweat fittings to top and bottom. 4 each.

Code	Description	Lbs	USD
NA26769	¾" male thread x 1" sweat fitting	1.0	**261.00**

DRAINBACK PUMP STATION

278

Drainback solar pump station designed with a high head and steep pump curve which are pre-assembled and leak-tested.
Safety relief valve, ball valve, temperature gauge, pressure gauge, air fill valve.
Connections for flushing and filling with foam insulation.
Balance/flow meter: 2—8 gpm scale.
Pump: Grundfos UP15-100.
Performance: 36 feet head / 8 gpm.
Safety relief valve: 90 psi.
Max. working pressure: 145 psi.
Max. working temp: 350ºF.
Connections: ¾" female thread.
(Select adaptors to the left)

Code	Description	Lbs	USD
278951A	Drainback solar pump station	14	**1,356.00**

NA121

Replacement single speed 120 V,
1" male union thread.
Flow 36 feet head / 8 gpm.
Agency approval: cULus.
(install in-line with NA122 union fittings on page 94)

Code	Description	Lbs	USD
NA12171	Grundfos Solar 15-100	6.0	**466.00**

DC SOLAR PUMP

NA267

8 to 34 VDC, DC Strong solar pump for mounting in solar stations.
15 feet head / 7 gpm at 24 VDC.
8 feet head / 4 gpm at 12 VDC.
Power consumption: 30—45 W.
Max. working pressure: 150 psi.
Max. temperature: -10—230°F.

(install in-line with NA122 union fittings on page 94)

Shown mounted in 279051 or can be mounted inside 278751.

Code	Description	Lbs	USD
NA26711	1" male union thread	3.0	**759.00**

LOW LEAD MIXING VALVES

2521

Adjustable thermostatic three-way mixing valve for solar systems with built-in inlet check valves.
Setting range: 80—150ºF.
Max. working pressure: 200 psi.
Max. inlet temperature: 210ºF.
Connection: ½", ¾", 1" sweat.
Certified to ASSE 1017, CSA B125.3, UPC, IPC, Low Lead Laws and listed by ICC-ES for use in accordance with the U.S. and Canadian plumbing codes.

ASSE 1017

Code	Description	Lbs	USD
252149A	½" sweat unions	1.2	**281.00**
252158A	¾" sweat unions with gauge	1.2	**363.00**
252159A	¾" sweat unions	1.2	**295.00**
252168A	1" sweat unions with gauge	1.2	**413.00**
252169A	1" sweat unions	1.2	**342.00**

Check valve for use in 2521 mixing valve.
Max. inlet temperature: 210ºF.

Code	Description	Lbs	USD
R29326	Check valve insert	0.1	**10.40**

Operating principle

The controlling element of the solar thermostatic mixing valve is a temperature sensor that is fully immersed in the mixed water outlet passage. As it expands or contracts, the sensor continuously establishes the correct proportion of hot and cold water entering the valve. The flow is regulated by a piston sliding in a cylinder between the hot and cold water passages. Even when there are pressure drops due to the drawing off of hot or cold water for other uses or variations in the incoming temperature, the mixer automatically regulates the water flow to obtain the required temperature.

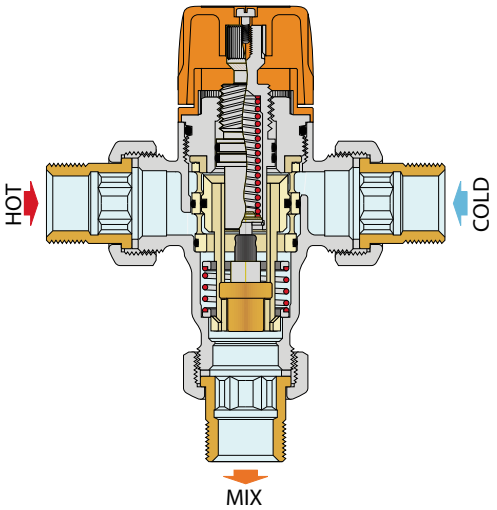

AIR SEPARATOR AND SAFETY RELIEF VALVES

251 DISCAL®

Air separator for solar heating systems.
Working temperature range: -20—320ºF.
Max. working pressure: 150 psi.
Max. discharge pressure: 150 psi.
Connections: Main, ¾" NPT, female
Bottom, ½" NPT, female

Code	Description	Lbs	USD
251003A	¾" NPT female	2.0	**232.00**

253

Safety relief valves for solar systems.
Working temperature range: -20—360ºF.
Normal pressure: 150 psi.
Opening over pressure: 10%.
Closing differential: 20%.
Discharge capacity: 171,000 Btu.
Connections: Inlet, ½" female.
Discharge, ¾" female.
TÜV certified to TRD-721-SV100 7.7.
Meets ANSI Z21.22 standard.

TÜV Rheinland is an approved U.S. Nationally Recognized Testing Laboratory (NRTL) Certification Body for Pressure Equipment. Meets ANSI Z21.22 "Relief Valves for Hot Water Supply Systems."

Code	Description	Lbs	USD
253042	Factory set to 35 psi	0.3	**86.90**
253043	Factory set to 45 psi	0.3	**86.90**
253044	Factory set to 60 psi	0.3	**86.90**
253046	Factory set to 90 psi	0.3	**86.90**
253048	Factory set to 120 psi	0.3	**86.90**
253040	Factory set to 150 psi	0.3	**86.90**

AUTOMATIC AIR VENTS

250

Automatic air vent for solar systems.
Working temperature range: -20—360ºF.
Max. working pressure: 150 psi.
Max. discharge pressure: 75 psi.

Code	Description	Lbs	USD
250041A	½" MNPT	0.3	**87.30**

Function

Automatic air vents are used in the closed circuits of solar heating systems. They allow air contained in the fluid to be released automatically during the filling process, through a valve operated by a float in contact with fluid in the system.

The shut-off valves are used in combination with the automatic air vents to isolate them after filling the circuit of solar heating systems. These series of products have been specially made to work at high temperatures with a glycol medium.

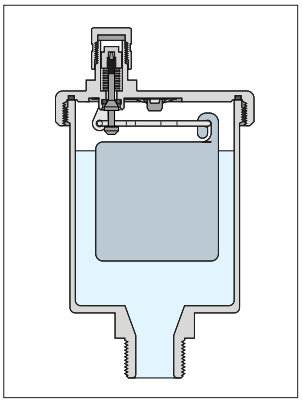

NA292

Shut-off fits automatic air vent.
Working temperature range: -20—360ºF.
Max. working pressure: 150 psi.

Code	Description	Lbs	USD
NA29284	½" FNPT x ½" MNPT	0.2	**71.00**

251 DISCALAIR®

High-performance automatic air vent for solar heating systems.
Working temperature range: -20—320ºF.
Max. working pressure: 150 psi.
Max. discharge pressure: 150 psi.

Code	Description	Lbs	USD
251004A	½" FNPT	0.8	**175.00**

Function

DISCALAIR® solar devices are used in hydronic systems or in the filling and start-up phase of solar heating systems to discharge evenly discharge large quantities of air that have formed in the circuits. This function is performed even when there is considerable pressure due to the special geometry of the discharge mechanism, which is identical to the mechanism on DISCAL® Solar 251 series air separators.

This particular series of automatic air vent valves have been specifically designed to work at high temperature with a glycol medium, which is typical of solar heating systems.

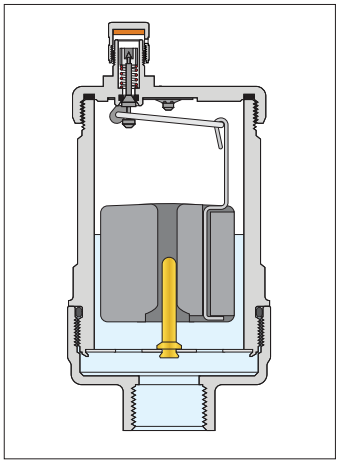

NA102

Vent cap adapter to connect discharge tube. Fits all air vents and air separators except 5026 and 5027 series.

Code	Description	Lbs	USD
NA10204	¼" MNPT	0.1	**30.30**

MANIFOLDS

110 GeoCal™

GeoCal™ left or right hand distribution manifold assemblies with temperature gauges, air vents and drain valves.
1¼" F NPT brass inlet/outlet ports.
Max. working pressure: 90 psi.
Max. system test pressure: 150 psi.
Working temperature range for: water, glycol & saline solutions: 15—140ºF.
Ethanol & methanol solutions: 15—90ºF.
Ambient temp. range: -5—140ºF.
Max. flow rate: 24 gpm total all circuits.

Code	Description	Lbs	USD
1107B5LA	Left side connections, 2 circuits	16	**1,336.00**
1107B5RA	Right side connections, 2 circuits	16	**1,336.00**
1107C5LA	Left side connections, 3 circuits	18	**1,475.00**
1107C5RA	Right side connections, 3 circuits	18	**1,475.00**
1107D5LA	Left side connections, 4 circuits	20	**1,623.00**
1107D5RA	Right side connections, 4 circuits	20	**1,623.00**
1107E5LA	Left side connections, 5 circuits	22	**1,761.00**
1107E5RA	Right side connections, 5 circuits	22	**1,761.00**
1107F5LA	Left side connections, 6 circuits	23	**1,899.00**
1107F5RA	Right side connections, 6 circuits	23	**1,899.00**
1107G5LA	Left side connections, 7 circuits	25	**2,069.00**
1107G5RA	Right side connections, 7 circuits	25	**2,069.00**
1107H5LA	Left side connections, 8 circuits	26	**2,207.00**
1107H5RA	Right side connections, 8 circuits	26	**2,207.00**

PE PIPE CONNECTIONS

NA102

GeoGrip™ manifold outlet connector for joining manifold to polyethylene pipe. (Includes union nut and gasket)

Code	Description	Lbs	USD
NA10246	¾" PE pipe compression	0.8	**57.30**
NA10247	1" PE pipe compression	1.0	**71.00**

863

GeoGrip™ brass sleeve coupling for joining two polyethylene pipes.

Code	Description	Lbs	USD
863027	¾" x ¾" PE pipe compression	0.8	**31.80**
863034	1" PE pipe compression	1.0	**46.70**

NA102

Vent cap adapter to connect discharge tube. (Ethanol and methanol systems). Fits onto air vent.

Code	Description	Lbs	USD
NA10204	¼" NPT male x female	0.1	**30.30**

FITTINGS

110

GeoCal™ manifold outlet fitting, includes union nut and gasket.

Code	Description	Lbs	USD
110050A	¾" male NPT tail piece	0.4	**43.50**
110060A	1" male NPT tail piece	0.6	**47.70**

861

GeoGrip™ polyethylene pipe fittings.
For joining polyethylene pipe to 132 series QuickSetter™ or NA139 ball valves.

Code	Description	Lbs	USD
861527A CST	¾" M NPT x ¾" PE pipe compression	0.2	**26.50**
861634A CST	1" M NPT x 1" PE pipe compression	0.6	**42.40**
NA10288	¾" M NPT x 1" PE pipe compression	0.2	**59.10**

GEOTHERMAL ACCESSORIES

132

QuickSetter™ balancing valve with flow meter. Direct reading of flow rate.
Brass valve body and flow meter.
Graduated scale flow meter with magnetic movement flow rate indicator.
Max. working pressure: 150 psi.
Temperature range: 14—230°F.
Max. percentage of glycol: 50%.

Code	Description	Flow scale (gpm)	Lbs	USD
132552A	¾" FNPT	2.0—7.0	1.8	**311.00**
132662A	1" FNPT	3.0—10.0	2.4	**363.00**
132772A	1¼" FNPT	5.0—19.0	2.8	**482.00**
132882A	1½" FNPT	8.0—32.0	3.4	**571.00**
132992A	2" FNPT	12.0—50.0	4.4	**700.00**
F19346	Replacement by-pass valve stem*		0.1	**58.40**

* With operating ring

REPLACEMENT PARTS

687

Manifold temperature gauge with drywell.
-20—120ºF.

Code	Description	Lbs	USD
687000	2½" diameter	0.2	**29.40**

BOILER PROTECTION HIGH-FLOW THERMOSTATIC MIXING VALVES

280 ThermoProtec™ NPT

Boiler protection high-flow thermostatic mixing valve.
Changeable thermostatic sensor cartridge.
Brass body and lower plug.
Max. working pressure: 150 psi.
Working temperature range: 40—212ºF.
Thermostatic sensor cartridge:
130°F & 140°F Tset standard selections, see below.
115°F, 160°F Tset optional (field replaceable).
Sensor cartridge accuracy: ±4°F.
By-pass from boiler complete closing temperature: Tset +18°F (ex. 130°+18°=148°F).

Code	Description	Lbs	USD
280165A	1" NPT male unions 130ºF Tset	11	**468.00**
280166A	1" NPT male unions 140ºF Tset	11	**468.00**
280175A	1¼" NPT male unions 130ºF Tset	11	**538.00**
280176A	1¼" NPT male unions 140ºF Tset	11	**538.00**

280 ThermoProtec™ Sweat

Boiler protection high-flow thermostatic mixing valve.
Changeable thermostatic sensor cartridge.
Brass body and lower plug.
Max. working pressure: 150 psi.
Working temperature range: 40—212ºF.
Thermostatic sensor cartridge:
130°F & 140°F Tset standard selections, see below.
115°F, 160°F Tset optional (field replaceable).
Sensor cartridge accuracy: ±4°F.
By-pass from boiler complete closing temperature: Tset +18°F (ex. 130°+18°=148°F).

Code	Description	Lbs	USD
280965A	1" sweat unions 130ºF Tset	11	**438.00**
280966A	1" sweat unions 140ºF Tset	11	**438.00**
280975A	1¼" sweat unions 130ºF Tset	11	**516.00**
280976A	1¼" sweat unions 140ºF Tset	11	**516.00**

BOILER PROTECTION RECIRCULATION AND DISTRIBUTION UNITS

281 ThermoBloc™ NPT

ThermoBloc™ boiler protection recirculation and distribution unit.
Suitable fluids: water, up to 50% glycol solutions.
Max. working pressure: 150 psi.
Working temperature range: 40—210ºF.
Maximum pumping capacity: 10 gpm.
Temperature gauge scale: 30—250ºF.
Thermostatic sensor:
130ºF & 140°F Tset standard selections, see below.
115ºF, 160ºF Tset optional models*.
Sensor cartridge accuracy: ±4ºF.
By-pass from boiler complete closing temperature: Tset +18°F (ex. 130°+18°=148°F).
* Consult factory

Code	Description	Lbs	USD
281165A	1" NPT male unions 130ºF Tset	11	**1,441.00**
281166A	1" NPT male unions 140ºF Tset	11	**1,441.00**
281175A	1¼" NPT male unions 130ºF Tset	11	**1,657.00**
281176A	1¼" NPT male unions 140ºF Tset	11	**1,657.00**

281 ThermoBloc™ Sweat

ThermoBloc™ boiler protection recirculation and distribution unit.
Suitable fluids: water, up to 50% glycol solutions.
Max. working pressure: 150 psi.
Working temperature range: 40—210ºF.
Maximum pumping capacity: 10 gpm.
Temperature gauge scale: 30—250ºF.
Thermostatic sensor:
130ºF & 140°F Tset standard selections, see below.
115ºF, 160ºF Tset optional models*.
Sensor cartridge accuracy: ±4ºF.
By-pass from boiler complete closing temperature: Tset +18°F (ex. 130°+18°=148°F).
* Consult factory

Code	Description	Lbs	USD
281965A	1" sweat unions 130ºF Tset	11	**1,347.00**
281966A	1" sweat unions 140ºF Tset	11	**1,347.00**
281975A	1¼" sweat unions 130ºF Tset	11	**1,585.00**
281976A	1¼" sweat unions 140ºF Tset	11	**1,585.00**
F19379	Replacement Pump	5	**571.00**

ACCESSORIES

F296

Replacement thermostatic sensor cartridges.
Sensor cartridge accuracy: ±4ºF.
By-pass from boiler complete closing temperature: Tset +18°F (130°+18°=148°F).

Fits 280 and 281 series boiler protection valves.
Easy replacement to change the 280 valve set temperature without removing the valve body from the piping.

Code	Description	Lbs	USD
F29633	115ºF Tset	0.2	**44.30**
F29634	130ºF Tset	0.2	**44.30**
F29635	140ºF Tset	0.2	**44.30**
F29636	160ºF Tset	0.2	**44.30**

Selection note: thermostatic sensor cartridge will completely close at Tset value +18°F. Example: (130°F Tset +18°F=148°F completely closed) ±4°F.

ACCESSORIES

F295

Dual scale temperature gauge 280 and 281 series boiler protection valves.

Code	Description	Lbs	USD
F29571	32—250ºF	0.2	**37.60**

HEAT METERS

This diagram is for illustration purposes only

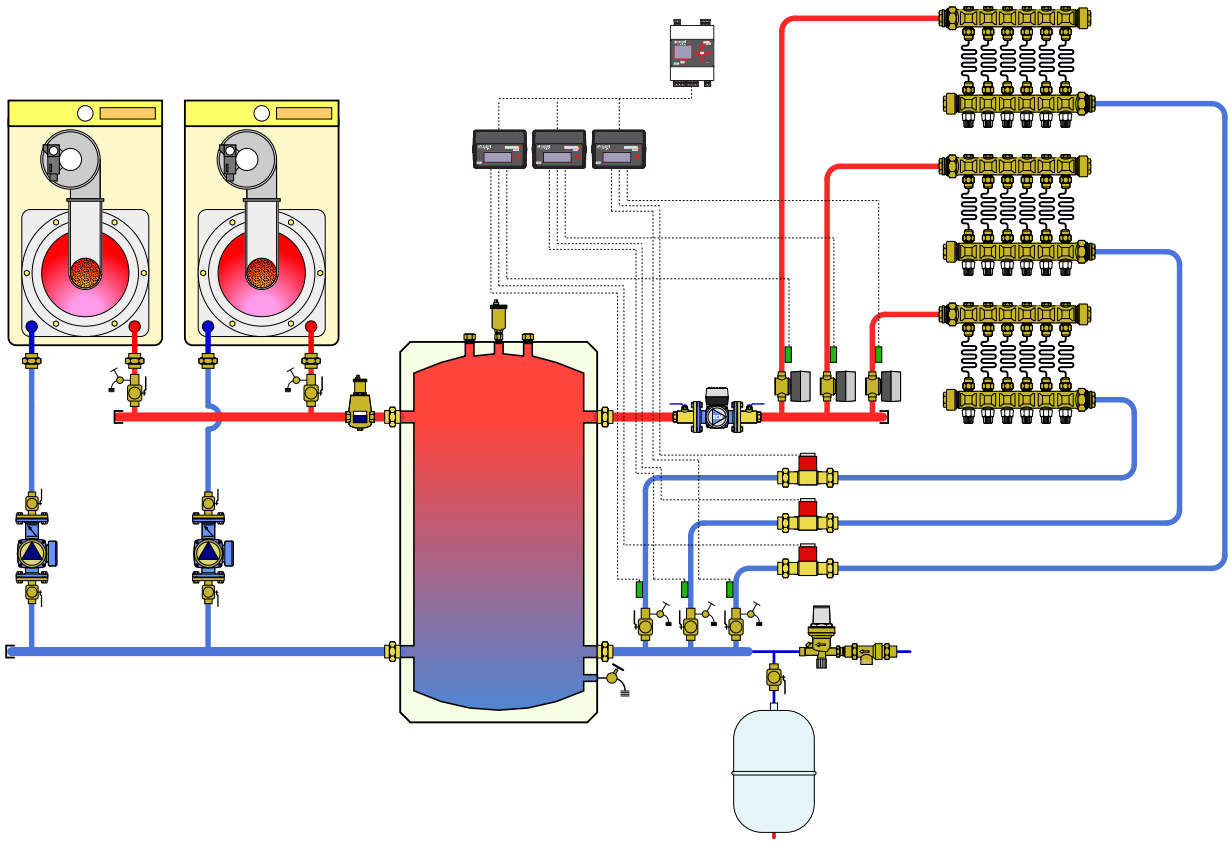

PRODUCTS INCLUDED IN SECTION

- Heat meters
- Heat meters accessories

HEAT METERS

NEW

Code	Description	Lbs	USD
750449A	Heat Meter, 0.25 to 10 GPM, 1/2" sweat	6.2	**1,580.00**
750440A	Heat Meter, 0.25 to 10 GPM, 1/2" MNPT	6.2	**1,640.00**
750446A	Heat Meter, 0.25 to 10 GPM, 1/2" press	6.2	**1,720.00**
750459A	Heat Meter, 0.25 to 10 GPM, 3/4" sweat	7.1	**1,600.00**
750450A	Heat Meter, 0.25 to 10 GPM, 3/4" MNPT	7.1	**1,660.00**
750456A	Heat Meter, 0.25 to 10 GPM, 3/4" press	7.1	**1,740.00**
750469A	Heat Meter, 0.25 to 10 GPM, 1" sweat	7.9	**1,680.00**
750460A	Heat Meter, 0.25 to 10 GPM, 1" MNPT	7.9	**1,740.00**
750466A	Heat Meter, 0.25 to 10 GPM, 1" press	7.9	**1,820.00**
750463A	Heat Meter, 0.3 to 15 GPM, 1" FNPT	11.5	**2,340.00**
750473A	Heat Meter, 0.5 to 25 GPM, 1-1/4" FNPT	12.1	**2,500.00**
750483A	Heat Meter, 1 to 45 GPM, 1-1/2" FNPT	18.7	**2,900.00**

Standard installation

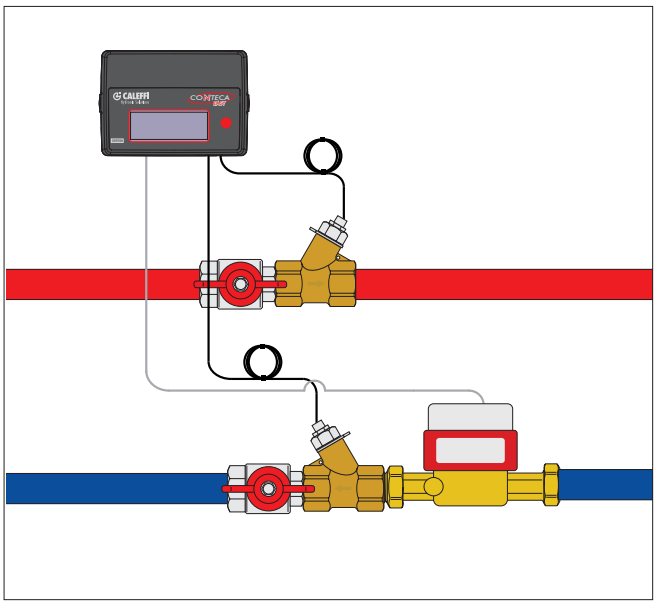

7504
CONTECA™ Heat meter

CONTECA™ is a direct heat meter designed to measure instantaneous and recorded history of thermal energy usage in residential and commercial buildings.

Micro processor:
Power supply: 24 VAC, 50/60 Hz, 1W.
Data transmission: 2-wire RS485; selectable Modbus or M-bus (for use with Datalogger).
Ambient temperature: 40 — 113°F (4— 45°C).
Environmental rating: NEMA 3S (IP 54).
Pulse inputs: Class 1B per EN 1434-2.

Temperature sensors:
Cable length: 26¼ feet (8 m).
Sensor type: 100 kohm NTC matched.
Temperature sensitivity: < 0.1°F.

Flow meters:
Body material: Brass.
Body threads: ISO 228 male straight.
Piping connections: Dual unions, tailpieces NPT, sweat, press.
Max. working pressure: 150 psi (10 bar)

Function

The CONTECA™ meter features an 8-digit liquid crystal display that enables easy reading of BTU consumed as well as a range of technical data indicating equipment operating status and data logging.

Each CONTECA™ includes an electronic calculator/user interface, two temperature sensors, fittings included. The flow meter comes with the CONTECA™ meter kit. In addition to the two temperature inputs and flow meter input, 4 additional pulse inputs, for optional equipment monitoring and data logging. The CONTECA™ is easy to install and commission, and complies with ASTM E3137 specification for heat metering instrumentation and European directive 2014/32/UE EN 1434 (MI 004).

The meter has integral RS485 Modbus protocol 2-wire communication (default) for remote access and configuration when BAS is Modbus. The RS485 protocol must be changed to M-bus when using the Datalogger. Up to 250 CONTECA™ meters can connect to one CONTECA® data logger.

Lead seals (included with each kit) to prevent tampering

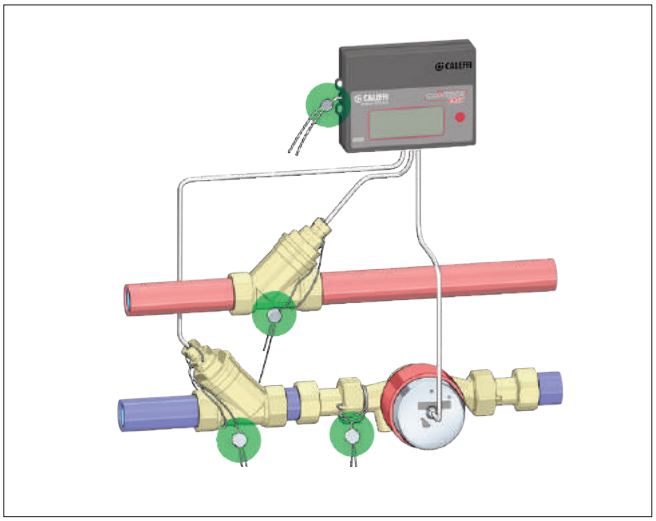

HEAT METERS

7504 CONTECA™ Datalogger

Power supply: 24 V (dc) ±10%, 24 V (ac) - 3 W.
2 Ethernet ports: ETH1 (PoE), ETH2.
Ambient temperature range: 32—122°F.
Mounting: on a 35 mm DIN rail (EN 60715).
Daily data logging: 10 years.
Reports: In XLS or CSV format.

Code	Description	Lbs	USD
750450	Conteca Datalogger	2.0	**3,661.00**

Modbus-to-BACnet gateway.
Converts CONTECA™ controller Modbus (RS-485 serial) output communication to BACnet IP or MSTP communication.

Code	Description	Lbs	USD
NA10520	Modbus-to-BACnet gateway	1.0	**2,900.00**

Wall transformer.
Input voltage: 120 V AC.
Output voltage: 24 V AC.
Power output: 40 VA.
Agency approval: cULus.

Code	Description	Lbs	USD
NA605010	24 V AC wall transformer	1.0	**51.70**

V40 Replacement

Single jet rotary pulse flow meter measures liquid flow for energy heat metering production or consumption. Accurate to International Standards OIML R75, EN1434 and MID.
Brass body.
Sweat connections included.
Working temperature range: -40—210ºF.
Max. fluid temperature: 265ºF
Max. working pressure: 235 psi.
Maximum glycol: 50%.

Code	Description	Lbs	USD
NA79701	¼—10 gpm, ¾" sweat	3.0	**730.00**

V40 Replacement

Multi-jet rotary pulse flow meter measures liquid flow for energy heat metering production or consumption.
Accurate to International Standards OIML R75, EN1434 and MID.
Brass body.
Sweat connections included.
Working temperature range: -40—210ºF.
Max. fluid temperature: 265ºF.
Max. working pressure: 235 psi.
Maximum glycol: 50%.

Code	Description	Lbs	USD
NA79702	½—15 gpm, 1" sweat	5.0	**1,289.00**
NA79703	½—25 gpm, 1¼" sweat	8.0	**1,514.00**
NA79704	1—45 gpm, 1½" sweat	14	**1,849.00**

Diagram

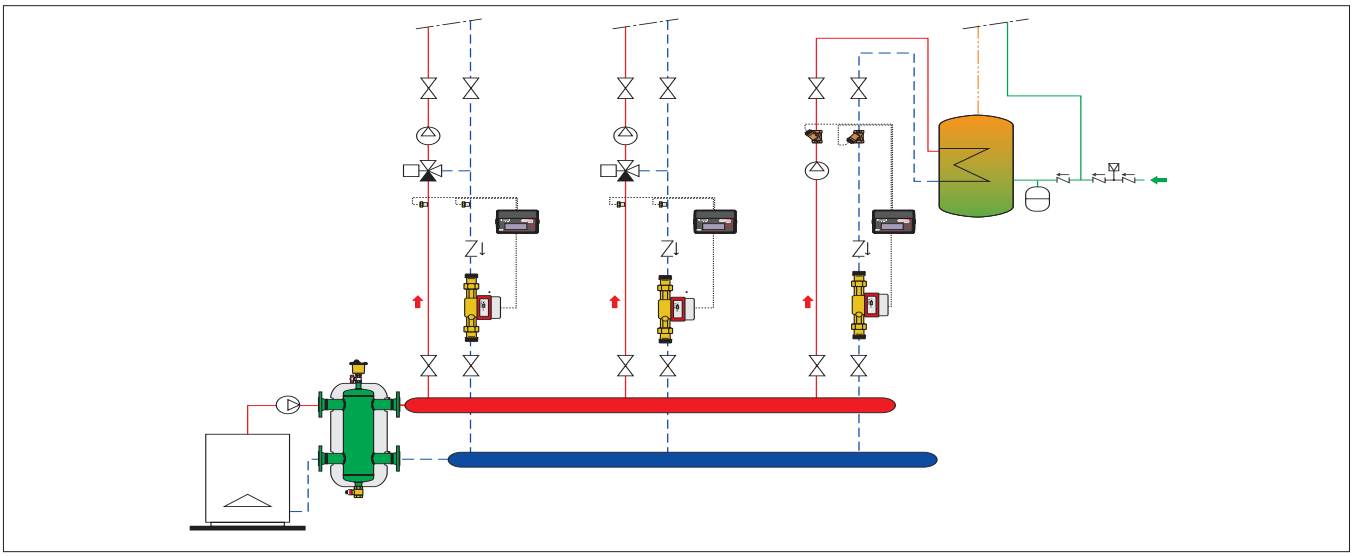

Code	USD	Page(s)
100001A	23.20	79
110050A	43.50	110
110060A	47.70	110
1107B5LA	1,336.00	110
1107B5RA	1,336.00	110
1107C5LA	1,475.00	110
1107C5RA	1,475.00	110
1107D5LA	1,623.00	110
1107D5RA	1,623.00	110
1107E5LA	1,761.00	110
1107E5RA	1,761.00	110
1107F5LA	1,899.00	110
1107F5RA	1,899.00	110
1107G5LA	2,069.00	110
1107G5RA	2,069.00	110
1107H5LA	2,207.00	110
1107H5RA	2,207.00	110
112001	57.60	72
116000	93.60	77
116010	20.80	77
116140A	308.00	76
116140AC	370.00	76
116141A	329.00	76
116141AC	391.00	76
116150A	331.00	76
116150AC	404.00	76
116151A	352.00	76
116151AC	424.00	76
116240A	401.00	76
116240AC	464.00	76
116250A	424.00	76
116250AC	497.00	76
116340A	422.00	76
116340AC	485.00	76
116350A	445.00	76
116350AC	518.00	76
120141A 000	186.00	79
120149A 000	177.00	79
120151A 000	188.00	79
120159A 000	180.00	79
120161A 000	372.00	79
120169A 000	355.00	79
120171A 000	423.00	79
120179A 000	404.00	79
120341A 000	202.00	79
120349A 000	192.00	79
120351A 000	204.00	79
120359A 000	194.00	79
120361A 000	388.00	79
120369A 000	369.00	79
120371A 000	439.00	79
120379A 000	418.00	79
121141A ***	205.00	78
121149A ***	196.00	78
121151A ***	208.00	78
121159A ***	198.00	78
121161A ***	423.00	78
121169A ***	404.00	78
121171A ***	475.00	78
121179A ***	452.00	78
121341A ***	220.00	78
121349A ***	210.00	78
121351A ***	224.00	78
121359A ***	212.00	78
121361A ***	439.00	78
121369A ***	418.00	78
121371A ***	490.00	78
121379A ***	467.00	78
127140AFC ***	208.00	74
127141AFC ***	156.00	74
127142AFC ***	154.00	74
127143AFC ***	205.00	74
127144AFC ***	154.00	74
127145AFC ***	205.00	74
127146AFC ***	166.00	74
127147AFC ***	218.00	74

Code	USD	Page(s)
127148AFC ***	205.00	74
127149AFC ***	154.00	74
127150AFC ***	250.00	74
127151AFC ***	166.00	74
127152AFC ***	168.00	74
127153AFC ***	220.00	74
127154AFC ***	168.00	74
127155AFC ***	220.00	74
127156AFC ***	192.00	74
127157AFC ***	243.00	74
127158AFC ***	220.00	74
127159AFC ***	168.00	74
127160AFC ***	260.00	74
127161AFC ***	208.00	74
127162AFC ***	206.00	74
127163AFC ***	257.00	74
127164AFC ***	206.00	74
127165AFC ***	257.00	74
127166AFC ***	218.00	74
127167AFC ***	270.00	74
127168AFC ***	257.00	74
127169AFC ***	206.00	74
127341AF ***	149.00	74
127342AF ***	141.00	74
127346AF ***	164.00	74
127349AF ***	141.00	74
127351AF ***	155.00	74
127352AF ***	148.00	74
127356AF ***	180.00	74
127359AF ***	148.00	74
127361AF ***	178.00	74
127362AF ***	170.00	74
127366AF ***	223.00	74
127369AF ***	170.00	74
130400A	205.00	75
130500A	222.00	75
130600A	266.00	75
130700A	333.00	75
130800A	416.00	75
130900A	554.00	75
132060A	1,728.00	73
132080A	2,305.00	73
132100A	3,519.00	73
132432A	289.00	73
132432AFC	365.00	72
132433AFC	417.00	72
132434AFC	365.00	72
132435AFC	417.00	72
132438AFC	417.00	72
132439AFC	365.00	72
132452AFC	365.00	72
132453AFC	417.00	72
132454AFC	365.00	72
132455AFC	417.00	72
132458AFC	417.00	72
132459AFC	365.00	72
132532AFC	380.00	72
132533AFC	433.00	72
132534AFC	380.00	72
132535AFC	433.00	72
132536AFC	404.00	72
132537AFC	457.00	72
132538AFC	433.00	72
132539AFC	380.00	72
132552A	311.00	73,110
132552AFC	380.00	72
132553AFC	433.00	72
132554AFC	380.00	72
132555AFC	433.00	72
132556AFC	404.00	72
132557AFC	457.00	72
132558AFC	433.00	72
132559AFC	380.00	72
132637	289.00	72
132657	304.00	72
132632AFC	439.00	72

Code	USD	Page(s)
132633AFC	492.00	72
132634AFC	439.00	72
132635AFC	492.00	72
132638AFC	470.00	72
132639AFC	418.00	72
132652AFC	439.00	72
132653AFC	492.00	72
132654AFC	439.00	72
132655AFC	492.00	72
132658AFC	470.00	72
132659AFC	418.00	72
132662A	363.00	73,110
132772A	482.00	73,110
132882A	571.00	73,110
132992A	700.00	73,110
142241A	160.00	75
142251A	171.00	75
142261A	232.00	75
142271A	331.00	75
142281A	371.00	75
142291A	475.00	75
165001	87.90	50
165600A	1,575.00	50
165602A	1,923.00	50
165610A	1,575.00	50
165612A	1,923.00	50
166600A	1,923.00	51
166602A	2,272.00	51
166610A	1,923.00	51
166612A	2,272.00	51
167600A	2,272.00	51
167602A	2,621.00	51
167610A	2,272.00	51
167612A	2,621.00	51
1725C1A	1,835.00	52
1725C1A IN	1,835.00	52
1725C1AHE	2,202.00	52
1725C1AHE IN	2,202.00	52
1725D1A	1,953.00	52
1725D1A IN	1,953.00	52
1725D1AHE	2,320.00	52
1725D1AHE IN	2,320.00	52
1725E1A	2,071.00	52
1725E1A IN	2,071.00	52
1725E1AHE	2,438.00	52
1725E1AHE IN	2,438.00	52
1725F1A	2,189.00	52
1725F1A IN	2,189.00	52
1725F1AHE	2,556.00	52
1725F1AHE IN	2,556.00	52
1725G1A	2,309.00	52
1725G1A IN	2,309.00	52
1725G1AHE	2,674.00	52
1725G1AHE IN	2,674.00	52
1725H1A	2,426.00	52
1725H1A IN	2,426.00	52
1725H1AHE	2,792.00	52
1725H1AHE IN	2,792.00	52
1725I1A	2,545.00	52
1725I1A IN	2,545.00	52
1725I1AHE	2,911.00	52
1725I1AHE IN	2,911.00	52
1725L1A	2,663.00	52
1725L1A IN	2,663.00	52
1725L1AHE	3,030.00	52
1725L1AHE IN	3,030.00	52
1725M1A	2,780.00	52
1725M1A IN	2,780.00	52
1725M1AHE	3,147.00	52
1725M1AHE IN	3,147.00	52
1725N1A	2,900.00	52
1725N1A IN	2,900.00	52
1725N1AHE	3,267.00	52
1725N1AHE IN	3,267.00	52
1725O1A	3,017.00	52
1725O1A IN	3,017.00	52

Code	USD	Page(s)
1725O1AHE	3,384.00	52
1725O1AHE IN	3,384.00	52
200000	82.80	36
201000	148.00	36
203502	281.00	36
220400A	81.20	37
220500A	89.00	37
221400A	81.20	37
221500A	89.00	37
250041A	87.30	109
251003A	232.00	108
251004A	175.00	109
252149A	281.00	108
252158A	363.00	108
252159A	295.00	108
252168A	413.00	108
252169A	342.00	108
253040	86.90	108
253042	86.90	108
253043	86.90	108
253044	86.90	108
253046	86.90	108
253048	86.90	108
255007	222.00	104
259012	190.00	104
259018	237.00	104
259025	307.00	104
259033	523.00	104
259050	659.00	104
278011	70.90	106
278751	978.00	106
278751A	1,270.00	106
278951A	1,356.00	107
279051	1,164.00	106
279051A	1,455.00	106
280165A	468.00	111
280166A	468.00	111
280175A	538.00	111
280176A	538.00	111
280965A	438.00	111
280966A	438.00	111
280975A	516.00	111
280976A	516.00	111
281165A	1,441.00	111
281166A	1,441.00	111
281175A	1,657.00	111
281176A	1,657.00	111
281965A	1,347.00	111
281966A	1,347.00	111
281975A	1,585.00	111
281976A	1,585.00	111
301040	68.40	38
301140	68.40	38
301241	120.00	38
301341	120.00	38
31401 FD	56.50	97
31403 FD	93.20	97
31426 FD	111.00	97
31428 FD	145.00	97
31553 FD	25.00	97
31554 FD	50.00	96
31554 FD	50.00	96
31901A	20.20	95
31970A	20.00	97
337221A	15.20	23
338452	85.30	37
339452	92.00	37
342452	56.20	37
343452	58.90	37
386500	13.80	57
387100	65.80	39,57
387127	119.00	37
39623	20.70	84
41371A	81.40	96
41372A	105.00	96
41380A	20.00	97

Code	USD	Page(s)
41787 CST	49.30	96
41788 CST	78.10	96
41789 CST	101.00	96
41882A	88.10	97
437516	11.90	39
449000	13.90	59
449010	17.10	36
449900	5.90	38
472000	283.00	36
49684A	459.00	19
49685A	663.00	33
501502A	448.00	19,22
502015A	25.10	22
502040A	25.10	22
502043 CST	35.40	59
502043A	35.40	19
502043A	35.40	19
502113A	39.00	22
502115A	33.80	22
502243A	60.70	22
502343A	71.80	19,22
502630	31.30	23
502640	33.80	23
502610A	22.50	23
502620A	23.50	23
502710A	31.20	23
502720A	32.90	23
508013A	12.30	23
508100A	10.60	23
519006	99.00	51
519502A	186.00	100
519566A	211.00	100
519599A	184.00	100
519600A	289.00	100
519609A	289.00	100
519700A	347.00	100
519709A	347.00	100
520051A	213.00	63,69
520500AX	394.00	69
520506AX	451.00	69
520509AX	382.00	69
520510AX	451.00	69
520516A	353.00	63
520516AC	422.00	63
520516AX	506.00	69
520519A	339.00	63
520519AC	380.00	63
520519AX	437.00	69
521101A	213.00	62
521301A	198.00	65
521333A	244.00	65
521342A	301.00	65
521347A	287.00	65
521348A	287.00	65
521349A	287.00	65
521352A	313.00	65
521357A	301.00	65
521358A	301.00	65
521359A	301.00	65
521362A	372.00	65
521367A	359.00	65
521368A	359.00	65
521369A	359.00	65
521400A	288.00	62
521400AC	316.00	62
521406A	293.00	62
521407A	275.00	62
521407AC	304.00	62
521408A	275.00	62
521408AC	304.00	62
521409A	275.00	62
521409AC	304.00	62
521410A	339.00	62
521410AC	367.00	62
521416A	344.00	62
521417A	327.00	62

Code	USD	Page(s)
521417AC	355.00	62
521418A	327.00	62
521418AC	355.00	62
521419A	327.00	62
521419AC	355.00	62
521500A	301.00	62
521500AC	341.00	62
521506A	301.00	62
521506AC	371.00	62
521507A	287.00	62
521507AC	329.00	62
521508A	287.00	62
521508AC	329.00	62
521509A	287.00	62
521509AC	329.00	62
521510A	352.00	62
521510AC	393.00	62
521516A	353.00	62
521516AC	422.00	62
521517A	339.00	62
521517AC	380.00	62
521518A	339.00	62
521518AC	380.00	62
521519A	339.00	62
521519AC	380.00	62
521600A	357.00	62
521600AC	397.00	62
521606A	363.00	62
521607A	342.00	62
521607AC	384.00	62
521608A	342.00	62
521608AC	384.00	62
521609A	342.00	62
521609AC	384.00	62
521610A	408.00	62
521610AC	449.00	62
521616A	415.00	62
521617A	394.00	62
521617AC	435.00	62
521618A	394.00	62
521618AC	435.00	62
521619A	394.00	62
521619AC	435.00	62
523160A	1,571.00	64
523166A	1,655.00	64
523168A	1,556.00	64
523170A	1,700.00	64
523176A	1,730.00	64
523177A	1,748.00	64
523178A	1,625.00	64
523179A	1,400.00	64
523180A	2,504.00	64
523186A	2,663.00	64
523188A	2,444.00	64
523190A	2,636.00	64
523196A	2,960.00	64
523198A	2,570.00	64
523199A	2,000.00	64
533000H	78.00	83
533340HA	155.00	83
533341HA	175.00	83
533350HA	166.00	83
533351HA	186.00	83
533449HA	120.00	83
533459HA	127.00	83
533650HA	161.00	83
533651HA	181.00	83
533750HA	154.00	83
533751HA	174.00	83
533850HA	154.00	83
533851HA	174.00	83
533940HA	141.00	83
533941HA	161.00	83
533950HA	154.00	83
533951HA	174.00	83
535004	81.40	91

Code	USD	Page(s)
535006HA	97.60	82
535009HA	300.00	82
535051A	224.00	91
535056A	230.00	91
535057A	220.00	91
535058A	220.00	91
535059A	220.00	91
535061A	237.00	91
535066A	249.00	91
535067A	239.00	91
535068A	239.00	91
535069A	235.00	91
535340HA	193.00	82
535341HA	212.00	82
535350HA	208.00	82
535351HA	227.00	82
535360HA	271.00	82
535361HA	290.00	82
535370HA	577.00	82
535371HA	596.00	82
535380HA	832.00	82
535381HA	851.00	82
535390HA	1,021.00	82
535391HA	1,041.00	82
535550HA	192.00	82
535551HA	211.00	82
535650HA	201.00	82
535651HA	220.00	82
535660HA	296.00	82
535661HA	316.00	82
535750HA	192.00	82
535751HA	211.00	82
535760HA	255.00	82
535761HA	274.00	82
535840HA	135.00	82
535850HA	142.00	82
535860HA	187.00	82
535870HA	411.00	82
535880HA	578.00	82
535890HA	672.00	82
535940HA	177.00	82
535941HA	197.00	82
535950A	162.00	91
535950HA	192.00	82
535951HA	211.00	82
535960HA	255.00	82
535961HA	274.00	82
535970HA	563.00	82
535971HA	581.00	82
535980HA	788.00	82
535981HA	807.00	82
535990HA	1,025.00	82
535991HA	1,045.00	82
538202 FD	21.10	100
538402 FD	21.50	19,30,100
546016A	539.00	28
546050A	4,086.00	28
546060A	4,306.00	28
546080A	5,547.00	28
546096A	513.00	28
546097A	612.00	28
546100A	6,081.00	28
546108A	1,918.00	28
546109A	2,026.00	28
546116A	659.00	28
546120A	8,772.00	28
546150A	10,702.00	28
546168A	2,128.00	28
546169A	2,372.00	28
546196A	632.00	28
546197A	752.00	28
546198A	1,863.00	28
546199A	1,952.00	28
546205A	270.00	30
546206A	298.00	30
546207A	435.00	30

Code	USD	Page(s)
546208A	564.00	30
546209A	692.00	30
546228A	284.00	30
546235A	414.00	30
546241A	537.00	30
546254A	659.00	30
546266A	343.00	30
546267A	528.00	30
546306A	359.00	30
546307A	524.00	30
546308A	683.00	30
546309A	824.00	30
546328A	342.00	30
546335A	499.00	30
546341A	651.00	30
546354A	794.00	30
546366A	390.00	30
546367A	597.00	30
546368A	781.00	30
546369A	953.00	30
546510AM	4,290.00	32
546550AM	2,666.00	32
546560A	2,294.00	30
546560AM	2,869.00	32
546580AM	3,879.00	32
548006 US	800.00	17
548006A	1,064.00	17
548007 US	900.00	17
548007A	1,276.00	17
548008 US	1,000.00	17
548008A	1,672.00	17
548009 US	1,100.00	17
548009A	1,948.00	17
548052A	4,136.00	17
548062A	4,407.00	17
548066A	1,140.00	17
548067A	1,452.00	17
548068A	1,884.00	17
548069A	2,380.00	17
548082A	5,513.00	17
548096A	1,008.00	17
548097A	1,216.00	17
548098A	1,592.00	17
548099A	1,860.00	17
548102A	6,170.00	17
549506US	1,200.00	16
549506A	1,464.00	16
549507US	1,400.00	16
549507A	1,776.00	16
549508US	1,650.00	16
549508A	2,322.00	16
549509US	2,000.00	16
549509A	2,636.00	16
549510A	9,350.00	16
549552A	6,261.00	16
549562A	6,672.00	16
549566A	1,540.00	16
549567A	1,952.00	16
549568A	2,534.00	16
549569A	2,960.00	16
549582A	8,349.00	16
549596A	1,408.00	16
549597A	1,716.00	16
549598A	2,242.00	16
549599A	2,570.00	16
551003A	198.00	25
551003AC	209.00	25
551004A	138.00	23
551005A	297.00	24
551005AC	309.00	24
551006A	319.00	24
551006AC	331.00	24
551007A	467.00	24
551007AC	477.00	24
551008A	607.00	24
551008AC	619.00	24

Code	USD	Page(s)
551009A	742.00	24
551009AC	752.00	24
551022A	190.00	25
551022AC	203.00	25
551028A	305.00	24
551028AC	315.00	24
551035A	444.00	24
551035AC	456.00	24
551041A	578.00	24
551041AC	590.00	24
551050A	3,217.00	26
551050AT	3,060.00	26
551054A	706.00	24
551054AC	717.00	24
551060A	3,440.00	26
551060AT	3,282.00	26
551066A	364.00	24
551066AC	374.00	24
551067A	560.00	24
551067AC	571.00	24
551068A	724.00	24
551068AC	737.00	24
551069A	883.00	24
551069AC	896.00	24
551080A	4,554.00	26
551100A	5,095.00	26
551120A	7,414.00	26
551150A	9,553.00	26
551716	344.00	25
551705A	378.00	25
551706A	400.00	25
551765A	396.00	25
551766A	443.00	25
551795A	372.00	25
551796A	394.00	25
553542A	173.00	90
553549A	164.00	66
553642A	194.00	66
553649A	186.00	66
559920A	1,325.00	18
559921A	1,362.00	18
559922A	1,628.00	18
559931A	1,956.00	18
561402A	21.60	23,25
562100	28.10	33
573002A	295.00	90
573006A	328.00	90
573007A	312.00	90
573009A	282.00	90
573012A	318.00	90
573016A	354.00	90
573017A	336.00	90
573019A	304.00	90
573100A	98.80	84
573403A	134.00	84
573406A	163.00	84
573409A	128.00	84
573493A	131.00	84
573503A	141.00	84
574002A	682.00	90
574004A	520.00	84
574006A	713.00	90
574007A	698.00	90
574012A	703.00	90
574016A	734.00	90
574017A	719.00	90
574050A	624.00	84
574056A	676.00	84
574064A	551.00	84
574151A	833.00	91
574156A	885.00	91
574157A	859.00	91
586600	17.10	99
59469	83.20	84
59470	88.10	84
59471	175.00	84

Code	USD	Page(s)
59472	62.30	84
59474A	17.50	23
59756	202.00	33
59804A	18.80	23
59817A	45.30	95
59829	172.00	33
59834A	40.70	95
59840A	40.80	95
59893A	30.10	95
59894A	65.80	95
59904A	25.90	95
59905A	36.60	95
59906A	61.40	95
59977	32.30	84
59978	57.80	84
59979	37.30	84
59980	14.00	84
600064A	4,171.00	66
600066A	4,255.00	66
600066AS	12,680.00	67
600069A	4,156.00	66
600074A	4,300.00	66
600076A	4,330.00	66
600076AS	14,410.00	67
600079A	4,225.00	66
600084A	4,854.00	66
600086A	5,013.00	66
600086AS	18,236.00	67
600089A	4,794.00	66
600094A	4,986.00	66
600096A	5,310.00	66
600096AS	20,700.00	67
600099A	4,920.00	66
61215A	30.30	99
626009	33.80	101
626600A	361.00	101
644004	265.00	47
644250A	450.00	47
644256A	450.00	47
644259A	442.00	47
644260A	488.00	47
644266A	492.00	47
644269A	478.00	47
644350A	486.00	47
644350A 3BY	486.00	47
644356A	512.00	47
644356A 3BY	512.00	47
644359A	498.00	47
644359A 3BY	498.00	47
644360A	567.00	47
644360A 3BY	567.00	47
644366A	574.00	47
644366A 3BY	574.00	47
644369A	553.00	47
644369A 3BY	553.00	47
645114	650.00	67
656344	153.00	42
656344	153.00	42
656344	153.00	42
656354	181.00	42
656354	181.00	42
656354	181.00	42
656354R	198.00	58
656404	114.00	36
656404	114.00	36
656404	114.00	36
656404	114.00	36
656414	144.00	36
656414	144.00	36
656414	144.00	36
656414	144.00	36
659044	447.00	56
659064	487.00	56
659084	573.00	56
659104	659.00	56
659124	745.00	56

Code	USD	Page(s)
6636C5A	693.00	55
6636C5A IN	693.00	55
6636D5A	801.00	55
6636D5A IN	801.00	55
6636E5A	908.00	55
6636E5A IN	908.00	55
6636F5A	1,015.00	55
6636F5A IN	1,015.00	55
6636G5A	1,123.00	55
6636G5A IN	1,123.00	55
6636H5A	1,231.00	55
6636H5A IN	1,231.00	55
6636I5A	1,338.00	55
6636I5A IN	1,338.00	55
6636L5A	1,447.00	55
6636L5A IN	1,447.00	55
6636M5A	1,554.00	55
6636M5A IN	1,554.00	55
6636N5A	1,661.00	55
6636N5A IN	1,661.00	55
6636O5A	1,769.00	55
6636O5A IN	1,769.00	55
6636P5A	2,078.00	55
6636P5A IN	2,078.00	55
6637C5A	738.00	55
6637C5A IN	738.00	55
6637D5A	844.00	55
6637D5A IN	844.00	55
6637E5A	953.00	55
6637E5A IN	953.00	55
6637F5A	1,061.00	55
6637F5A IN	1,061.00	55
6637G5A	1,168.00	55
6637G5A IN	1,168.00	55
6637H5A	1,276.00	55
6637H5A IN	1,276.00	55
6637I5A	1,383.00	55
6637I5A IN	1,383.00	55
6637L5A	1,491.00	55
6637L5A IN	1,491.00	55
6637M5A	1,598.00	55
6637M5A IN	1,598.00	55
6637N5A	1,707.00	55
6637N5A IN	1,707.00	55
6637O5A	1,815.00	55
6637O5A IN	1,815.00	55
6637P5A	2,132.00	55
6637P5A IN	2,132.00	55
668000	131.00	58
6686C5S1A	847.00	54
6686C5S1A IN	847.00	54
6686D5S1A	970.00	54
6686D5S1A IN	970.00	54
6686E5S1A	1,093.00	54
6686E5S1A IN	1,093.00	54
6686F5S1A	1,216.00	54
6686F5S1A IN	1,216.00	54
6686G5S1A	1,338.00	54
6686G5S1A IN	1,338.00	54
6686H5S1A	1,462.00	54
6686H5S1A IN	1,462.00	54
6686I5S1A	1,585.00	54
6686I5S1A IN	1,585.00	54
6686L5S1A	1,708.00	54
6686L5S1A IN	1,708.00	54
6686M5S1A	1,831.00	54
6686M5S1A IN	1,831.00	54
6686N5S1A	1,954.00	54
6686N5S1A IN	1,954.00	54
6686O5S1A	2,078.00	54
6686O5S1A IN	2,078.00	54
6687C5S1A	898.00	54
6687C5S1A IN	898.00	54
6687D5S1A	1,021.00	54
6687D5S1A IN	1,021.00	54
6687E5S1A	1,145.00	54

Code	USD	Page(s)
6687E5S1A IN	1,145.00	54
6687F5S1A	1,266.00	54
6687F5S1A IN	1,266.00	54
6687G5S1A	1,389.00	54
6687G5S1A IN	1,389.00	54
6687H5S1A	1,513.00	54
6687H5S1A IN	1,513.00	54
6687I5S1A	1,636.00	54
6687I5S1A IN	1,636.00	54
6687L5S1A	1,759.00	54
6687L5S1A IN	1,759.00	54
6687M5S1A	1,881.00	54
6687M5S1A IN	1,881.00	54
6687N5S1A	2,005.00	54
6687N5S1A IN	2,005.00	54
6687O5S1A	2,128.00	54
6687O5S1A IN	2,128.00	54
669050	47.40	59
675900A	15.00	59
676000A	38.80	42
676256A	282.00	42
676258A	272.00	42
676259A	272.00	42
676266A	323.00	42
676268A	310.00	42
676269A	310.00	42
676500A	82.80	42
676756A	322.00	42
676758A	313.00	42
676759A	313.00	42
676766A	363.00	42
676768A	350.00	42
676769A	350.00	42
680507	13.80	57
680503A	13.80	57
680504A	13.80	57
680505A	13.80	57
680555A	13.80	57
681524	14.50	39
681555	14.50	39
681503A	14.50	39
682530A	14.20	57
682540A	14.20	39
682540A	14.20	39
682545A	15.30	57
682550A	27.00	57
687000	29.40	110
688003A	55.80	59,63,64,100
69122 CST	17.90	59
694045	27.20	19
750450	3,520.00	115
750405A	1,500.00	114
750440A	1,640.00	114
750446A	1,720.00	114
750449A	1,580.00	114
750450A	1,660.00	114
750456A	1,740.00	114
750459A	1,600.00	114
750460A	1,740.00	114
750463A	2,340.00	114
750466A	1,820.00	114
750469A	1,680.00	114
750473A	2,500.00	114
750483A	2,900.00	114
861527A CST	26.50	110
861634A CST	42.40	110
863027	31.80	110
863034	46.70	110
940451	26.20	39
942550	17.20	57
CBN116140	49.90	77
CBN130400	45.10	75
CBN130500	48.80	75
CBN130600	58.60	75
CBN130700	73.20	75
CBN130800	91.40	75

Code	USD	Page(s)
CBN130900	122.00	75
CBN142241A	41.30	75
CBN142251A	43.90	75
CBN142261A	59.80	75
CBN142271A	85.20	75
CBN142281A	95.80	75
CBN546002	128.00	28
CBN546118	161.00	28
CBN546119	184.00	28
CBN546205	81.40	30
CBN546207	87.30	30
CBN546209	95.50	30
CBN551005	81.40	25
CBN551007	87.30	25
CBN551009	95.50	25
F0000349	867.00	19
F0000435	204.00	19
F0000492	11.80	96
F0000520	15.90	96
F0000521	34.20	96
F0000580	72.80	77
F0000698	8.80	96
F0000718	23.50	96
F0000926	58.20	72
F0000940	160.00	72
F0000940	160.00	72
F0000941	160.00	72
F0000941	160.00	72
F0000942	160.00	73
F0000943	168.00	73
F0000944	168.00	73
F0000945	168.00	73
F0000946	177.00	73
F0000947	177.00	73
F0000948	177.00	73
F0000962	2,600.00	67
F0001007	11.80	96
F0001008	15.90	96
F0001009	34.20	96
F19149	466.00	65
F19153	404.00	53
F19346	58.40	72,73,110
F19379	571.00	111
F29571	37.60	111
F29633	44.30	111
F29634	44.30	111
F29635	44.30	111
F29636	44.30	111
F29758	56.10	106
F29759	56.10	106
F31868	16.70	97
F36073	11.40	37
F39807	83.80	33
F41186	5.00	97,98
F41661A	166.00	30
F50055	2.30	19,95
F52429	5.50	62
F59650	51.00	90
F61008	6.30	96
F61008/C	7.50	96
F67037	1.20	59,100
F69184	28.00	59
F69293	24.30	45
F69294	24.30	45
F69590	32.10	59
F69600	40.20	59
NA10001	13.90	97
NA10002	11.80	95
NA10003	15.90	95
NA10005	12.00	43
NA10006	15.00	43
NA10007	24.60	43
NA10009	63.20	96
NA10038	359.00	53
NA10056	89.90	63
NA10058	98.70	63

Code	USD	Page(s)
NA10060	30.30	98
NA10061	31.60	98
NA10062	32.70	98
NA10064	34.00	99
NA10083	18.90	99
NA10087	30.50	99
NA10089	25.20	99
NA10103	288.00	105
NA10104	5.00	99
NA10118	30.30	98
NA10119	41.60	99
NA10160	14.40	104
NA10164	36.00	95
NA10165	42.30	95
NA10166	69.30	95
NA10167	26.00	100
NA10197	2.30	90
NA10204	30.30	33
NA10204	30.30	33
NA10204	30.30	33
NA10234	88.50	104
NA10236	23.70	99
NA10246	57.30	110
NA10247	71.00	110
NA10262	15.40	39
NA10262	15.40	39
NA10271	4.70	98
NA10272	58.20	98
NA10273	21.20	83
NA10273	21.20	83
NA10288	59.10	110
NA10295	122.00	100
NA10296	131.00	100
NA10302	3.50	95
NA10302	3.50	95
NA10313	16.60	39
NA10313	16.60	39
NA10315	198.00	64
NA10328	81.70	63
NA10342	17.20	46
NA10343	103.00	46
NA10358	51.30	63
NA10363	22.20	90
NA10366	87.30	64
NA10366	87.30	64
NA10367	215.00	64
NA10367	215.00	64
NA10403	31.30	95
NA10404	47.70	95
NA10405	3.30	62
NA10406	64.60	97
NA10407	96.90	97
NA10408	136.00	97
NA10409	222.00	97
NA10419	53.00	95
NA10419C	61.80	95
NA10425	36.50	19
NA10426	6.20	19
NA10461	391.00	64
NA10467	72.80	76
NA10469	62.40	76
NA10476	225.00	64
NA10479	3.10	62
NA10481	376.00	106
NA10484	25.90	96
NA10485	36.60	96
NA10486	54.90	96
NA10498	5.50	59
NA10498	5.50	59
NA10498	5.50	59
NA10512	173.00	68
NA10520	2,900.00	67
NA10520	2,900.00	67
NA10615	750.00	67
NA10616	1,100.00	67
NA10634	25.90	96

Code	USD	Page(s)
NA10635	36.60	96
Na10636	54.90	96
NA11304	22.80	82
NA11305	25.20	82
NA11306	27.00	82
NA11307	29.20	82
NA11308	31.50	82
NA11309	91.20	82
NA11338	89.40	89
NA12122	30.30	98
NA12123	37.80	98
NA12124	60.50	99
NA12152	32.30	98
NA12153	56.30	100
NA12154	61.90	100
NA12155	88.10	100
NA12156	54.10	105
NA12162	35.00	99
NA12169	599.00	105
NA12171	466.00	107
NA12172	30.30	98
NA12173	37.80	98
NA12249	41.00	79
NA12249	41.00	79
NA12259	49.20	79
NA12259	49.20	79
NA12269	85.90	79
NA12269	85.90	79
NA15029	61.80	104
NA15550	192.00	105
NA15559	156.00	105
NA15560	192.00	105
NA15569	158.00	105
NA15570	65.60	105
NA16002	729.00	53
NA16060	102.00	51
NA16069	90.40	51
NA16160	103.00	51
NA16169	91.40	51
NA16264	24.20	95
NA16265	26.70	95
NA16265L	61.00	95
NA16265LC	77.40	95
NA16266	47.50	95
NA16369	909.00	65
NA16469	1,153.00	65
NA17256	1,332.00	53
NA17256HE	1,699.00	53
NA20540	23.70	94
NA20543	28.80	94
NA20549	20.90	94
NA20640	24.80	94
NA20640C	38.70	94
NA20643	28.80	94
NA20646	26.50	94
NA20647	20.50	94
NA20647C	34.60	94
NA20648	20.50	94
NA20648C	34.60	94
NA20649	20.50	94
NA20649C	34.60	94
NA20650	28.80	94
NA20650C	49.40	94
NA20653	32.60	94
NA20656	29.00	94
NA20656C	64.20	94
NA20657	24.60	94
NA20657C	45.30	94
NA20658	24.60	94
NA20658C	45.30	94
NA20659	24.60	94
NA20659C	45.30	94
NA20660	47.60	94
NA20660C	68.20	94
NA20666	49.80	94
NA20667	43.00	94

Code	USD	Page(s)
NA20667C	63.60	94
NA20668	43.00	94
NA20668C	63.60	94
NA20669	43.00	94
NA20669C	63.60	94
NA20763	46.00	94
NA20766	55.20	94
NA20767	43.80	94
NA20769	33.80	94
NA20860	57.00	94
NA20863	51.40	94
NA20866	85.00	94
NA20866	85.00	94
NA20869	52.00	94
NA20870	100.00	94
NA20873	83.30	94
NA20876	110.00	94
NA20876	110.00	94
NA20879	75.00	94
NA20973	109.00	94
NA20976	150.00	94
NA20979	146.00	94
NA20983	127.00	94
NA20989	105.00	94
NA21083	119.00	94
NA21086	200.00	94
NA21089	152.00	94
NA21180	168.00	94
NA21186	221.00	94
NA21186	221.00	94
NA21189	148.00	94
NA21190	212.00	94
NA21193	175.00	94
NA21196	320.00	94
NA21196	320.00	94
NA21199	190.00	94
NA21293	184.00	94
NA21296	294.00	94
NA21299	217.00	94
NA223529	200.00	79
NA255002	123.00	104
NA25510	3,858.00	89
NA25510	3,858.00	89
NA255160	2,417.00	105
NA25540	32.70	104
NA25549	30.20	104
NA26640	64.70	106
NA26649	106.00	107
NA26650	70.00	106
NA26659	120.00	107
NA26660	135.00	106
NA26669	131.00	107
NA26711	759.00	107
NA26740	130.00	106
NA26749	213.00	107
NA26750	140.00	106
NA26759	239.00	107
NA26760	271.00	106
NA26769	261.00	107
NA29284	71.00	109
NA39588	101.00	19
NA39589	44.30	19
NA39753	60.40	19,26,33
NA502640A	72.80	85
NA502740A	42.60	23
NA503040	49.40	100
NA51059	82.50	100
NA51069	105.00	100
NA52367HL	4,455.00	68
NA545305	295.00	31
NA545306	340.00	31
NA545355	354.00	31
NA545356	413.00	31
NA545365	320.00	31
NA545366	385.00	31
NA545376	565.00	31

Code	USD	Page(s)
NA545395	293.00	31
NA545396	324.00	31
NA546050T	3,912.00	29
NA546050TM	4,523.00	29
NA546060A	5,264.00	29
NA546060AM	5,915.00	29
NA546080A	6,780.00	29
NA546080AM	7,695.00	29
NA546100A	7,432.00	29
NA546100AM	8,366.00	29
NA546120A	10,721.00	29
NA546120AM	11,753.00	29
NA546150A	13,080.00	29
NA546150AM	14,181.00	29
NA546200A	24,295.00	29
NA546200AM	27,821.00	29
NA546250A	37,355.00	29
NA546250AM	40,167.00	29
NA546300A	46,711.00	29
NA546300AM	50,897.00	29
NA546306T	555.00	31
NA546307T	707.00	31
NA546328T	540.00	31
NA546335T	684.00	31
NA546350A	59,066.00	29
NA546350AM	63,614.00	29
NA546366T	585.00	31
NA546367T	773.00	31
NA546510A	5,015.00	27
NA546510AM	5,697.00	32
NA546512A	7,230.00	27
NA546512AM	7,913.00	32
NA546515A	9,274.00	27
NA546515AM	9,956.00	32
NA546520A	18,963.00	27
NA546520AM	21,641.00	32
NA546525A	29,232.00	27
NA546525AM	31,910.00	32
NA546530A	36,204.00	27
NA546530AM	38,882.00	32
NA546535A	45,518.00	27
NA546535AM	48,195.00	32
NA546550A	3,308.00	27
NA546550AM	3,780.00	32
NA546560A	3,519.00	27
NA546560AM	3,991.00	32
NA546580A	4,582.00	27
NA546580AM	5,265.00	32
NA548052A	5,442.00	17
NA548062A	5,852.00	17
NA548082A	7,080.00	17
NA548102A	7,487.00	17
NA548120A	10,459.00	17
NA548150A	12,691.00	17
NA548200A	19,692.00	17
NA548250A	27,799.00	17
NA548300A	33,645.00	17
NA548350A	53,657.00	17
NA549052A	7,074.00	17
NA549052AM	7,288.00	16
NA549062A	7,609.00	17
NA549062AM	7,824.00	16
NA549082A	9,202.00	17

Code	USD	Page(s)
NA549082AM	9,684.00	16
NA549102A	9,730.00	17
NA549102AM	10,212.00	16
NA549120A	13,589.00	17
NA549120AM	14,071.00	16
NA549150A	16,488.00	17
NA549150AM	16,970.00	16
NA549200A	26,642.00	17
NA549200AM	29,373.00	16
NA549250A	37,065.00	17
NA549250AM	39,796.00	16
NA549300A	49,641.00	17
NA549300AM	52,372.00	16
NA549350A	59,012.00	17
NA549350AM	61,743.00	16
NA551050A	3,856.00	26
NA551060A	4,122.00	26
NA551080A	5,457.00	26
NA551100A	6,105.00	26
NA551120A	8,884.00	26
NA551150A	11,447.00	26
NA551200A	18,732.00	26
NA551250A	28,099.00	26
NA551300A	36,527.00	26
NA553362	826.00	91
NA553362R	1,316.00	91
NA553366	886.00	91
NA553366R	1,376.00	91
NA553369	809.00	91
NA553369R	1,299.00	91
NA553372	956.00	91
NA553372R	1,446.00	91
NA553376	1,065.00	91
NA553376R	1,555.00	91
NA553379	938.00	91
NA553379R	1,428.00	91
NA570912	3,182.00	88
NA57092	86.30	88
NA570924	6,047.00	88
NA57093	139.00	88
NA57094	943.00	88
NA570971	694.00	88
NA570974	1,387.00	88
NA573022	573.00	88
NA573100	260.00	88
NA573102	133.00	88
NA575002	790.00	88
NA59600	51.70	19,26,33
NA605010	51.70	115
NA61241	12.10	43
NA644200	392.00	47
NA644300	424.00	47
NA644300 3BY	424.00	47
NA669150	47.40	59
NA669250	47.40	59
NA79701	730.00	115
NA79702	1,289.00	115
NA79703	1,514.00	115
NA79704	1,849.00	115
NAS20025	3,177.00	104
NAS20050	3,797.00	104
NAS20080	4,488.00	104
NAS20120	5,939.00	104

Code	USD	Page(s)
R11059	6.30	99
R21180	7.00	104
R29326	10.40	108
R31589	21.60	96,97
R31706	37.80	99
R31981	16.00	95
R39204	4.70	62
R39591	36.40	59,63,64
R41441	54.50	97
R41447	39.30	19
R41660	72.30	96
R50005	4.80	97
R50008	10.00	97
R50047	19.90	97
R50048	24.20	97
R50057	4.90	96
R50058	2.00	97
R50060	23.30	96
R50065	4.80	97
R51838	52.40	96
R53003	42.70	97
R53004	42.70	97
R53005	48.90	97
R56142	2.80	33
R56214	2.90	33,59
R59119	17.70	33
R59681	26.60	33
R69176	27.50	59
R69413	10.50	59
Z111000	158.00	44
Z111900	148.00	44
Z111L99	148.00	44
Z113000	189.00	44
Z114000	189.00	44
Z115000	189.00	44
Z116000	158.00	44
Z121000	147.00	44
Z123000	178.00	44
Z124000	178.00	44
Z125000	178.00	44
Z126000	147.00	44
Z131000	173.00	44
Z133000	204.00	44
Z136000	173.00	44
Z141000	161.00	44
Z143000	192.00	44
Z144000	192.00	44
Z145000	192.00	44
Z146000	161.00	44
Z151000	164.00	44
Z161000	151.00	44
Z200041	70.60	45
Z200042	70.60	45
Z200043	70.60	45
Z200053	90.90	45
Z200411	70.60	45
Z200412	70.60	45
Z200413	70.60	45
Z200431	64.70	45
Z200432	64.70	45
Z200512	96.80	45
Z200513	96.80	45
Z200515	96.80	45

Code	USD	Page(s)
Z200517	96.80	45
Z200532	85.30	45
Z200535	85.30	45
Z200537	85.30	45
Z200617	153.00	45
Z200635	145.00	45
Z200637	145.00	45
Z200683	96.80	45
Z200687	96.80	45
Z200737	193.00	45
Z207411	96.70	45
Z207433	90.90	45
Z207533	111.00	45
Z207537	111.00	45
Z300053	113.00	45
Z300411	94.10	45
Z300412	94.10	45
Z300413	94.10	45
Z300431	88.30	45
Z300432	88.30	45
Z300512	118.00	45
Z300513	118.00	45
Z300515	118.00	45
Z300517	118.00	45
Z300532	109.00	45
Z300533	109.00	45
Z300535	109.00	45
Z300617	177.00	45
Z300635	164.00	45
Z300637	164.00	45
Z300687	123.00	45
Z300737	200.00	45
Z307433	114.00	45
Z307537	135.00	45
Z40	229.00	43
Z40F	259.00	43
Z42	250.00	43
Z44	223.00	43
Z44P	308.00	43
Z45	243.00	43
Z45P	313.00	43
Z45PL	343.00	43
Z46	303.00	43
Z46P	355.00	43
Z47	353.00	43
Z50	235.00	43
Z50F	265.00	43
Z54	229.00	43
Z54P	314.00	43
Z55	250.00	43
Z55P	319.00	43
Z55PL	349.00	43
Z56	309.00	43
Z56P	361.00	43
Z57	358.00	43
ZSR101	179.00	46
ZSR103	420.00	46
ZSR104	493.00	46
ZSR106	604.00	46
ZVR103	319.00	46
ZVR104	381.00	46
ZVR106	493.00	46

LIMITED WARRANTY

COVERAGE: Caleffi North America Inc. ("WARRANTOR") warrants that each Caleffi PRODUCT will be free from defects in material and workmanship for a period of two years* from the date of shipment/delivery of the PRODUCT (that can be identified by the "Caleffi" trademark, trade name, or logo affixed to them). The Limited Warranty is referred to herein as "the Limited warranty." The PURCHASER's sole and exclusive remedy under this Limited Warranty for defects in the PRODUCT shall be the repair, replacement or refund of the purchase price, in WARRANTOR's sole discretion, of the defective PRODUCT, or components thereof.

***PRODUCT warranty exceptions:**

Switching Zone Relays	**3 years**
Switching zone relays + valves (Z-one valves and Z-one relays installed together)	**5 years**
Storage Tank	**6 years**

NOT COVERED: This Limited Warranty also does not apply to, and WARRANTOR shall have no liability or responsibility in respect of, damages or expenses relating to:

- The failure to properly store, transport, install or use the PRODUCT as, for example, specified in any manuals or other literature supplied by WARRANTOR, on WARRANTOR's website, or in accordance with any applicable laws, codes, regulators or standards;
- Any PRODUCT purchased from any entity other than WARRANTOR;
- Alteration, change or modification of the PRODUCT, including its subcomponents, parts or assemblies;
- WARRANTOR also makes no warranty that a PRODUCT manufactured does not infringe the intellectual property or other proprietary rights of any third party;
- Accidents, misuse, abuse, abnormal use, improper use, negligent use, wilful misconduct, or use exceeding the recommended and permitted limits of the PRODUCT, and/or normal wear or deterioration;
- Any defect or non-conformity that has not been timely and promptly communicated in writing to WARRANTOR as set forth herein.
- Any damage, cost or expense caused by Act of God; or
- Loss of time, loss of use, inconvenience, loss of profits, lost business, lost business opportunities, damage to reputation, goodwill and any incidental or consequential damages arising out of or relating to the PRODUCT, or other matters not specifically covered hereunder.

PROCEDURE: Upon delivery, PURCHASER shall, within one (3) business day, inspect the PRODUCT for conformity and visible defects. PURCHASER shall give WARRANTOR immediate written, specific and detailed notice of any non-conformities or defects regarding the PRODUCT. Upon receipt of the written notice of claim, WARRANTOR shall have the right to inspect the PRODUCT. In the event of a defect covered by this Limited Warranty, WARRANTOR will, at WARRANTOR's discretion, repair or replace the PRODUCT or any component of the PRODUCT or refund the purchase price for that particular PRODUCT. In the event that PURCHASER submits a warranty claim that, in the sole reasonable discretion of the WARRANTOR, is unfounded, the PURCHASER shall reimburse the WARRANTOR all reasonable costs incurred by the WARRANTOR in evaluating the warranty claim (i.e. travel, lodging, expert evaluations, etc.). WARRANTOR must approve, in advance and in writing, all repairs or replacements covered under or performed pursuant to this Limited Warranty. Any warranty repairs or service must be performed exclusively by WARRANTOR or other authorized representative of WARRANTOR or by another servicing facility pre-approved in writing by WARRANTOR. Acceptance of any Limited Warranty claim is not an admission that any PRODUCT or any of its component parts are defective.
The PURCHASER forfeits any rights it may have under this Limited Warranty if the PURCHASER does not follow the procedure described herein.

All requests and notices under this Limited Warranty shall be directed to:

Caleffi North America Inc.
3883 West Milwaukee Road
Milwaukee, WI 53208
E-Mail: returns.us@caleffi.com
Phone (414) 238-2360
Fax: (414) 238-2366

LIMITATION OF DAMAGES: Except as expressly provided by this Limited Warranty, **WARRANTOR SHALL NOT BE RESPONSIBLE FOR ANY INCIDENTAL OR CONSEQUENTIAL DAMAGES ASSOCIATED WITH THE USE OR NON-USE OF THE PRODUCT OR A CLAIM UNDER THIS LIMITED WARRANTY, WHETHER THE CLAIM IS BASED ON CONTRACT, TORT OR OTHERWISE.** The foregoing statements of warranty are exclusive and in lieu of all other remedies or damages. Some states do not allow the exclusion or limitation of incidental or consequential damages, so only in this case this limitation or exclusion may not apply to you. This Limited Warranty shall be the sole and exclusive remedy available to the PURCHASER with respect to this PRODUCT. In the event of any alleged breach of any warranty or any legal action brought by the PURCHASER, based on breach of warranty, alleged negligence or other tortious conduct by WARRANTOR, the PURCHASER's sole and exclusive remedy will be the repair or replacement of any defective PRODUCT as stated herein. In no event shall the liability of the WARRANTOR exceed the purchase price of the PRODUCT.

DISCLAIMER: ANY IMPLIED WARRANTY OF MERCHANTABILITY OR FITNESS FOR A PARTICULAR PURPOSE AND ALL IMPLIED WARRANTIES ARISING FROM A COURSE OF DEALING, USAGE OF TRADE, BY STATUTE OR OTHERWISE, IS HEREBY STRICTLY LIMITED TO THE TERM OF THIS WRITTEN WARRANTY. This Limited Warranty shall be the sole and exclusive remedy available to the PURCHASER with respect to this PRODUCT. In the event of any alleged breach of any warranty or any legal action brought by the PURCHASER based on alleged negligence or other tortious conduct by WARRANTOR, the PURCHASER'S sole and exclusive remedy will be repair or replacement of defective materials or refund of the purchase price, as stated herein.

TRANSFER OF LIMITED WARRANTY: This warranty is made by WARRANTOR with only first PURCHASER of the PRODUCT and does not extend to any subsequent PURCHASER or any third parties. The unexpired portion of this Limited Warranty may not be transferred to any entity.

APPLICABLE LAW: The parties expressly acknowledge and irrevocably agree that any and all claims or disputes arising out of or otherwise relating to this Limited Warranty shall be decided by a binding arbitration administered by the American Arbitration Association pursuant to Commercial Industry Rules in effect as of the date of this Limited Warranty, to the exclusion of any courts of any place, except as necessary for the enforcement of arbitration rights The place for any such arbitration shall be The State of Wisconsin. PURCHASER expressly waives any provision of law in the jurisdiction in which PURCHASER is located or any other potentially applicable law which conflicts with any provision of this Limited Warranty at any time.

OTHER RIGHTS: Your acceptance of delivery of The PRODUCT constitutes your acceptance of the terms of this Limited Warranty. This Limited Warranty gives you specific legal rights, and you may also have other rights which vary from state to state. If any term or provision of this Limited Warranty is invalid or unenforceable under any local, state, or federal law, statute, judicial decision, regulation, ordinance, executive order or other rule of law, such term shall be deemed reformed or deleted, but only to the extent necessary to comply with such statute, regulation, ordinance, order or rule and the remaining provisions of this Limited Warranty shall remain in full force and effect.

ENTIRE AGREEMENT: This document alone contains the entire Limited Warranty given by WARRANTOR in respect of the PRODUCT. Nothing in WARRANTOR's product literature, marketing materials, advertisements and technical specifications expand or enlarge the scope of this Limited Warranty. There are no terms, promises, conditions or warranties regarding the PRODUCT other than those expressly contained herein. WARRANTOR specifically does not authorize any person, including but not limited to any dealer or other agent or employee of WARRANTOR, to extend the time, scope, terms or conditions of this Limited Warranty or to create or assume for WARRANTOR any other obligation or liability with respect to the PRODUCT or other products designed, manufactured or sold by WARRANTOR. All terms of this Limited Warranty are contractual and not mere recitals, and constitute material terms of this Limited Warranty. It is agreed and acknowledged that the provisions of this Limited Warranty allocate the risks between WARRANTOR and PURCHASER, that WARRANTOR's pricing reflects this allocation of risk, and but for this allocation and limitation of liability, WARRANTOR would not have entered into this Limited Warranty.
The agents, employees, and dealers of Caleffi Products are not authorized to make modifications to this limited warranty or make additional warranties binding on Caleffi.

THIS DOCUMENT AND ALL PROVISIONS CONTAINED HAS BEEN SPECIFICALLY AGREED BETWEEN THE PARTIES.

Suggested List Price
Effective February 1, 2019
Canceling All Prior Issues
specifications and prices are subject to change without notice

Caleffi North America, Inc.
3883 W. Milwaukee Road • Milwaukee, WI 53208
Tel: 414.238.2360 • Fax: 414.238.2366
sales@caleffi.com • www.caleffi.com

SKU: 19-001