BRADFORD WHITE®
WATER HEATERS

Light Duty Commercial Gas Replacement Parts List

"RG" & "LG" Atmospheric Vent Models

Models Covered:
RG(155, 255)H*(N,X)
RG(250, 275)H*(N,X)(-500, -600)
RG2100H*(N,X)(-500, -600)
LG(155, 255)H80*(N,X)
LG250H65*(N,X)(-500, -600)
LG275H76*(N,X)(-500, -600)
LG2100H*85(N,X)(-500, -600)
***Denotes warranty year**

Includes Hydrojet®
Total Performance System

Effective: January, 2023
ECO 8248-3

NOTE: BOTH MODEL AND SERIAL NUMBERS ARE REQUIRED FOR ORDERING REPLACEMENT PARTS

Dimensions and specifications subject to change without notice.

WARNING
CANCER AND REPRODUCTIVE HARM
WWW.P65WARNINGS.CA.GOV
As required by the state of California Proposition 65.

Save this manual for future reference

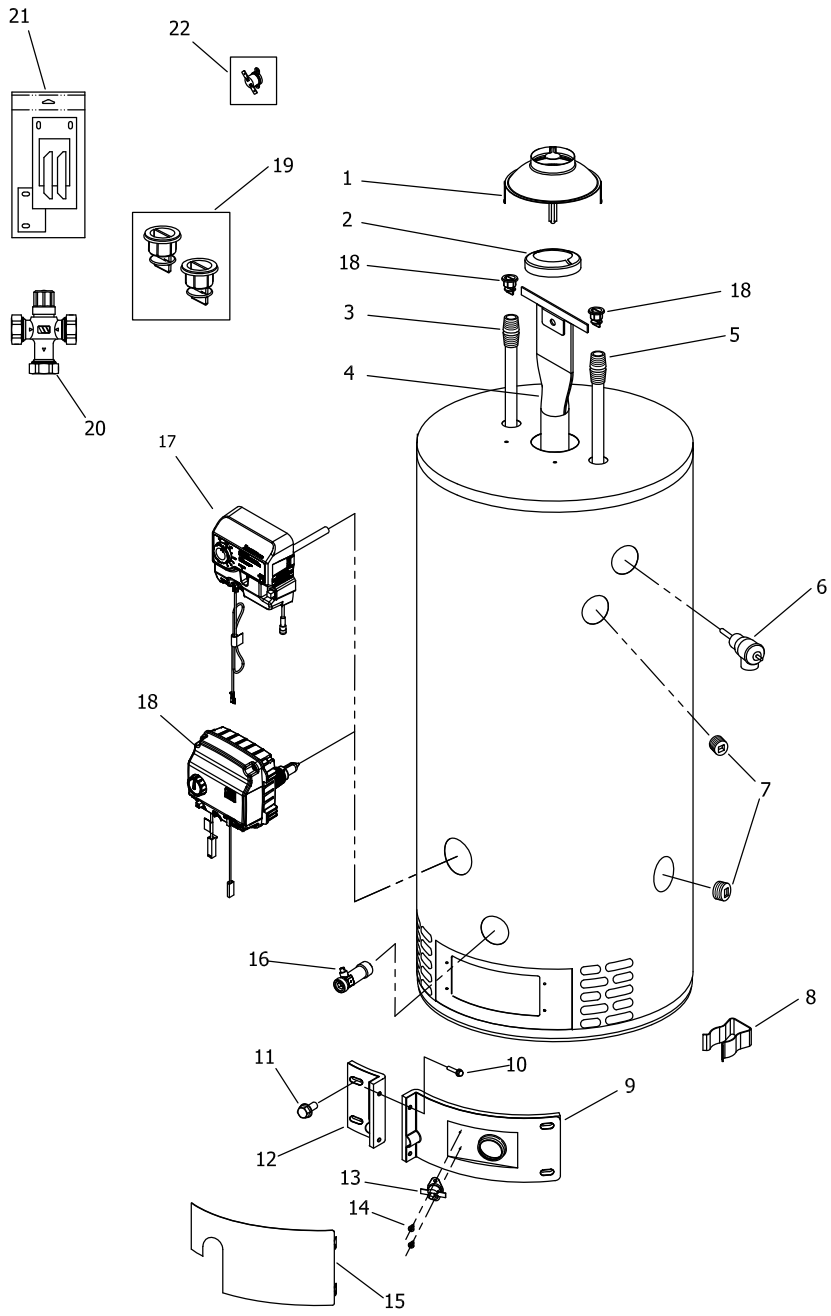

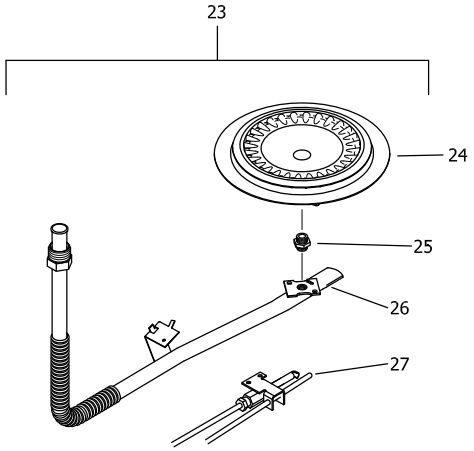

NATURAL GAS BURNER ASSEMBLY

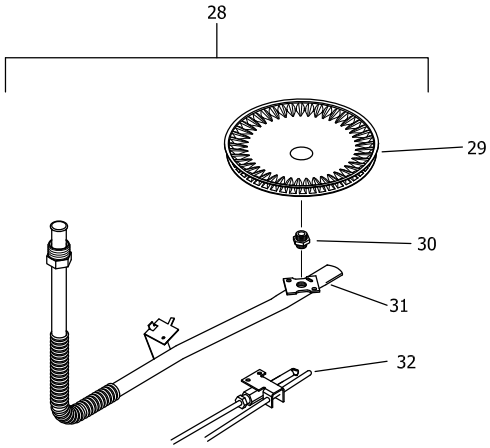

LP GAS BURNER ASSEMBLY

Item	Description	Model RG250H*(N,X)	Model LG250H65*(N,X)	Model RG250H*(N,X)-600	Model LG250H65*(N,X)-600
1	Draft Diverter	239-33081-02-20-15	239-33081-02-20-15	239-33081-02-20-15	239-33081-02-20-15
2	Flue Reducer	243-42572-00	243-42572-00	243-42572-00	243-42572-00
3	Hot Water Outlet Anode (Magnesium)▲#	415-47776-19	415-47776-19	415-47776-19	415-47776-19
	Hot Water Outlet (Aluminum)▲#	415-32999-28	415-32999-28	415-32999-28	415-32999-28
	Hot Water Outlet (A420 Aluminum)▲#	415-49560-10	415-49560-10	415-49560-10	415-49560-10
4	Flue Core	239-51837-00	239-51837-00	239-51837-00	239-51837-00
5	Cold Water Inlet Dip Tube (PEX)▲	415-45092-06	415-45092-08	415-45092-06	415-45092-08
6	T&P Relief Valve	415-40594-02	415-40594-02	415-40594-02	415-40594-02
7	3/4 NPT Pipe Plug	239-11638-00	239-11638-00	239-11638-00	239-11638-00
8	Feedline Clip	239-47475-00	239-47475-00	239-47475-00	239-47475-00
9	Right Side Inner Door Complete	239-43963-07	239-43963-07	239-43963-07	239-43963-07
10	Screw-#8-15 x 3/4 INHXWS	239-44195-00	239-44195-00	239-44195-00	239-44195-00
11	Screw-#10-12 x 3/4 HWH	239-52581-00	239-52581-00	239-52581-00	239-52581-00
12	Left Side Inner Door Complete	239-43968-18	239-43968-18	239-43968-18	239-43968-18
13	Resettable Thermal Switch	415-43676-02	415-43676-02	415-43676-02	415-43676-02
14	Screw-#6-20 x 3/8 PHCR	239-43967-00	239-43967-00	239-43967-00	239-43967-00
15	Outer Door	239-43962-00	239-43962-00	239-43962-00	239-43962-00
16	Brass Drain Valve	415-42351-02	415-42351-02	415-42351-02	415-42351-02
17	Resideo Gas Control Direct Replacement (Natural Gas)	415-52907-02	415-52908-02	---	---
	Resideo Gas Control Direct Replacement (LP Gas)	415-52909-02	415-52910-02	---	---
	Resideo Gas Control Universal Replacement (Nat. Gas)	415-53359-00	415-53359-00	---	---
	Resideo Gas Control Universal Replacement (LP Gas)	415-53360-00	415-53360-00	---	---
18	SIT Gas Control Direct Replacement (Natural Gas)	---	---	415-52944-02	415-53011-02
	SIT Gas Control Direct Replacement (LP Gas)	---	---	415-52945-02	415-53014-02
19	Kit-Heat Trap Insert (Inlet & Outlet)	265-45420-00	265-51572-00	265-45420-00	265-51572-00
20	ASSE Approved Mixing Valve (Optional)	239-51778-00	239-51778-00	239-51778-00	239-51778-00
21	Inner Door Gasket Kit	239-44078-00	239-44078-00	239-44078-00	239-44078-00
22	Resettable Thermal Switch Kit (1 pcs.)	415-43676-02	415-43676-02	415-43676-02	415-43676-02
	Natural Gas Burner Assembly				
23	Nat Gas Burner Assembly Complete*** **	265-47439-05-27	265-47439-05-27	265-53623-04-27	265-53623-04-27
24	Nat. Gas Burner**	228-42506-00	228-42506-00	228-42506-00	228-42506-00
25	Nat. Gas Main Burner Orifice** (0 Ft. to 2,000 Ft.)	234-41034-27	234-41034-27	234-41034-27	234-41034-27
	Nat. Gas High Altitude Orifice 2,001 Ft. to 7000 Ft. (-475 model suffixes)**	234-41034-30	234-41034-30	234-41034-30	234-41034-30
	Nat. Gas High Altitude Kit 7,001 Ft. to 10,000 Ft.	265-51311-02-31	265-51311-02-31	265-51311-02-31	265-51311-02-31
26	Feedline	233-48094-04	233-48094-04	233-48094-04	233-48094-04
27	Nat. Gas Pilot Assembly**	415-47845-05	415-47845-05	415-52946-05	415-52946-05
	LP Gas Burner Assembly				
28	LP Gas Burner Assembly Complete*** **	265-47440-12-43	265-47440-12-43	265-53637-03-43	265-53637-03-43
29	LP Gas Burner**	228-47000-00	228-47000-00	228-47000-00	228-47000-00
30	LP Gas Main Burner Orifice**	234-47064-43	234-47064-43	234-47064-43	234-47064-43
	LP Gas High Altitude Orifice 2,001 Ft. to 7,000 Ft. (-475 model suffixes)**	234-47064-46	234-47064-46	234-47064-46	234-47064-46
	LP Gas High Altitude Orifice 7,001 Ft. to 10,000 Ft.**	265-51367-02-48	265-51367-02-48	265-51367-02-48	265-51367-02-48
31	Feedline	233-47108-04	233-47108-04	233-47108-04	233-47108-04
32	LP Gas Pilot Assembly**	233-47846-04	233-47846-04	415-52947-05	415-52947-05
	LP to Nat. Gas Conversion Kit	265-45712-82	265-45712-86	265-53621-50	265-53621-54
	LP to Nat. Gas High Altitude Converstion Kit (-475 model suffixes)	265-45712-83	265-45712-87	265-53621-51	265-53621-55

* Applies to all warranties
** Inner door gasket kit recommended
*** Ordering a complete burner assembly may increase delivery time.
Please order the specific component required for the quickest delivery.
Anode may need to be cut to length; see end of this parts list for further information.
▲Order with item 19

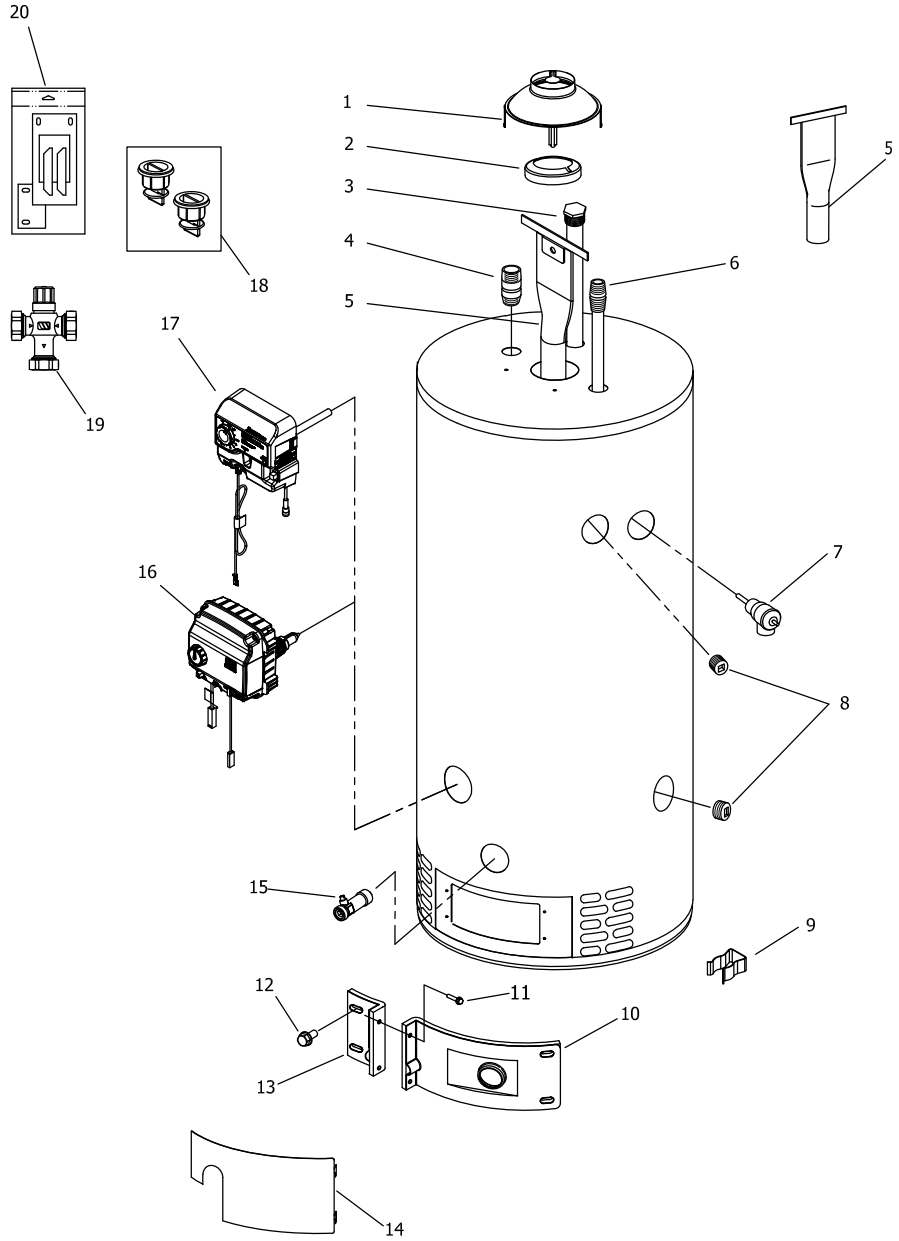

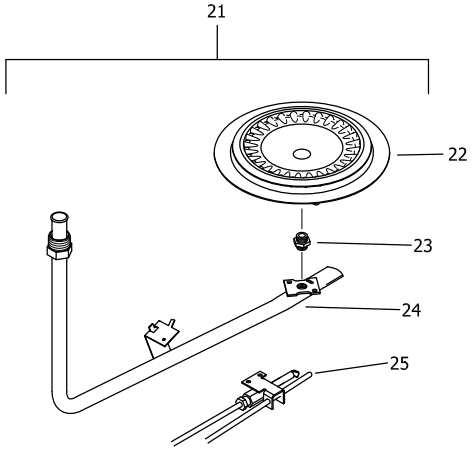

NATURAL GAS BURNER ASSEMBLY

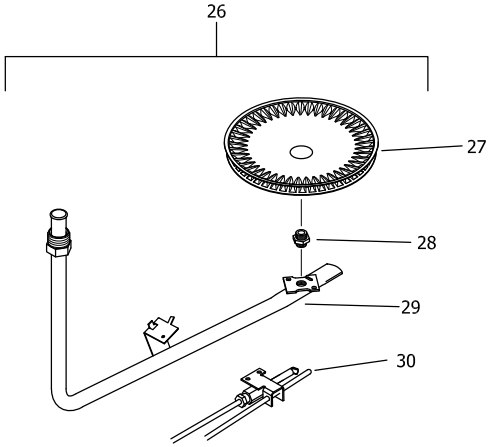

LP GAS BURNER ASSEMBLY

Item	Description	Model RG275H*(N,X)	Model LG275H76*(N,X)	Model RG275H*(N,X)-600	Model LG275H76*(N,X)-600
1	Draft Diverter ■	239-12950-00	239-12950-00	239-12950-00	239-12950-00
	Draft Diverter ►	239-33081-02-20-16	239-33081-02-20-16	239-33081-02-20-16	239-33081-02-20-16
	Draft Diverter ▲	239-53655-00	239-53655-00	239-53655-00	239-53655-00
2	Flue Reducer	243-42572-00	243-42572-00	243-42572-00	243-42572-00
3	Hex Head Sacrificial Anode (Magnesium) ● #	415-47782-08	415-47782-08	415-47782-08	415-47782-08
	Hex Head Sacrificial Anode (Aluminum) ●#	415-38508-07	415-38508-07	415-38508-07	415-38508-07
	Hex Head Sacrificial Anode (A420 Aluminum) ●#	415-49559-04	415-49559-04	415-49559-04	415-49559-04
4	Outlet Nipple 1 NPT X 2 1/2"	415-50053-02	415-50053-02	415-50053-02	415-50053-02
5	Flue Core ►	239-50666-00	239-50666-00	239-50666-00	239-50666-00
	Flue Core ▲	239-53137-00	239-53137-00	239-53137-00	239-53137-00
6	Cold Water Inlet Dip Tube (Polysulfone)	415-47040-01	415-47040-01	415-47040-01	415-47040-01
7	T&P Relief Valve	415-40594-02	415-40594-02	415-40594-02	415-40594-02
8	3/4 NPT Pipe Plug	239-11638-00	239-11638-00	239-11638-00	239-11638-00
9	Feedline Clip	239-47475-00	239-47475-00	239-47475-00	239-47475-00
10	Right Side Inner Door Complete	239-47504-22	239-47504-22	239-47504-22	239-47504-22
11	Screw-#8-15 x 3/4 INHXWS	239-44195-00	239-44195-00	239-44195-00	239-44195-00
12	Screw-#10-12 x 3/4 HWH	239-52581-00	239-52581-00	239-52581-00	239-52581-00
13	Left Side Inner Door Complete	239-43968-20	239-43968-20	239-43968-20	239-43968-20
14	Outer Door	239-43962-00	239-43962-00	239-43962-00	239-43962-00
15	Brass Drain Valve	415-42351-02	415-42351-02	415-42351-02	415-42351-02
16	Resideo Gas Control Direct Replacement (Natural Gas)	415-53361-03	415-53361-05	---	---
	Resideo Gas Control Direct Replacement (LP Gas)	415-53361-04	415-53361-06	---	---
17	SIT Gas Control Direct Replacement (Natural Gas)	---	---	415-53678-03	415-53678-05
	SIT Gas Control Direct Replacement (LP Gas)	---	---	415-53678-04	415-53678-06
18	Kit-Heat Trap Insert (Inlet & Outlet)	265-51572-00	265-51572-00	265-51572-00	265-51572-00
19	ASSE Approved Mixing Valve (Optional)	239-51778-00	239-51778-00	239-51778-00	239-51778-00
20	Inner Door Gasket Kit	239-47792-00	239-47792-00	239-47792-00	239-47792-00
	Natural Gas Burner Assembly				
21	Nat Gas Burner Assembly Complete***	265-48110-05-22	265-48110-05-22	265-53642-02-22	265-53642-02-22
22	Nat. Gas Burner **	228-47000-00	228-47000-00	228-47000-00	228-47000-00
23	Nat. Gas Main Burner Orifice 0 Ft. to 2,000 Ft.**	234-41034-22	234-41034-22	234-41034-22	234-41034-22
	Nat. Gas High Altitude 2,001 Ft. to 7000 Ft. (-475 model suffixes) **	234-41034-27	234-41034-27	234-41034-27	234-41034-27
	Nat. Gas High Altitude Kit 7,001 Ft. to 10,000 Ft.	265-51311-01-29	265-51311-01-29	265-51311-01-29	265-51311-01-29
24	Feedline **	233-48095-04	233-48095-04	233-48095-04	233-48095-04
25	Nat. Gas Pilot Assembly **	233-48077-03	233-48077-03	415-53604-01	415-53604-01
	LP Gas Burner Assembly				
26	LP Gas Burner Assembly Complete***	265-48254-02-38	265-48254-02-38	265-53643-02-38	265-53643-02-38
27	LP Gas Burner **	228-46938-00	228-46938-00	228-46938-00	228-46938-00
28	LP Gas Main Burner Orifice 0 Ft. to 2,000 Ft.**	234-47064-38	234-47064-38	234-47064-38	234-47064-38
	LP Gas High Altitude 2,001 Ft. to 7,000 Ft. (-475 model suffixes) **	234-47064-42	234-47064-42	234-47064-42	234-47064-42
	LP Gas High Altitude Kit 7,001 Ft. to 10,000 Ft.	265-51367-03-44	265-51367-03-44	265-51367-03-44	265-51367-03-44
29	Feedline **	233-47677-04	233-47677-04	233-47677-04	233-47677-04
30	LP Gas Pilot Assembly **	233-48078-03	233-48078-03	415-53605-01	415-53605-01
	LP to Nat. Gas Conversion Kit	265-53403-07	265-53403-09	265-53632-23	265-53632-25
	LP to Nat. Gas High Altitude Converstion Kit	265-53403-11	265-53403-11	265-53632-24	265-53632-27

■ For serial numbers starting before "TA42690692"
► For serial numbers starting with "TA42693470" to "XE47931831"
▲ For serial numbers starting with or after "XE47931831"
Anode may need to be cut to length; see end of this parts list for further information.
* Applies to all warranties
** Inner door gasket kit recommended
*** Ordering a complete burner assembly may increase delivery time.
Please order the specific component required for the quickest delivery.
● Order with item 18

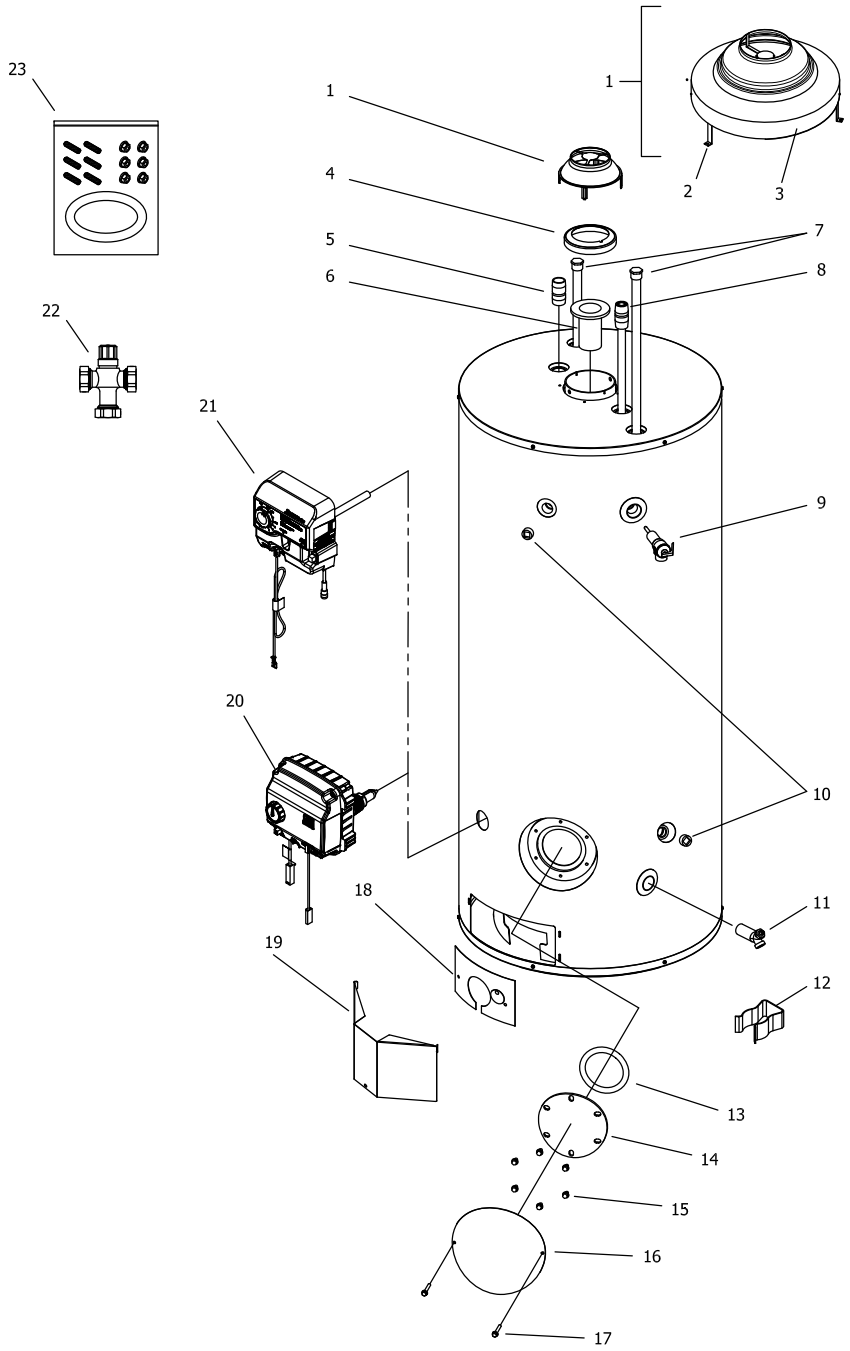

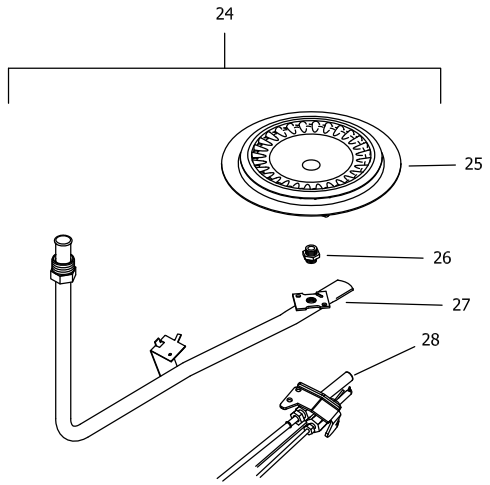

NATURAL GAS (BN) BURNER ASSEMBLY

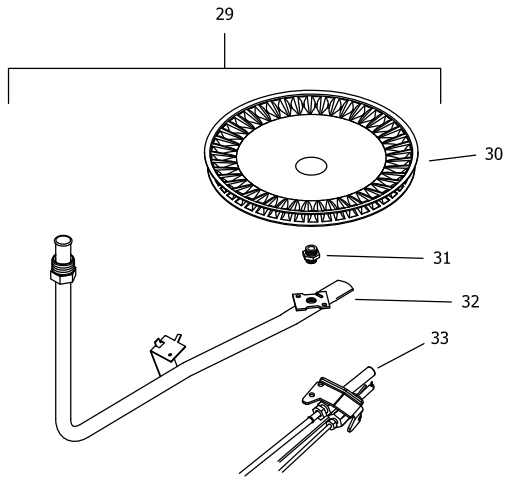

LP GAS (SX) BURNER ASSEMBLY

Item	Description	Model RG2100H*(N,X)	Model LG2100H*85(N,X)	Model RG2100H*(N,X)-600
1	Draft Diverter Assembly Kit ►	265-52089-00	265-52089-00	265-52089-00
2	Draft Diverter Leg Kit Only►	243-43689-03	243-43689-03	243-43689-03
3	Draft Diverter Only►	239-52089-00-16	239-52089-00-16	239-52089-00-16
4	Flue Reducer	243-36920-00	243-36920-00	243-36920-00
5	Outlet Nipple	229-40913-03	229-40913-03	229-40913-03
6	Flue Core ►	239-52063-00	239-52063-00	239-52063-00
7	Hex Head Sacrificial Anode (x2) (Magnesium) #	415-47782-08	415-47782-08	415-47782-08
	Hex Head Sacrificial Anode (x2) (Aluminum) #	415-38508-07	415-38508-07	415-38508-07
	Hex Head Sacrificial Anode (x2) (A420 Aluminum) #	415-49559-04	415-49559-04	415-49559-04
8	Cold Water Inlet Dip Tube (Polysulfone)	415-46993-01	415-46993-01	415-46993-01
9	T&P Relief Valve	415-40594-02	415-40594-02	415-40594-02
10	3/4 NPT Pipe Plug	239-11638-00	239-11638-00	239-11638-00
11	Brass Drain Valve	415-42351-02	415-42351-02	415-42351-02
12	Feedline Clip	239-47475-00	239-47475-00	239-47475-00
13	Cleanout O-Ring Gasket	205-18427-00	205-18427-00	205-18427-00
14	Cleanout Cover	205-18428-00	205-18428-00	205-18428-00
15	Cleanout Screw 5/16-18x1/2 hex (x6)	239-82166-00	239-82166-00	239-82166-00
16	Cleanout Jacket Cover	243-20299-00	243-20299-00	243-20299-00
17	Cleanout Jacket Cover Screw 1/2-13x1 1/4 (x2)	239-43251-00	239-43251-00	239-43251-00
18	Inner Door Complete	243-39207-00	243-39207-00	243-39207-00
19	Outer Door	243-37177-00	243-37177-00	243-37177-00
20	Resideo Gas Control Direct Replacement (Natural Gas)	415-53361-03	415-53361-05	---
	Resideo Gas Control Direct Replacement (LP Gas)	415-53361-04	415-53361-06	---
21	SIT Gas Control Direct Replacement (Natural Gas)	---	---	415-53678-03
	SIT Gas Control Direct Replacement (LP Gas)	---	---	415-53678-04
22	ASSE Approved Mixing Valve (Optional)	239-51778-00	239-51778-00	239-51778-00
23	Kit-Cleanout (Not for Use With ASME Tanks)	415-54256-00	415-54256-00	415-54256-00
	Natural Gas Burner Assembly			
24	Nat Gas Burner Assembly Complete***	265-52024-00-18	265-52024-00-18	265-53648-00-18
25	Nat. Gas Burner **	228-52013-00	228-52013-00	228-52013-00
26	Nat. Gas Main Burner Orifice 0 Ft. to 2,000 Ft.**	234-41034-18	234-41034-18	234-41034-18
	Nat. Gas High Altitude 2,001 Ft. to 7000 Ft. (-475 model suffixes) **	234-41034-22	234-41034-22	234-41034-22
	Nat. Gas High Altitude Kit 7,001 Ft. to 10,000 Ft.	265-51311-03-27	265-51311-03-27	265-51311-03-27
27	Feedline **	233-48209-01	233-48209-01	233-48209-01
28	Nat. Gas Pilot Assembly **	233-48077-03	233-48077-03	415-53604-01
	LP Gas Burner Assembly			
29	LP Gas Burner Assembly Complete***	265-48255-01-35	265-48255-01-35	265-53630-01-35
30	LP Gas Burner **	228-46938-00	228-46938-00	228-46938-00
31	LP Gas Main Burner Orifice 0 Ft. to 2,000 Ft.**	234-47064-35	234-47064-35	234-47064-35
	LP Gas High Altitude 2,001 Ft. to 7,000 Ft. (-475 model suffixes) **	234-47064-39	234-47064-39	234-47064-39
	LP Gas High Altitude Kit 7,001 Ft. to 10,000 Ft.	265-51367-01-42	265-51367-01-42	265-51367-01-42
32	Feedline **	233-47065-02	233-47065-02	233-47065-02
33	LP Gas Pilot Assembly **	233-48078-03	233-48078-03	415-53605-01
	LP to Nat. Gas Conversion Kit	265-53403-02	265-53403-01	265-53632-08
	LP to Nat. Gas High Altitude Converstion Kit	265-53403-12	265-53403-12	265-53632-38

■ For serial numbers starting before "ND"
► For serial numbers starting with or after "ND"
Anode may need to be cut to length; see end of this parts list for further information.
* Applies to all warranties
** Inner door gasket kit recommended
*** Ordering a complete burner assembly may increase delivery time.
Please order the specific component required for the quickest delivery.

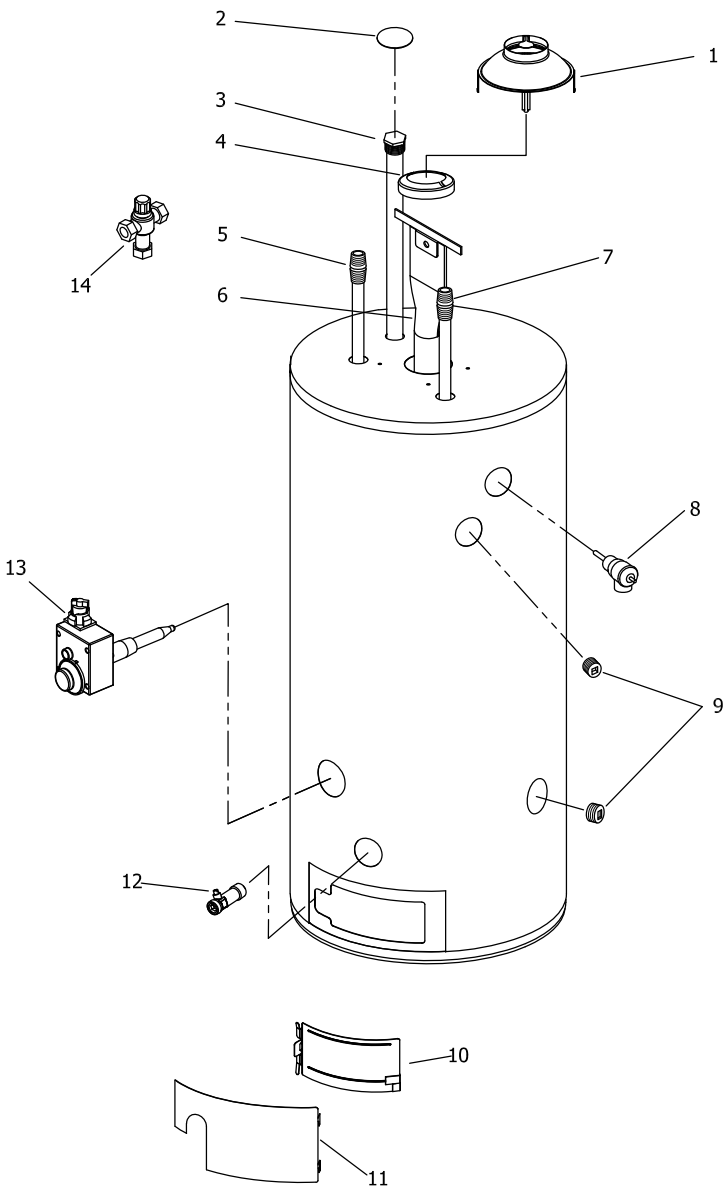

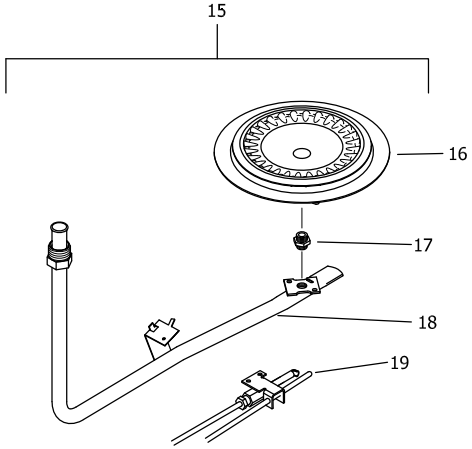

NATURAL GAS BURNER ASSEMBLY

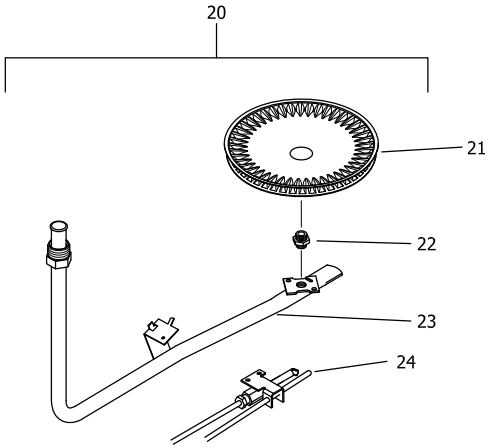

LP GAS BURNER ASSEMBLY

Item	Description	Model RG155H*(N,X)	Model LG155H80*(N,X)
1	Draft Diverter	239-33081-02-20-15	239-33081-02-20-15
2	Hole Closure	239-31547-02	239-31547-02
3	Hex Head Sacrificial Anode (Magnesium) #	415-47782-08	415-47782-08
	Hex Head Sacrificial Anode (Aluminum) #	415-38508-07	415-38508-07
	Hex Head Sacrificial Anode (A420 Aluminum) #	415-49559-04	415-49559-04
4	Flue Reducer	243-42572-00	243-42572-00
5	Hot Water Outlet Anode (Magnesium) #	415-47776-13	415-47776-13
	Hot Water Outlet Anode (Aluminum) #	415-32999-13	415-32999-13
	Hot Water Outlet Anode (A420 Aluminum) #	415-49560-05	415-49560-05
6	Flue Core	239-45676-00	239-45676-00
7	Cold Water Inlet Dip Tube (Polysulfone)	415-45092-02	415-45092-02
8	T&P Relief Valve	415-40594-02	415-40594-02
9	3/4 NPT Pipe Plug	239-11638-00	239-11638-00
10	Inner Door Assembly	243-46049-00	243-46049-00
11	Outer Door	243-41061-00	243-41061-00
12	Brass Drain Valve	415-42351-02	415-42351-02
13	Gas Control Direct Replacement (Natural Gas)	265-47444-01	265-47444-01
	Gas Control Direct Replacement (LP Gas)	265-47445-01	265-47445-01
14	ASSE Approved Mixing Valve (Optional)	239-51778-00	239-51778-00
	Natural Gas Burner Assembly		
15	Nat Gas Burner Assembly Complete***	265-46004-03-20	265-46004-03-20
16	Nat. Gas Burner**	228-42506-00	228-42506-00
17	Nat. Gas Main Burner Orifice 0 Ft. to 2,000 Ft.**	234-41034-20	234-41034-20
	Nat. Gas High Altitude 2,001 Ft. to 7000 Ft. (-475 model suffixes)**	234-41034-26	234-41034-26
	Nat. Gas High Altitude Kit 7,001 Ft. to 10,000 Ft.	265-51311-02-29	265-51311-02-29
18	Feedline **	233-43660-15	233-43660-15
19	Nat. Gas Pilot Assembly**	233-40248-05	233-40248-05
	LP Gas Burner Assembly		
20	LP Gas Burner Assembly Complete***	265-47037-03-38	265-47037-03-38
21	LP Gas Burner**	228-46938-00	228-46938-00
22	LP Gas Main Burner Orifice 0 Ft. to 2,000 Ft.**	234-47064-38	234-47064-38
	LP Gas High Altitude Orifice 2,001 Ft. to 7,000 Ft. (-475 model suffixes)**	234-47064-42	234-47064-42
	LP Gas High Altitude Kit 7,001 Ft. to 10,000 Ft.	265-51367-02-44	265-51367-02-44
23	Feedline**	233-46939-02	233-46939-02
24	LP Gas Pilot Assembly**	233-40261-03	233-40261-03
	LP to Nat. Gas Conversion Kit	265-45713-04	265-45713-04
	LP to Nat. Gas High Altitude Converstion Kit	265-45713-06	265-45713-06

*Applies to all warranties
** Inner door gasket kit recommended
***Ordering a complete burner assembly may increase delivery time. Please order the specific component required for the quickest delivery.
Anode may need to be cut to length; see end of this parts list for further information.

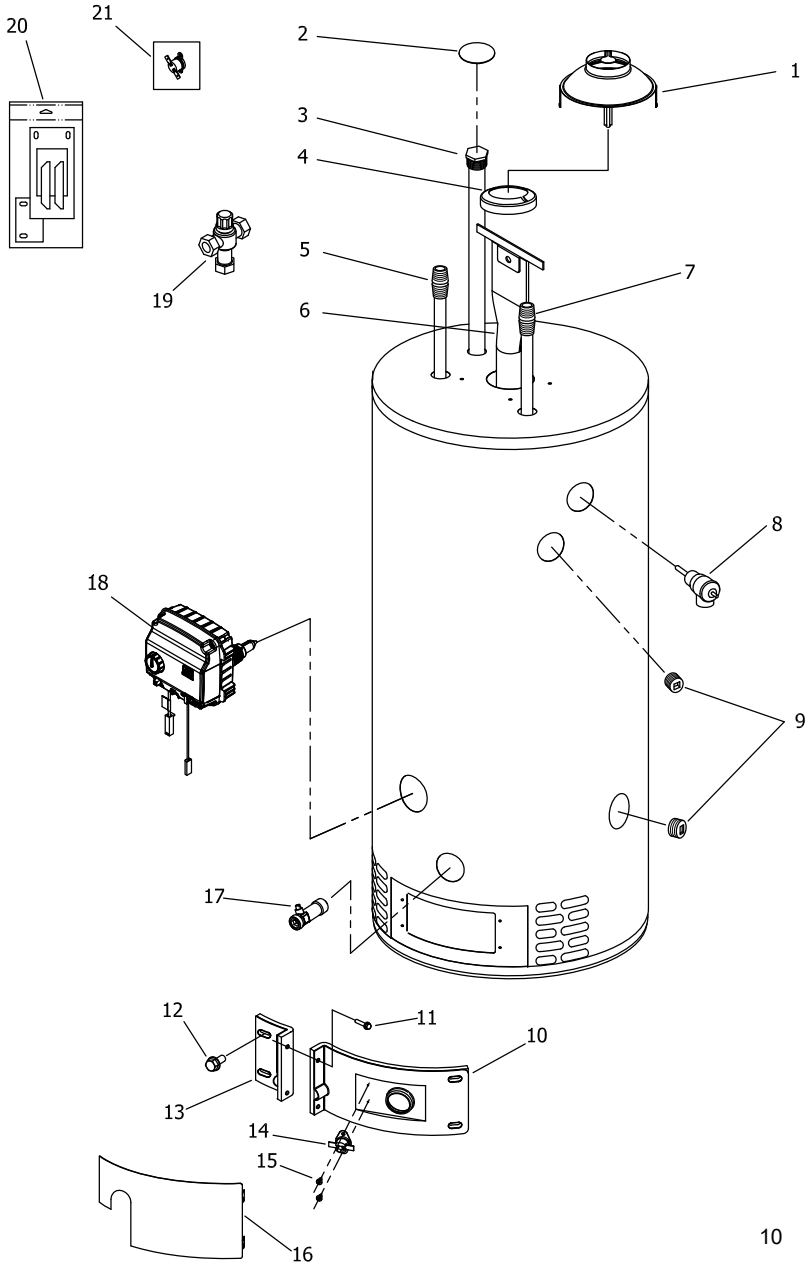

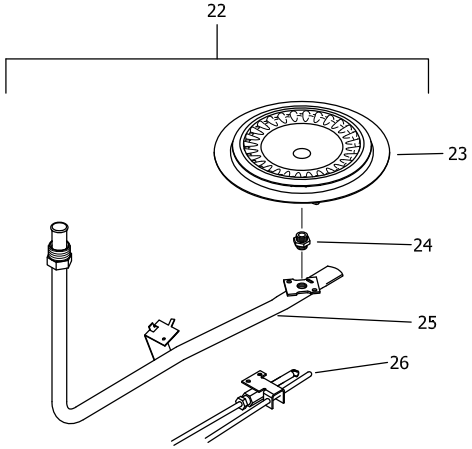

NATURAL GAS BURNER ASSEMBLY

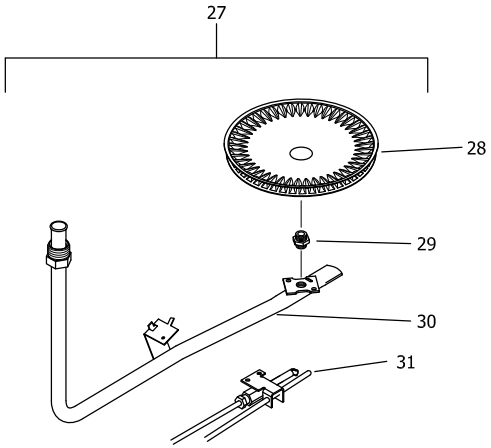

LP GAS BURNER ASSEMBLY

Item	Description	Model RG255H*(N,X)	Model LG255H80*(N,X)
1	Draft Diverter	239-33081-02-20-15	239-33081-02-20-15
2	Hole Closure	239-31547-02	239-31547-02
3	Hex Head Sacrificial Anode (Magnesium) #	415-47782-08	415-47782-08
	Hex Head Sacrificial Anode (Aluminum) #	415-38508-07	415-38508-07
	Hex Head Sacrificial Anode (A420 Aluminum) #	415-49559-04	415-49559-04
4	Flue Reducer	243-42572-00	243-42572-00
5	Hot Water Outlet Anode (Magnesium) #	415-47776-13	415-47776-13
	Hot Water Outlet Anode (Aluminum) #	415-32999-13	415-32999-13
	Hot Water Outlet Anode (A420 Aluminum) #	415-49560-05	415-49560-05
6	Flue Core	239-45676-00	239-45676-00
7	Cold Water Inlet Dip Tube (Polysulfone)	415-45092-02	415-45092-02
8	T&P Relief Valve	415-40594-03	415-40594-03
9	3/4 NPT Pipe Plug	239-11638-00	239-11638-00
10	Right Side Inner Door Complete	239-43963-07	239-43963-07
11	Screw-#8-18 x 3/4 HWH	239-44195-00	239-44195-00
12	Screw-#10-12 x 3/4 HWH	239-52581-00	239-52581-00
13	Left Side Inner Door Complete	239-43968-18	239-43968-18
14	Resettable Thermal Switch	415-43676-02	415-43676-02
15	Screw-#6-20 x 3/8 PHCR	239-43967-00	239-43967-00
16	Outer Door	239-43962-00	239-43962-00
17	Brass Drain Valve	415-48070-02	415-48070-02
18	Resideo Gas Control Direct Replacement (Natural Gas)	415-52908-02	415-52908-02
	Resideo Gas Control Direct Replacement (LP Gas)	415-52910-02	415-52910-02
19	ASSE Approved Mixing Valve (Optional)	239-51778-00	239-51778-00
20	Inner Door Gasket Kit	239-44078-00	239-44078-00
21	Resettable Thermal Switch Kit (1 pcs.)	415-43676-02	415-43676-02
	Natural Gas Burner Assembly		
22	Nat Gas Burner Assembly Complete***	265-47439-19-19	265-47439-19-19
23	Nat. Gas Burner**	228-47000-00	228-47000-00
24	Nat. Gas Main Burner Orifice 0 Ft. to 2,000 Ft.**	234-41034-19	234-41034-19
	Nat. Gas High Altitude 2,001 Ft. to 7000 Ft. (-475 model suffixes)**	234-41034-25	234-41034-25
	Nat. Gas High Altitude Kit 7,001 Ft. to 10,000 Ft.	265-51311-04-28	265-51311-04-28
25	Feedline **	233-48094-05	233-48094-05
26	Nat. Gas Pilot Assembly**	415-47845-05	415-47845-05
	LP Gas Burner Assembly		
27	LP Gas Burner Assembly Complete***	265-47440-30-38	265-47440-30-38
28	LP Gas Burner**	228-47000-00	228-47000-00
29	LP Gas Main Burner Orifice 0 Ft. to 2,000 Ft.**	234-41034-38	234-41034-38
	LP Gas High Altitude Orifice 2,001 Ft. to 7,000 Ft. (-475 model suffixes)**	234-41034-42	234-41034-42
	LP Gas High Altitude Kit 7,001 Ft. to 10,000 Ft.	265-51367-02-44	265-51367-02-44
30	Feedline**	233-47108-05	233-47108-05
31	LP Gas Pilot Assembly**	415-47846-05	415-47846-05

Anode may need to be cut to length; see end of this parts list for further information.
* Applies to all warranties
** Inner door gasket kit recommended
*** Ordering a complete burner assembly may increase delivery time.
Please order the specific component required for the quickest delivery.

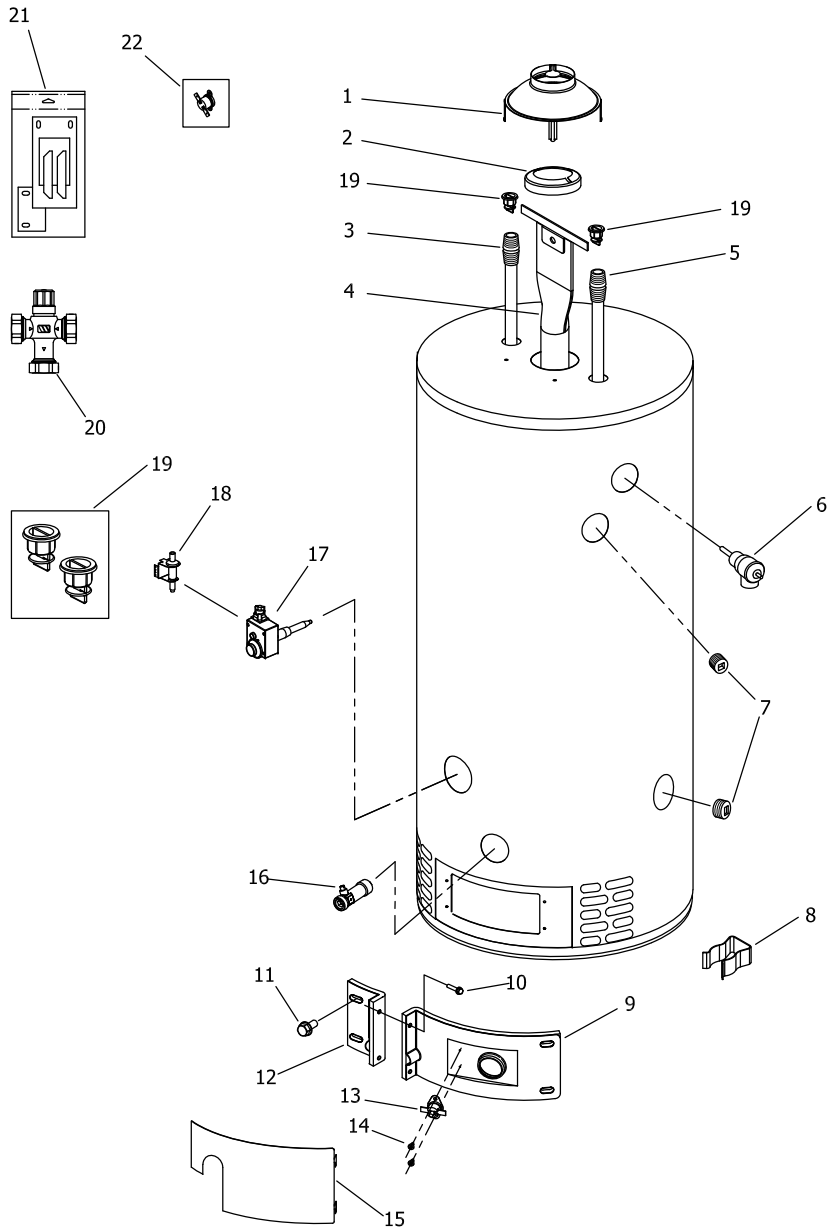

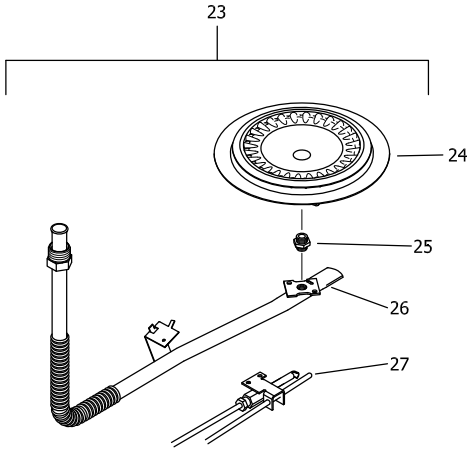

NATURAL GAS BURNER ASSEMBLY

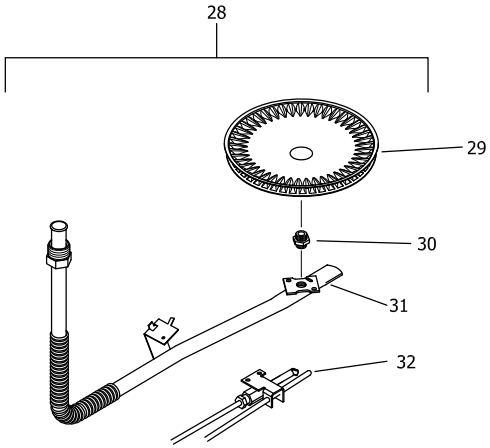

LP GAS BURNER ASSEMBLY

Item	Description	Model RG250H*(N,X)-500	Model LG250H65*(N,X)-500
1	Draft Diverter	239-33081-02-20-15	239-33081-02-20-15
2	Flue Reducer	243-42572-00	243-42572-00
3	Hot Water Outlet Anode (Magnesium)▲#	415-47776-19	415-47776-19
	Hot Water Outlet (Aluminum)▲#	415-32999-28	415-32999-28
	Hot Water Outlet (A420 Aluminum)▲#	415-49560-10	415-49560-10
4	Flue Core	239-51837-00	239-51837-00
5	Cold Water Inlet Dip Tube (PEX)▲	415-45092-06	415-45092-08
6	T&P Relief Valve	415-40594-02	415-40594-02
7	3/4 NPT Pipe Plug	239-11638-00	239-11638-00
8	Feedline Clip	239-47475-00	239-47475-00
9	Right Side Inner Door Complete	239-43963-07	239-43963-07
10	Screw-#8-15 x 3/4 INHXWS	239-44195-00	239-44195-00
11	Screw-#10-12 x 3/4 HWH	239-52581-00	239-52581-00
12	Left Side Inner Door Complete	239-43968-18	239-43968-18
13	Resettable Thermal Switch	415-43676-02	415-43676-02
14	Screw-#6-20 x 3/8 PHCR	239-43967-00	239-43967-00
15	Outer Door	239-43962-00	239-43962-00
16	Brass Drain Valve	415-42351-02	415-42351-02
17	Gas Control Direct Replacement (Natural Gas)	265-46181-02	415-46367-03
	Gas Control Direct Replacement (LP Gas)	415-46182-02	415-46368-03
18	Piezo Igniter Kit	243-43450-00	243-43450-00
19	Kit-Heat Trap Insert (Inlet & Outlet)	265-45420-00	265-51572-00
20	ASSE Approved Mixing Valve (Optional)	239-51778-00	239-51778-00
21	Inner Door Gasket Kit	239-44078-00	239-44078-00
22	Resettable Thermal Switch Kit (1 pcs.)	415-43676-02	415-43676-02
	Natural Gas Burner Assembly		
23	Nat Gas Burner Assembly Complete*** **	243-43971-04-27	243-43971-04-27
24	Nat. Gas Burner**	228-42506-00	228-42506-00
25	Nat. Gas Main Burner Orifice** (0 Ft. to 2,000 Ft.)	234-41034-27	234-41034-27
	Nat. Gas High Altitude Orifice 2,001 Ft. to 7000 Ft. (-475 model suffixes)**	234-41034-30	234-41034-30
	Nat. Gas High Altitude Kit 7,001 Ft. to 10,000 Ft.	265-51311-02-31	265-51311-02-31
26	Feedline	233-48094-04	233-48094-04
27	Nat. Gas Pilot Assembly**	233-46277-03	233-46277-03
	LP Gas Burner Assembly		
28	LP Gas Burner Assembly Complete*** **	265-47118-03-43	265-47118-03-43
29	LP Gas Burner**	228-47000-00	228-47000-00
30	LP Gas Main Burner Orifice**	234-47064-43	234-47064-43
	LP Gas High Altitude Orifice 2,001 Ft. to 7,000 Ft. (-475 model suffixes)**	234-47064-46	234-47064-46
	LP Gas High Altitude Orifice 7,001 Ft. to 10,000 Ft.**	265-51367-02-48	265-51367-02-48
31	Feedline	233-47108-04	233-47108-04
32	LP Gas Pilot Assembly**	233-46278-02	233-46278-02

* Applies to all warranties
** Inner door gasket kit recommended
*** Ordering a complete burner assembly may increase delivery time.
Please order the specific component required for the quickest delivery.
Anode may need to be cut to length; see end of this parts list for further information.
▲Order with item 19

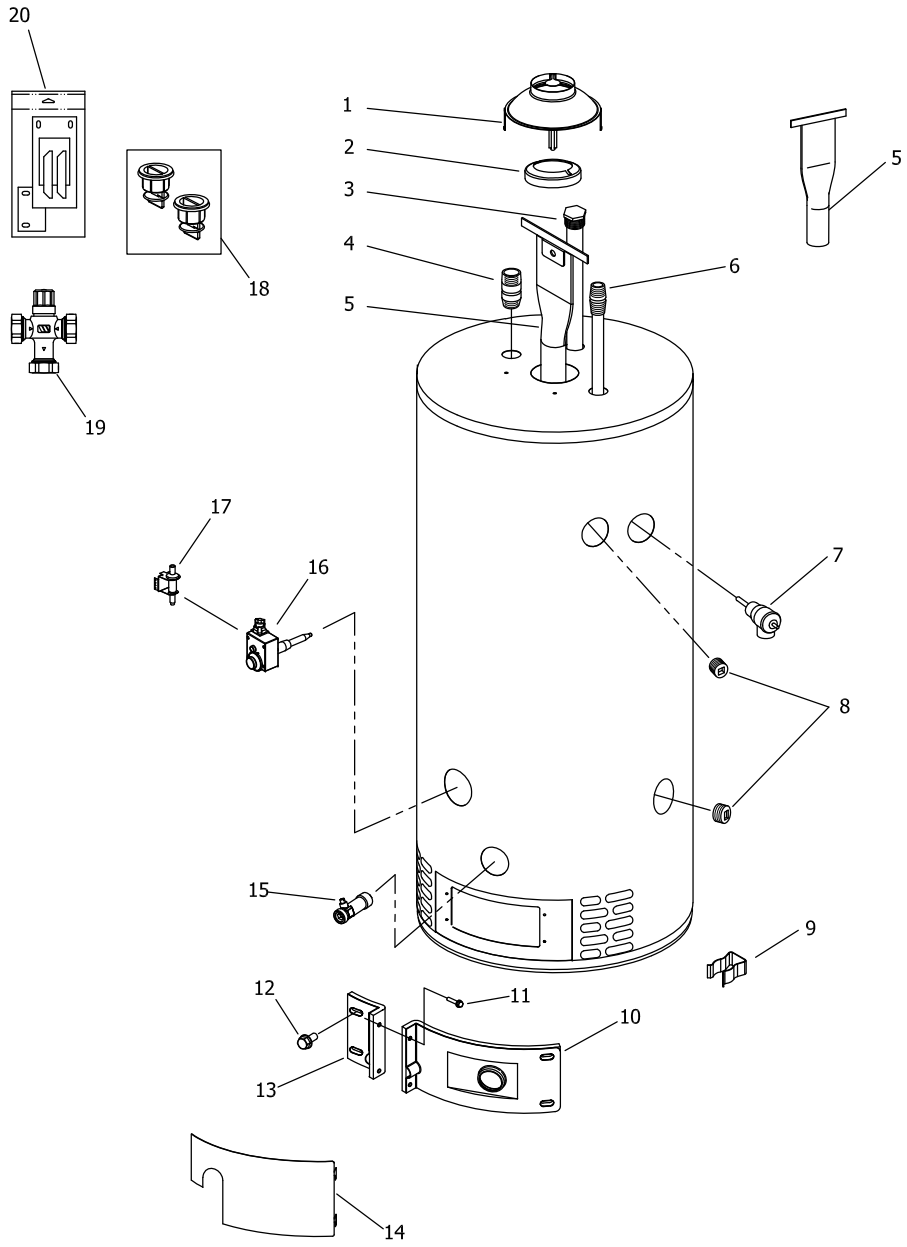

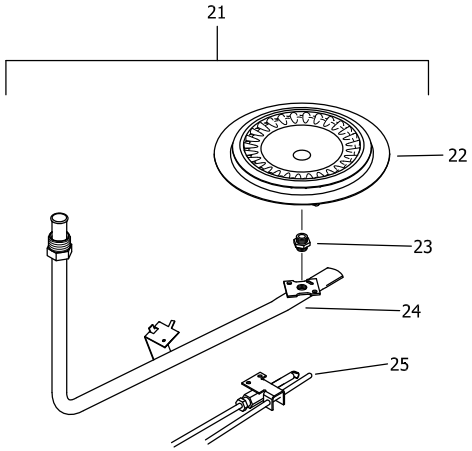

NATURAL GAS BURNER ASSEMBLY

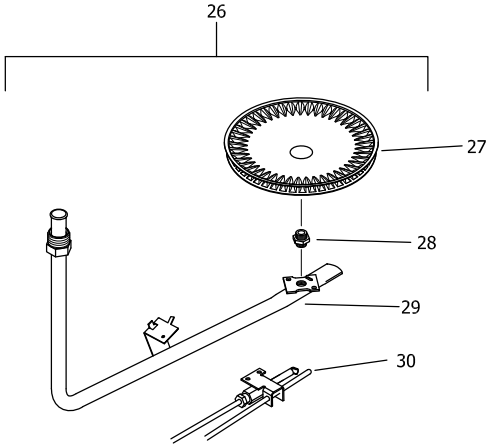

LP GAS BURNER ASSEMBLY

Item	Description	Model RG275H*(N,X)-500	Model LG275H76*(N,X)-500
1	Draft Diverter ■	239-12950-00	239-12950-00
	Draft Diverter ►	239-33081-02-20-16	239-33081-02-20-16
	Draft Diverter ▲	239-53655-00	239-53655-00
2	Flue Reducer	243-42572-00	243-42572-00
3	Hex Head Sacrificial Anode (Magnesium) ●#	415-47782-08	415-47782-08
	Hex Head Sacrificial Anode (Aluminum) ●#	415-38508-07	415-38508-07
	Hex Head Sacrificial Anode (A420 Aluminum) ●#	415-49559-04	415-49559-04
4	Outlet Nipple 1 NPT X 2 1/2"	415-50053-02	415-50053-02
5	Flue Core ►	239-50666-00	239-50666-00
	Flue Core ▲	239-53137-00	239-53137-00
6	Cold Water Inlet Dip Tube (Polysulfone)	415-47040-01	415-47040-01
7	T&P Relief Valve	415-40594-02	415-40594-02
8	3/4 NPT Pipe Plug	239-11638-00	239-11638-00
9	Feedline Clip	239-47475-00	239-47475-00
10	Right Side Inner Door Complete	239-47504-22	239-47504-22
11	Screw-#8-15 x 3/4 INHXWS	239-44195-00	239-44195-00
12	Screw-#10-12 x 3/4 HWH	239-52581-00	239-52581-00
13	Left Side Inner Door Complete	239-43968-20	239-43968-20
14	Outer Door	239-43962-00	239-43962-00
15	Brass Drain Valve	415-42351-02	415-42351-02
16	Gas Control Direct Replacement (Natural Gas)	415-40251-03	415-46365-02
	Gas Control Direct Replacement (LP Gas)	415-40258-03	415-46366-02
17	Piezo Igniter Kit	243-43450-00	243-43450-00
18	Kit-Heat Trap Insert (Inlet & Outlet)	265-51572-00	265-51572-00
19	ASSE Approved Mixing Valve (Optional)	239-51778-00	239-51778-00
20	Inner Door Gasket Kit	239-47792-00	239-47792-00
	Natural Gas Burner Assembly		
21	Nat Gas Burner Assembly Complete***	265-47767-02-22	265-47767-02-22
22	Nat. Gas Burner **	228-47000-00	228-47000-00
23	Nat. Gas Main Burner Orifice 0 Ft. to 2,000 Ft.**	234-41034-22	234-41034-22
	Nat. Gas High Altitude 2,001 Ft. to 7000 Ft. (-475 model suffixes) **	234-41034-27	234-41034-27
	Nat. Gas High Altitude Kit 7,001 Ft. to 10,000 Ft.	265-51311-01-29	265-51311-01-29
24	Feedline **	233-48095-04	233-48095-04
25	Nat. Gas Pilot Assembly **	233-41062-03	233-41062-03
	LP Gas Burner Assembly		
26	LP Gas Burner Assembly Complete***	265-47768-02-38	265-47768-02-38
27	LP Gas Burner **	228-46938-00	228-46938-00
28	LP Gas Main Burner Orifice 0 Ft. to 2,000 Ft.**	234-47064-38	234-47064-38
	LP Gas High Altitude 2,001 Ft. to 7,000 Ft. (-475 model suffixes) **	234-47064-42	234-47064-42
	LP Gas High Altitude Kit 7,001 Ft. to 10,000 Ft.	265-51367-03-44	265-51367-03-44
29	Feedline **	233-47677-04	233-47677-04
30	LP Gas Pilot Assembly **	233-41063-03	233-41063-03
	LP to Nat. Gas Conversion Kit	265-45754-02	265-45754-07
	LP to Nat. Gas High Altitude Converstion Kit	265-45754-05	265-45754-05

■ For serial numbers starting before "TA42690692"
► For serial numbers starting with "TA42693470" to "XE47931831"
▲ For serial numbers starting with or after "XE47931831"

Anode may need to be cut to length; see end of this parts list for further information.
* Applies to all warranties
** Inner door gasket kit recommended
*** Ordering a complete burner assembly may increase delivery time.
Please order the specific component required for the quickest delivery.
● Order with item 18

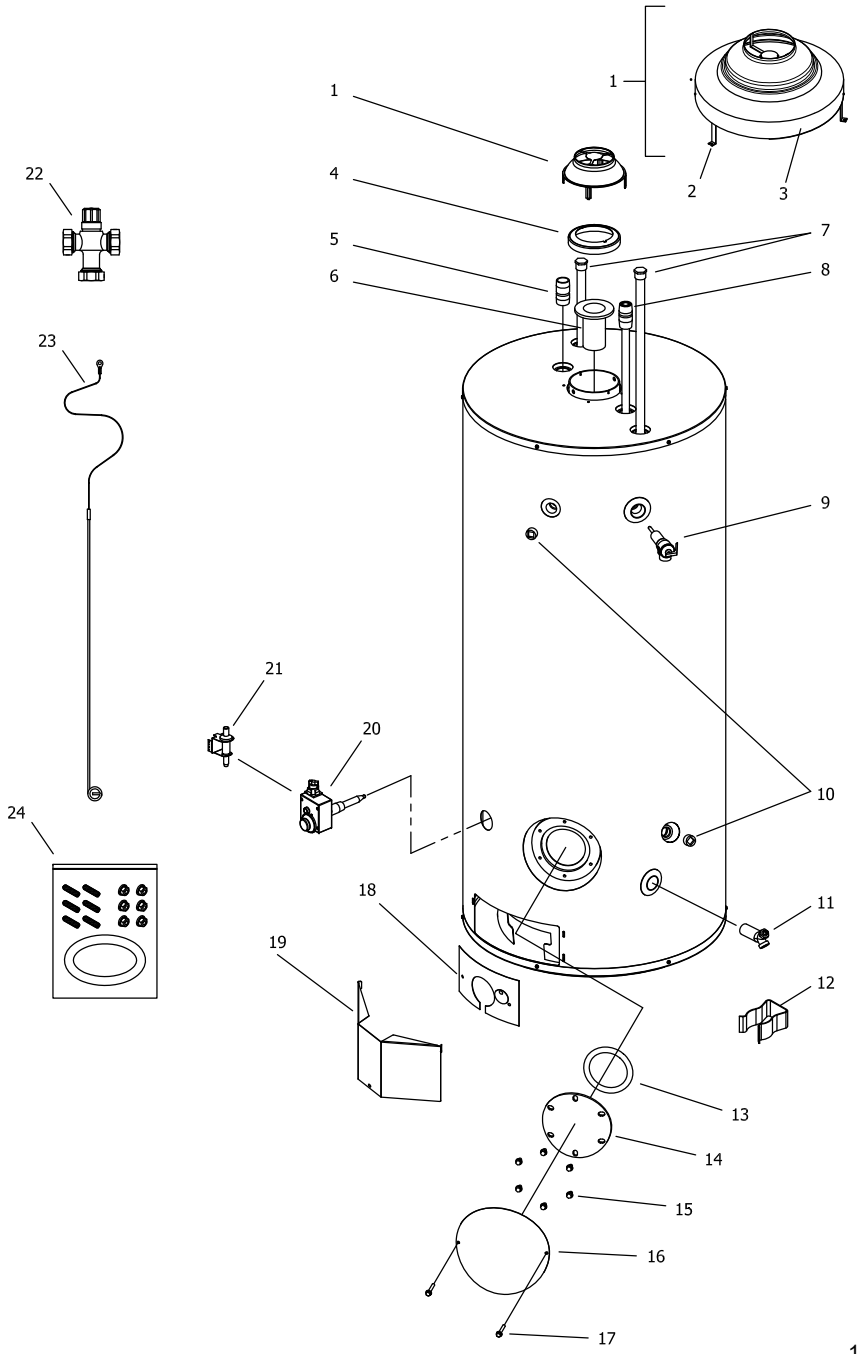

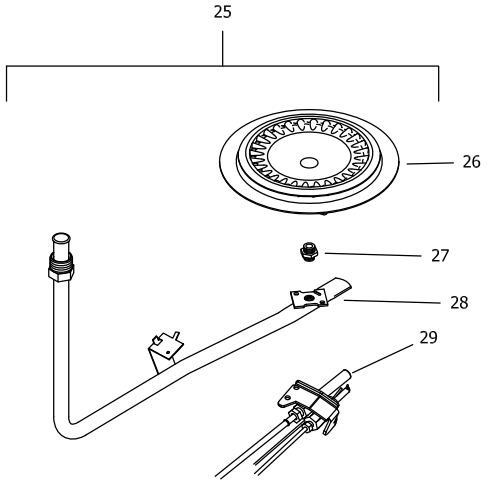

NATURAL GAS (BN) BURNER ASSEMBLY

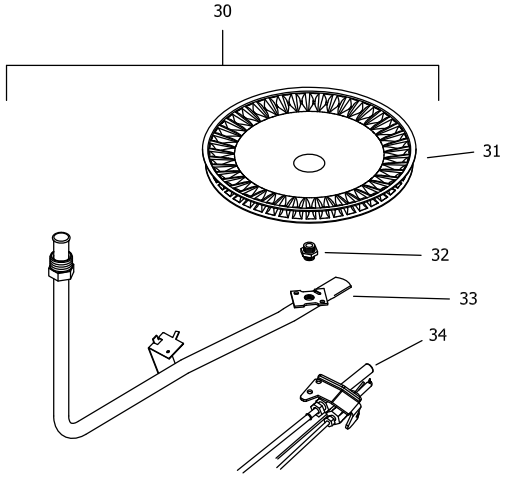

LP GAS (SX) BURNER ASSEMBLY

Item	Description	Model RG2100H*(N,X)-500	Model LG2100H*85(N,X)-500
1	Draft Diverter Assembly Kit ►	265-52089-00	265-52089-00
2	Draft Diverter Leg Kit Only►	243-43689-03	243-43689-03
3	Draft Diverter Only►	239-52089-00-16	239-52089-00-16
4	Flue Reducer	243-36920-00	243-36920-00
5	Outlet Nipple	229-40913-03	229-40913-03
6	Flue Core ►	239-52063-00	239-52063-00
7	Hex Head Sacrificial Anode (x2) (Magnesium) #	415-47782-08	415-47782-08
	Hex Head Sacrificial Anode (x2) (Aluminum) #	415-38508-07	415-38508-07
	Hex Head Sacrificial Anode (x2) (A420 Aluminum) #	415-49559-04	415-49559-04
8	Cold Water Inlet Dip Tube (Polysulfone)	415-46993-01	415-46993-01
9	T&P Relief Valve	415-40594-02	415-40594-02
10	3/4 NPT Pipe Plug	239-11638-00	239-11638-00
11	Brass Drain Valve	415-42351-02	415-42351-02
12	Feedline Clip	239-47475-00	239-47475-00
13	Cleanout O-Ring Gasket	205-18427-00	205-18427-00
14	Cleanout Cover	205-18428-00	205-18428-00
15	Cleanout Screw 5/16-18x1/2 hex (x6)	239-82166-00	239-82166-00
16	Cleanout Jacket Cover	243-20299-00	243-20299-00
17	Cleanout Jacket Cover Screw 1/2-13x1 1/4 (x2)	239-43251-00	239-43251-00
18	Inner Door Complete	243-39207-00	243-39207-00
19	Outer Door	243-37177-00	243-37177-00
20	Gas Control Direct Replacement (Natural Gas)	415-40251-07	415-46365-04
	Gas Control Direct Replacement (LP Gas)	415-40258-06	265-46366-03
21	Piezo Igniter Kit	243-43450-00	243-43450-00
22	ASSE Approved Mixing Valve (Optional)	239-51778-00	239-51778-00
23	Match Holder with Cable	239-39336-00	239-39336-00
24	Kit-Cleanout (Not for Use With ASME Tanks)	415-54256-00	415-54256-00
	Natural Gas Burner Assembly		
25	Nat Gas Burner Assembly Complete***	265-52047-00-18	265-52047-00-18
26	Nat. Gas Burner **	228-52013-00	228-52013-00
27	Nat. Gas Main Burner Orifice 0 Ft. to 2,000 Ft.**	234-41034-18	234-41034-18
	Nat. Gas High Altitude 2,001 Ft. to 7000 Ft. (-475 model suffixes) **	234-41034-22	234-41034-22
	Nat. Gas High Altitude Kit 7,001 Ft. to 10,000 Ft.	265-51311-03-27	265-51311-03-27
28	Feedline **	233-48209-01	233-48209-01
29	Nat. Gas Pilot Assembly **	233-40248-05	233-40248-05
	LP Gas Burner Assembly		
30	LP Gas Burner Assembly Complete***	265-47013-01-35	265-47131-01-35
31	LP Gas Burner **	228-46938-00	228-46938-00
32	LP Gas Main Burner Orifice 0 Ft. to 2,000 Ft.**	234-47064-35	234-47064-35
	LP Gas High Altitude 2,001 Ft. to 7,000 Ft. (-475 model suffixes) **	234-47064-39	234-47064-39
	LP Gas High Altitude Kit 7,001 Ft. to 10,000 Ft.	265-51367-01-42	265-51367-01-42
33	Feedline **	233-47065-02	233-47065-02
34	LP Gas Pilot Assembly **	233-40261-03	233-41063-03
	LP to Nat. Gas Conversion Kit	265-53403-02	265-53403-01
	LP to Nat. Gas High Altitude Converstion Kit	265-53403-12	265-53403-12

■ For serial numbers starting before "ND"
► For serial numbers starting with or after "ND"
Anode may need to be cut to length; see end of this parts list for further information.
* Applies to all warranties
** Inner door gasket kit recommended
*** Ordering a complete burner assembly may increase delivery time.
Please order the specific component required for the quickest delivery.

Reference Chart of Anode Length by Model

Model	AOD Anode Cut Length (End to end)		Hex Head Anode Cut Length (End to end)	
	Inches	Millimeters	Inches	Millimeters
RG250H*(N,X)	47.63	1210	---	---
LG250H65*(N,X)	47.63	1210	---	---
RG155H*(N,X)	43.63	1108	40	1016
LG155H80*(N,X)	43.63	1108	40	1016
RG255H*(N,X)	43.63	1108	40	1016
LG255H80*(N,X)	43.63	1108	40	1016
RG275H*(N,X)	---	---	43.5	1105
LG275H76*(N,X)	---	---	43.5	1105
RG2100H*(N,X)	---	---	47	1194
LG2100H*85(N,X)	---	---	47	1194

BRADFORD WHITE®
WATER HEATERS

United States

Sales	800-523-2931
Technical Support	800-334-3393
Email	*techserv@bradfordwhite.com*
Warranty	800-531-2111
Email	*warranty@bradfordwhite.com*
Service Parts	800-538-2020
Email	*parts@bradfordwhite.com*

Canada

Sales & Technical Support	866-690-0961 905-203-0600
Fax	905-636-0666
Warranty	*bwccwarranty@bradfordwhite.com*
Technical Support	*bwcctech@bradfordwhite.com*
Service Parts	*orders@bradfordwhitecanada.com*
Orders	*ca.orders@bradfordwhite.com*

For U.S. and Canada field service,
contact your professional installer or
local Bradford White sales representative.

International

General Contact *international@bradfordwhite.com*

©2022, Bradford White Corporation, USA. All rights reserved. **www.bradfordwhite.com**