BRADFORD WHITE®
WATER HEATERS

RESIDENTIAL CONDENSING REPLACEMENT PARTS LIST

Power Vent Models

Models Covered:
RC2PV50H*N
LC2PV50H7*N
RC2PV50H*X
LC2PV50H7*X
***Denotes warranty year**

Effective: November, 2023
ECO 8697

NOTE: BOTH MODEL AND SERIAL NUMBERS ARE REQUIRED FOR ORDERING REPLACEMENT PARTS

Dimensions and specifications subject to change without notice.

WARNING
CANCER AND REPRODUCTIVE HARM
WWW.P65WARNINGS.CA.GOV

As required by the state of California Proposition 65.

Save this manual for future reference

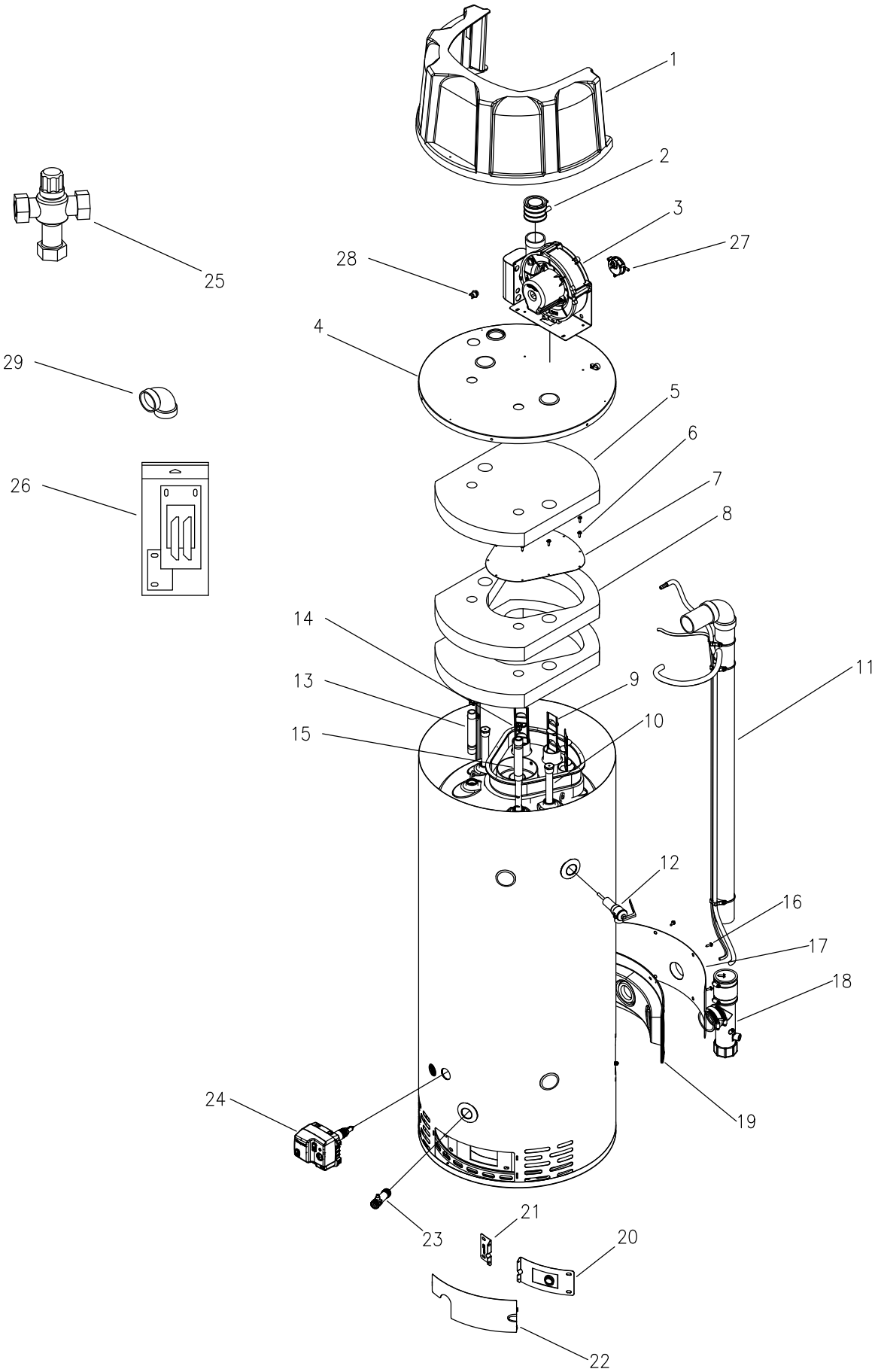

BRADFORD WHITE
WATER HEATERS

Item	Description	Model RC2PV50H6N	Model LC2PV50H763N	Model RC2PV50H6X	Model LC2PV50H763X
1	Surround	239-50864-00	239-50864-00	239-50864-00	239-50864-00
2	2" Exhaust Adapter	239-50874-00	239-50874-00	239-50874-00	239-50874-00
3	Blower	239-50844-00	239-50844-00	239-50844-00	239-50844-00
	Blower (Hi-Alt)	239-51740-00	239-51740-00	239-51740-00	239-51740-00
4	Jacket Head	239-50847-00	239-50847-00	239-50847-00	239-50847-00
5	Jacket Head Insulation	226-50839-00	226-50839-00	226-50839-00	226-50839-00
6	Screw #8-18 x 1/2 (qty. 10)	239-32761-00	239-32761-00	239-32761-00	239-32761-00
7	Flue Collector Assembly	239-50849-00	239-50849-00	239-50849-00	239-50849-00
8	Collector Insulation (qty. 2)	226-50841-00	226-50841-00	226-50841-00	226-50841-00
9	Flue Baffle	239-50826-00	239-50826-00	239-50826-00	239-50826-00
10	Hex Head Anode (A420 Aluminum) (qty. 2) #	415-49559-04	415-49559-04	415-49559-04	415-49559-04
11	Vent Pipe Assembly	239-50846-01	239-50846-01	239-50846-01	239-50846-01
	Intake Assembly	239-53268-00	239-53268-00	239-53268-00	239-53268-00
12	T&P Relief Valve	415-40594-02	415-40594-02	415-40594-02	415-40594-02
13	Hot Water Outlet Nipple	229-32762-28	229-32762-28	229-32762-28	229-32762-28
14	Heat Trap Insert Kit (qty. 2)	265-45420-00	265-45420-00	265-45420-00	265-45420-00
15	Cold Water Inlet Polysulfone	229-45092-10	229-45092-11	229-45092-10	229-45092-11
16	Screw #10-12 x 3/4" (qty. 8)	239-52581-00	239-51224-00	239-51224-00	239-51224-00
17	Exhaust Cover	239-51632-00	239-51632-00	239-51632-00	239-51632-00
18	Condensate Tee	239-54723-00	239-54723-00	239-54723-00	239-54723-00
19	Exhaust Gasket	239-50854-00	239-50854-00	239-50854-00	239-50854-00
20	Right Side Inner Door*	239-45642-20	239-45642-20	239-45642-20	239-45642-20
21	Left Side Inner Door*	239-43968-20	239-43968-20	239-43968-20	239-43968-20
22	Outer Door	243-43962-00	243-43962-00	243-43962-00	243-43962-00
23	Brass Drain Valve	415-42351-02	415-42351-02	415-42351-02	415-42351-02
24	Gas Valve	239-48795-02	239-48795-04	239-48796-02	239-48796-04
25	ASSE Approved Mixing Valve (Optional)	239-51778-00	239-51778-00	239-51778-00	239-51778-00
26	Inner Door Gasket Kit	239-44078-00	239-44078-00	239-44078-00	239-44078-00
27	Pressure Switch (-1.70" W.C. ±0.06)	415-51233-01	415-51233-01	415-51233-01	415-51233-01
	Pressure Switch (Hi-Alt) (-1.30" W.C. ±0.06)	239-51233-02	239-51233-02	239-51233-02	239-51233-02
28	Blower Temperature Switch	415-48752-00	415-48752-00	415-48752-00	415-48752-00
29	2" Vent Elbow	239-51794-00	239-51794-00	239-51794-00	239-51794-00

* Inner door gasket kit recommended
Order the specific component required for the quickest delivery.
\# Anode may need to be cut to length

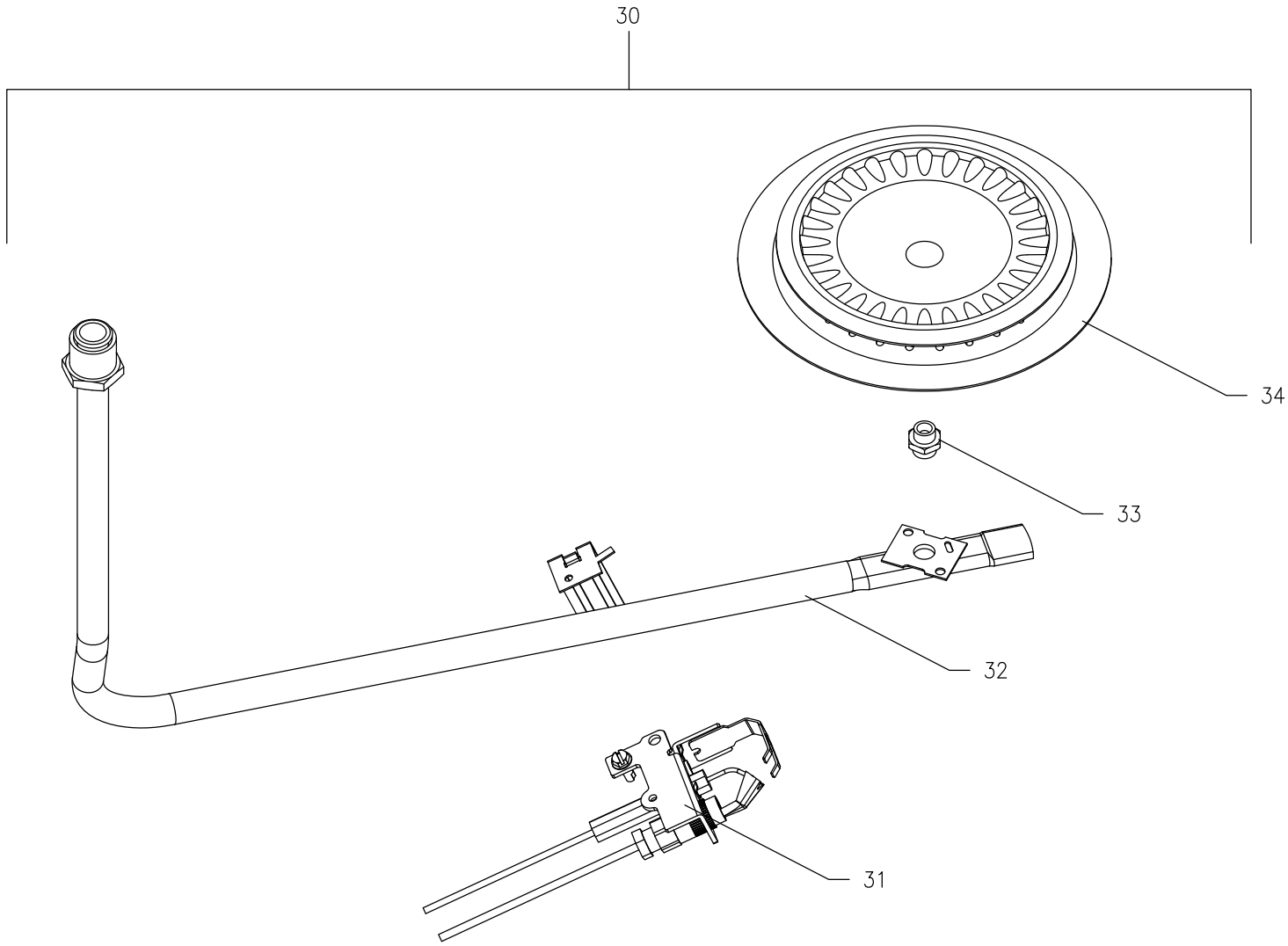

BRADFORD WHITE
WATER HEATERS

Item	Description	Model RC2PV50H6N	Model LC2PV50H763N	Model RC2PV50H6X	Model LC2PV50H763X
30	Burner Assembly**	265-47784-04-21	265-47784-04-21	265-47376-04-40	265-47376-04-40
	Burner Assembly High Altitude 2,001 Ft. to 7,000 Ft. (-475 model suffixes)**	265-47784-04-26	265-47784-04-26	265-47376-04-42	265-47376-04-42
31	Pilot*	415-45653-05	415-45653-05	415-45653-05	415-45653-05
32	Feedline*	233-47374-05	233-47374-05	233-47672-05	233-47672-05
33	Orifice*	234-41034-21	234-41034-21	234-47064-40	234-47064-40
	High Altitude Orifice 2,001 Ft. to 7,000 Ft. (-475 model suffixes)**	234-41034-26	234-41034-26	234-47064-42	234-47064-42
34	Burner*	228-42506-00	228-42506-00	228-47000-00	228-47000-00

* Inner door gasket kit recommended

** Ordering a complete burner assembly may increase delivery time.

Reference Chart of Anode Length by Model

Model	Hex Head Anode Cut Length (End to end)	
	Inches	Millimeters
RC2PV50H6N	35	889
LC2PV50H763N	35	889
RC2PV50H6X	35	889
LC2PV50H763X	35	889

BRADFORD WHITE®
WATER HEATERS

United States

Sales	1-800-523-2931
Technical Support	1-800-334-3393
Email	*techsupport@bradfordwhite.com*
Warranty	1-800-531-2111
Email	*warranty@bradfordwhite.com*
Service Parts	1-800-538-2020
Email	*parts@bradfordwhite.com*

Canada

Sales	1-866-690-0961 1-905-203-0600
Fax	905-636-0666
Warranty	1-800-531-2111
Email	*warranty@bradfordwhite.com*
Technical Support	1-800-334-3393
Email	*techsupport@bradfordwhite.com*
Orders	*ca.orders@bradfordwhite.com*
Service Parts	*bwccwarranty@bradfordwhite.com*

For U.S. and Canada field service, contact your professional installer or local Bradford White sales representative.

International

General Contact	*international@bradfordwhite.com*

©2023, Bradford White Corporation, USA. All rights reserved.

www.bradfordwhite.com