GLOBAL LEADER IN PIPE PLUG & TESTING

PNEUMATIC PLUGS

MECHANICAL PLUGS

GAUGES

TOOLS & ACCESSORIES

TESTING EQUIPMENT

TEST WITH THE BEST

CHERNE
TABLE OF CONTENTS

PNEUMATIC PLUGS

BLOCKING PLUGS

5 PLUMBING TEST-BALL® PLUGS
6 LONG TEST-BALL® • MS2® TEST-BALL® PLUGS
7 CLEAN-SEAL® PLUGS
9 TEST-BALL® PLUGS – UNDERGROUND
10 I-SERIES TEST-BALL® PLUGS
12 PILLOW-STYLE TEST-BALL® PLUGS
13 REMO® REMOTE PLACEMENT PLUGS

BYPASS PLUGS

14 ORIGINAL MUNI-BALL® PLUGS
16 BIG MOUTH® FLOW-THROUGH PLUGS
19 I-SERIES MUNI-BALL® PLUGS

SEWER AIR TEST PLUGS

21 AIR-LOC® & I-SERIES LEAK LOCATOR PLUGS
23 PROTECTIVE SLEEVES
24 RUPTURE DISC & DUAL STAGE PRESSURE RELIEF VALVE (PRV)
25 HIGH PRESSURE PLUGS

MECHANICAL PLUGS

27 ORIGINAL GRIPPER®
28 HUB-FIT GRIPPER® • CLEAN-OUT GRIPPER®
29 T-HANDLE GRIPPER®
30 IRON GRIP
31 ECON-O-GRIP® • PETRO ECON-O-GRIP®
32 SURE-GRIP® • KWIK 'N SURE®
33 MONITOR-WELL PLUGS
34 TEST-KAP™

DEFLECTION GAUGES

37 FIXED STEEL DEFLECTION GAUGES
39 ALUMINUM DEFLECTION GAUGE KITS
40 ALUMINUM DEFLECTION GAUGE FIN SETS
42 CORE MANDRELS • PROVING RINGS

TESTING EQUIPMENT

45 AIR-LOC® PRESSURE TESTING
47 AIR-LOC® TESTING PANEL
48 AIR-LOC® PRESSURE TESTING HOSES
49 MANHOLE JACKS • ROLLERS • WINCH
50 AIR-LOC® PRESSURE TESTING PROCEDURE
51 AIR-LOC® MANHOLE TESTERS
52 AIR-LOC® VACUUM EQUIPMENT
53 AIR-LOC® STRINGER • VENTILATORS
54 AIR-LOC® SMOKE TESTING
55 AIR-LOC® JOINT TESTERS
56 AQUA-LOC® HYDROSTATIC TEST PUMPS

TOOLS & ACCESSORIES

61 TEST PUMPS • MANOMETER • CLOG-BUSTER
62 POINT REPAIR CARRIER
63 EXTENSION HOSES • TUB PLUGS
64 TEST GAUGES • CHAIN ASSEMBLIES
65 POLY-LIFT LINES
66 JET-BALL™

TECHNICAL DATA

69 CONVERSION CHARTS • TESTING METHODS

PNEUMATIC PLUGS

PNEUMATIC PLUGS

BLOCKING PLUGS

5 PLUMBING TEST-BALL® PLUGS
6 LONG TEST-BALL® • MS2® TEST-BALL® PLUGS
7 CLEAN-SEAL® PLUGS
9 TEST-BALL® PLUGS – UNDERGROUND
10 I-SERIES TEST-BALL® PLUGS
12 PILLOW-STYLE TEST-BALL® PLUGS
13 REMO® REMOTE PLACEMENT PLUGS

BYPASS PLUGS

14 ORIGINAL MUNI-BALL® PLUGS
16 BIG MOUTH® FLOW-THROUGH PLUGS
19 I-SERIES MUNI-BALL® PLUGS

SEWER AIR TEST PLUGS

21 AIR-LOC® & I-SERIES LEAK LOCATOR PLUGS
23 PROTECTIVE SLEEVES
24 RUPTURE DISC
25 HIGH PRESSURE PLUGS

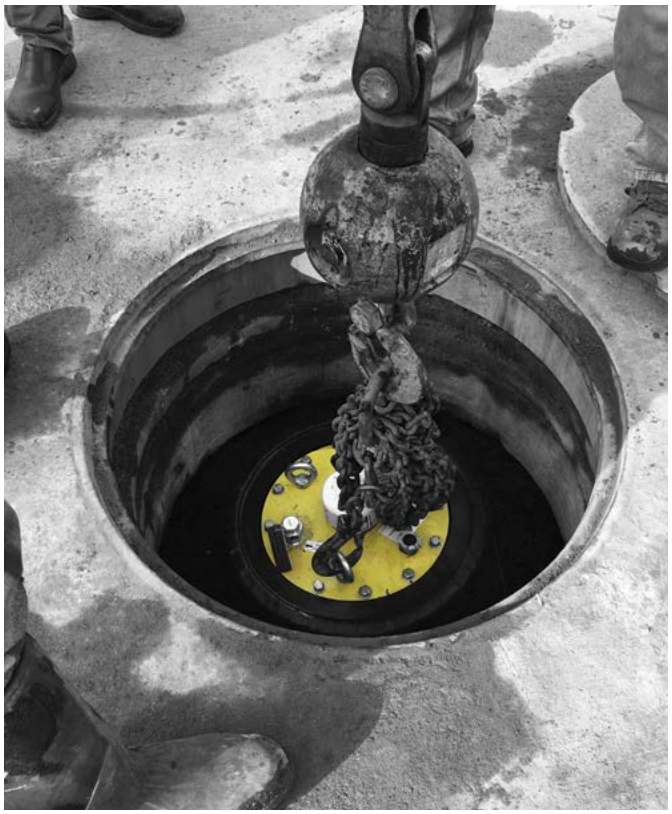

PLUMBING TEST-BALL® PLUGS

Cherne Plumbing Test Ball® Plugs were first introduced in 1953 as a more versatile product than traditional mechanical plugs. Designed to test drain, vent and waste systems Cherne Test Ball® Plugs could be used in any type of pipe, could be inserted through a test tee, and sealed out of round pipe as well.

Cherne introduced the multi-size yellow-top Test Ball® plugs in 2002. These test ball plugs have the same great features found in the original test ball plugs, but can be used in more than one pipe size.

Features:

- Natural Rubber: Great sealing properties as well as excellent expansion and memory
- Schrader Valve Inflator: Includes cap with valve core tightener
- Ring and Chain Assembly: Prevents plug from dropping into DWV system during test

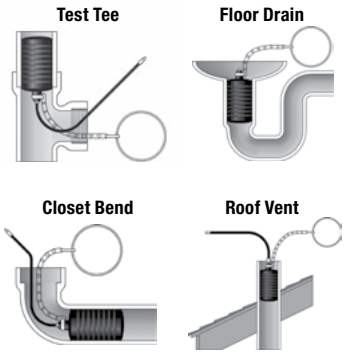

ORIGINAL TEST-BALLS

PART NUMBER	NOMINAL SIZE	USAGE RANGE	MAXIMUM BACK PRESSURE		INFLATION PRESSURE	PRODUCT WEIGHT	DEFLATED LENGTH	DEFLATED DIAMETER
270008	.75" - 1.25" (20-30 mm)	.75"-1.30" (20-33 mm)	17 psi (1,2 bar)	40 ft. (12 M)	65 psi (4,5 bar)	3.5 oz (0.1 kg)	3.75" (95 mm)	0.73" (18.5 mm)
270016	1.25" - 1.5" (35-40 mm)	1.17"-1.75" (30-44 mm)	13 psi (0,9 bar)	30 ft. (9.1 M)	40 psi (2,8 bar)	3.5 oz (0.1 kg)	5.5" (141 mm)	1.1" (31 mm)
270024	2" (50 mm)	1.9"-2.25" (48-57 mm)	13 psi (0,9 bar)	30 ft. (9.1 M)	40 psi (2,8 bar)	3.5 oz (0.1 kg)	2.84" (72 mm)	1.77" (45 mm)
270108	2.5" (65 mm)	2.34"-2.75" (48-70 mm)	13 psi (0,9 bar)	30 ft. (9.1 M)	35 psi (2,4 bar)	6.5 oz (0.2 kg)	4.5" (114 mm)	2.3" (59 mm)
270032	3" (75 mm)	2.77"-3.25" (70-83 mm)	13 psi (0,9 bar)	30 ft. (9.1 M)	35 psi (2,4 bar)	6.5 oz (0.2 kg)	5.25" (132 mm)	2.64" (67 mm)
270040	4" (100 mm)	3.41"-4.25" (87-108 mm)	13 psi (0,9 bar)	30 ft. (9.1 M)	30 psi (2,1 bar)	9 oz (0.25 kg)	6.5" (163 mm)	3.25" (83 mm)
270059	5" (125 mm)	4.6"-5.25" (117-133 mm)	13 psi (0,9 bar)	30 ft. (9.1 M)	30 psi (2,1 bar)	1.3 lbs (0.6 kg)	7.75" (200 mm)	4.5" (114 mm)
270067	6" (150 mm)	5.44"-6.25" (138-159 mm)	13 psi (0,9 bar)	30 ft. (9.1 M)	30 psi (2,1 bar)	1.9 lbs (0.85 kg)	9.00" (230 mm)	5.25" (135 mm)

MULTI SIZE TEST-BALLS

PART NUMBER	NOMINAL SIZE	USAGE RANGE	MAXIMUM BACK PRESSURE		INFLATION PRESSURE	PRODUCT WEIGHT	DEFLATED LENGTH	DEFLATED DIAMETER
276128	1.25" - 2" (35-50 mm)	1.25"-2.10" (32-53 mm)	17 psi (1,2 bar)	40 ft. (12 M)	40 psi (2,8 bar)	3.7 oz (0.11 kg)	5.56" (141 mm)	1.21" (31 mm)
276238	2" - 3" (50-75 mm)	1.9"-3.1" (48-80 mm)	17 psi (1,2 bar)	40 ft. (12 M)	35 psi (2,4 bar)	4.7 oz (0.13 kg)	5.57" (141 mm)	1.78" (45 mm)
276348	3" - 4" (75-100 mm)	2.8"-4.25" (70-108 mm)	17 psi (1,2 bar)	40 ft. (12 M)	40 psi (2,8 bar)	7.8 oz (0.22 kg)	5.18" (132 mm)	2.64" (67 mm)
276468	4" - 6" (100-150 mm)	3.4"-6.25" (87-155 mm)	17 psi (1,2 bar)	40 ft. (12 M)	30 psi (2,1 bar)	1.4 lbs (0.62 kg)	9.47" (241 mm)	3.28" (83 mm)

ALWAYS BLOCK PLUGS WHEN CONDUCTING AIR TESTS.

LONG TEST-BALL® • MS2® TEST-BALL® PLUGS

Cherne's Long Test-Ball® plugs are designed for waste stack testing—sealing the rise and the run to perform the test. These long ball plugs can also be used to seal the wye to conduct sewer air tests. Molded-in sealing ribs at each end of the plug ensure a leak-free seal.

Long Test-Ball® Plug ("The Original") Features:

- Ring and chain assembly keeps plug from entering line during deflation
- Includes 3' extension hose

MS2® Long Test-Ball® Plug Features:

- Multi-size design for use in various pipe diameters
- Multi-stage design eliminates backsplash
- Integrated relief valve reduces the possibility of over-inflation
- Nylon strap and handle keeps plug from entering line during deflation
- Includes 5' extension hose

LONG TEST-BALL

PART NUMBER	NOMINAL SIZE	USAGE RANGE	MAXIMUM BACK PRESSURE		INFLATION PRESSURE	PRODUCT WEIGHT	DEFLATED LENGTH	DEFLATED DIAMETER
271020	2" (50 mm)	1.75"-2.25" (44-57 mm)	13 psi (0,9 bar)	30 ft. (9.1 M)	45 psi (3,1 bar)	1.1 lbs (0.51 kg)	18.25" (464 mm)	1.5" (38 mm)
271039	3" (75 mm)	2.75"-3.25" (70-83 mm)	13 psi (0,9 bar)	30 ft. (9.1 M)	35 psi (2,4 bar)	1.88 lbs (0.85 kg)	20.75" (527 mm)	2.31" (59 mm)
271047	4" (100 mm)	3.5"-4.25" (89-108 mm)	13 psi (0,9 bar)	30 ft. (9.1 M)	30 psi (2,1 bar)	2.31 lbs (1.04 kg)	24.75" (629 mm)	2.5" (64 mm)
271098	4" - 6" (100-150 mm)	3.25"-6.25" (83-159 mm)	13 psi (0,9 bar)	30 ft. (9.1 M)	45 psi (3,1 bar)	4 lbs (1.81 kg)	28.5" (724 mm)	3.0" (76 mm)
271063	6" (150 mm)	5.5"-6.25" (140-159 mm)	13 psi (0,9 bar)	30 ft. (9.1 M)	30 psi (2,1 bar)	5.3 lbs (2.41 kg)	28.25" (718 mm)	4.12" (105 mm)

MS2 LONG TEST-BALL

PART NUMBER	NOMINAL SIZE	USAGE RANGE	MAXIMUM BACK PRESSURE		INFLATION PRESSURE	PRODUCT WEIGHT	DEFLATED LENGTH	DEFLATED DIAMETER
274518	2" - 3" (50-75 mm)	1.75"-3.25" (44-83 mm)	13 psi (0,9 bar)	30 ft. (9.1 M)	40 psi (2,8 bar)	1.31 lbs (0.5 kg)	19.44" (494 mm)	1.58" (37 mm)
274526	3" - 4" (75-100 mm)	2.75"-4.25" (70-108 mm)	13 psi (0,9 bar)	30 ft. (9.1 M)	40 psi (2,8 bar)	2.45 lbs (1.1 kg)	23.75" (603 mm)	2.38" (60 mm)
274534	4" - 6" (100-150 mm)	3.5"-6.25" (89-159 mm)	13 psi (0,9 bar)	30 ft. (9.1 M)	30 psi (2,1 bar)	3.91 lbs (1.41 kg)	26.62" (676 mm)	3.25" (83 mm)

Long Test-Ball® & MS2® Long Test-Ball® plugs seals lateral during sewer air test

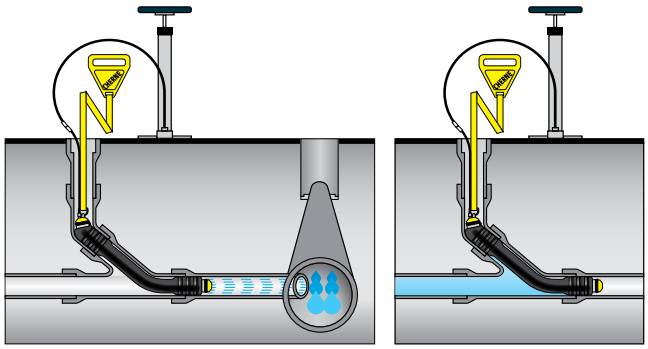

MS2® Long Test-Ball® Plugs Top inflates first, deflates last; no backsplash

ALWAYS BLOCK PLUGS WHEN CONDUCTING AIR TESTS.

CLEAN-SEAL® PLUGS

Designed for stack testing of drain, waste, and vent plumbing systems, Clean-Seal® plugs thread into a standard test tee. The bladder is inflated and then water is introduced into the pipe. Upon test completion, deflate the bladder; water travels down the pipe, eliminating test water backsplash.

Features:

- Works in both plastic and cast-iron test tees
- Natural rubber body provides a leak-free seal
- High-impact ABS threads for maximum durability
- Removable/replaceable tire inflation valve fitting

CLEAN-SEAL

PART NUMBER	NOMINAL SIZE	MAXIMUM BACK PRESSURE		INFLATION PRESSURE	PRODUCT WEIGHT	DEFLATED LENGTH	DEFLATED DIAMETER	INFLATION THREAD
271508	**1.5"** (40 mm)	13 psi (0,9 bar)	30 ft. (9.1 M)	30 psi (2,1 bar)	.15 lbs (0.07 kg)	4.75" (121 mm)	1.5" (38 mm)	1/8"
271705	2" (50 mm)	13 psi (0,9 bar)	30 ft. (9.1 M)	35 psi (2,4 bar)	.3 lbs (0.14 kg)	5.81" (150 mm)	2.38" (60 mm)	1/8"
271713	3" (75 mm)	13 psi (0,9 bar)	30 ft. (9.1 M)	35 psi (2,4 bar)	.8 lbs (0.36 kg)	7.38" (188 mm)	3.5" (89 mm)	1/4"
271721	4" (100 mm)	13 psi (0,9 bar)	30 ft. (9.1 M)	35 psi (2,4 bar)	1.3 lbs (0.59 kg)	8.5" (215 mm)	4.5" (115 mm)	1/4"
271758	6" (150 mm)	13 psi (0,9 bar)	30 ft. (9.1 M)	25 psi (1,7 bar)	3.5 lbs (1.59 kg)	11" (280 mm)	6.63" (168 mm)	1/4"

Clean-Seal® Application

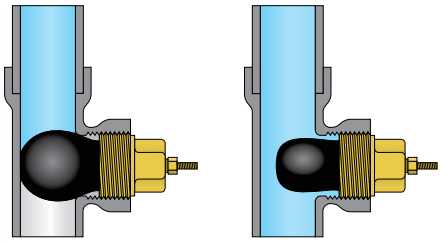

Inflated (test) Deflated (test release)

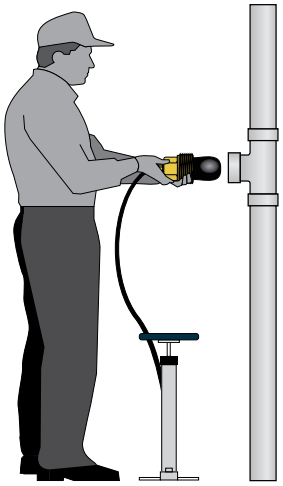

Simply thread into test tee and inflate (for maximum sealing performance, apply thread seal tape to the threads before use).

TEST-BALL® PLUGS – UNDERGROUND

Cherne's Original Single Size and Multi-Size Test Ball Plugs are our most economical pneumatic plugs for blocking flow to do maintenance in sanitary and storm sewer systems. These plugs may also be used as a back plug for sewer air tests.

All of the single-size and multi-size Test Ball plugs have eyebolts for attaching a rope or clevis for lifting and lowering the plug. And each plug also has a removable Schrader valve for easy replacement or substitution with a quick disconnect fitting.

Made from natural rubber, these plugs are tough, tear-resistant and will work on any type of pipe, including out-of-round pipe.

Blocking flow

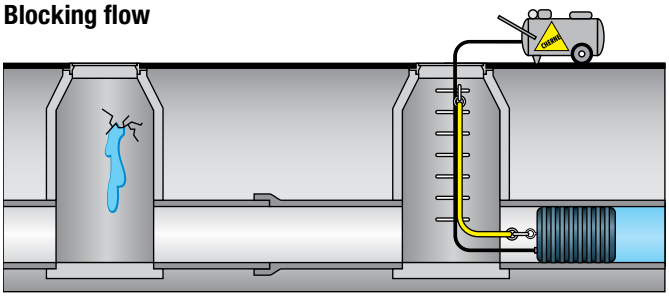

SINGLE SIZE ORIGINAL TEST BALLS

PART NUMBER	NOMINAL SIZE	USAGE RANGE	MAXIMUM BACK PRESSURE		INFLATION PRESSURE	PRODUCT WEIGHT	DEFLATED LENGTH	DEFLATED DIAMETER	INFLATION THREAD	CHAIN / EYE BOLTS
041386	8" (200 mm)	7"-8.25" (178-210 mm)	17 psi (1,2 bar)	40 ft. (12 M)	25 psi (1,7 bar)	3.4 lbs (1.6 kg)	10.25" (257 mm)	6.75" (172 mm)	1/4" (1)	3/8" (1)
041394	10" (250 mm)	9"-10.25" (229-260 mm)	17 psi (1,2 bar)	40 ft. (12 M)	25 psi (1,7 bar)	5.6 lbs (2.5 kg)	11.75" (298 mm)	8.75" (221 mm)	1/4" (1)	3/8" (1)
041408	12" (300 mm)	10.5"-12.25" (267-311 mm)	17 psi (1,2 bar)	40 ft. (12 M)	25 psi (1,7 bar)	10.9 lbs (5 kg)	13.75" (351 mm)	10.25" (262 mm)	1/4" (1)	3/8" (1)
041416	15-16" (375-400 mm)	14"-16.25" (356-413 mm)	13 psi (0,9 bar)	30 ft. (9,1 M)	25 psi (1,7 bar)	29.5 lbs (13.4 kg)	19.75" (502 mm)	13.75" (346 mm)	1/4" (1)	3/8" (2)

MULTI-SIZE ORIGINAL TEST BALLS

PART NUMBER	NOMINAL SIZE	USAGE RANGE	MAXIMUM BACK PRESSURE		INFLATION PRESSURE	PRODUCT WEIGHT	DEFLATED LENGTH	DEFLATED DIAMETER	INFLATION THREAD	CHAIN / EYE BOLTS
275048	4" - 6" (100-150 mm)	3.75"-6.25" (92-159 mm)	17 psi (1,2 bar)	40 ft. (12 M)	30 psi (2,1 bar)	2 lbs (0.91 kg)	9.8" (250 mm)	3.5" (85 mm)	1/8" (1)	1/4" (1)
275058	6" - 8" (150-200 mm)	5.25"-8.25" (135-210 mm)	17 psi (1,2 bar)	40 ft. (12 M)	30 psi (2,1 bar)	3.5 lbs (1.6 kg)	14" (356 mm)	5" (127 mm)	1/4" (1)	3/8" (1)
275088	8" - 12" (200-300 mm)	7"-12.25" (178-311 mm)	11 psi (0,75 bar)	25 ft. (8 M)	20 psi (1,4 bar)	6.63 lbs (3 kg)	16" (406 mm)	6.75" (171 mm)	1/4" (1)	3/8" (1)

ALWAYS BLOCK PLUGS WHEN CONDUCTING AIR TESTS.

I-SERIES TEST-BALL® PLUGS

The Future in Pipe Plugs is Now. I-Series Test-Ball® Plugs.

Features:

- Industry leading quality, consistency and durability
- Mechanical bonding of premium natural rubber and end plates eliminates failures from chemical bonding
- Improved performance and safety through optimized design
- Superior back pressure (15 psi, 1 bar)
- Premium performance and aesthetics
- Lightweight, short and flexible

I-SERIES PLUGS

Protective sleeves available for 12"–18" diameter and larger plugs. See page 23.

PART NUMBER	NOMINAL SIZE	USAGE RANGE	MAXIMUM BACK PRESSURE	INFLATION PRESSURE	PRODUCT WEIGHT	DEFLATED LENGTH
310088	4"-8" (100-200 mm)	3.95"-8.25" (92-210 mm)	15 PSI (1 Bar)	45 PSI (3 Bar)	3.8 lbs	23"
310128	6"-12" (150-300 mm)	5.5"-12.25" (140-310 mm)	15 PSI (1 Bar)	45 PSI (3 Bar)	7.1 lbs	25"
210128	8"-12" (200-300 mm)	7.5"-12.25" (186-310 mm)	15 PSI (1 bar)	45 PSI (3 Bar)	11 lbs	19.8"
310168	8"-16" (200-400 mm)	7.5"-16.25" (186-413 mm)	15 PSI (1 Bar)	45 PSI (3 Bar)	11.4 lbs	28"
210188	12"-18" (300-450 mm)	10.75"-18.25" (279-464 mm)	15 PSI (1 Bar)	45 PSI (3 Bar)	20.7 lbs	25"
610188	12"-18" (300-450 mm) with sleeve	10.75"-18.25" (279-464 mm)	15 PSI (1 Bar)	45 PSI (3 Bar)	38 lbs	25"
310248	12"-24" (300-600 mm)	11"-24.25" (279-616 mm)	15 PSI (1 Bar)	45 PSI (3 Bar)	26.9 lbs	37"
694248	12"-24" (300-600 mm) with sleeve	11"-24.25" (279-616 mm)	15 PSI (1 Bar)	45 PSI (3 Bar)	42.2	37"

BACK PRESSURE DATA: I-SERIES PLUGS

PLUG SIZE	PIPE DIAMETER								
	4"	6"	8"	10"	12"	16"	18"	21"	24"
4"-8"	30.0 psi	23.0 psi	15.0 psi	-	-	-	-	-	-
6"-12"	-	26.0 psi	23.0 psi	22.0 psi	15.0 psi	-	-	-	-
8"-12"	-	-	26.0 psi	23.0 psi	15.0 psi	-	-	-	-
8"-16"	-	-	29.0 psi	27.0 psi	25.0 psi	15.0 psi	-	-	-
12"-18"	-	-	-	-	25.0 psi	22.0 psi	15.0 psi	-	-
12"-24"	-	-	-	-	27.0 psi	25.0 psi	22.0 psi	19.0 psi	15.0 psi

Consult page 69 for back pressure conversion to feet of head pressure.

READ BACK HOSES WITH GAUGE

PART NUMBER	DESCRIPTION
274218	5' Hose with Gauge 3/16" ID
274228	10' Hose with Gauge 3/16" ID
274238	20' Hose with Gauge 3/16" ID
274248	30' Hose with Gauge 3/16" ID
274268	50' Hose with Gauge 3/16" ID
274298	100' Hose with Gauge 3/16" ID

ALWAYS BLOCK PLUGS WHEN CONDUCTING AIR TESTS.

Cherne's I-Series plugs were designed to meet the needs of both the US and International markets in terms of size and expansion range. Our I-Series plugs have full body cording for added durability.

I-Series Plug Features:

- Superior expansion range
- Small deflated diameters
  - All plugs up through our 24-60" size easily fit through a 24" manhole frame
  - 48–72" and 54–96" plugs fit through 36" openings

15-32" and Larger Plug Features:

- Aluminum end plates – minimizes rust/corrosion
- 3/4" eyebolts on plugs 15–32" and larger – better holding strength
- Patented field replaceable rupture discs or pressure relief valves on plugs 15–32" and larger – protects plug from over-inflation

I-SERIES PLUGS

Protective sleeves available for 12"–18" diameter and larger plugs. See page 23.

PART NUMBER	NOMINAL SIZE	USAGE RANGE	MAXIMUM BACK PRESSURE	INFLATION PRESSURE	PRODUCT WEIGHT	DEFLATED LENGTH	DEFLATED DIAMETER	INFLATION THREAD	CHAIN / EYE BOLTS
310328	15" – 32" (380 – 800 mm)	15" – 32" (380 – 800 mm)	**	25 (1,72 bar)	65 lbs (29.5 kg)	48" (1220 mm)	14.3" (363 mm)	1/4" & 1/2"	3/4" (2)
310408	20"–40" (500–1000 mm)	19"–40" (475–1000 mm)	**	22 psi (1,5 bar)	66 lbs (30 kg)	46.25" (1175 mm)	18.5" (470 mm)	1/4" & 1/2"	3/4" (2)
310488	24" – 48" (600–1200 mm)	20.5"–50" (521–1270 mm)	**	22 psi (1,5 bar)	125 lbs (57 kg)	68" (1730 mm)	19.1" (485 mm)	1/4" & 1/2"	3/4" (2)
310600	24" – 60" (600–1500 mm)	20.5"– 60.5" (520–1537 mm)	**	22 psi (1,5 bar)	140 lbs (63.6 kg)	88" (2235 mm)	19.1" (485 mm)	1/4" & 1/2"	3/4" (2)
310728	48" – 72" (1200–1800 mm)	44"–72.25" (1118–1835 mm)	**	12 psi (0,83 bar)	290 lbs (132 kg)	100" (2540 mm)	43" (1092 mm)	1/2" (2)	3/4" (3)
310968	54" – 96" (1400–2400 mm)	54"–96.25" (1400–2450 mm)	**	11 psi (0,75 bar)	500 lbs (228 kg)	128" (3200 mm)	50" (1270 mm)	1/2" (2)	3/4" (3)

**** Consult back pressure table below.**

BACK PRESSURE DATA: I-SERIES PLUGS

PLUG SIZE	PIPE DIAMETER																		
	4"	6"	8"	12"	15"	18"	19.35"	21"	24"	30"	36"	42"	48"	54"	60"	66"	72"	84"	96"
15"-32"		-	-	-	18.6 psi	17.6 psi	17.2 psi	16.6 psi	15.4 psi	12.2 psi	-	-	-	-	-	-	-	-	-
20"-40"		-	-	-	-	-	-	13.6 psi	12.5 psi	11.2 psi	10.2 psi	8.7 psi	-	-	-	-	-	-	-
24"-48"		-	-	-	-	-	-	-	15.2 psi	13.9 psi	12.8 psi	11.4 psi	10.1 psi	-	-	-	-	-	-
24"-60"		-	-	-	-	-	-	-	15.6 psi	15.2 psi	14.8 psi	14.0 psi	12.6 psi	9.6 psi	6.0 psi	-	-	-	-
40"-60"		-	-	-	-	-	-	-	-	-	-	15.0 psi	13.0 psi	11.0 psi	8.7 psi	-	-	-	-
48"-72"		-	-	-	-	-	-	-	-	-	-	-	7.2 psi	6.8 psi	6.4 psi	6.2 psi	6.0 psi	-	-
54"-96"		-	-	-	-	-	-	-	-	-	-	-	-	7.3 psi	7.2 psi	6.9 psi	6.8 psi	6.6 psi	6.4 psi

Consult page 69 for back pressure conversion to feet of head pressure.

ALWAYS BLOCK PLUGS WHEN CONDUCTING AIR TESTS.

PILLOW-STYLE TEST-BALL® PLUGS

Cherne's Pillow-Style Test-Balls are great for blocking sewer flow and can also be used as a "back plug" for sewer air testing. Made from heavy-duty elastic urethane, these plugs are lightweight, flexible, chemical and petroleum resistant, and will fit through small diameter openings. Pillow-style plugs can be tethered to full head pressure with the tether bar.

Features:

- Equipped with a special 30' inflation hose, read-back line and gauge
- A repair kit is available to fix small tears and punctures

Blocking flow

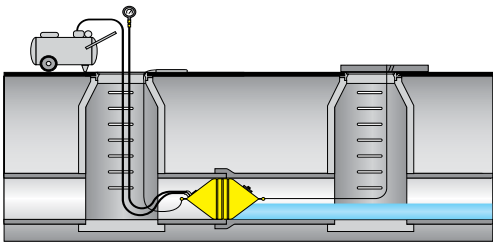

PILLOW-STYLE TEST-BALL

Pillow-Style Test-Ball® plugs are not suitable for leak location or vacuum testing. Custom sizes of the Pillow-Style Test-Ball® plug are also available.

PART NUMBER	NOMINAL SIZE	USAGE RANGE	MAXIMUM BACK PRESSURE		INFLATION PRESSURE	PRODUCT WEIGHT	DEFLATED LENGTH	DEFLATED DIAMETER	INFLATION THREAD
277108	*15" (375 mm)	14.7"–15.5" (373–394 mm)	15 psi (1 bar)	35 ft. (11 M)	24 psi (1,65 bar)	7 lbs (3.2 kg)	43" (1100 mm)	12" (305 mm)	1/4" (1)
277118	*18" (450 mm)	17.8"–18.8" (451–477 mm)	15 psi (1 bar)	35 ft. (11 M)	24 psi (1,65 bar)	9 lbs (4.1 kg)	43" (1100 mm)	12" (305 mm)	1/4" (1)
277128	*20" (500 mm)	19.6"–20.7" (498–526 mm)	13 psi (0,9 bar)	30 ft. (9.1 M)	18 psi (1,24 bar)	12 lbs (5.5 kg)	43" (1100 mm)	12" (305 mm)	1/4" (1)
277134	*21" (525 mm)	20.6"–21.8" (523–554 mm)	13 psi (0,9 bar)	30 ft. (9.1 M)	18 psi (1,24 bar)	14 lbs (6.4 kg)	43" (1100 mm)	12" (305 mm)	1/4" (1)
277142	*24" (600 mm)	23.5"–25.2" (598–641 mm)	11 psi (0,76 bar)	25 ft. (7.6 M)	18 psi (1,24 bar)	16 lbs (7.3 kg)	66" (1700 mm)	12" (305 mm)	1/4" (1)
277150	*27" (700 mm)	26.5"–28.2" (672–717 mm)	11 psi (0,76 bar)	25 ft. (7.6 M)	18 psi (1,24 bar)	18 lbs (8.2 kg)	66" (1700 mm)	12" (305 mm)	1/2" (1)
277169	30" (750 mm)	29.4"–31.25" (747–794 mm)	11 psi (0,76 bar)	25 ft. (7.6 M)	18 psi (1,24 bar)	20 lbs (9.1 kg)	66" (1700 mm)	12" (305 mm)	1/2" (1)
277177	33" (850 mm)	32.3"–34.25" (819–870 mm)	8.7 psi (0,61 bar)	20 ft. (6.1 M)	13 psi (0,9 bar)	22 lbs (9.9 kg)	95" (2413 mm)	12" (305 mm)	1/2" (1)
277185	36" (900 mm)	35.3"–37.5" (896–953 mm)	8.7 psi (0,61 bar)	20 ft. (6.1 M)	13 psi (0,9 bar)	32 lbs (14.5 kg)	95" (2413 mm)	12" (305 mm)	1/2" (1)
277193	42" (1100 mm)	41.2"–43.7" (1045–1111 mm)	7.8 psi (0,55 bar)	18 ft. (5.5 M)	12 psi (0,83 bar)	36 lbs (16.4 kg)	95" (2413 mm)	12" (305 mm)	1/2" (1)
277207	48" (1200 mm)	47.04"–50" (1195–1270 mm)	5.6 psi (0,4 bar)	13 ft. (4 M)	12 psi (0,83 bar)	41 lbs (18.6 kg)	95" (2413 mm)	12" (305 mm)	1/2" (1)
277215	54" (1400 mm)	52.92"–56" (1344–1422 mm)	5.6 psi (0,4 bar)	13 ft. (4 M)	10 psi (0,7 bar)	48 lbs (21.8 kg)	95" (2413 mm)	15" (381 mm)	1/2" (1)
277223	60" (1500 mm)	58.8"–62" (1494–1575 mm)	5.6 psi (0,4 bar)	13 ft. (4 M)	10 psi (0,7 bar)	64 lbs (29.1 kg)	126" (3200 mm)	15" (381 mm)	1/2" (1)
277231	66" (1700 mm)	64.7"–68" (1643–1727 mm)	3.5 psi (0,24 bar)	8 ft. (2.4 M)	8 psi (0,55 bar)	70 lbs (31.8 kg)	126" (3200 mm)	15" (381 mm)	1/2" (1)

ACCESSORIES

PART NUMBER	DESCRIPTION
008948	12" x 24" Pillow Plug Patch Kit

***15"– 27" pillow-style plugs have standard snifter valve air connection.**

REMO® REMOTE PLACEMENT PLUGS

The Remo® Remote Placement plug provides two advantages—it eliminates the need to enter confined spaces and speeds up the pipe plugging process. The system is safer and less expensive to use than conventional plugging methods because it requires no confined space equipment to simply block sewer flow. A lightweight aluminum pole system* or a standard 1¼" iron pipe** is used to place the Remo® plug in the sewer system.

Remo® Plug Features:

- Multi-size design to seal multiple pipe sizes
- Can be locked at a 90˚ angle to seal openings in manholes at different levels
- Can be used as a back plug for sewer tests
- Adapters available to convert Muni-Ball® plugs into Remo® plugs

Pole System Features:

- Consists of 6' lightweight aluminum poles with push-button construction
- Designed for plugs up to 30 lbs used in manhole depths of up to 20'
- Poles are 1/6th the weight of iron pipe
- Pole system requires Remo® pole adapter

REMO® REMOTE PLUGS

PART NUMBER	NOMINAL SIZE	USAGE RANGE	MAXIMUM BACK PRESSURE	INFLATION PRESSURE	PRODUCT WEIGHT	DEFLATED LENGTH
319128	6"-12" (150-300 mm)	5.5"-12.25" (140-310 mm)	15 PSI (1 Bar)	45 PSI (3 Bar)	8.5 lbs	25"
219128	8"-12" (200-300 mm)	7"-12.25" (178-311 mm)	15 PSI (1 Bar)	45 PSI (3 Bar)	11 lbs	18.5"
219188	12"-18" (300-450 mm)	10.75"-18.25" (273-464 mm)	15 PSI (1 Bar)	45 PSI (3 Bar)	25 lbs	25"

ACCESSORIES

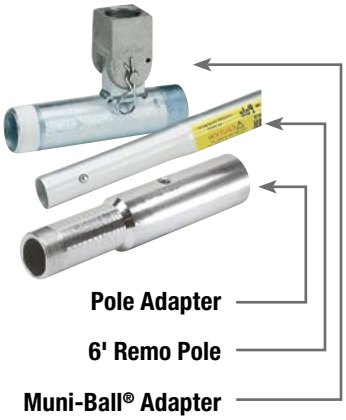

PART NUMBER	DESCRIPTION
019473	6' Remo® Pole
019458	Remo® Pole Adapter (1¼" M NPT)
019558	1½" Remo® Muni-Ball® Adapter
019568	2" Remo® Muni-Ball® Adapter
019548	2" – 1½" Remo® Reducer Bushing
060508	3" – 2" Remo® Reducer Bushing
059688	4" – 2" Remo® Reducer Bushing

***Requires pole adapter**

****When added strength is needed, iron pipe is recommended**

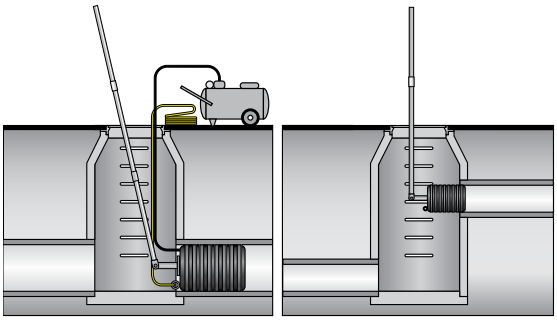

ALWAYS BLOCK PLUGS WHEN CONDUCTING AIR TESTS.

ORIGINAL MUNI-BALL® PLUGS

The Muni-Ball® Plug was introduced over 50 years ago and the Cherne brand continues to be the most trusted name in pneumatic plugs today. Muni-Ball® Plugs offer a full bypass allowing both testing and monitoring of piping systems. Muni-Balls® are ideal for installation and repair of residential or commercial piping systems. Cherne Muni-Ball® products can also be used for maintenance of municipal infrastructure, including sanitary and storm sewer pipe systems. Muni-Ball® plugs are durable, rugged and are effective on almost any type of pipe.

Features:

- Muni-Ball® Plugs are supplied with Schrader tire inflation valves
- Larger diameter Muni-Ball® Plugs include a removable threaded valve, allowing the user to replace with quick disconnect fittings
- Multi-Size® Muni-Ball® Plugs allow more options and less inventory
- 8", 10", 12" and 15" Sizes now include modified plug (078751) for sewer air tests

Bypass Pumping

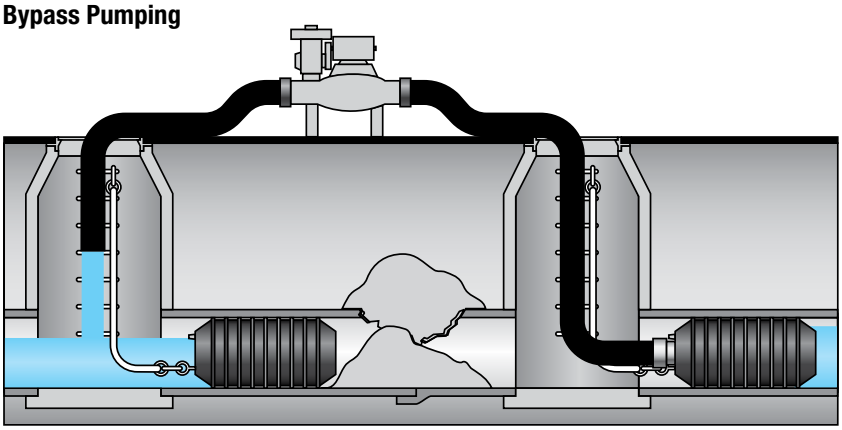

Sewer Air Test

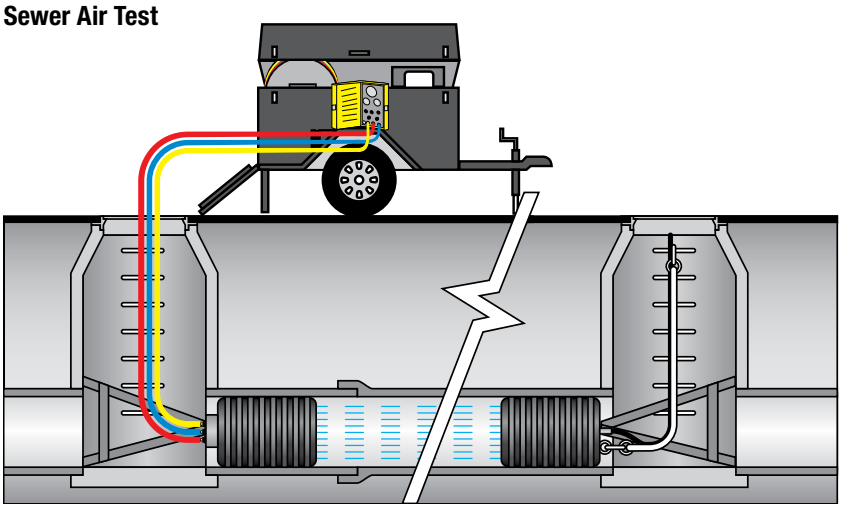

SINGLE SIZE

PART NUMBER	NOM. SIZE	BYPASS DIAMETER (NPT)	USAGE RANGE	MAXIMUM BACK PRESSURE		INFLATION PRESSURE	PRODUCT WEIGHT	DEFLATED LENGTH	DEFLATED DIAMETER	INFLATION THREAD	CHAIN / EYE BOLTS
262008	1.5" (40 mm)	1/4" M	1.49"–1.88" (38–48 mm)	22 psi (1,5 bar)	50 ft (15 M)	40 psi (2,8 bar)	0.3 lbs (0.2 kg)	3.8" (97 mm)	1.4" (36 mm)	Molded in Valve	Removable Chain
262010	2" (50 mm)	1/8" F	1.88"–2.25" (48–57 mm)	22 psi (1,5 bar)	50 ft (15 M)	40 psi (2,8 bar)	0.4 lbs (0.3 kg)	6" (152 mm)	1.75" (44 mm)	Molded in Valve	Removable Chain
262038	2.5" (64 mm)	1/8" F	2.25"–2.75" (57–70 mm)	15 psi (1 bar)	35 ft (11 M)	40 psi (2,8 bar)	0.6 lbs (0.27 kg)	5.7" (145 mm)	2.07" (53 mm)	Molded in Valve	Removable Chain
262258	3" (75 mm)	1/2" F	2.62"–3.25" (67–83 mm)	22 psi (1,5 bar)	50 ft (15 M)	40 psi (2,8 bar)	1.25 lbs (0.5 kg)	8" (203 mm)	2.5" (64 mm)	Molded in Valve	Removable Chain
262048	4" (100 mm)	3/4" F	3.25"–4.25" (83–108 mm)	22 psi (1,5 bar)	50 ft (15 M)	40 psi (2,8 bar)	1.5 lbs (0.7 kg)	8" (203 mm)	3.13" (80 mm)	Molded in Valve	1/4" (1)
262064	6" (150 mm)	1 1/2" F	4.50"–6.25" (144–159 mm)	13 psi (0,9 bar)	30 ft. (9.1 M)	35 psi (2,4 bar)	2 lbs (1 kg)	7" (178 mm)	4.5" (112 mm)	1/8"	1/4" (1)
262080	8" (200 mm)	3" F	7.00"–8.25" (178–210 mm)	13 psi (0,9 bar)	30 ft. (9.1 M)	35 psi (2,4 bar)	5 lbs (2.3 kg)	10" (254 mm)	6.75" (170 mm)	1/4"	3/8" (1)
262110	10" (250 mm)	3" F	9.00"–10.25" (229–260 mm)	13 psi (0,9 bar)	30 ft. (9.1 M)	35 psi (2,4 bar)	9 lbs (4 kg)	11.75" (298 mm)	8.75" (222 mm)	1/4"	3/8" (1)
262129	12" (300 mm)	3" F	10.50"–12.25" (267–311 mm)	13 psi (0,9 bar)	30 ft. (9.1 M)	35 psi (2,4 bar)	13 lbs (6 kg)	13.75" (350 mm)	10.25" (260 mm)	1/4"	3/8" (1)
262137	15" - 16" (375-400 mm)	3" F	14.0"–16.0" (356–413 mm)	13 psi (0,9 bar)	30 ft. (9.1 M)	35 psi (2,4 bar)	33 lbs (15 kg)	19.75" (502 mm)	13.75" (346 mm)	1/4"	3/8" (1)
262188	18" (450 mm)	4" F	17.5"–19.5" (445–504 mm)	13 psi (0,9 bar)	30 ft. (9.1 M)	25 psi (1,7 bar)	79 lbs (36 kg)	24.75" (629 mm)	16.9" (429 mm)	1/4"	1/2" (2)
262218	21" (525 mm)	4" F	18.55"–21.38" (479–543 mm)	13 psi (0,9 bar)	30 ft. (9.1 M)	25 psi (1,7 bar)	87 lbs (39 kg)	26" (660 mm)	18.25" (462 mm)	1/4"	1/2" (2)
262242	24" (600 mm)	4" F	22.0"–25" (558–632 mm)	13 psi (0,9 bar)	30 ft. (9.1 M)	25 psi (1,7 bar)	124 lbs (56 kg)	28.75" (730 mm)	21.25" (538 mm)	1/4"	1/2" (2)

MULTI-SIZE

PART NUMBER	NOMINAL SIZE	BYPASS DIAMETER (NPT)	USAGE RANGE	MAXIMUM BACK PRESSURE		INFLATION PRESSURE	PRODUCT WEIGHT	DEFLATED LENGTH	DEFLATED DIAMETER	INFLATION THREAD	CHAIN / EYE BOLTS
265048	4" – 6" (100–150 mm)	3/4" F	3.75"–6.25" (95–159 mm)	17 psi (1,2 bar)	40 ft (12 M)	35 psi (2,4 bar)	2.5 lbs (1.1 kg)	10.75" (273 mm)	3.46" (88 mm)	1/8"	1/4" (1)
265068	6" – 8" (150–200 mm)	1 1/2" F	5.50"–8.35" (133–212 mm)	17 psi (1,2 bar)	40 ft (12 M)	35 psi (2,4 bar)	6 lbs (2.7 kg)	13" (330 mm)	5" (125 mm)	1/4"	3/8" (1)
265078	8" – 10" (22–250 mm)	2" F	7.00"–10.25" (178–260 mm)	17 psi (1,2 bar)	40 ft (12 M)	30 psi (2,1 bar)	9 lbs (3 kg)	14.5" (368 mm)	6.75" (171 mm)	1/4"	3/8" (1)

BIG MOUTH®
FLOW-THROUGH PLUGS

Big Mouth® plugs serve multiple applications. Great for **gravity bypassing** or **bypass pumping**.

Original Size Big Mouth Plugs
- Large male NPT threaded bypass
- Equipped with removable 3/8" eyebolt for lifting /lowering plug
- Removable tire valve for easy replacement with optional quick disconnect
- Lightweight aluminum bypass

Single Size Big Mouth Plug
- Allows for largest bypass by pipe diameter
- 6", 8", 10" sizes have threaded bypasses
- 12", 15", 18", 21" and 24" have straight tube bypasses
  - Attach hose with banding

Multi-Size Big Mouth Plug
- Multi-size Big Mouth Plug offers greater expansion range
- Lightweight aluminum bypass
- Removable tire valve for easy replacement with optional quick disconnect

Multi-Size Big Mouth Plug with Interchangeable Bypass Flange
- Interchangeable Bypass for different bypass needs Multi-size Big Mouth Plug offers greater expansion range
- Lightweight aluminum bypass
- Removable tire valve for easy replacement with optional quick disconnect

Bypass Pumping

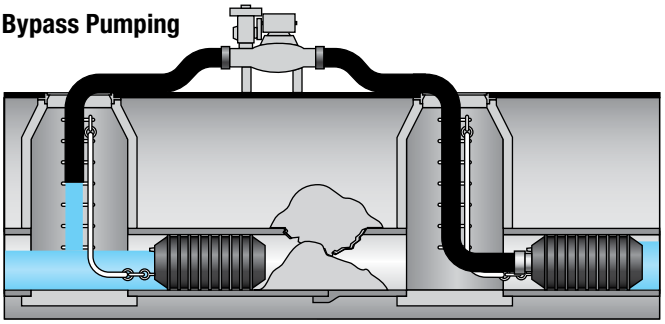

Gravity Bypassing

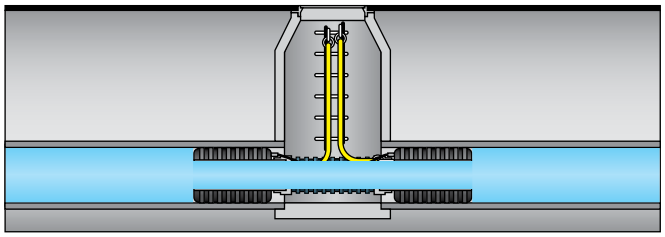

ORIGINAL SIZE BIG MOUTH PLUGS

PART NUMBER	NOMINAL SIZE	BYPASS DIAMETER (NPT)	USAGE RANGE	MAXIMUM BACK PRESSURE		INFLATION PRESSURE	PRODUCT WEIGHT	DEFLATED LENGTH	DEFLATED DIAMETER	INFLATION THREAD	CHAIN / EYE BOLTS
269008	8" – 10" (200–250 mm)	4" M	7.25"–10.25" (185–250 mm)	11 psi (0,76 bar)	25 ft. (7.6 M)	35 psi (2,4 bar)	8.8 lbs (4 kg)	14.88" (378 mm)	6.94" (176 mm)	1/4" (1)	3/8" (1)
269018	10" – 12" (250–300 mm)	6" M	9.25"–12.25" (235–311 mm)	11 psi (0,76 bar)	25 ft. (7.6 M)	30 psi (2,1 bar)	15.7 lbs (7.12 kg)	17.25" (438 mm)	8.81" (224 mm)	1/4" (1)	3/8" (1)
269028	12" – 15" (300–380 mm)	6" M	10.62"–15.25" (270–387 mm)	11 psi (0,76 bar)	25 ft. (7.6 M)	30 psi (2,1 bar)	20 lbs (9 kg)	17.88" (454 mm)	10.25" (260 mm)	1/4" (1)	3/8" (1)

SINGLE SIZE BIG MOUTH PLUGS

PART NUMBER	NOMINAL SIZE	BYPASS DIAMETER (NPT)	USAGE RANGE	MAXIMUM BACK PRESSURE		INFLATION PRESSURE	PRODUCT WEIGHT	DEFLATED LENGTH	DEFLATED DIAMETER	INFLATION THREAD	CHAIN / EYE BOLTS
369068	6" (150 mm)	4" M	5.69"–6.34" (145 –161 mm)	11 psi (0,76 bar)	25 ft. (7.6 M)	30 psi (2,1 bar)	7 lbs (3.2 kg)	13.25" (337 mm)	5.38" (137 mm)	1/4" (1)	3/8" (1)
369088	8" (200 mm)	6" M	7.75"–8.45" (195–215 mm)	11 psi (0,76 bar)	25 ft. (7.6 M)	30 psi (2,1 bar)	10 lbs (4.5 kg)	16" (406 mm)	7.5" (191 mm)	1/4" (1)	3/8" (1)
369108	10" (250 mm)	8" OD	9.75"–10.46" (250–266 mm)	11 psi (0,76 bar)	25 ft. (7.6 M)	30 psi (2,1 bar)	17 lbs (7.7 kg)	20" (508 mm)	9.13" (232 mm)	1/4" (1)	3/8" (1)
369128	12" (300 mm)	10" OD	11.75"–12.52" (300–318 mm)	11 psi (0,76 bar)	25 ft. (7.6 M)	30 psi (2,1 bar)	21 lbs (9.5 kg)	20" (508 mm)	11.13" (283 mm)	1/4" (1)	3/8" (1)
369158	15" (380 mm)	12" OD	13.9"–15.56" (353–395 mm)	11 psi (0,76 bar)	25 ft. (7.6 M)	30 psi (2,1 bar)	26 lbs (11.8 kg)	20" (508 mm)	13.13" (333 mm)	1/4" (1)	3/8" (1)
369188	18" (450 mm)	15" OD	16.88"–18.74" (429–476 mm)	11 psi (0,76 bar)	25 ft. (7.6 M)	30 psi (2,1 bar)	31 lbs (14 kg)	20" (508 mm)	16.13" (410 mm)	1/4" (1)	3/8" (1)
369218	21" (525 mm)	18" OD	20.01"–21.81" (508–554 mm)	11 psi (0,76 bar)	25 ft. (7.6 M)	30 psi (2,1 bar)	37 lbs (16.8 kg)	20" (508 mm)	19.13" (486 mm)	1/4" (1)	3/8" (1)
369248	24" (600 mm)	20" OD	22.63"–24.98" (575–634 mm)	11 psi (0,76 bar)	25 ft. (7.6 M)	30 psi (2,1 bar)	42 lbs (19 kg)	20" (508 mm)	21.13" (537 mm)	1/4" (1)	3/8" (1)

BIG MOUTH®
FLOW-THROUGH PLUGS

MULTI-SIZE BIG MOUTH PLUGS

PART NUMBER	NOMINAL SIZE	BYPASS DIAMETER (NPT)	USAGE RANGE	MAXIMUM BACK PRESSURE		INFLATION PRESSURE	PRODUCT WEIGHT	DEFLATED LENGTH	DEFLATED DIAMETER	INFLATION THREAD	CHAIN / EYE BOLTS
374068	6" – 10" (150–250 mm)	4" M	5.75"–10.25" (146–260 mm)	10 psi (0,69 bar)	23 ft. (10 M)	40 psi (2,8 bar)	15 lbs (6.8 kg)	24.5" (622 mm)	5.65" (146 mm)	1/4" (1)	3/8" (1)
374088	8" – 12" (200–300 mm)	4" M	7"–12.25" (178–311 mm)	15 psi (1 bar)	34 ft. (10.5 M)	35 psi (2,4 bar)	22 lbs (10 kg)	26" (660 mm)	6.75" (165 mm)	1/4" (1)	3/8" (1)
376088	8" – 12" (200–300 mm)	6" M	7"–12.25" (178–311 mm)	15 psi (1 bar)	34 ft. (10.5 M)	35 psi (2,4 bar)	22 lbs (10 kg)	26" (660 mm)	6.76" (165 mm)	1/4" (1)	3/8" (1)
376128	12" – 18" (300–450 mm)	6" M	11.25"–18.25" (286–464 mm)	10 psi (0,69 bar)	23 ft. (10 M)	25 psi (1,7 bar)	45 lbs (21 kg)	28" (711 mm)	11" (279 mm)	1/4" (1)	3/8" (1)
378128	12" – 18" (300–450 mm)	8" M	11.25"–18.25" (286–464 mm)	10 psi (0,69 bar)	23 ft. (10 M)	25 psi (1,7 bar)	45 lbs (21 kg)	28" (711 mm)	11" (279 mm)	1/4" (1)	3/8" (1)

MULTI-SIZE PLUGS WITH INTERCHANGEABLE FLANGE

PART NUMBER	NOMINAL SIZE	BYPASS DIAMETER (NPT)	USAGE RANGE	MAXIMUM BACK PRESSURE		INFLATION PRESSURE	PRODUCT WEIGHT	DEFLATED LENGTH	DEFLATED DIAMETER	INFLATION THREAD	CHAIN / EYE BOLTS
376148	14" – 21" (375–525 mm)	6" M	13.6"–21.25" (345–540 mm)	10 psi (0,69 bar)	23 ft. (10 M)	25 psi (1,7 bar)	60 lbs (27 kg)	30" (762 mm)	13.25" (337 mm)	1/8" (1)	3/8" (2)
378148	14" – 21" (375–525 mm)	8" M	13.6"–21.26" (345–540 mm)	10 psi (0,69 bar)	23 ft. (10 M)	25 psi (1,7 bar)	60 lbs (27 kg)	30" (762 mm)	13.25" (337 mm)	1/8" (1)	3/8" (2)
380148	14" – 21" (375–525 mm)	10" M	13.6"–21.27" (345–540 mm)	10 psi (0,69 bar)	23 ft. (10 M)	25 psi (1,7 bar)	60 lbs (27 kg)	30" (762 mm)	13.25" (337 mm)	1/8" (1)	3/8" (2)
376188	18" – 24" (450–600 mm)	6" M	16.5"–24.25" (419–616 mm)	10 psi (0,69 bar)	23 ft. (10 M)	22 psi (1,5 bar)	90 lbs (41 kg)	34" (864 mm)	16" (406 mm)	1/8" (1)	1/2" (2)
378188	18" – 24" (450–600 mm)	8" M	16.5"–24.26" (419–616 mm)	10 psi (0,69 bar)	23 ft. (10 M)	22 psi (1,5 bar)	90 lbs (41 kg)	34" (864 mm)	16" (406 mm)	1/8" (1)	1/2" (2)
380188	18" – 24" (450–600 mm)	10" M	16.5"–24.27" (419–616 mm)	10 psi (0,69 bar)	23 ft. (10 M)	22 psi (1,5 bar)	90 lbs (41 kg)	34" (864 mm)	16" (406 mm)	1/8" (1)	1/2" (2)

BIG MOUTH FLANGE KITS

PART NUMBER	NOMINAL SIZE	BYPASS DIAMETER
049068	14" – 21"	6" M
049088	14" – 21"	8" M
049188	18" – 24"	8" M
049208	18" – 24"	10" M

I-SERIES MUNI BALL® PLUGS

The future in pipe plugs is now.

Features:

- Industry leading quality, consistency, and durability
- Mechanical bonding of premium natural rubber and end plates eliminates failures from chemical bonding
- Improved performance and safety through optimized design
- Superior back pressure
- Premium performance and aesthetics
- Lightweight, short, and flexible

Cherne's I-Series Muni-Ball plugs were designed to meet the needs of both the US and International markets in terms of size and expansion range. Our I-Series plugs have full body cording for added durability.

I-Series plugs feature:

- Superior expansion range
- Small deflated diameters
  - All plugs up through our 24–60" size easily fit through a 24" manhole frame
  - 48–72" and 54–96" plugs fit through 36" openings
- Flexible bypass hoses – plugs can be bent to 90 degrees

Plugs 15-32" and larger:

- Aluminum end plates – minimizes rust/corrosion
- 3/4" eyebolts on plugs 15–32" and larger – better holding strength
- Patented field replaceable rupture discs or pressure relief valves on plugs 15–32" and larger – protects plug from over-inflation

Protective sleeves available for 12"–18" diameter and larger plugs. See page 23.

I-SERIES MUNI BALL® PLUGS

Protective sleeves available for 12"-18" diameter and larger plugs.

PART NUMBER	NOMINAL SIZE	BYPASS DIAMETER (NPT)	USAGE RANGE	MAXIMUM BACK PRESSURE	INFLATION PRESSURE	PRODUCT WEIGHT	DEFLATED LENGTH
311088	4"-8" (100-200 mm)	1/2" M	3.95"-8.25" (92-210 mm)	15 PSI (1 Bar)	45 PSI (3 Bar)	4.7 lbs	23"
311128	6"-12" (150-300 mm)	1" M	5.5"-12.25" (140-310 mm)	15 PSI (1 Bar)	45 PSI (3 Bar)	9.5 lbs	25"
212128	8"-12" (200-300 mm)	2" M	7"-12.25" (178-311 mm)	15 PSI (1 Bar)	45 PSI (3 Bar)	12.3 lbs	18.5"
312168	8"-16" (200-400 mm)	2" M	7.5"-16.25" (186-413 mm)	15 PSI (1 Bar)	45 PSI (3 Bar)	15.9 lbs	28"
214188	12"-18" (300-450 mm)	3" M	10.75"-18.25" (273-464 mm)	15 PSI (1 Bar)	45 PSI (3 Bar)	28.1 lbs	25"
613188	12"-18" (300-450 mm) with sleeve	3" M	10.75"-18.25" (273-464 mm)	15 PSI (1 Bar)	45 PSI (3 Bar)	43 lbs	25"
312248	12"-24" (300-600 mm)	3" M	11"-24.25" (279-616 mm)	15 PSI (1 Bar)	45 PSI (3 Bar)	35.2 lbs	37"
654248	12"-24" (300-600 mm) with sleeve	3" M	11"-24.25" (279-616 mm)	15 PSI (1 Bar)	45 PSI (3 Bar)	50.2 lbs	37"

BACK PRESSURE DATA: I-SERIES PLUGS

PLUG SIZE	PIPE DIAMETER								
	4"	6"	8"	10"	12"	16"	18"	21"	24"
4"-8"	30.0 psi	23.0 psi	15.0 psi	-	-	-	-	-	-
6"-12"	-	26.0 psi	23.0 psi	22.0 psi	15.0 psi	-	-	-	-
8"-12"	-	-	26.0 psi	23.0 psi	15.0 psi	-	-	-	-
8"-16"	-	-	29.0 psi	27.0 psi	25.0 psi	15.0 psi	-	-	-
12"-18"	-	-	-	-	25.0 psi	22.0 psi	15.0 psi	-	-
12"-24"	-	-	-	-	27.0 psi	25.0 psi	22.0 psi	19.0 psi	15.0 psi

Consult page 69 for back pressure conversion to feet of head pressure.

I-SERIES MUNI BALL®
PLUGS CONTINUED

I-SERIES MUNI BALL® PLUGS

PART NUMBER	NOMINAL SIZE	BYPASS DIAMETER (NPT)	USAGE RANGE	MAXIMUM BACK PRESSURE	INFLATION PRESSURE	PRODUCT WEIGHT	DEFLATED LENGTH	DEFLATED DIAMETER	INFLATION THREAD	CHAIN / EYE BOLTS
312328	15"–32" (375–800 mm)	2" M	15"–32" (375–800 mm)	**	25 psi (1,72 bar)	73 lbs (33.2 kg)	48" (1220 mm)	14.3" (363 mm)	1/4" & 1/2"	3/4" (2)
314328	15"–32" (375–800 mm)	4" M	15"–32" (375–800 mm)	**	25 psi (1,72 bar)	80 lbs (36.4 kg)	48" (1220 mm)	14.3" (363 mm)	1/4" & 1/2"	3/4" (2)
316328	15"–32" (375–800 mm)	6" M	15"–32" (375–800 mm)	**	25 psi (1,72 bar)	94 lbs (42.75 kg)	48" (1220 mm)	14.3" (363 mm)	1/4" & 1/2"	3/4" (2)
312408	20" – 40" (500–1000 mm)	2" M	19"–40" (475–1000 mm)	**	22 psi (1,5 bar)	88 lbs (40 kg)	46.25" (1175 mm)	18.5" (470 mm)	1/4" & 1/2"	1/2" (2)
314408	20" – 40" (500–1000 mm)	4" M	19"–40" (475–1000 mm)	**	22 psi (1,5 bar)	95 lbs (43 kg)	46.25" (1175 mm)	18.5" (470 mm)	1/4" & 1/2"	1/2" (2)
316408	20" – 40" (500–1000 mm)	6" M	19"–40" (475–1000 mm)	**	22 psi (1,5 bar)	106 lbs (48 kg)	46.25" (1175 mm)	18.5" (470 mm)	1/4" & 1/2"	1/2" (2)
314488	24" – 48" (600–1200 mm)	4" M	20"–50" (510–1270 mm)	**	22 psi (1,5 bar)	150 lbs (68 kg)	68" (1730 mm)	20" (485 mm)	1/4" & 1/2"	3/4" (2)
316488	24" – 48" (600–1200 mm)	6" M	20"–50" (510–1270 mm)	**	22 psi (1,5 bar)	153 lbs (69.5 kg)	68" (1730 mm)	20" (485 mm)	1/2"	3/4" (2)
314600	24" – 60" (1400–1500 mm)	4" M	20.5" – 60.5" (520 – 1537 mm)	**	22 psi (1,5 bar)	153 lbs (69.5 kg)	88" (2235 mm)	20" (485 mm)	1/4" & 1/2"	3/4" (2)
316600	24" – 60" (600–1500 mm)	6" M	20.5" – 60.5" (520 – 1537 mm)	**	22 psi (1,5 bar)	164 lbs (74.5 kg)	88" (2235 mm)	20" (485 mm)	1/4" & 1/2"	3/4" (2)
314728	48" – 72" (1200–1800 mm)	4" M	44"–72.25" (1118–1835 mm)	**	12 psi (0,83 bar)	310 lbs (141 kg)	93" (2632 mm)	43" (1092 mm)	1/2" (2)	3/4" (3)
316728	48" – 72" (1200–1800 mm)	6" M	44" – 72.25" (1200 – 1835 mm)	**	12 psi (0,83 bar)	418 lbs (190.0 kg)	93" (2632 mm)	43" (1092 mm)	1/2" (2)	3/4" (3)
318728	48" – 72" (1200–1800 mm)	8" Flanged	44" – 72.25" (1200 – 1835 mm)	**	12 psi (0,83 bar)	448 lbs (203.6 kg)	93" (2632 mm)	43" (1092 mm)	1/2" (2)	3/4" (3)
314968	54" – 96" (1400–2400 mm)	4" M	54"–96.25" (1400–2450 mm)	**	11 psi (0,75 bar)	500 lbs (228 kg)	128" (3200 mm)	43" (1092 mm)	1/2" (2)	3/4" (3)
316968	54" – 96" (1400–2400 mm)	6" M	50" – 96.25" (1270 – 2400 mm)	**	11 psi (0,75 bar)	480 lbs (218.2 kg)	132" (3353 mm)	43" (1092 mm)	1/2" (2)	3/4" (3)
319968	54" – 96" (1400–2400 mm)	8" Flanged	50" – 96.25" (1270 – 2400 mm)	**	11 psi (0,75 bar)	506 lbs (230.0 kg)	132" (3353 mm)	43" (1092 mm)	1/2" (2)	3/4" (3)

**** Consult back pressure table below.**

BACK PRESSURE DATA: I-SERIES PLUGS

PLUG SIZE	PIPE DIAMETER																		
	4"	6"	8"	12"	15"	18"	19.35"	21"	24"	30"	36"	42"	48"	54"	60"	66"	72"	84"	96"
15"-32"		-	-	-	18.6 psi	17.6 psi	17.2 psi	16.6 psi	15.4 psi	12.2 psi	-	-	-	-	-	-	-	-	-
20"-40"		-	-	-	-	-	-	13.6 psi	12.5 psi	11.2 psi	10.2 psi	8.7 psi	-	-	-	-	-	-	-
24"-48"		-	-	-	-	-	-	-	15.2 psi	13.9 psi	12.8 psi	11.4 psi	10.1 psi	-	-	-	-	-	-
24"-60"		-	-	-	-	-	-	-	15.6 psi	15.2 psi	14.8 psi	14.0 psi	12.6 psi	9.6 psi	6.0 psi	-	-	-	-
40"-60"		-	-	-	-	-	-	-	-	-	-	15.0 psi	13.0 psi	11.0 psi	8.7 psi	-	-	-	-
48"-72"		-	-	-	-	-	-	-	-	-	-	-	7.2 psi	6.8 psi	6.4 psi	6.2 psi	6.0 psi	-	-
54"-96"		-	-	-	-	-	-	-	-	-	-	-	-	7.3 psi	7.2 psi	6.9 psi	6.8 psi	6.6 psi	6.4 psi

Consult page 69 for back pressure conversion to feet of head pressure.

AIR-LOC® & I-SERIES
LEAK LOCATOR PLUGS

Air-Loc leak locator plugs are designed for both line acceptance tests as well as leak location testing. Air-Loc front plugs can also be used as blocking plugs by simply plugging the fill and read-back ports.

Features:

- Eyebolts on both ends for interconnecting plugs
- Easy to use quick-disconnect hose connections

"Front" Air-Loc Leak Locator Plugs also come equipped with:

- Color coded inflation ports
- Removable air fittings
- Flexible internal hoses

Line Acceptance Test

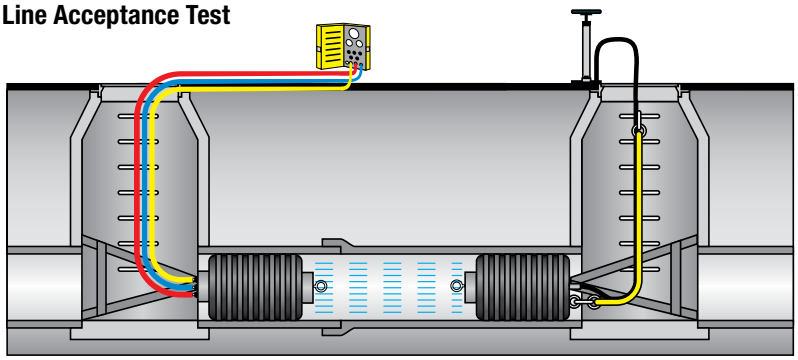

Front Plug

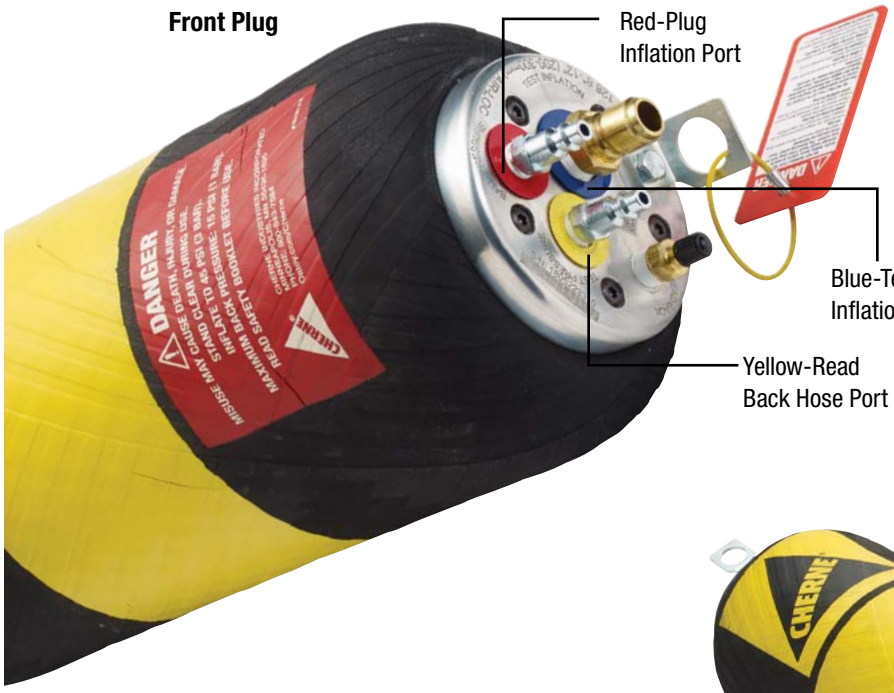

I-Series Front Plug

AIR-LOC® & I-SERIES
LEAK LOCATOR PLUGS CONTINUED

FRONT PLUGS

PART NUMBER	NOMINAL SIZE	USAGE RANGE	MAXIMUM BACK PRESSURE	INFLATION PRESSURE	PRODUCT WEIGHT	DEFLATED LENGTH
AIR-LOC® PLUG						
317128	6"-12" (150-300 mm)	5.5"-12.25" (150-311 mm)	15 PSI (1 Bar)	45 PSI (3 Bar)	8 lbs	25"
217128	8"-12" (200-300 mm)	7"-12.25" (178-312 mm)	15 PSI (1 Bar)	45 PSI (3 Bar)	10.4 lbs	18.5"
217168	8"-16" (200-400 mm)	7.5"-16.25" (186-413 mm)	15 PSI (1 Bar)	45 PSI (3 Bar)	15 lbs	28"
217188	12"-18" (300-450 mm)	10.75"-18.25" (273-478 mm)	15 PSI (1 Bar)	45 PSI (3 Bar)	23 lbs	25"
617188	12"-18" (300-450 mm) with sleeve	10.75"-18.25" (273-478 mm)	15 PSI (1 Bar)	45 PSI (3 Bar)	38 lbs	25"
217288	12"-24" (300-600 mm)	11"-24.25" (279-616 mm)	15 PSI (1 Bar)	45 PSI (3 Bar)	31 lbs	37"
617248	12"-24" (300-600 mm) with sleeve	11"-24.25" (279-616 mm)	15 PSI (1 Bar)	45 PSI (3 Bar)	43 lbs	37"
I-SERIES FRONT PLUGS						
*317328	15"-32" (380-800 mm)	15"-32" (380-800 mm)	**	25 PSI (1,72 Bar)	73 lbs	48"
*317408	20"-40" (500-1000 mm)	19"-40" (475-1000 mm)	**	22 PSI (1,5 bar)	95 lbs	46.25"
*317488	24"-48" (600-1200 mm)	20.5"-50" (521-1270 mm)	**	22 psi (1,5 bar)	125 lbs	74.5"
*317600	24"-60" (600-1500 mm)	20.5"-60.5" (520-1537 mm)	**	22 psi (1,5 bar)	148 lbs	88"
*317728	48"-72" (1200-1800 mm)	44"-72.25" (1118-1835 mm)	**	12 psi (0,83 bar)	290 lbs	100"
*317968	54"-96" (1400-2400 mm)	54"-96.25" (1400-2450 mm)	**	11 psi (0,75 bar)	500 lbs	128"

***Pressure relief valve or rupture disc ** Consult back pressure table below.**

BACK PRESSURE DATA: I-SERIES PLUGS

PLUG SIZE	PIPE DIAMETER								
	4"	6"	8"	10"	12"	16"	18"	21"	24"
4"-8"	30.0 psi	23.0 psi	15.0 psi	-	-	-	-	-	-
6"-12"	-	26.0 psi	23.0 psi	22.0 psi	15.0 psi	-	-	-	-
8"-12"	-	-	26.0 psi	23.0 psi	15.0 psi	-	-	-	-
8"-16"	-	-	29.0 psi	27.0 psi	25.0 psi	15.0 psi	-	-	-
12"-18"	-	-	-	-	25.0 psi	22.0 psi	15.0 psi	-	-
12"-24"	-	-	-	-	27.0 psi	25.0 psi	22.0 psi	19.0 psi	15.0 psi

PLUG SIZE	PIPE DIAMETER														
	15"	18"	19.35"	21"	24"	30"	36"	42"	48"	54"	60"	66"	72"	84"	96"
15"-32"	18.6 psi	17.6 psi	17.2 psi	16.6 psi	15.4 psi	12.2 psi	-	-	-	-	-	-	-	-	-
20"-40"	-	-	-	13.6 psi	12.5 psi	11.2 psi	10.2 psi	8.7 psi	-	-	-	-	-	-	-
24"-48"	-	-	-	-	15.2 psi	13.9 psi	12.8 psi	11.4 psi	10.1 psi	-	-	-	-	-	-
24"-60"	-	-	-	-	15.6 psi	15.2 psi	14.8 psi	14.0 psi	12.6 psi	9.6 psi	6.0 psi	-	-	-	-
40"-60"	-	-	-	-	-	-	-	15.0 psi	13.0 psi	11.0 psi	8.7 psi	-	-	-	-
48"-72"	-	-	-	-	-	-	-	-	7.2 psi	6.8 psi	6.4 psi	6.2 psi	6.0 psi	-	-
54"-96"	-	-	-	-	-	-	-	-	-	7.3 psi	7.2 psi	6.9 psi	6.8 psi	6.6 psi	6.4 psi

Consult page 69 for back pressure conversion to feet of head pressure.

Air-Loc Pressure Testing Panel
Ideal for line acceptance testing and leak location testing.
See page 47

Triple Hose
Connect Air-Loc plug to the control panel.
See page 48

ALWAYS BLOCK PLUGS WHEN CONDUCTING AIR TESTS.

PROTECTIVE SLEEVES

Greatly reduces possibility of damage to plug due to debris and sharp objects in the pipe. The protective sleeve also protects plugs when the pipe is degraded. Works particularly well in coastal areas where oysters and barnacles are present.

Features:

- 1/4" thick sleeve extends plug life
- Eliminates superficial cuts on plugs
- Great for rental distributors & frequent users
- Maintains back pressure ratings
- Easy to install without special tools

Plug with sleeve installed

PROTECTIVE SLEEVES

Protective Sleeve
Threading rope through eyelets holds sleeve in place during plug installation and removal.

PART NUMBER	SLEEVE SIZE
300968	12"-18" (300-450 mm)
300988	12"-24" (300-600 mm) old design for plugs made before May 2018
300978	12"-24" (300-600 mm)
300998	15"-30" (380-750 mm) & 15"-32" (380-800 mm)
301408	20"-40" (500-1000 mm)
301028	24"-48" (600-1200 mm)
301059	24"-60" (600-1500 mm)
301048	48"-72" (1200-1800 mm)
301068	54"-96" (1400-2400 mm)

Consult customer service for factory installed protective sleeves.

RUPTURE DISC & DUAL STAGE PRESSURE RELIEF VALVE (PRV)

Rupture Disc Features:

Increases Plug Life

- Disc activates at 60% over required inflation pressure
  - Helps prevent “non-visible” damage
  - Rupture disc won't burst until well over stated inflation pressure
  - No more catastrophic plug failures due to faulty gauges
  - Discs can be replaced in field

Improves User Safety

- Reduces the possibility of plug explosion due to over-inflation

Superior components/design

- Aluminum housing - will not rust
- Graphite rupture disc
  - Leak-free design
  - Precision calibrated

240008
Rupture Disc for Test Balls and Air-Loc Plugs with inflation pressures of 22-25 psi.

240068
Rupture Disc for Muni-Balls with inflation pressure of 22-25 psi.

220028
Rupture disc for Test Balls, Muni Balls, and Air-Loc Plugs with inflation pressure of 11-12 psi.

250028
Rupture Disc for High Pressure Plugs with inflation pressure of 200 psi.

Dual Stage Pressure Relief Valve Features:

- Industry first Dual-Stage Pressure Relief Valve (PRV) engineered specifically for pipe plugs
- Precision open and close
- Wide open when pressure is released
- Resets quickly and securely at or just above inflation pressure
- Internal filter assemblies prevent debris from causing damage or preventing reset
- Made of aluminum and stainless steel
- Field replaceable
- Left-hand threads for tamper resistance & to prevent misuse
- Prevents against over inflation & under inflation
- Overcomes high CFM air compressors

DUAL STAGE PRESSURE RELIEF VALVE (PRV)

PART NUMBER	DESCRIPTION
240078	PRV for plugs with inflation pressure up to 12 PSI
240088	PRV for plugs with inflation pressure up to 25 PSI
240098	PRV for plugs with inflation pressure up to 45 PSI
240108	Replacement kit to change from Rupture Disc to PRV on I-Series Test-Ball®

* If PRV is desired on 15"-32" and larger diamter Air-Loc® plugs made before 4/1/2019, the plug will need to be converted from Rupture Disc to PRV at the plant. Contact customer service for more information.

HIGH-PRESSURE PLUGS

High-Pressure Plug Features:

- Multi-size design for use in various pipe diameters
- The rubber and metal is bonded, elimination fears of separation or rolling off resulting from high back pressures
- Optimized design using steel, aramid and natural rubber to ensure longevity and robust construction
- Water must be used to pressurize these plugs due to high working pressure
- Removable and field repairable hardware
- Safety/over-inflation device
- Air is purged from the plug during inflation
- Air is purged from the test area (8"–12" and larger)

HIGH-PRESSURE PLUGS

PART NUMBER	PLUG DESCRIPTION	BYPASS DIAMETER	USAGE RANGE	MAXIMUM BACK PRESSURE	INFLATION PRESSURE	PRODUCT WEIGHT (LBS.)	DEFLATED LENGTH	DEFLATED DIAMETER	EYE BOLTS
511088	4"-8" (100-200 mm)	3/8" M	3.8"-8.2" (96.5-208.3 mm)	150 psi	200 psi	8 lbs	16"	3.8"	None
511128	8"-12" (200-300 mm)	1-1/2" M	7.7"-12.2" (195.6-309.9 mm)	150 psi	200 psi	24 lbs	24"	7.7"	1
512168	12"-16" (300-400 mm)	2" M	11.9"-16.2" (302.3-411.5 mm)	150 psi	200 psi	52 lbs	24"	11.9"	1
512208	16"-20" (400-500 mm)	2" M	15.2"-20.2" (386.1-513.1 mm)	150 psi	200 psi	92 lbs	24"	15.2"	2

ACCESSORIES

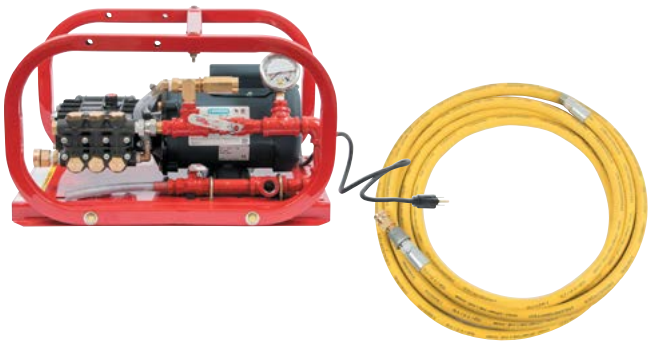

PART NUMBER	DESCRIPTION
276008	Inflation Hose, High Pressure Plug, 30', 1/4" QD
276018	Inflation Hose, High Pressure Plug, 30', 1/2" QD
276028	Read Back Hose, High Pressure Plug, 30', 1/4" QD
278198	Hydrostatic Test Pump, Electric
278188	Hydrostatic Test Pump, Manual

MECHANICAL PLUGS

MECHANICAL PLUGS

27 ORIGINAL GRIPPER®
28 HUB-FIT GRIPPER® • CLEAN-OUT GRIPPER®
29 T-HANDLE GRIPPER®
30 IRON GRIP
31 ECON-O-GRIP® • PETRO ECON-O-GRIP®
32 SURE-GRIP® • KWIK 'N SURE®
33 MONITOR-WELL PLUGS
34 TEST-KAP™

ORIGINAL GRIPPER®

Cherne's Gripper plugs can be used in a variety of applications including DWV (drain, waste and vent) testing and stack testing. End-of-Pipe design won't fall in, whereas the Inside-of-Pipe design allows you to locate the plug inside the pipe as far as you need. Time tested, the Gripper® remains one of the most popular mechanical plugs on the market.

Original Gripper® Plug Features:

- Ideal for sewer testing and long-term applications
- Made with glass-reinforced ABS plastic
- End-of-pipe design seals only at the end of a pipe
- Inside-of-pipe design seals inside pipe as far as needed

Equipped with:

- Easy-to-install extra large zinc wing nut – won't rust
- Natural rubber O-ring
- Galvanized carriage bolt to prevent corrosion

END-OF-PIPE GRIPPER

PART NUMBER	NOMINAL SIZE	USAGE RANGE	MAXIMUM BACK PRESSURE		LENGTH	PRODUCT WEIGHT
270210	1 1/2" (40 mm)	1.48"–1.65" (39–42 mm)	17 psi (1,2 bar)	40 ft. (12 M)	1.75" (44.5 mm)	0.13 lbs (0.05 kg)
270229	2" (50 mm)	1.9"–2.17" (49–55 mm)	17 psi (1,2 bar)	40 ft. (12 M)	1.87" (47.5 mm)	0.19 lbs (0.09 kg)
270237	3" (75 mm)	2.8"–3.1" (71–79 mm)	17 psi (1,2 bar)	40 ft. (12 M)	2.5" (63.5 mm)	0.375 lbs (0.16 kg)
270245	4" (100 mm)	3.8"–4.06" (96–103 mm)	17 psi (1,2 bar)	40 ft. (12 M)	2.5" (63.5 mm)	0.5 lbs (0.23 kg)
270261	6" (150 mm)	5.77"–6.08" (147–154 mm)	17 psi (1,2 bar)	40 ft. (12 M)	3.75" (95.3 mm)	2.5 lbs (1.14 kg)
270270	8" (200 mm)	7.7"–8.03" (196–204 mm)	17 psi (1,2 bar)	40 ft. (12 M)	3.75" (95.3 mm)	3 lbs (1.37 kg)

INSIDE-OF-PIPE GRIPPER

PART NUMBER	NOMINAL SIZE	USAGE RANGE	MAXIMUM BACK PRESSURE		LENGTH	PRODUCT WEIGHT
270296	4" (100 mm)	3.8"–4.06" (96–103 mm)	17 psi (1,2 bar)	40 ft. (12 M)	2.5" (63.5 mm)	.5 lbs (0.23 kg)
270253	6" (150 mm)	5.77"–6.08" (147–154 mm)	17 psi (1,2 bar)	40 ft. (12 M)	3.75" (95.3 mm)	2.5 lbs (1.14 kg)
270288	8" (200 mm)	7.7"–8.03" (196–204 mm)	17 psi (1,2 bar)	40 ft. (12 M)	3.75" (95.3 mm)	3 lbs (1.37 kg)

End-of-Pipe Gripper® plug

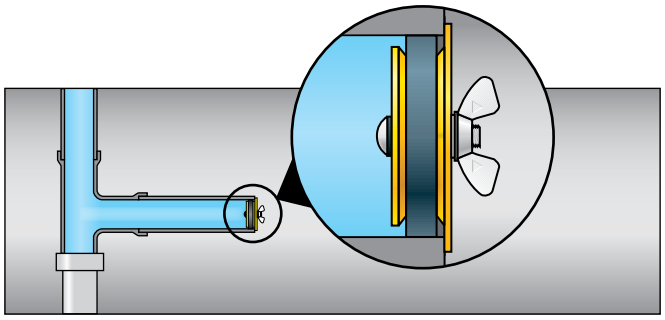

Inside-of-Pipe Gripper® plug

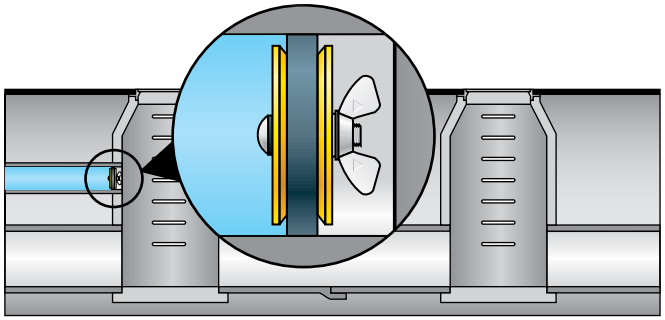

HUB-FIT GRIPPER® • CLEAN-OUT GRIPPER®

Hub-Fit Gripper® Plug Features:

- Ideal for use in hub fittings and in bell-end pipe
- Pressure rated for conducting DWV tests
- Made with glass-reinforced ABS plastic
- Yellow color for greater visibility in pipe
- Natural rubber O-ring for positive seal
- Galvanized carriage bolt to prevent corrosion
- Easy-to-install, extra large zinc wing nut – won't rust

Clean-Out Gripper® Plug Features:

- Guaranteed to seal most damaged threads
- Made with glass-reinforced ABS plastic
- Black color blends well with cast-iron pipe
- Stainless steel hardware
- NPT sizes, including hard to find 3½"
- Natural rubber threaded O-ring for positive seal

HUB-FIT GRIPPER

PART NUMBER	NOMINAL SIZE	USAGE RANGE	MAXIMUM BACK PRESSURE		LENGTH	PRODUCT WEIGHT
270528	2" (50 mm)	2.25"–2.45" (57–63 mm)	13 psi (0,9 bar)	30 ft. (9 M)	1.9" (48 mm)	3.3 oz (0.09 kg)
270538	3" (75 mm)	3.44"–3.53" (88–90 mm)	13 psi (0,9 bar)	30 ft. (9 M)	2.4" (61 mm)	9.5 oz (0.27 kg)
270548	4" (100 mm)	4.41"–4.53" (112–115 mm)	13 psi (0,9 bar)	30 ft. (9 M)	2.4" (61 mm)	11.9 oz (0.34 kg)

CLEAN-OUT GRIPPER

PART NUMBER	NOMINAL SIZE	USAGE RANGE	MAXIMUM BACK PRESSURE		LENGTH	PRODUCT WEIGHT
270168	2" (50 mm)	2.20"-2.5" (56-63 mm)	17 psi	40 ft.	1.9"	2.4 oz
270178	3" (75 mm)	3.23"-3.5" (82-88 mm)	17 psi	40 ft.	2.2"	3.5 oz
270138	3.5" (87.5 mm)	3.78"-4.25" (96-107 mm)	17 psi	40 ft.	2.2"	7.5 oz
270188	4" (100 mm)	4.22"-4.6" (107-116 mm)	17 psi	40 ft.	2.2"	9.7 oz

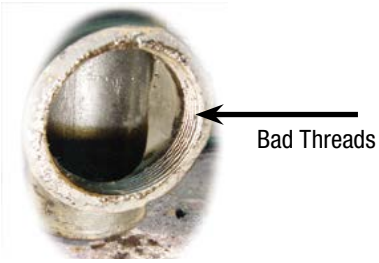

Problem

Solution

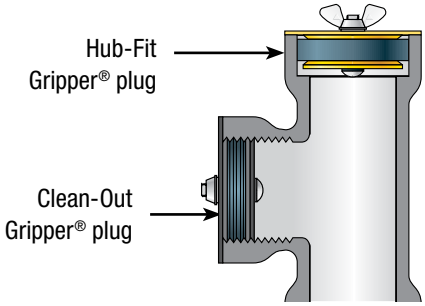

T-HANDLE GRIPPER®

T-Handle Aluminum Gripper® Plug Features:

- Ideal for long term applications
- 6" – 12" plugs are sized for concrete, clay, and SDR 26 and 35 pipe
- 15" and 18" plugs are sized for concrete and clay pipe sizes only
- Available with or without bypass
- Can be used for sewer air pressure tests

Equipped with:

- Heavy duty aluminum body and zinc plated steel T-handle
- Chemical resistant neoprene O-ring

Line Acceptance Test

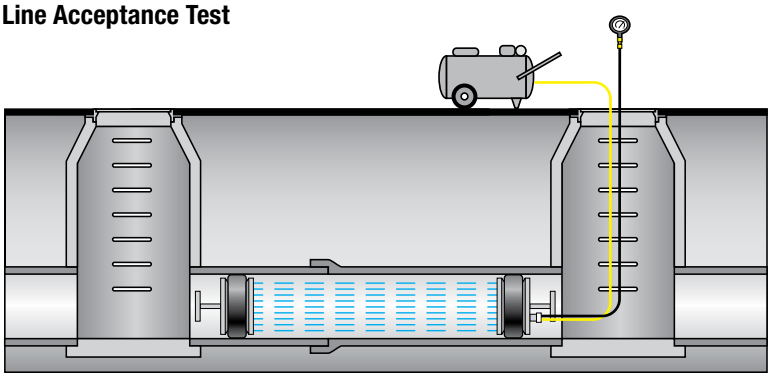

T-HANDLE GRIPPER WITH BYPASS

PART NUMBER	NOMINAL SIZE	USAGE RANGE	MAXIMUM BACK PRESSURE		LENGTH	PRODUCT WEIGHT	BYPASS DIAMETER (NPT)
272949	6" (150 mm)	5.7"–6.3" (144–160 mm)	17 psi (1,2 bar)	40 ft. (12 M)	9.7" (247 mm)	6.5 lbs (3 kg)	1/4" M
272957	8" (200 mm)	7.7"–8.3" (196–211 mm)	17 psi (1,2 bar)	40 ft. (12 M)	9.7" (247 mm)	9.5 lbs (4.3 kg)	3/4" M
272965	10" (250 mm)	9.8"–10.3" (248–262 mm)	17 psi (1,2 bar)	40 ft. (12 M)	9.7" (247 mm)	12.5 lbs (5.7 kg)	3/4" M
272973	12" (300 mm)	11.7"–12.3" (297–312 mm)	13 psi (0,9 bar)	30 ft. (9.1 M)	9.7" (247 mm)	16 lbs (7.3 kg)	3/4" M
272981	15" (380 mm)	14.8"–15.3" (377–388 mm)	13 psi (0,9 bar)	30 ft. (9.1 M)	9.7" (247 mm)	24 lbs (10.7 kg)	3/4" M
272998	18" (460 mm)	17.7"–18.3" (450–465 mm)	8.7 psi (0,61 bar)	20 ft. (6.1 M)	9.7" (247 mm)	31 lbs (14 kg)	3/4" M

T-HANDLE GRIPPER

PART NUMBER	NOMINAL SIZE	USAGE RANGE	MAXIMUM BACK PRESSURE		LENGTH	PRODUCT WEIGHT
272892	6" (150 mm)	5.7"–6.3" (144–160 mm)	17 psi (1,2 bar)	40 ft. (12 M)	9.7" (247 mm)	6 lbs (2.7 kg)
272906	8" (200 mm)	7.7"–8.3" (196–211 mm)	17 psi (1,2 bar)	40 ft. (12 M)	9.7" (247 mm)	9 lbs (4.1 kg)
272914	10" (250 mm)	9.8"–10.3" (248–262 mm)	17 psi (1,2 bar)	40 ft. (12 M)	9.7" (247 mm)	12 lbs (5.4 kg)
272922	12" (300 mm)	11.7"–12.3" (297–312 mm)	13 psi (0,9 bar)	30 ft. (9.1 M)	9.7" (247 mm)	15.5 lbs (7 kg)
272930	15" (380 mm)	14.8"–15.3" (377–388 mm)	13 psi (0,9 bar)	30 ft. (9.1 M)	9.7" (247 mm)	23 lbs (10.4 kg)
272888	18" (460 mm)	17.7"–18.3" (450–465 mm)	8.7 psi (0,61 bar)	20 ft. (6.1 M)	9.7" (247 mm)	30 lbs (13.6 kg)

ALWAYS BLOCK PLUGS WHEN CONDUCTING AIR TESTS.

IRON GRIP

Iron Grip Bypass Mechanical Plug Features:

- Easy, tool-free installation
- For permanent or temporary use
- For use in blocking or bypass applications
- Cast-iron design

Equipped with:

- Large installation wing-nut
- Natural rubber O-ring

Blocking Flow

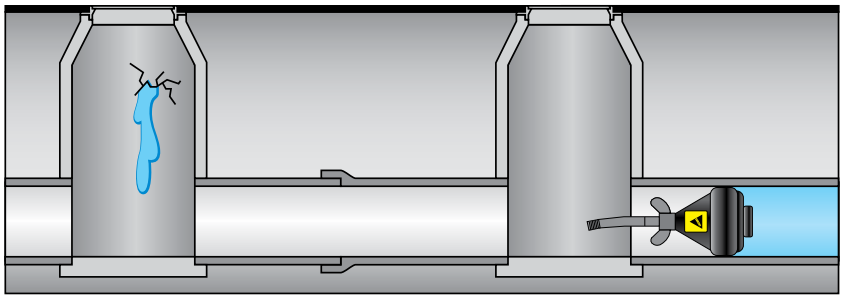

IRON GRIP

PART NUMBER	NOMINAL SIZE	USAGE RANGE	MAXIMUM BACK PRESSURE		LENGTH	PRODUCT WEIGHT	BYPASS DIAMETER (NPT)
268028	2" (50 mm)	1.94"–2.12" (49–54 mm)	13 psi (0,9 bar)	30 ft. (9,1 M)	9.75" (248 mm)	1.1 lbs (.5 kg)	3/8" M
268038	3" (75 mm)	2.82"–3.12" (75–80 mm)	11 psi (0,76 bar)	25 ft. (7.6 M)	12.75" (324 mm)	2.3 lbs (1.1 kg)	1/2" M
268048	4" (100 mm)	3.6"–4.06" (92–103 mm)	8.7 psi (0,61 bar)	20 ft. (6.1 M)	12.75" (324 mm)	3.1 lbs (1.4 kg)	1/2" M
268068	6" (150 mm)	5.57"–6.12" (142–155 mm)	4.3 psi (0,30 bar)	10 ft. (3 M)	12.75" (324 mm)	5.6 lbs (2.5 kg)	1/2" M
268088	8" (200 mm)	7.72"–8.2" (196–208 mm)	4.3 psi (0,30 bar)	10 ft. (3 M)	17" (432 mm)	11.5 lbs (5.9 kg)	1/2" M
268108	10" (250 mm)	9.8"–10.2" (249–260 mm)	3.5 psi (0,24 bar)	8 ft. (2.4 M)	17" (432 mm)	20 lbs (9.0 kg)	1/2" M
268128	12" (300 mm)	11.56"–12.2" (294–310 mm)	2.6 psi (0,18 bar)	6 ft. (1.8 M)	19.5" (500 mm)	28 lbs (12.8 kg)	1" M

ALWAYS BLOCK PLUGS WHEN CONDUCTING AIR TESTS.

ECON-O-GRIP® • PETRO ECON-O-GRIP®

Econ-O-Grip® Plug Features:

- Cost effective method for plugging open-ended pipe
- Works well as a pipe dust cover

Equipped with:

- Galvanized metal plates and bolts
- Natural rubber O-ring

Petro Econ-O-Grip® Plug Features:

- Cost effective, chemical-resistant plug
- Works well as a pipe dust cover

Equipped with:

- Stainless-steel bolt and plate
- Chemical resistant nitrile rubber

ECONO-O-GRIP

PART NUMBER	NOMINAL SIZE	USAGE RANGE	MAXIMUM BACK PRESSURE		LENGTH	PRODUCT WEIGHT
271519	1.5" (40 mm)	1.44"–1.65" (37–42 mm)	2 psi (0,14 bar)	5 ft. (1.4 M)	2.56" (65 mm)	3.5 oz (0.1 kg)
271527	2" (50 mm)	1.96"–2.25" (50–57 mm)	2 psi (0,14 bar)	5 ft. (1.4 M)	2.62" (67 mm)	5 oz (0.14 kg)
271535	3" (75 mm)	2.86"–3.25" (73–82 mm)	2 psi (0,14 bar)	5 ft. (1.4 M)	2.64" (67 mm)	8.5 oz (0.24 kg)
271543	4" (100 mm)	3.78"–4.5" (96–114 mm)	2 psi (0,14 bar)	5 ft. (1.4 M)	3.25" (82 mm)	12.48 oz (0.35 kg)
271551	5" (125 mm)	4.62"–5.3" (117–135 mm)	1 psi (0,07 bar)	2 ft. (0.7 M)	3.55" (90 mm)	1.1 lbs (0.5 kg)
271578	6" (150 mm)	5.62"–6.4" (143–162 mm)	1 psi (0,07 bar)	2 ft. (0.7 M)	3.19" (81 mm)	1.6 lbs (0.7 kg)

PETRO ECONO-O-GRIP

PART NUMBER	NOMINAL SIZE	USAGE RANGE	MAXIMUM BACK PRESSURE		LENGTH	PRODUCT WEIGHT
273318	1.5" (40 mm)	1.44"–1.65" (37–42 mm)	2 psi (0,14 bar)	5 ft. (1.4 M)	2.56" (65 mm)	3.5 oz (0.1 kg)
273328	2" (50 mm)	1.96"–2.25" (50–57 mm)	2 psi (0,14 bar)	5 ft. (1.4 M)	2.62" (67 mm)	5 oz (0.14 kg)
273338	3" (75 mm)	2.86"–3.25" (73–82 mm)	2 psi (0,14 bar)	5 ft. (1.4 M)	2.64" (67 mm)	8.5 oz (0.24 kg)
273348	4" (100 mm)	3.78"–4.3" (96–109 mm)	2 psi (0,14 bar)	5 ft. (1.4 M)	3.25" (82 mm)	12.48 oz (0.35 kg)
273358	5" (125 mm)	4.62"–5.3" (117–135 mm)	1 psi (0,07 bar)	2 ft. (0.7 M)	3.55" (90 mm)	1.1 lbs (0.5 kg)
273368	6" (150 mm)	5.62"–6.4" (143–162 mm)	1 psi (0,07 bar)	2 ft. (0.7 M)	3.19" (81 mm)	1.6 lbs (0.7 kg)

ALWAYS BLOCK PLUGS WHEN CONDUCTING AIR TESTS.

SURE-GRIP® • KWIK 'N SURE®

Sure-Grip® Plug Features:
- Polypropylene construction
- Fits all types of pipe at nominal sizes
- Permanent or temporary use

Equipped with:
- Natural rubber O-ring
- Can be tapped for use with cleanout cover

Kwik 'N Sure® Plug Features:
- Works in all types of pipe
- Ideal for plugging water line stub-outs
- Designed for high pressure applications

Equipped with:
- Natural rubber O-ring
- Wing nut on the .39"–1.25" sizes
- Hex nut on the 1.5"–5" sizes

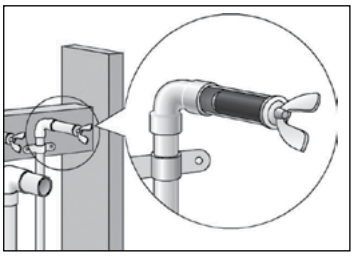

SURE-GRIP

PART NUMBER	NOMINAL SIZE	USAGE RANGE	MAXIMUM BACK PRESSURE		LENGTH	PRODUCT WEIGHT
271158	1.5" (40 mm)	1.48"–1.63" (40-42 mm)	22 psi (1,5 bar)	50 ft. (15 M)	2.5" (64 mm)	1.6 oz (0.7 kg)
271208	2" (50 mm)	1.89"–2.09" (48-53 mm)	22 psi (1,5 bar)	50 ft. (15 M)	3" (75 mm)	2.4 oz
271308	3" (75 mm)	2.89"–3.09" (73-79 mm)	13 psi (0,9 bar)	30 ft. (9 M)	3.7"(94 mm)	4.9 oz
271408	4" (100 mm)	3.87"–4.09" (98-103 mm)	13 psi (0,9 bar)	30 ft. (9 M)	3.5" (87 mm)	6.8 oz

KWIK 'N SURE

PART NUMBER	NOMINAL SIZE	USAGE RANGE	MAXIMUM BACK PRESSURE		LENGTH	PRODUCT WEIGHT
269832	0.39" (10 mm)	0.38"–0.43" (10–11 mm)	185 psi (12,8 bar)	428 ft. (128 M)	1.87" (48 mm)	1 oz (0.03 kg)
269840	0.5" (13 mm)	0.5"–0.56" (13–14 mm)	180 psi (12,4 bar)	415 ft. (124 M)	1.87" (48 mm)	1.5 oz (0.04 kg)
269867	0.75" (20 mm)	0.72"–0.87" (18–22 mm)	180 psi (12,4 bar)	415 ft. (124 M)	2.06" (52 mm)	1.6 oz (0.05 kg)
269875	1" (25 mm)	0.86"–1.02" (22–26 mm)	40 psi (2,8 bar)	92 ft. (28 M)	2.18" (55 mm)	1.9 oz (0.05 kg)
269883	1.25" (32 mm)	1.24"–1.43" (32–36 mm)	112 psi (7,7 bar)	258 ft. (77 M)	2.06" (52 mm)	3 oz (0.07 kg)
269891	1.5" (40 mm)	1.43"–1.53" (36–39 mm)	88 psi (6,1 bar)	203 ft. (62 M)	1.87" (48 mm)	3.4 oz (0.08 kg)
269905	2" (50 mm)	1.73"–2.06" (44–52 mm)	112 psi (7,7 bar)	258 ft. (77 M)	2.63" (67 mm)	7 oz (0.2 kg)
269913	2.5" (60 mm)	2.3"–2.78" ((58–71 mm)	72 psi (4,9 bar)	166 ft. (51 M)	2.75" (70 mm)	12 oz (0.3 kg)
269921	3" (75 mm)	2.73"–3.2" (69–81 mm)	28 psi (1,9 bar)	65 ft. (19 M)	3.12" (79 mm)	1.5 lbs (0.68 kg)
269948	4" (100 mm)	3.72"–4.5" (95–114 mm)	24 psi (1,7 bar)	55 ft. (17 M)	3.12" (79 mm)	2.6 lbs (1.2 kg)
269956	5" (125 mm)	4.8"–5.19" (122–132 mm)	8 psi (0,6)	18 ft. (6 M)	3.25" (82 mm)	2.25 lbs (1 kg)

ALWAYS BLOCK PLUGS WHEN CONDUCTING AIR TESTS.

MONITOR-WELL PLUGS

Monitor-Well Locking Plug Features:

- Designed to seal monitor wells
- Meets all EPA requirements for locking plugs
- Sized to seal Schedule 40 piping
- 2" and 4" sizes can also seal Schedule 5 pipe
- Works with Cherne's solid brass padlock or #2 Masterlock® padlock

Equipped with:

- Chemical and petroleum-resistant Estaloc™ plastic top and bottom plates
- Petroleum resistant nitrile O-ring
- Stainless steel carriage bolt
- Yellow chromate-coated locking latch

MONITOR-WELL

PART NUMBER	NOMINAL SIZE	USAGE RANGE	MAXIMUM BACK PRESSURE		LENGTH	PRODUCT WEIGHT
271648	1" – 1.25" (25-30 mm)	1"–1.38" (25–35 mm)	6.5 psi (0.,45 bar)	15 ft. (4.5 M)	2.5" (64 mm)	4.7 oz (0.14 kg)
271675	2" (50 mm)	1.9"–2.31" (49–59 mm)	6.5 psi (0.,45 bar)	15 ft. (4.5 M)	2.5" (64 mm)	4.5 oz (0.13 kg)
271669	3" (75 mm)	2.8"–3.1" (71–79 mm)	6.5 psi (0.,45 bar)	15 ft. (4.5 M)	2.6" (66 mm)	7.5 oz (0.21 kg)
271683	4" (100 mm)	3.8"–4.38" (97–111 mm)	6.5 psi (0.,45 bar)	15 ft. (4.5 M)	3.0" (76 mm)	12.5 oz (0.35 kg)
271691	6" (150 mm)	5.77"–6.08" (147–155 mm)	6.5 psi (0.,45 bar)	15 ft. (4.5 M)	3.98" (101 mm)	2 lbs (0.91 kg)
271735	8" (200 mm)	7.76"–8.03" (197–204 mm)	6.5 psi (0.,45 bar)	15 ft. (4.5 M)	3.98" (101 mm)	3 lbs (1.22 kg)
112941	Dolphin Padlock (All padlocks keyed alike.)					
002608	2" monitor well plug latch					
002618	3" & 4" monitor well plug latch					
008188	6" & 8" monitor well plug latch					

Monitor-Well Plug Installed

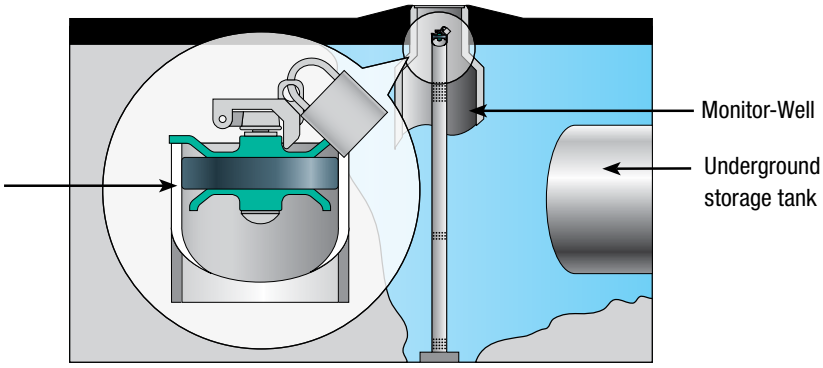

TEST-KAP™

Test-Kap™ Features:

- Made of flexible PVC
- Stainless steel hose clamp - will not rust
- Can be used on plastic, steel, copper, and cast iron pipe

TEST-KAP

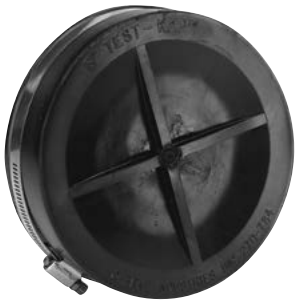

PART NUMBER	NOMINAL SIZE	MAXIMUM BACK PRESSURE	
270725	1.5" (40 mm)	13 psi	30 ft.
270733	2" (50 mm)	13 psi	30 ft.
270741	3" (75 mm)	13 psi	30 ft.
270768	4" (100 mm)	13 psi	30 ft.
270776	5" (125 mm)	13 psi	30 ft.
270784	6" (150 mm)	13 psi	30 ft.

ALWAYS BLOCK PLUGS WHEN CONDUCTING AIR TESTS.

Hi-Flow
Air-Loc Low-Pressure
Testing System
CHERNE

DEFLECTION GAUGES

DEFLECTION GAUGES

37 FIXED STEEL DEFLECTION GAUGES
39 ALUMINUM DEFLECTION GAUGE KITS
40 ALUMINUM DEFLECTION GAUGE FIN SETS
42 CORE MANDRELS • PROVING RINGS

FIXED STEEL DEFLECTION GAUGES

Deflection Gauges (mandrels) are used to test flexible sewer pipe for out-of-roundness or deflection per ASTM specifications D3034 and F679. This testing ensures that flexible pipe has been properly bedded and backfilled (ASTM D2321) to give optimal performance.

Other gauges can get hung up – causing a deflection test to fail, even though the pipe is within tolerance. Sized to .02", steel deflection gauge styles meet ASTM requirements.

Fixed Steel Style Deflection Gauge Features:

- Durable, zinc-plated construction resists corrosion
- Conforms to mandrel sizing specifications—blade length is equal to or greater than the nominal pipe size
- Nine-arm design ensures testing accuracy
- Open design allows gravel and debris pass-through

5% FIXED STEEL DEFLECTION GAUGES

DEFLECTION GAUGES FOR SDR-35 PIPE PER ASTM D3034 (4" – 15" DIA.)

PART NUMBER	NOMINAL SIZE	AVERAGE PIPE I.D.	BASE PIPE I.D.*	PIPE I.D. @ DEFL.	PRODUCT WT.
286068	6" (152.40 mm)	5.893" (149.68 mm)	5.742" (145.85 mm)	5.46" (138.68 mm)	5.0 lbs.
286078	8" (203.20 mm)	7.891" (200.43 mm)	7.665" (194.69 mm)	7.28" (184.91 mm)	7.0 lbs.
286088	10" (254.00 mm)	9.864" (250.55 mm)	9.563" (242.90 mm)	9.09" (230.89 mm)	8.0 lbs.
286098	12" (304.80 mm)	11.737" (298.12 mm)	11.360" (288.54 mm)	10.79" (274.07 mm)	9.0 lbs.
286108	15" (381.00 mm)	14.374" (365.10 mm)	13.897" (352.98 mm)	13.20" (335.28 mm)	13.5 lbs.

DEFLECTION GAUGES FOR SDR-26 PIPE PER ASTM D3034 (4" –15" DIA.)

PART NUMBER	NOMINAL SIZE	AVERAGE PIPE I.D.	BASE PIPE I.D.*	PIPE I.D. @ DEFL.	PRODUCT WT.
286008	6" (152.40 mm)	5.764" (146.41 mm)	5.612" (142.54 mm)	5.33" (135.38 mm)	5.0 lbs.
286018	8" (203.20 mm)	7.715" (195.96 mm)	7.488" (190.20 mm)	7.11" (180.59 mm)	7.0 lbs.
286028	10" (254.00 mm)	9.644" (244.96 mm)	9.342" (237.29 mm)	8.87" (225.30 mm)	8.0 lbs.
286038	12" (304.80 mm)	11.480" (291.59 mm)	11.102" (281.99 mm)	10.55" (267.97 mm)	9.0 lbs.
286048	15" (381.00 mm)	14.053" (356.95 mm)	13.575" (344.81 mm)	12.90" (327.66 mm)	13.5 lbs.

DEFLECTION GAUGES FOR PS 46 (SDR-35) PIPE PER ASTM F679 (18" – 48" DIA.)

PART NUMBER	NOMINAL SIZE	AVERAGE PIPE I.D.	BASE PIPE I.D.*	PIPE I.D. @ DEFL.	PRODUCT WT.
286118	18" (457.20 mm)	17.643" (448.13 mm)	17.054" (433.17 mm)	16.20" (411.48 mm)	15.0 lbs.
286278	21" (533.40 mm)	20.800" (528.32 mm)	20.098" (510.49 mm)	19.09" (484.89 mm)	18.0 lbs.
286288	24" (609.60 mm)	23.402" (594.41 mm)	22.586" (573.68 mm)	21.46" (545.08 mm)	21.0 lbs.

DEFLECTION GAUGES FOR PS 115 (SDR-26) PIPE PER ASTM F679 (18" – 48" DIA.)

PART NUMBER	NOMINAL SIZE	AVERAGE PIPE I.D.	BASE PIPE I.D.*	PIPE I.D. @ DEFL.	PRODUCT WT.
286058	18" (457.20 mm)	17.278" (438.86 mm)	16.688" (423.87 mm)	15.85" (402.59 mm)	15.0 lbs.
286528	21" (533.40 mm)	20.370" (517.40 mm)	19.666" (499.52 mm)	18.68" (474.47 mm)	18.0 lbs.
286538	24" (609.60 mm)	22.918" (582.12 mm)	22.102" (561.39 mm)	21.00" (533.40 mm)	21.0 lbs.

FIXED STEEL DEFLECTION GAUGES CONTINUED

7.5% FIXED STEEL DEFLECTION GAUGES

DEFLECTION GAUGES FOR SDR-35 PIPE PER ASTM D3034 (4" – 15" DIA.)					
PART NUMBER	NOMINAL SIZE	AVERAGE PIPE I.D.	BASE PIPE I.D.*	PIPE I.D. @ DEFL.	PRODUCT WT.
286188	6" (152.40 mm)	5.893" (149.68 mm)	5.742" (145.85 mm)	5.31" (134.90 mm)	5.0 lbs.
286198	8" (203.20 mm)	7.891" (200.43 mm)	7.665" (194.69 mm)	7.09" (180.10 mm)	7.0 lbs.
286208	10" (254.00 mm)	9.864" (250.55 mm)	9.563" (242.90 mm)	8.85" (224.80 mm)	8.0 lbs.
286218	12" (304.80 mm)	11.737" (298.12 mm)	11.360" (288.54 mm)	10.51" (267.00 mm)	9.0 lbs.
286228	15" (381.00 mm)	14.374" (365.10 mm)	13.897" (352.98 mm)	12.85" (326.40 mm)	13.5 lbs.

DEFLECTION GAUGES FOR SDR-26 PIPE PER ASTM D3034 (4" –15" DIA.)					
PART NUMBER	NOMINAL SIZE	AVERAGE PIPE I.D.	BASE PIPE I.D.*	PIPE I.D. @ DEFL.	PRODUCT WT.
286128	6" (152.40 mm)	5.764" (146.41 mm)	5.612" (142.54 mm)	5.19" (131.80 mm)	5.0 lbs.
286138	8" (203.20 mm)	7.715" (195.96 mm)	7.488" (190.20 mm)	6.93" (176.00 mm)	7.0 lbs.
286148	10" (254.00 mm)	9.644" (244.96 mm)	9.342" (237.29 mm)	8.64" (219.50 mm)	8.0 lbs.
286158	12" (304.80 mm)	11.480" (291.59 mm)	11.102" (281.99 mm)	10.27" (260.90 mm)	9.0 lbs.
286168	15" (381.00 mm)	14.053" (356.95 mm)	13.575" (344.81 mm)	12.56" (319.00 mm)	13.5 lbs.

DEFLECTION GAUGES FOR PS 46 (SDR-35) PIPE PER ASTM F679 (18" – 48" DIA.)					
PART NUMBER	NOMINAL SIZE	AVERAGE PIPE I.D.	BASE PIPE I.D.*	PIPE I.D. @ DEFL.	PRODUCT WT.
286238	18" (457.20 mm)	17.643" (448.13 mm)	17.054" (433.17 mm)	15.77" (400.56 mm)	15.0 lbs.
286248	21" (533.40 mm)	20.800" (528.32 mm)	20.098" (510.49 mm)	18.59" (472.19 mm)	18.0 lbs.
286258	24" (609.60 mm)	23.402" (594.41 mm)	22.586" (573.68 mm)	20.89" (530.61 mm)	21.0 lbs.

DEFLECTION GAUGES FOR PS 115 (SDR-26) PIPE PER ASTM F679 (18" – 48" DIA.)					
PART NUMBER	NOMINAL SIZE	AVERAGE PIPE I.D.	BASE PIPE I.D.*	PIPE I.D. @ DEFL.	PRODUCT WT.
286178	18" (457.20 mm)	17.278" (438.86 mm)	16.688" (423.87 mm)	15.44" (392.18 mm)	15.0 lbs.
286548	21" (533.40 mm)	20.370" (517.40 mm)	19.666" (499.52 mm)	18.19" (462.03 mm)	18.0 lbs.
286558	24" (609.60 mm)	22.918" (582.12 mm)	22.102" (561.39 mm)	20.44" (519.18 mm)	21.0 lbs.

Deflection Test

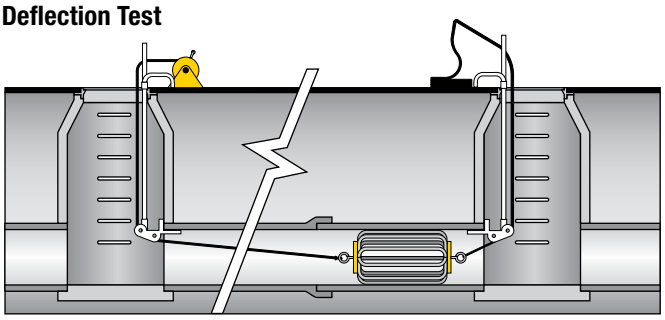

PS 46 closely relates to SDR 35 and PS 115 closely relates to SDR 26
*Base inside diameter (Base Pipe I.D.) allows for out of roundness and wall thickness tolerances as defined by ASTM standards.
For sizing and pricing contact Customer Service at chernesupport@oatey.com or 800-321-9532.

ALUMINUM DEFLECTION GAUGE KITS

Field Verification:
Cherne's Aluminum Fin Style Deflection Gauges are designed to be field verified by inspectors without the use of a proving ring. Simply place two fins end-to-end as pictured below (1) and measure the width. Add one inch to the mandrel (2) and you have the outside dimension of the gauge. Using this method simplifies the inspector's job of verifying sizes on deflection gauges.

Aluminum Fin Style Deflection Gauge Features:

- Lightweight, corrosion-resistant
- Field-verifiable without a proving ring
- Assembles without tools
- All sizes fit through standard 24" manhole
- Fins for 4"-15" gauges have skid size equal to the nominal pipe size—gauge will meet regional codes and will not tip in the line
- Nine-fin design ensures testing accuracy
- Open design allows gravel and debris pass-through

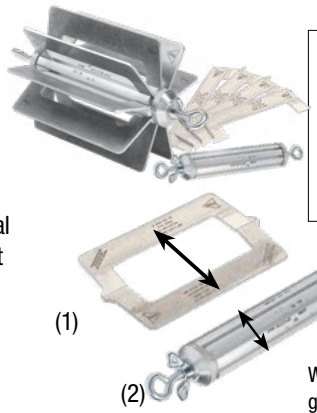

Deflection Gauge Kit

Width +1" = Deflection gauge outside diameter

5% ALUMINUM FIN SET DEFLECTION GAUGE KITS (FIN SETS, CORE MANDREL AND CARRYING CASE)

KITS FOR SDR 26 PIPE PER ASTM D3034

PART NUMBER	NOMINAL SIZE	AVERAGE PIPE I.D.	BASE PIPE I.D.*	PIPE I.D. @ DEFL.	PRODUCT WT.
285688	6" (152.40 mm)	5.764" (146.41 mm)	5.612" (142.54 mm)	5.33" (135.38 mm)	18 lbs.
	8" (203.20 mm)	7.715" (195.96 mm)	7.488" (190.20 mm)	7.11" (180.59 mm)	
	10" (254.00 mm)	9.644" (244.96 mm)	9.342" (237.29 mm)	8.87" (225.30 mm)	
285698	8" (203.20 mm)	7.715" (195.96 mm)	7.488" (190.20 mm)	7.11" (180.59 mm)	19 lbs.
	10" (254.00 mm)	9.644" (244.96 mm)	9.342" (237.29 mm)	8.87" (2 25.30 mm)	
	12" (304.80 mm)	11.480" (291.59 mm)	11.102" (281.99 mm)	10.55" (267.97 mm)	

KITS FOR SDR 35 PIPE PER ASTM D3034

PART NUMBER	NOMINAL SIZE	AVERAGE PIPE I.D.	BASE PIPE I.D.*	PIPE I.D. @ DEFL.	PRODUCT WT.
285005	6" (152.40 mm)	5.893" (149.68 mm)	5.742" (145.85 mm)	5.46" (138.68 mm)	18 lbs.
	8" (203.20 mm)	7.891" (200.43 mm)	7.665" (194.69 mm)	7.28" (184.91 mm)	
	10" (254.00 mm)	9.864" (250.55 mm)	9.563" (242.90 mm)	9.09" (230.89 mm)	
285021	8" (203.20 mm)	7.891" (200.43 mm)	7.665" (194.69 mm)	7.28" (184.91 mm)	19 lbs.
	10" (254.00 mm)	9.864" (250.55 mm)	9.563" (242.90 mm)	9.09" (230.89 mm)	
	12" (304.80 mm)	11.737" (298.12 mm)	11.360" (288.54 mm)	10.79" (274.07 mm)	

7.5% ALUMINUM FIN SET DEFLECTION GAUGE KITS (FIN SETS, CORE MANDREL AND CARRYING CASE)

KITS FOR SDR 26 PIPE PER ASTM D3034

PART NUMBER	NOMINAL SIZE	AVERAGE PIPE I.D.	BASE PIPE I.D.*	PIPE I.D. @ DEFL.	PRODUCT WT.
Custom Kit Consult Factory	6" (152.40 mm)	5.764" (146.41 mm)	5.612" (142.54 mm)	5.19" (131.80 mm)	18 lbs.
	8" (203.20 mm)	7.715" (195.96 mm)	7.488" (190.20 mm)	6.93" (176.00 mm)	
	10" (254.00 mm)	9.644" (244.96 mm)	9.342" (237.29 mm)	8.64" (219.50 mm)	
Custom Kit Consult Factory	8" (203.20 mm)	7.715" (195.96 mm)	7.488" (190.20 mm)	6.93" (176.00 mm)	19 lbs.
	10" (254.00 mm)	9.644" (244.96 mm)	9.342" (237.29 mm)	8.64" (219.50 mm)	
	12" (304.80 mm)	11.480" (291.59 mm)	11.102" (281.99 mm)	10.27" (260.90 mm)	

KITS FOR SDR 35 PIPE PER ASTM D3034

PART NUMBER	NOMINAL SIZE	AVERAGE PIPE I.D.	BASE PIPE I.D.*	PIPE I.D. @ DEFL.	PRODUCT WT.
285013	6" (152.40 mm)	5.893" (149.68 mm)	5.742" (145.85 mm)	5.31" (134.90 mm)	18 lbs.
	8" (203.20 mm)	7.891" (200.43 mm)	7.665" (194.69 mm)	7.09" (180.10 mm)	
	10" (304.80 mm)	11.737" (298.12 mm)	11.360" (288.54 mm)	10.51" (267.00 mm)	
285048	8" (203.20 mm)	7.891" (200.43 mm)	7.665" (194.69 mm)	7.09" (180.10 mm)	19 lbs.
	10" (254.00 mm)	9.864" (250.55 mm)	9.563" (242.90 mm)	8.85" (224.80 mm)	
	12" (304.80 mm)	11.737" (298.12 mm)	11.360" (288.54 mm)	10.51" (267.00 mm)	

Base inside diameter (Base Pipe I.D.) allows for out of roundness and wall thickness tolerances as defined by ASTM standards.

ALUMINUM DEFLECTION GAUGE FIN SETS

5% DEFLECTION ALUMINUM FINS SETS

ALUMINUM FIN SETS FOR SDR-35 PIPE PER ASTM D3034 (4" – 15" DIA.)

PART NUMBER	NOMINAL SIZE	AVERAGE PIPE I.D.	BASE PIPE I.D.*	PIPE I.D. @ DEFL.	PRODUCT WT.
285056	4" (101.60 mm)	NA	NA	3.696" (93.88 mm)	1.5 lbs.
285072	6" (152.40 mm)	5.893" (149.68 mm)	5.742" (145.85 mm)	5.46" (138.68 mm)	2.0 lbs.
285080	8" (203.20 mm)	7.891" (200.43 mm)	7.665" (194.69 mm)	7.28" (184.91 mm)	2.5 lbs.
285099	10" (254.00 mm)	9.864" (250.55 mm)	9.563" (242.90 mm)	9.09" (230.89 mm)	3.0 lbs.
285102	12" (304.80 mm)	11.737" (298.12 mm)	11.360" (288.54 mm)	10.79" (274.07 mm)	4.0 lbs.
285110	15" (381.00 mm)	14.374" (365.10 mm)	13.897" (352.98 mm)	13.20" (335.28 mm)	5.0 lbs.

ALUMINUM FIN SETS FOR SDR-26 PIPE PER ASTM D3034 (4" – 15" DIA.)

PART NUMBER	NOMINAL SIZE	AVERAGE PIPE I.D.	BASE PIPE I.D.*	PIPE I.D. @ DEFL.	PRODUCT WT.
Custom	4" (101.60 mm)	NA	NA	Consult Factory	1.5 lbs.
285638	6" (152.40 mm)	5.764" (146.41 mm)	5.612" (142.54 mm)	5.33" (135.38 mm)	2.0 lbs.
285648	8" (203.20 mm)	7.715" (195.96 mm)	7.488" (190.20 mm)	7.11" (180.59 mm)	2.5 lbs.
285658	10" (254.00 mm)	9.644" (244.96 mm)	9.342" (237.29 mm)	8.87" (225.30 mm)	3.0 lbs.
285668	12" (304.80 mm)	11.480" (291.59 mm)	11.102" (281.99 mm)	10.55" (267.97 mm)	4.0 lbs.
285678	15" (381.00 mm)	14.053" (356.95 mm)	13.575" (344.81 mm)	12.90" (327.66 mm)	5.0 lbs.

ALUMINUM FIN SETS FOR PS 46 (SDR-35) PIPE PER ASTM F679 (18" – 48" DIA.)

PART NUMBER	NOMINAL SIZE	AVERAGE PIPE I.D.	BASE PIPE I.D.*	PIPE I.D. @ DEFL.	PRODUCT WT.
285536	18" (457.20 mm)	17.643" (448.13 mm)	17.054" (433.17 mm)	16.20" (411.48 mm)	8.0 lbs.
285544	21" (533.40 mm)	20.800" (528.32 mm)	20.098" (510.49 mm)	19.09" (484.89 mm)	10.0 lbs.
285552	24" (609.60 mm)	23.402" (594.41 mm)	22.586" (573.68 mm)	21.46" (545.08 mm)	11.0 lbs.
285595	27" (685.80 mm)	26.374" (669.90 mm)	25.446" (646.33 mm)	24.17" (613.92 mm)	12.0 lbs.
285748	30" CIOD (762.00 mm)	30.192" (766.88 mm)	29.151" (740.44 mm)	27.69" (703.33 mm)	13.0 lbs.
285758	36" CIOD (914.40 mm)	36.135" (917.83 mm)	34.869" (885.67 mm)	33.13" (841.50 mm)	15.0 lbs.
285768	42" CIOD (1066.80 mm)	41.984" (1066.39 mm)	40.491" (1028.47 mm)	38.47" (977.14 mm)	17.0 lbs.
285788	48" CIOD (1219.20 mm)	47.927" (1217.35 mm)	46.209" (1173.71 mm)	43.90" (1115.06 mm)	19.0 lbs.

ALUMINUM FIN SETS FOR PS 115 (SDR-26) PIPE PER ASTM F679 (18" – 48" DIA.)

PART NUMBER	NOMINAL SIZE	AVERAGE PIPE I.D.	BASE PIPE I.D.*	PIPE I.D. @ DEFL.	PRODUCT WT.
284688	18" (457.20 mm)	17.278" (438.86 mm)	16.688" (423.87 mm)	15.85" (402.59 mm)	8.0 lbs.
284698	21" (533.40 mm)	20.370" (517.40 mm)	19.666" (499.52 mm)	18.68" (474.47 mm)	10.0 lbs.
284708	24" (609.60 mm)	22.918" (582.12 mm)	22.102" (561.39 mm)	21.00" (533.40 mm)	11.0 lbs.
284718	27" (685.80 mm)	25.829" (656.06 mm)	24.899" (632.43 mm)	23.65" (600.71 mm)	12.0 lbs.
284728	30" CIOD (762.00 mm)	29.566" (750.97 mm)	28.523" (724.48 mm)	27.10" (688.34 mm)	13.0 lbs.
284738	36" CIOD (914.40 mm)	35.389" (898.88 mm)	34.120" (866.65 mm)	32.41" (823.21 mm)	15.0 lbs.
284748	42" CIOD (1066.80 mm)	41.116" (1044.35 mm)	39.621" (1006.37 mm)	37.64" (956.06 mm)	17.0 lbs.
284758	48" CIOD (1219.20 mm)	46.937" (1192.20 mm)	45.216" (1148.49 mm)	42.96" (1091.18 mm)	19.0 lbs.

7.5% DEFLECTION ALUMINUM FINS SETS

ALUMINUM FIN SETS FOR SDR-35 PIPE PER ASTM D3034 (4" – 15" DIA.)					
PART NUMBER	**NOMINAL SIZE**	**AVERAGE PIPE I.D.**	**BASE PIPE I.D.***	**PIPE I.D. @ DEFL.**	**PRODUCT WT.**
285137	4" (101.60 mm)	NA	NA	3.598" (91.39 mm)	1.5 lbs.
285153	6" (152.40 mm)	5.893" (149.68 mm)	5.742" (145.85 mm)	5.31" (134.90 mm)	2.0 lbs.
285161	8" (203.20 mm)	7.891" (200.43 mm)	7.665" (194.69 mm)	7.09" (180.10 mm)	2.5 lbs.
285188	10" (254.00 mm)	9.864" (250.55 mm)	9.563" (242.90 mm)	8.85" (224.80 mm)	3.0 lbs.
285196	12" (304.80 mm)	11.737" (298.12 mm)	11.360" (288.54 mm)	10.51" (267.00 mm)	4.0 lbs.
285218	15" (381.00 mm)	14.374" (365.10 mm)	13.897" (352.98 mm)	12.85" (326.40 mm)	5.0 lbs.

ALUMINUM FIN SETS FOR SDR-26 PIPE PER ASTM D3034 (4" – 15" DIA.)					
PART NUMBER	**NOMINAL SIZE**	**AVERAGE PIPE I.D.**	**BASE PIPE I.D.***	**PIPE I.D. @ DEFL.**	**PRODUCT WT.**
Custom	4" (101.60 mm)	Consult Factory	Consult Factory	Consult Factory	1.5 lbs.
017378	6" (152.40 mm)	5.764" (146.41 mm)	5.612" (142.54 mm)	5.19" (131.80 mm)	2.0 lbs.
284658	8" (203.20 mm)	7.715" (195.96 mm)	7.488" (190.20 mm)	6.93" (176.00 mm)	2.5 lbs.
284668	10" (254.00 mm)	9.644" (244.96 mm)	9.342" (237.29 mm)	8.64" (219.50 mm)	3.0 lbs.
284678	12" (304.80 mm)	11.480" (291.59 mm)	11.102" (281.99 mm)	10.27" (260.90 mm)	4.0 lbs.
285778	15" (381.00 mm)	14.053" (356.95 mm)	13.575" (344.81 mm)	12.56" (319.00 mm)	5.0 lbs.

ALUMINUM FIN SETS FOR PS 46 (SDR-35) PIPE PER ASTM F679 (18" – 48" DIA.)					
PART NUMBER	**NOMINAL SIZE**	**AVERAGE PIPE I.D.**	**BASE PIPE I.D.***	**PIPE I.D. @ DEFL.**	**PRODUCT WT.**
285560	18" (457.20 mm)	17.643" (448.13 mm)	17.054" (433.17 mm)	15.77" (400.56 mm)	8.0 lbs
285579	21" (533.40 mm)	20.800" (528.32 mm)	20.098" (510.49 mm)	18.59" (472.19 mm)	10.0 lbs.
285587	24" (609.60 mm)	23.402" (594.41 mm)	22.586" (573.68 mm)	20.89" (530.61 mm)	11.0 lbs.
285609	27" (685.80 mm)	26.374" (669.90 mm)	25.446" (646.33 mm)	23.53" (597.66 mm)	12.0 lbs.
285708	30" CIOD (762.00 mm)	30.192" (766.88 mm)	29.151" (740.44 mm)	26.96" (684.78 mm)	13.0 lbs.
285718	36" CIOD (914.40 mm)	36.135" (917.83 mm)	34.869" (885.67 mm)	32.25" (819.15 mm)	15.0 lbs.
285728	42" CIOD (1066.80 mm)	41.984" (1066.39 mm)	40.491" (1028.47 mm)	37.45" (951.23 mm)	17.0 lbs.
285738	48" CIOD (1219.20 mm)	47.927" (1217.35 mm)	46.209" (1173.71 mm)	42.74" (1085.60 mm)	19.0 lbs.

ALUMINUM FIN SETS FOR PS 115 (SDR-26) PIPE PER ASTM F679 (18" – 48" DIA.)					
PART NUMBER	**NOMINAL SIZE**	**AVERAGE PIPE I.D.**	**BASE PIPE I.D.***	**PIPE I.D. @ DEFL.**	**PRODUCT WT.**
284768	18" (457.20 mm)	17.278" (438.86 mm)	16.688" (423.87 mm)	15.44" (392.18 mm)	8.0 lbs.
284778	21" (533.40 mm)	20.370" (517.40 mm)	19.666" (499.52 mm)	18.19" (462.03 mm)	10.0 lbs.
284788	24" (609.60 mm)	22.918" (582.12 mm)	22.102" (561.39 mm)	20.44" (519.18 mm)	11.0 lbs.
284798	27" (685.80 mm)	25.829" (656.06 mm)	24.899" (632.43 mm)	23.03" (584.96 mm)	12.0 lbs.
284808	30" CIOD (762.00 mm)	29.566" (750.97 mm)	28.523" (724.48 mm)	26.38" (670.05 mm)	13.0 lbs.
284818	36" CIOD (914.40 mm)	35.389" (898.88 mm)	34.120" (866.65 mm)	31.56" (801.62 mm)	15.0 lbs.
284828	42" CIOD (1066.80 mm)	41.116" (1044.35 mm)	39.621" (1006.37 mm)	36.65" (930.91 mm)	17.0 lbs.
284838	48" CIOD (1219.20 mm)	46.937" (1192.20 mm)	45.216" (1148.49 mm)	41.82" (1062.23 mm)	19.0 lbs.

PS 46 closely relates to SDR 35 and PS 115 closely relates to SDR 26

*Base inside diameter (Base Pipe I.D.) allows for out of roundness and wall thickness tolerances as defined by ASTM standards.

For sizing and pricing contact Customer Service at chernesupport@oatey.com or 800-321-9532.

CORE MANDRELS · PROVING RINGS

CORE MANDRELS FOR ALUMINUM FINNED DEFLECTION GAUGES

PART NUMBER	NOMINAL SIZE
285617	10" mandrel for 4" – 15" aluminum fin sets
285250	24" mandrel for 18" – 48" aluminum fin sets
285488	48" mandrel for 48" – 60" aluminum fin sets
030268	Deflection gauge case. Holds 10" mandrel, and three fin sets (6"–12" fin sets)

Proving Ring Features:

- Used to verify deflection gauge sizes
- Standard sizes: 6"–18" SDR 35 5% deflection and 8"–12" SDR 35 7.5% deflection

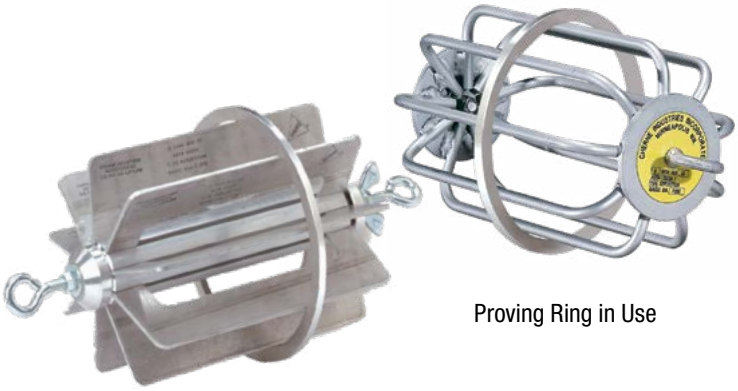

Proving Ring in Use

PROVING RINGS

For quick and easy size verification

PART NUMBER	NOMINAL SIZE	PIPE	DEFLECTION	PRODUCT WEIGHT
073199	6" (150 mm)	SDR 35	5%	4 oz (.11 kg)
073202	8" (200 mm)	SDR 35	5%	4 oz (.11 kg)
073253	8" (200 mm)	SDR 35	7.5%	4 oz (.11 kg)
073210	10" (250 mm)	SDR 35	5%	6 oz (.17 kg)
073261	10" (250 mm)	SDR 35	7.5%	6 oz (.17 kg)
073229	12" (300 mm)	SDR 35	5%	6 oz (.17 kg)
073288	12" (300 mm)	SDR 35	7.5%	6 oz (.17 kg)
073237	15" (380 mm)	SDR 35	5%	7 oz (.20 kg)
075868	18" (460 mm)	SDR 35	5%	7 oz (.20 kg)

For sizing and pricing contact Customer Service at chernesupport@oatey.com or 800-321-9532

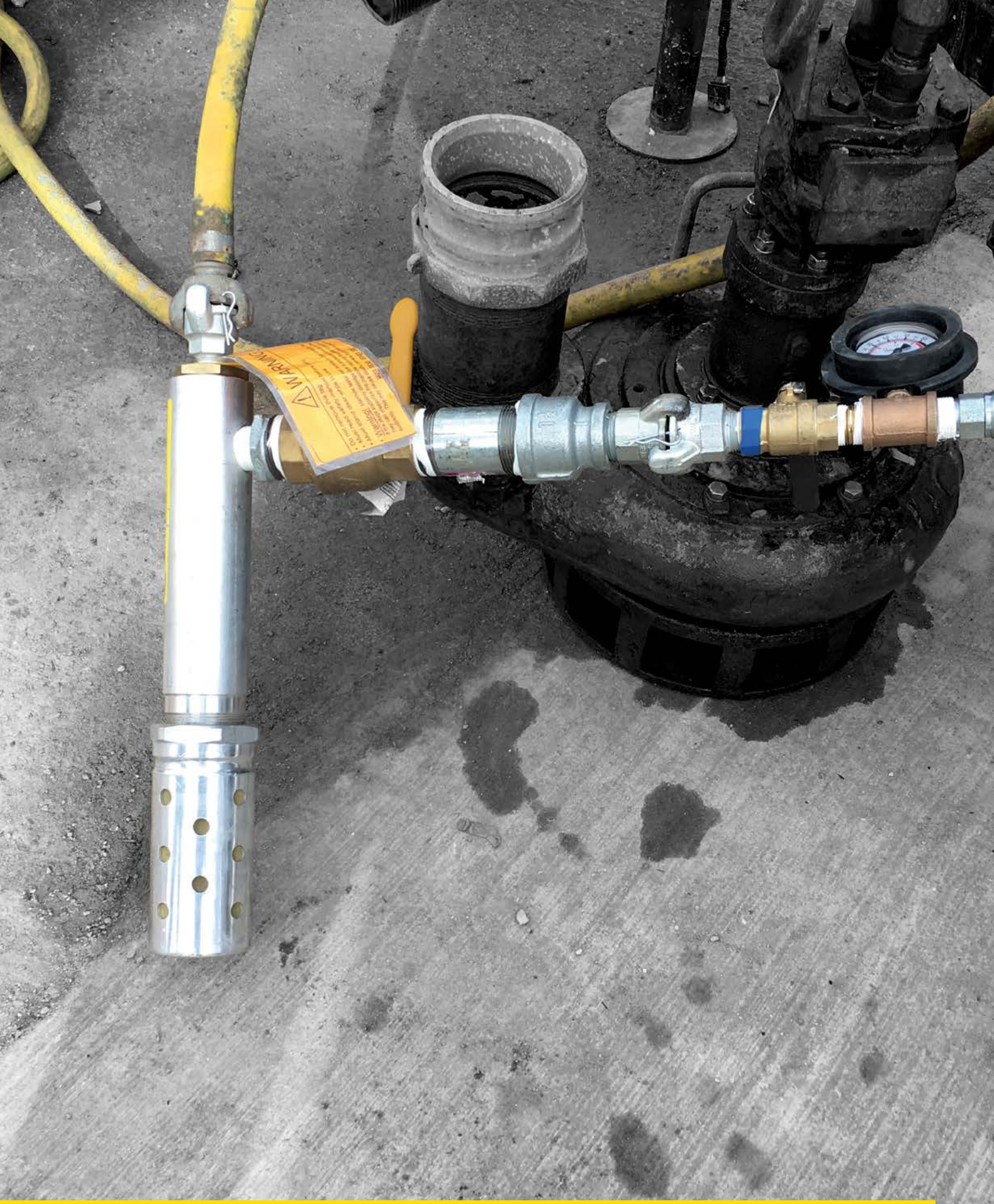
WARNING

TESTING EQUIPMENT

TESTING EQUIPMENT

45 AIR-LOC® PRESSURE TESTING
47 AIR-LOC® TESTING PANEL
48 AIR-LOC® PRESSURE TESTING HOSES
49 MANHOLE JACKS • ROLLERS • WINCH
50 AIR-LOC® PRESSURE TESTING PROCEDURE
51 AIR-LOC® MANHOLE TESTERS
52 AIR-LOC® VACUUM EQUIPMENT
53 AIR-LOC® STRINGER • VENTILATORS
54 AIR-LOC® SMOKE TESTING
55 AIR-LOC® JOINT TESTERS
56 AQUA-LOC® HYDROSTATIC TEST PUMPS

AIR-LOC® PRESSURE TESTING

The Cherne Air-Loc® Low Pressure Air-Testing System
has been successfully used for testing sewer pipe installations since the 1960s. This method of testing pipelines has proven to be the fastest, most economical and accurate method of testing pipe. It allows you to perform tests as prescribed by ASTM C828, C924, and F1417. (Procedures on page 50.)

Air-Loc® Line Acceptance Kit (Part #253398 - 75 lbs)
Cherne's Line Acceptance Kit is used to perform low pressure air tests on newly installed sewer lines. The Line Acceptance Kit includes all items needed to conduct the test except an air compressor and two pipe plugs.

Air-Loc® Plug Features:

- Air-Loc Leak Locator Plugs are designed for both low-pressure sewer line acceptance tests as well as leak location testing
- Color coded inflation ports match hose and panel of Air-Loc® system
- Flexible internal hoses and air fittings make these plugs the best in the business

See page 21-22 for more information

Line Acceptance Kit with Storage Container

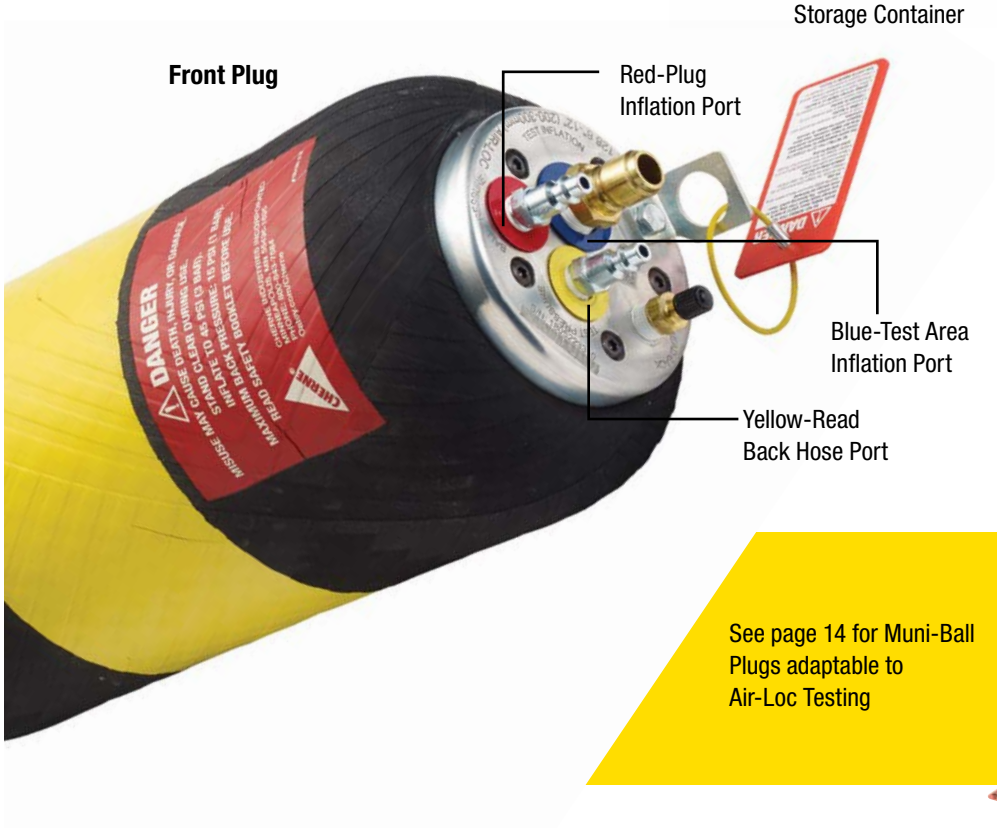

See page 14 for Muni-Ball Plugs adaptable to Air-Loc Testing

AIR-LOC® PRESSURE TESTING CONTINUED

Air-Loc® Conversion Kit Features:
- Converts Muni-Ball® plugs to air test plugs
- Available for line acceptance and/or leak location tests

Equipped with:
- Colored discs coded to hose connections
- Conversion set up instructions

HI-FLOW™ LINE ACCEPTANCE CONVERSION KITS (3/8" AND 3/4" HI FLOW HOSE)

PART NUMBER	DESCRIPTION	PRODUCT WEIGHT
041748	2" M NPT Plug conversion kit	3.3 lbs (1.5 kg)
041758	3" M NPT Plug conversion kit	2.5 lbs (1.13 kg)
041768	4" M NPT Plug conversion kit	4.25 lbs (2 kg)
049108	2" F NPT Cap conversion kit	3.3 lbs (1.5 kg)
041778	2½" F NPT Cap conversion kit	2.5 lbs (1.13 kg)
041788	4" F NPT Cap conversion kit	6.25 lbs (2.84 kg)
041718	6" F NPT PVC Cap conversion kit	2.75 lbs (1.25 kg)

Hi-Flow™ Line Acceptance Conversion Kit Cap Version
3/4" Test Pressure quick connect

Hi-Flow™ Line Acceptance Conversion Kit Plug Version
3/4" Test Pressure quick connect

LINE ACCEPTANCE / LEAK LOCATION CONVERSION KITS (FOR 3/8" HOSES)

PART NUMBER	DESCRIPTION	PRODUCT WEIGHT
028588	¾" M NPT Plug conversion kit with quick-disconnect fittings	1.5 lbs (.7 kg)
028598	1½" M NPT Plug conversion kit with quick-disconnect fittings	2.75 lbs (1.25 kg)
028608	2" M NPT Plug conversion kit with quick-disconnect fittings	3.3 lbs (1.5 kg)
028618	3" M NPT Plug conversion kit with quick-disconnect fittings	2.5 lbs (1.13 kg)
028628	4" M NPT Plug conversion kit with quick-disconnect fittings	4.5 lbs (2 kg)
049028	2" F NPT Cap conversion kit with quick-disconnect fittings	3.3 lbs (1.5 kg)
028648	2½" F NPT Cap conversion kit with quick-disconnect fittings	2.5 lbs (1.13 kg)
028668	4" F NPT Cap conversion kit with quick-disconnect fittings	6.25 lbs (2.84 kg)

Leak Location Conversion Kit Plug Version
3/8" Leak Location quick connect

Line Acceptance Conversion Kit Cap Version
3/8" Leak Location quick connect

AIR-LOC® PRESSURE TESTING PANEL

Hi-Flow™ Air-Loc® Control Panel
Panel includes gauges to monitor compressor pressure, plug pressure and test pressure, all in a sturdy case. Panel also has regulators to control plug and test pressure. Panel can be used with either 3/8" or 3/4" fill hose, accomplished by simply turning a valve. Panel is designed to work with air compressors fitted with either crow's foot or standard quick disconnect fittings.

AIR-LOC PRESSURE TESTING PANEL

PART NUMBER	DESCRIPTION
304718	Control Panel
026358	0–10 PSI Test Pressure Gauge – Retarded increments from 11–30 PSI
014828	0–60 PSI Ball Pressure Gauge
014848	0–160 PSI Compressor Gauge
043048 OA	3-Way Valve
296643	Regulator

AIR-LOC® PRESSURE TESTING HOSES

Triple Hose
The 3/8" diameter hose assembly is used to connect the Air-Loc® Panel to the front plug. Triple hose is color-coded, making connections easy to understand. Hose features locking quick disconnects for convenience and safety. Hose also includes strain relief to protect hose and connections from damage.

Hi-Flow™ Triple Hose available with 3/4 blue test pressure hose for quick exhausting

22' Interconnect Hose (#043338 – 4 lbs)
The interconnect hose is used to attach the front and back air test plugs when conducting a leak location test. This hose includes a cable for attaching to the pipe plugs to take strain off the hose during the leak location process.

253388 Air-Loc® Triple Hose Reel
The Triple hose reel includes a 400' triple hose, and mounting plate for the control panel. Control panel is sold separately.

AIR-LOC PRESSURE TESTING HOSES

Triple Hose

PART NUMBER	DESCRIPTION
035268	25' Triple Hose
257038	50' Triple Hose
257188	400' Triple Hose
257108	25' Hi-Flow Triple Hose
257098	50' Hi-Flow Triple Hose

22' Interconnect Hose

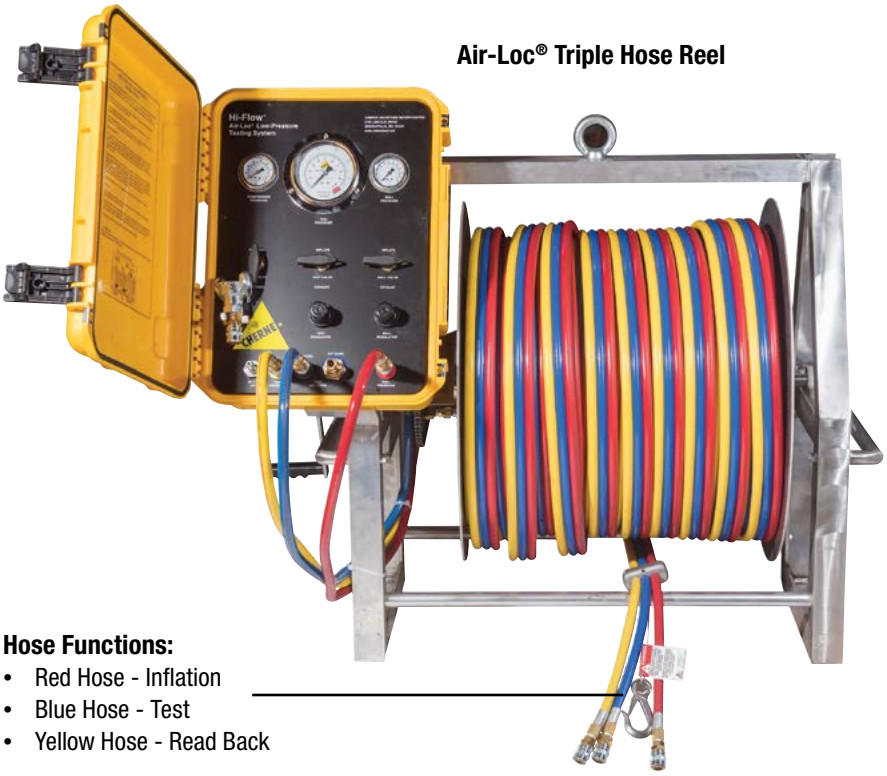

Air-Loc® Triple Hose Reel

Hose Functions:
- Red Hose - Inflation
- Blue Hose - Test
- Yellow Hose - Read Back

MANHOLE JACKS · ROLLERS · WINCH

Manhole Jack (Hose Guide) Part #056228
- Guides air hoses and cables at pipe invert in manhole
- Zinc-plated for corrosion resistance
- Fits pipe 5"–24"
- Includes eye bolt for securing rope and ease of retrieval

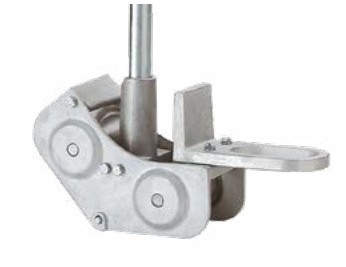

Manhole Roller (Hose Guide) Part #056707
- Guides air hoses and cables at pipe invert in manhole
- Adjustable push-pin pole system
- Installs at surface - no need to enter manhole

Manhole Winch Part #253318
- Drags plugs in leak location testing
- Feeds Jet-Ball™ down line for sewer cleaning
- Normal pull-strength up to 550 pounds
- 3/32" diameter steel cable

MANHOLE COVER HOOKS

Manhole Cover Hooks
- Forged 5/8" hexagonal steel for extra strength
- Available with flat or 90º handles

PART NUMBER	DESCRIPTION
015443	24" Manhole cover hook with 90° handle
015438	36" Manhole cover hook with 90° handle
251429	24" Manhole cover hook with flat handle
251438	36" Manhole cover hook with flat handle

Air-Loc® Line Stringer
String lines between manholes quickly for segment testing with a Cherne Line Stringer.

See page 53

AIR-LOC® PRESSURE TESTING PROCEDURE

Air-Loc® Line Acceptance Test Procedure:

1. Install Back Plug. Attach poly lift line to pipe plug and place plug in line to be tested. Inflate plug to proper inflation pressure from above ground and out of the danger zone using an air compressor or hand pump to the rated inflation pressure.
2. Insert Front Plug. Connect triple hose assembly to front plug and insert plug into line. Connect other end of triple hose to Air-Loc® Control Panel.
3. Conduct Test. Connect air compressor to control panel. Then inflate front plug to proper inflation pressure. Introduce air through control panel until test pressure is achieved. Monitor pressure for the time designated for the test. If the pressure holds for the designated time losing one psi or less, the line passes and is "Accepted".

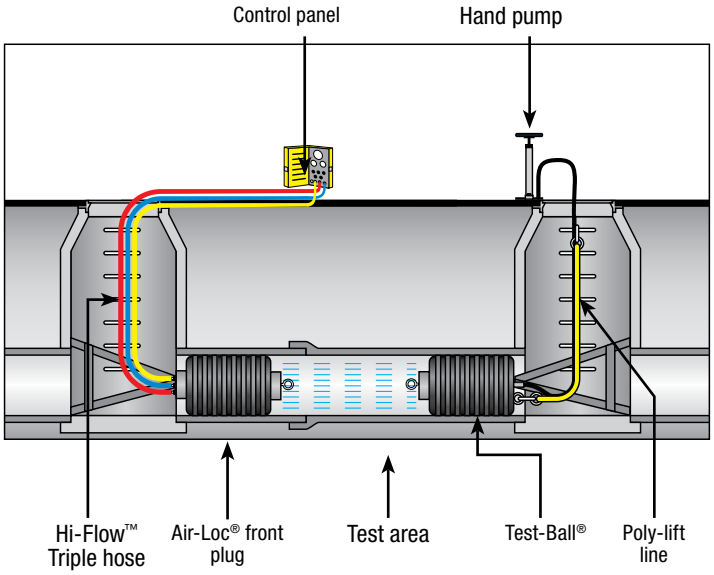

Leak Location Test Procedure:

A leak location test needs to be conducted if the line acceptance test fails. The leak location test procedure is as follows:

1. String pipe using Cherne's Air-Loc® Line Stringer or other method, attaching winch cable which is then pulled back through line.
2. Attach two pipe plugs connected together with interconnect hose to winch cable and place in pipeline.
3. Connect 400' triple hose to front plug.
4. Conduct pressure test on first 22' segment of sewer line and record results.
5. Advance plugs forward 22' using the winch and conduct test, once again recording results. Repeat procedure until entire line has been tested, and the leak has been located.

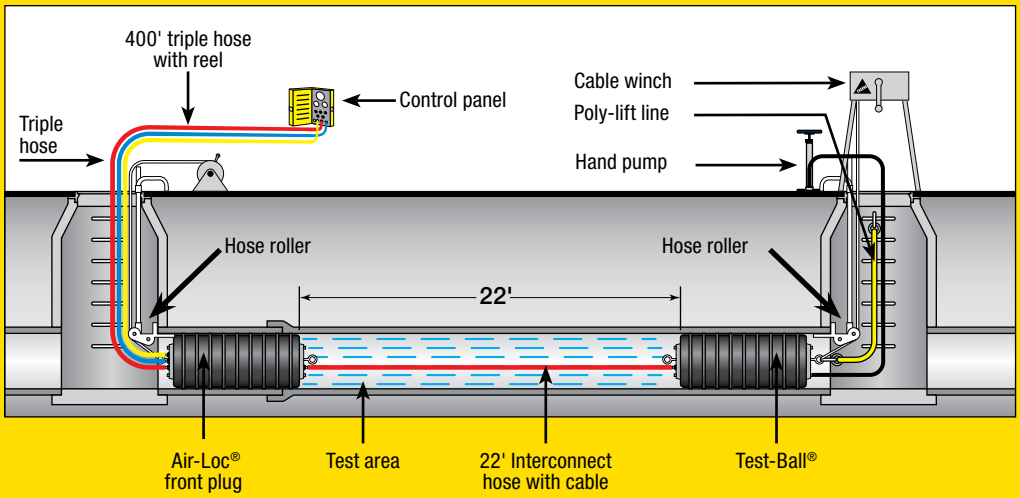

STAY OUT OF THE DANGER ZONE DURING THE TEST!!
ALWAYS BLOCK PLUGS WHEN CONDUCTING AIR TESTS.

AIR-LOC® MANHOLE TESTERS

Air-Loc® Manhole Testers provide the most efficient, accurate and cost-effective method of testing new, existing and rehabilitated manholes, per ASTM C 1244.

Vacuum testing identifies infiltration and exfiltration problems by creating a vacuum in a manhole and then monitoring a gauge for vacuum loss. Less expensive and faster than water testing, the Air-Loc® manhole tester's remote-inflation and monitoring system keeps users away from the "danger zone."

Bladder-Style Air-Loc® Head Assembly Features:

- Seals the inside diameter of the manhole at frame or cone
- Supported by a durable aluminum brace
- Push-pin rod design for easy depth adjustment
- Includes 20' hose with gauge

Plate-Style Air-Loc® Head Assembly Features:

- Designed to seal manhole cone surface
- Seals a wide range of manhole diameters
- Neoprene gasket for leak-free seal
- Includes 20' hose with gauge

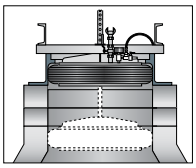

Seals on frame

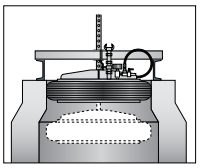

Seals at top of cone

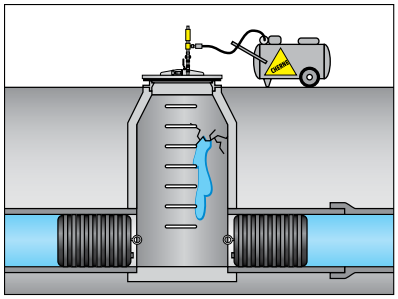

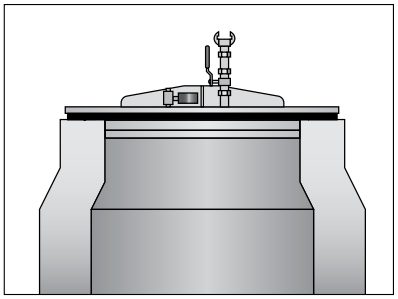

BLADDER STYLE MANHOLE TESTERS

PART NUMBER	DESCRIPTION
210248	24" Tester. Seals 20" – 24.3" openings
210268	26" Tester. Seals 21.5" – 26.3" openings
210298	29" Tester. Seals 24" – 29.3" openings
210308	30" Tester. Seals 25" – 30.3" openings
210328	32" Tester. Seals 27.5" – 32.8" openings
210348	34" Tester. Seals 30" – 34.3" openings
210368	36" Tester. Seals 31.5" – 36" openings
098485	24" Bladder, Replacement
008404	26" Bladder, Replacement
060678	29" Bladder, Replacement
099406	30" Bladder, Replacement
063339	32" Bladder, Replacement
063541	36" Bladder, Replacement
055348	20' Replacement Hose and Gauge Assembly
304058	0–30" Hg Vacuum Test Gauge, 3.5" Dial
251372	0–60 PSI Bladder Pressure Gauge, 2" Dial

PLATE STYLE MANHOLE TESTERS

PART NUMBER	DESCRIPTION
220328	32" Tester. Seals 18" – 30" openings
220388	38" Tester. Seals 18" – 36" openings
220448	44" Tester. Seals 18" – 42" openings
033018	32" Replacement Pad
033028	38" Replacement pad
023748	44" Replacement pad
055348	Replacement Hose and Gauge Assembly, 20 feet
304058	0–30" Hg Vacuum Test Gauge, 3.5" Dial

AIR-LOC® VACUUM EQUIPMENT

Air-Loc® Vacuum Pump Features:

- Choose a Honda or Briggs & Stratton engine–each with low-oil shut-off to prevent engine failure
- Heavy-duty frame with optional wheel kit
- Unbreakable aluminum filter jars
- Oil-free graphite vane pump for no-fuss lubrication
- Draws 10" Hg vacuum in about two minutes for a 15' deep manhole (18 CFM at 10" Hg)

Air-Loc® Vacuum Generator Features:

- Converts standard air compressor into a vacuum source for testing manholes–draws a vacuum in minutes
- Vacuum Generator 460 delivers 14 CFM at 10" Hg
  - Air compressor: minimum 7 CFM at 100 PSI
- Vacuum Generator 600 delivers 42 CFM at 10" Hg, meeting or exceeding the competition
  - Air compressor: minimum 85 CFM at 100 PSI
- Vacuum generators may also be used as a rapid deflator for large diameter plugs; significantly reduces the time to deflate large diameter plugs.

VACUUM PUMP

PART NUMBER	DESCRIPTION
278088	Vacuum Pump: Honda Engine
278168	Vacuum Pump: Briggs engine
045918	Optional Wheel Kit
019501	Replacement Pump
015823	Replacement Line Filter
019321	Replacement Pump Vanes (four required)
107379	Replacement Metal Jar, Line Filter
278098	Replacement Vacuum Pump Filter Assembly, Exhaust
278108	Replacement Vacuum Pump Filter Assembly, Intake

GENERATOR 460

Air-Loc® Vacuum Generator 460

PART NUMBER	DESCRIPTION
200468	Vacuum Generator 460
033868	Replacement Silencer for Vacuum Generator 460
035248	Replacement Filter for Generator 460

GENERATOR 600

Air-Loc® Hi-Flow Vacuum Generator 600

PART NUMBER	DESCRIPTION
200908	Vacuum Generator 600
054268	Replacement Silencer for Generator 600

AIR-LOC® STRINGER • VENTILATORS

Air-Loc® Fan Assembly Features:

- For use as a line stringer, ventilator and smoke blower
- Made of lightweight, cast aluminum
- Foam base minimizes vibration
- 30" Diameter base plate

Equipped with:

- Honda or Briggs & Stratton engine
- Top-mounted handles for easy maneuverability

Line Stringer Usage Details:

- Will string a 300' section of sewer line in under a minute without plugging the line
- Line stringer vacuum pulls a lightweight nylon parachute through wet or dry lines

Ventilator Usage Details:

- Supports OSHA guidelines for confined space entry
- Provides up to 3,470 CFM as a suction ventilator[1]
- Out-performs similar competitive models by 40% at 3" of static pressure

STRINGER • VENTILATOR

PART NUMBER	DESCRIPTION
303318	Line Stringer Kit: Honda engine 1000' nylon rope and reel, 6–10" parachute
301000	Line Stringer Kit: Briggs & Stratton engine 1000' nylon rope and reel, 6–10" parachute
013108	Fan Assembly: Honda engine
012100	Fan Assembly: Briggs & Stratton engine
014714	Replacement fan: Line Stringer/Ventilator (right pitch)
300608	1000' Nylon Rope and Reel
066303	4" Parachute
015403	6"–10" Parachute
050628	8"–12" Parachute
300594	10"–18" Parachute
006525	18"–36" Parachute

Suction Ventilator

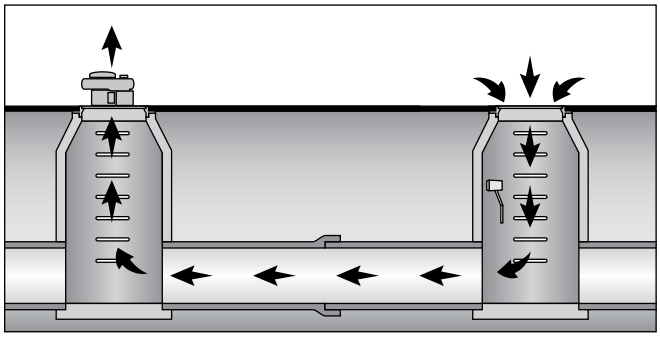

Line Stringer

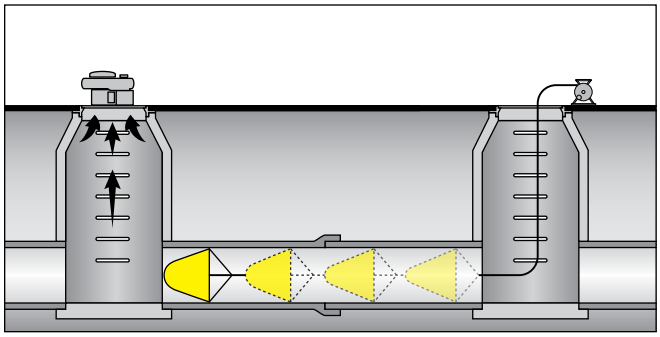

[1] - CFM performance based on independent laboratory tests. When tested side-by-side at an independent air flow laboratory, Cherne's line stringer, ventilator, and smoke blower beat the competition at every flow condition.

AIR-LOC® SMOKE TESTING

Smoke Blower Features:
- Effectively identifies inflow
- For use with traditional smoke bombs or liquid smoke
- Available with Briggs & Stratton engine
- Generates up to 3,769 cubic feet per minute of air flow[1]
- Made of lightweight, cast aluminum

Equipped with:
- ½" foam cell gasket to ensure a leak-free seal on manholes and minimize vibration
- Smoke candle box holder (traditional smoke blower only)
- Pressurized tank, hose and all necessary components (liquid smoke blower only)

Smoke Fluid Features:
- Produces thick, dense smoke
- Easy-to-regulate
- Virtually indefinite storage life
- Improved packaging for ease in pouring

Smoke Candle Features:
- Produces a thick, dense smoke
- Time-proven
- Simple to use
- Can be used with most smoke blowers
- 3 minute candles available with double wick that allows units to be strung together for a longer smoke time

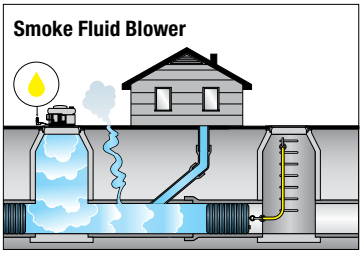

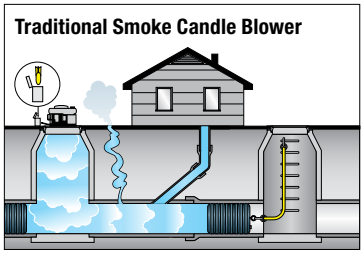

SMOKE CANDLE

PART NUMBER	DESCRIPTION
303550	Smoke Candle Smoke Blower Kit: Briggs & Stratton engine
072608	Smoke Candle: 30 seconds
072618	Smoke Candle: 60 seconds
072628	Smoke Candle: 3 minutes
072638	Smoke Candle: 3 minutes, double wick

SMOKE FLUID

PART NUMBER	DESCRIPTION
303008	Smoke Fluid Smoke blower Kit: Briggs & Stratton engine
036488	Fluid Smoke pressure container and hose: 2 gallons capacity
065808	Fluid Smoke: one gallon (1 per case)
065818	Fluid Smoke: five gallons (1 per case)
065828	Fluid Smoke: fifty-five gallon drum

ACCESSORIES

PART NUMBER	DESCRIPTION
014722	Smoke Blower replacement fan (left pitch)
058368	Smoke candle holding cage
036498	Fluid Smoke conversion kit from Smoke Candle Briggs & Stratton engine
036308	Fluid Smoke conversion kit from Smoke Candle Briggs & Stratton engine - Pre 2017

[1] - CFM performance based on independent laboratory tests. When tested side-by-side at an independent air flow laboratory, Cherne's line stringer, ventilator, and smoke blower beat the competition at every flow condition.

AIR-LOC® JOINT TESTERS

Fast, safe and easy to use, a five-second test determines joint integrity. Cherne's Air-Loc® Joint Tester is designed to test large diameter, installed, pre-cast concrete pipe as described in ASTM C1103.

Ready to test with water or air straight from Cherne's factory—no modifications are needed—the Air-Loc® Joint Tester also allows you to pre-test before backfilling. Capable of testing to 10 psi air or 50 psi water.

Features:

- Lightweight aluminum design allows for easy assembly in manholes
- Independent, adjustable wheels—easy to move
- Quick-connect control panel is simple to install and remove, plus the top-mounting feature won't interfere with laser usage
- Available with or without control panel and wheel kit
- Replacement end elements are available
- Recommended for testing pipe 21" and larger

JOINT TESTERS

Custom Sizes Available

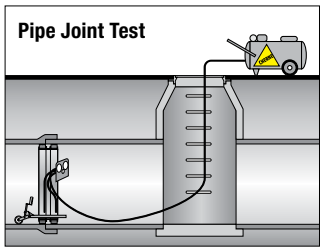

PART NUMBER	DESCRIPTION			
FULL JOINT TESTER	NOMINAL SIZE	PRODUCT DIAMETER	LESS WHEELS & CONTROL PANEL	REPLACEMENT END ELEMENT
009018	21"	19"	012018	098485
009028	24"	22"	012028	091456
009038	27"	25"	012038	091464
009048	30"	28"	012048	063339
009058	33"	31"	012058	063347
009068	36"	34"	012066	063355
009078	39"	37"	012078	070319
009088	42"	40"	012088	063363
009098	48"	46"	012098	063371
009108	54"	52"	012148	063398
009118	60"	58"	012118	063401
009128	66"	64"	012128	063428
009138	72"	70"	012138	063436
009158	78"	76"	012158	063444
009168	84"	82"	012168	063452
009178	90"	88"	012178	063460
009188	96"	94"	012188	063479
009198	102"	100"	012198	063487

ACCESSORIES/REPLACEMENT PARTS

PART NUMBER	DESCRIPTION
010048	Control Panel
026350	0–10 PSI 4" Retard Gauge for Air Test
087602	0–60 PSI 4" Gauge for Water Test
014838	0–100 PSI 2" Gauge For End Elements
007892	Three way valve
296643	Regulator
086363	21"–36" Wheel Assembly

PART NUMBER	DESCRIPTION
067008	39"-54" Wheel Assembly
093661 OA	60"-90" Wheel Assembly
024358	96" and up Wheel Assembly
010628	27"–54" Frame Gasket
010638	60"–120" Frame Gasket
013008	12' Panel to Joint Tester Hose

AQUA-LOC® HYDROSTATIC TEST PUMPS

Hydrostatic Test Pumps are designed for pressure testing water lines and sewer force mains as prescribed by AWWA Standard C600 Installation of Ductile-Iron Water Mains and C605 Installation of PVC Pressure Pipe.

Aqua-Loc® Hydrostatic Test Pumps are designed to be the most user friendly in the industry. Both Diaphragm and Piston Style pumps are available and come powered by either a Honda or Briggs & Stratton engine.

Aqua-Loc® Hydrostatic Test Pump

Diaphragm Style – Features:

- Honda or Briggs Engine with low oil shut off
- Hypro® Twin diaphragm pump - 9.5 gpm/550 PSI
- Handles up to 10% chlorine solutions
- May be run dry
- Test pressures can be set from 100–550 psi
- Integral manifolds – eliminates leak points
- Enclosed gear reduction – excellent heat dissipation
- Pulsation dampener – no need to surge tank

Equipped with:

- Heavy-duty frame
- Hydraulic quick-disconnect – brass, swivel fitting
- Inline strainer – easy to clean clear bowl
- Clear hose – flow verification
- Silicone filled test gauge with stainless steel case

AQUA-LOC HYDROSTATIC TEST PUMP - 9.5 GPM DIAPHRAGM STYLE

9.5 Gallon Diaphragm Pump
Shown with optional wheel kit

PART NUMBER	DESCRIPTION
278068	Diaphragm-style Test Pump: 9.5 gpm/550 psi Honda engine, 12' output & 10' intake hoses
278058	Diaphragm-style Test Pump: 9.5 gpm/550 psi Briggs & Stratton engine, 12' output & 10' intake hoses
039168	16 gallon optional water tank
045918	Optional Wheel Kit
031198	Replacement Output Hose without Quick Disconnects
022828	Quick Disconnect for Output Hose
064348	0–300 PSI Retard Gauge with 5 PSI Increments
030938	Replacement Bypass/Intake Hose
022768	Replacement Strainer

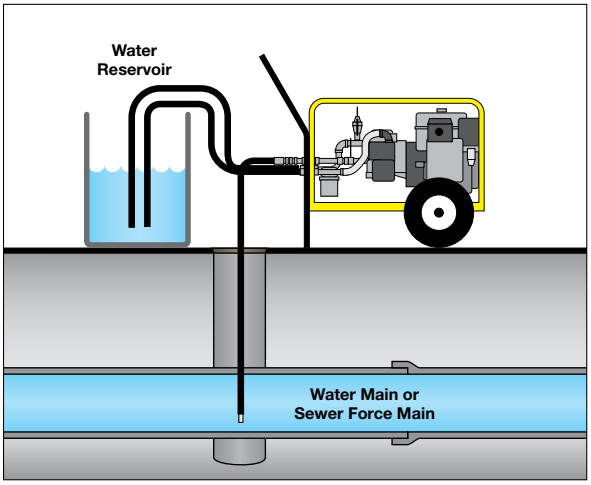

Suction Feed

Diaphragm Pump

Aqua-Loc® Hydrostatic Test Pump

Piston Style Features:

- Honda Engine with low oil shut off engine
- Self-priming Hypro® Big-Twin® Piston Pump for suction feed
- Piston Pump can also be pressure fed
- 10 gpm/450 PSI

Equipped with:

- Heavy-duty frame
- Heavy-duty coupling – with protective cover
- Pressure regulator – easy adjustment
- Clear hose – flow verification
- Inline strainer/filter – easy to clean, brass
- Thermal relief valve – guards against overheating
- Pulsation hose – reduces gauge fluctuation
- Hydraulic quick – disconnect-brass, swivel fitting
- Silicone filled test gauge with stainless steel case

AQUA-LOC HYDROSTATIC TEST PUMP - 10 GPM PISTON STYLE

Shown with optional wheel kit

PART NUMBER	DESCRIPTION
278138	Piston-style Test Pump: 10 gpm/450 psi Honda engine, 12' output hose
045918	Optional Wheel Kit
031198	Replacement 12' Output Hose
022828	Replacement Disconnect for Output Hose
064348	0 – 300 PSI Retard Gauge with 5 psi increments
030938	Replacement 12' Input Hose
022768	Replacement Brass Strainer

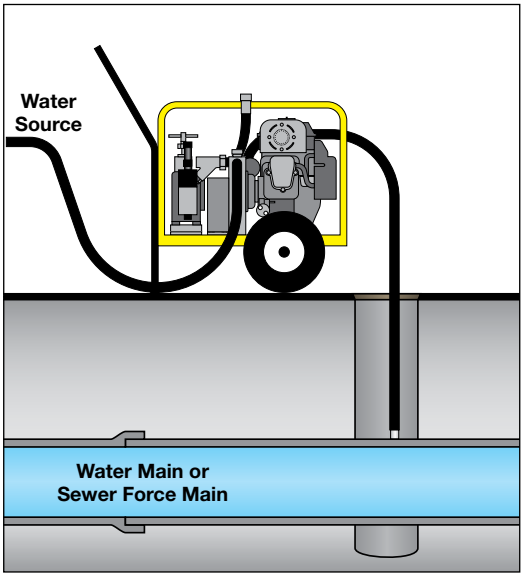

Piston Pump

Suction or Pressure Feed

AQUA-LOC® HYDROSTATIC TEST PUMPS CONTINUED

Aqua-Loc® Hydrostatic Test Pump High-Volume 35 GPM Diaphragm

Features:
- Honda engine with Oil alert® shut off system
- Hypro® triple diaphragm pump – 35 gpm/290 PSI
- Self priming, handles up to 10% chlorine solutions
- Enclosed gear reduction – excellent heat dissipation
- Heavy duty coupling with protective cover

Equipped with:
- Heavy-duty frame
- Pressure regulator – easy adjustment
- Silicone filled test gauge with stainless steel case
- Inline strainer – easy to clean clear bowl

Optional Water Tank:
- 16 gallon capacity polyethylene tank
- Allows pump to be pressure fed
- Hinged frame allows easy access to engine
- For use with 9.5 gallon diaphragm style pump

Optional Wheel Kit:
- For use with all models

AQUA-LOC HYDROSTATIC TEST PUMP - 35 GPM DIAPHRAGM STYLE

PART NUMBER	DESCRIPTION
278178	Diaphragm-style Test Pump: 35 gpm/290 psi Honda engine, 12' output & 10' intake hoses
045918	Optional Wheel Kit
047008	Replacement 12' Output Hose
052878	Replacement Disconnect for Output Hose
064348	0 – 300 PSI Retard Gauge with 5 psi increments
046988	Replacement 12' dual input hose
046758	Replacement Strainer Nylon Filter
063098	Replacement Washer - Output Hose

Shown with optional wheel kit and water tank

NO TURN
ON RED
CHERNE

TOOLS & ACCESSORIES

TOOLS & ACCESSORIES

61 TEST PUMPS • MANOMETER • CLOG-BUSTER
62 POINT REPAIR CARRIER
63 EXTENSION HOSES • TUB PLUGS
64 TEST GAUGES • CHAIN ASSEMBLIES
65 POLY-LIFT LINES
66 JET-BALL™

TEST PUMPS · MANOMETER · CLOG-BUSTER

A) Air-Max® Pro HV Test Pump (Part #273968)

- Larger barrel diameter - fewer strokes per inflation
- Contoured solid wood handle
- Forged steel construction for extra toughness
- 60 psi gauge with molded rubber cover
- Traditional metal thumb lock
- 3' hose with strain-relief
- Product Weight: 6.25 lbs (2.83 kg)

B) Air Max® Test Pump (Part # 273958)

- 100 psi gauge raised from base for protection
- Durable Steel Barrel
- Textured steel base prevents pump from slipping
- Durable, no-kink hose
- Product Weight: 3.6 lbs (1.36 kg)

C) Econ-O-Pump™ Test Pump (Part #273888)

- Traditional thumb lock
- 140 PSI high-pressure gauge with protective cover
- All steel construction with cast iron base
- Product Weight: 1 lb (.45 kg)

Manometer (Part #010205)

- Used for testing gas lines and DWV pipe
- Measures water columns from 0" to 16"
- Reads in increments of 1/10"
- Product Weight: .5 lb (.23 kg)

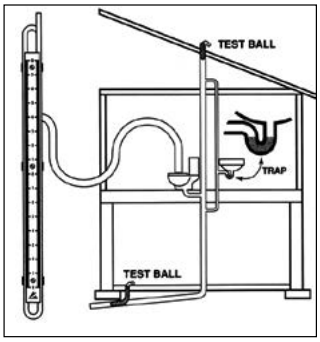

CLOG-BUSTER DRAIN FLUSHER

PART NUMBER	PRODUCT DESCRIPTION
303127	1" – 2" Clog-Buster drain flusher
303135	1.5" – 3" Clog-Buster drain flusher
303143	4" – 6" Clog-Buster drain flusher
006193	Faucet adapter

Clog-Buster Drain Flusher Features:

- Unclogs drain pipes in seconds
- Simply remove aerator from faucet and attach faucet adapter
- Attaches to standard garden hose fitting
- Insert clog buster as far as possible into drain and slowly turn on the cold water - clog should dislodge almost immediately
- Eliminates need for using chemicals

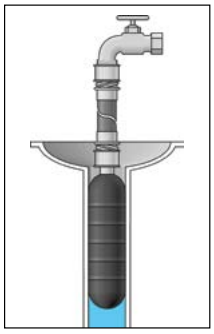

POINT REPAIR CARRIER

Cherne's point repair carriers are well-suited for most point repair systems. Available for multi-size line covers pipe sizes from 4"–36" diameters and lengths up to 15'. Cherne's carriers are known for both their durability and reliability. Custom lengths are available upon request.

Features:

- Maximum pipe contact guides and center line ensure proper placement of repair medium to minimize waste and increase productivity
- 1/4" NPT Inflation Port with male quick disconnect for ease of connection
- Durable, flexible natural corded rubber
- Bypass design allows sewage bypass during repair – no need to shut down the line
- The flexible design allows all units to be folded in half for transport
- Redesigned integrated caster wheel assembly and bypass channel have been optimized for ease of movement and enhanced bypass of effluent
- Reduced deflated diameters

POINT REPAIR CARRIERS

PART NUMBER	FOR PIPE SIZE / DIAMETER	LENGTH	INFLATION PRESSURE	BYPASS DIAMETER	WEIGHT (LBS.)	DEFLATED DIAMETER			CONTACT LENGTH	
						PLUG DIAMETER	INSIDE WHEEL	OUTSIDE WHEEL	MAXIMUM	MINIMUM
279058	4"-6" (100-150 mm)	5' (1.5 m)	45 psi	NA	10	2.65"	NA	NA	53"	47"
279108	4"-6" (100-150 mm)	10' (3 m)	45 psi	NA	13.5	2.65"	NA	NA	113"	107"
279158	4"-6" (100-150 mm)	15' (4.5 m)	45 psi	NA	17.5	2.65"	NA	NA	173"	167"
287058	8"-12" (200-300 mm)	5' (1.5 m)	25 psi	2"	22	4.75"	5.14"	5.6"	48"	42"
287108	8"-12" (200-300 mm)	10' (3 m)	25 psi	2"	30	4.75"	5.14"	5.6"	108"	102"
287158	12"-16" (300-400 mm)	15' (4.5 m)	25 psi	2"	37.5	4.75"	5.14"	5.6"	168"	162"
288058	12"-16" (300-400 mm)	5' (1.5 m)	15 psi	2"	25	8.56"	10"	11.9"	50"	45"
288108	12"-16" (300-400 mm)	10' (3 m)	15 psi	2"	35	8.56"	10"	11.9"	110"	105"
288158	12"-16" (300-400 mm)	15' (4.5 m)	15 psi	2"	45	8.56"	10"	11.9"	170"	165"
289058	18"-24" (450-600 mm)	5' (1.5 m)	15 psi	2"	74	14.68"	15.42"	17.9"	49"	43"
289108	18"-24" (450-600 mm)	10' (3 m)	15 psi	2"	84	14.68"	15.42"	17.9"	109"	103"
289158	18"-24" (450-600 mm)	15' (4.5 m)	15 psi	2"	94	14.68"	15.42"	17.9"	169"	163"
284058	24"-36" (600-914 mm)	5' (1.5 m)	15 psi	4"	107	19.05"	19.56"	22.3"	48"	33"
284108	24"-36" (600-914 mm)	10' (3 m)	15 psi	4"	140.5	19.05"	19.56"	22.3"	108"	93"
284158	24"-36" (600-914 mm)	15'	15 psi	4"	182	19.05"	19.56"	22.3"	168"	153"

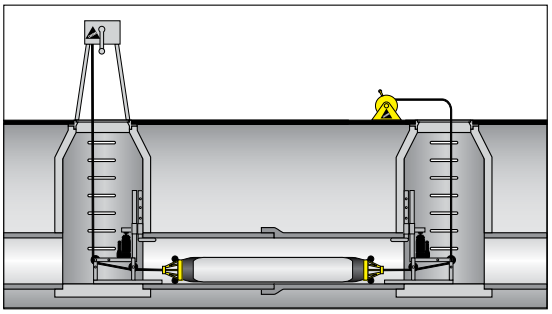

Point Repair Carrier

EXTENSION HOSES · TUB PLUGS

Tub Waste & Overflow Plugs: (Part #012678)

- Isolate bath waste for air/water testing
- Yellow ABS plastic
- Natural rubber gasket
- Threads into drain spuds with center hole and center hole overflow elbows
- Can only be used in overflow drains with 1/2" and 3/8" center hole diameters

Extension/Inflation/Read Back Hoses with Gauge

- Well suited for plugs up to 15"
- 0–100 PSIG gauge
- 3/16" ID hose

Extension/Inflation Hoses

- Well suited for plugs up to 15"
- 3/16" ID hose

EXTENSION/INFLATION/READ BACK HOSES WITH GAUGE

PART NUMBER	DESCRIPTION
274218	5' Extension hose with gauge
274228	10' Extension hose with gauge
274238	20' Extension hose with gauge
274248	30' extension hose with gauge
274268	50' extension hose with gauge
274298	100' extension hose with gauge

EXTENSION/INFLATION HOSES

PART NUMBER	DESCRIPTION
274011	2' Extension hose
274038	3' Extension hose
274054	5' Extension hose
274100	10' Extension hose
274208	20' Extension hose
055816	Deflator with clamp (female replacement end)
055808	Inflator with clamp (male replacement end)
277048	Replacement O-rings, 10 Pack

TEST GAUGES · CHAIN ASSEMBLIES

Test Gauges (without Test Body):
- 2" metal face
- High-quality brass 1/4" connection

Test Gauges (with Hexagonal Test Body):
- 2" metal face
- Chrome plated body
- 1/8" Schrader valve
- 3/4" NPT(F) pipe connection

Replacement Ring & Chain Assembly:
- Prevents Test-Ball® plugs from falling down a line
- Includes safety tag

TEST GAUGES WITHOUT TEST BODY

PART NUMBER	DESCRIPTION	
000698	0–15 PSI pressure range	.1 PSI increments
000628	0–30 PSI pressure range	.5 PSI increments
000638	0–60 PSI pressure range	1 PSI increments
000648	0–100 PSI pressure range	2 PSI increments

TEST GAUGES WITH TEST BODY

PART NUMBER	DESCRIPTION	
024568	0–15 PSI pressure range	.1 PSI increments
019698	0–30 PSI pressure range	.5 PSI increments
019708	0–60 PSI pressure range	1 PSI increments
019718	0–100 PSI pressure range	2 PSI increments

REPLACEMENT RING & CHAIN ASSEMBLIES

PART NUMBER	PRODUCT DESCRIPTION
059708	2" Ring with 12" chain
059718	3" Ring with 12" chain
059728	4" Ring with 12" chain
059748	6" Ring with 12" chain
059758	2" Ring with 24" chain
059768	3" Ring with 24" chain
059778	4" Ring with 24" chain
059798	6" Ring with 24" chain

POLY-LIFT LINES

Hi-Flow Poly Lift Line:

- *Greater Lifting Strength*
- Recommended for plugs 6" to 48"
- Retard gauge: helps prevent "peg-out" damage
- Heavy-duty rubber gauge cover protects gauge
- 3⁄8" heavy-duty ID hose for quick inflate/deflate
- Quick-dump valve for easy deflation
- Industrial Quick Disconnect
- Designed for use with plugs with removable inflator valve

Super-Flow Hose with Gauge:

- Designed for large diameter multi-size plugs - (24"–48" to 54"–96")
- 3/4" Heavy-duty hose for both durability and faster deflation
- Retard gauge: Helps prevent gauge "peg-out"
- Heavy-duty rubber gauge cover protects gauge
- Utilizes traditional "crow's foot" air compressor fittings
- Quick dump valve for easy deflation

Poly-Lift Line:

- Great for plugs up to 15"
- 3/16" ID hose
- Threaded connection fittings

HI-FLOW HOSE

PART NUMBER	LENGTH
383108	Hi-Flow Hose, 10 FT W/Gauge
383208	Hi-Flow Hose, 20 FT W/Gauge
383308	Hi-Flow Hose, 30 FT W/Gauge
383408	Hi-Flow Hose, 40 FT W/Gauge
383508	Hi-Flow Hose, 50' with gauge
380108	Hi-Flow Hose, 10' without gauge
380208	Hi-Flow Hose, 20' without gauge
380308	Hi-Flow Hose, 30' without gauge
380408	Hi-Flow Hose, 40' without gauge
380508	Hi-Flow Hose, 50' without gauge

Consult factory for lines without gauges.

SUPER-FLOW HOSE WITH GAUGE

PART NUMBER	DESCRIPTION
341208	Super-Flow Hose, 20 FT W/Gauge
341308	Super-Flow Hose, 30 FT W/Gauge
341408	Super-Flow Hose, 40 FT W/Gauge

POLY-LIFT LINE

PART NUMBER	PRODUCT LENGTH
261076	10'
261084	20'
261106	30'
261114	40'

JET-BALL™

Jet-Ball Pipeline Cleaning Ball Features:

- Inexpensive method for cleaning new lines prior to line acceptance testing
- Also for cleaning grease out of existing lines– the better alternative to an expensive jet truck
- Made of natural rubber

Equipped with:

- Eye bolts at each end for tethering
- Spiral grooves turn Jet Ball for superior pipe cleaning

See Winches and Rollers on page 49

JET-BALL

PART NUMBER	NOMINAL SIZE	USAGE RANGE		HEAD PRESSURE (FEET OF HEAD)	PRODUCT WEIGHT	DEFLATED LENGTH	DEFLATED DIAMETER	INFLATION VALVE THREAD SIZE	EYE BOLT
254207	6" - 10" (150 - 250 mm)	5.87" (149 mm)	10.25" (260 mm)	5 (1.5 M)	2.5 lbs (1.1 kg)	8" (203 mm)	5.62" (142 mm)	1/4" (1)	3/8" (2)
254215	10" - 14" (250 - 350 mm)	8.75" (222 mm)	14.25" (362 mm)	5 (1.5 M)	7.5 lbs (3.4 kg)	12.25" (311 mm)	8.5" (216 mm)	1/4" (1)	3/8" (2)
254223	15" - 18" (375 - 450 mm)	11" (279 mm)	18.25" (464 mm)	5 (1.5 M)	13 lbs (5.9 kg)	14.75" (375 mm)	10.75" (273 mm)	1/4" (1)	3/8" (2)

Jet-Ball™ Application

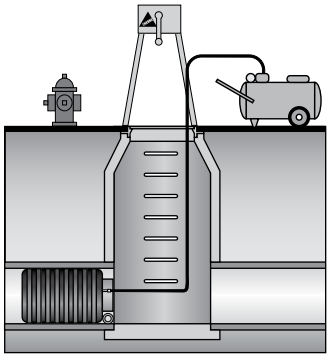

1) Install plug to isolateb manhole

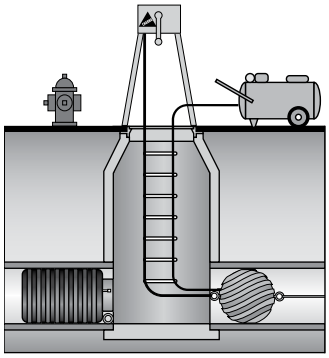

2) Attach Jet-Ball™ to tag line and inflate

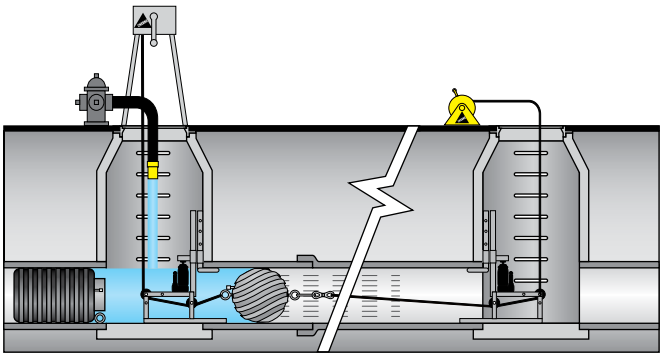

3) Introduce water into manhole and slowly release Jet-Ball™ down the line.

TECHNICAL DATA

TECHNICAL DATA

69 CONVERSION CHARTS • TESTING METHODS

CONVERSION CHARTS · TESTING METHODS

Water Test:
The DWV plumbing system is plugged leaving the top vent open. Water is then introduced to the system, purging any trapped air that may occur. The test passes if no water column is lost or no pressure drop is noted on a gauge.

Air Test:
The DWV plumbing system is plugged at all openings including traps and vents, leaving one opening as a point to both introduce and monitor the test pressure. Air is introduced, pressurizing the system (normally 5 PSI or less), making sure all are outside the danger zone. (See safety and usage instructions.) The test passes if the measurable loss of pressure is within the time and pressure allowances of the test specifications.

Manometer (or U-Tube):
Also known as a final test, the manometer test verifies trap tightness in a new plumbing system. All traps are filled with water and all vents are then plugged. The manometer tube is first filled with water so that it "zeroes" out. Then the lower tube of the manometer is placed through a trap. A second hose is then put through the same trap and a small amount of pressure is applied. A decrease in water column measured on the manometer scale indicates that there is a leak in the system.

Scent Test:
The DWV system is plugged at all openings except one. Liquid scent is applied in that opening, which is then plugged. Leaks are detected via smell.

Calculating Head Pressure/Feet of Head

1) Measure the distance of the pipe and multiply it by the slope of the grade.
2) Measure the distance of the pipe above the plug. (Used when pipe is vertical)

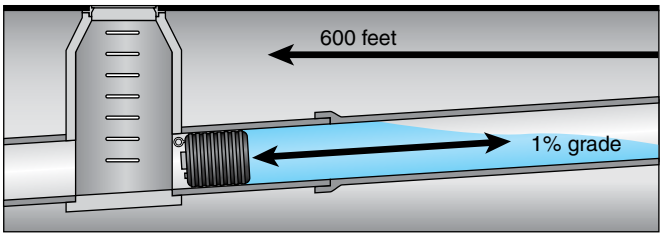

In the example above, the answer is 600 x .01 = 6 feet of head.

3) Attach a hose to a Muni-Ball® bypass. Raise the hose until the flow stops. Measure the height of the water in the hose.

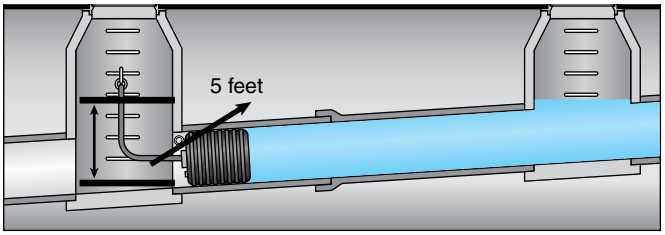

In the example above, the answer is 5 feet of head

MEASURES CONVERSION CHART

UNIT	=	CONVERSION FACTOR	X	UNIT
Pounds per square inch	=	14.5	x	Bars
Gallons	=	7.48052	x	Cubic feet
Meters	=	.3048	x	Feet
Inches of mercury	=	.8825	x	Feet of water
Pounds per square inch	=	.4335	x	Feet of water
Millimeters	=	25.4	x	Inches
Feet of water	=	1.133	x	Inches of mercury
Pounds per square inch	=	.4912	x	Inches of mercury
Pounds	=	2.2046	x	Kilograms
Feet	=	3.281	x	Meters
Inches	=	.03937	x	Millimeters
Feet of water	=	2.307	x	Pounds per square inch (PSI)
Inches of mercury	=	2.036	x	Pounds per square inch (PSI)

PRESSURE CONVERSION CHART

PSI	FEET OF HEAD	PSI	FEET OF HEAD
1	2.31	14	32.33
2	4.62	15	34.64
3	6.93	16	36.94
4	9.24	17	39.25
5	11.55	18	41.56
6	13.85	19	43.87
7	16.16	20	46.18
8	18.47	25	57.73
9	20.78	30	69.27
10	23.09	35	80.82
11	25.40	40	92.36
12	27.71	45	103.91
13	30.02	50	115.45

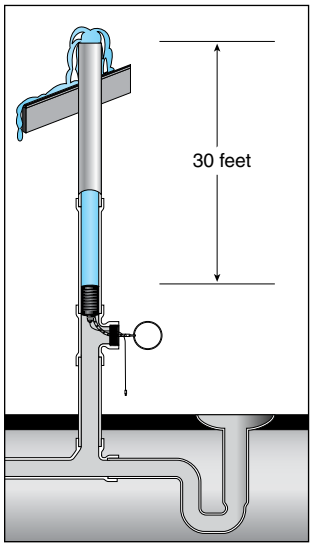

In the example above, the answer is: 30 feet of pipe above the plug = 30 feet of head

ALWAYS BLOCK PLUGS WHEN CONDUCTING AIR TESTS.

TEST WITH THE BEST

From Humble Beginnings to an Industry Standard

In 1953, Cherne® Industries created an innovative inflatable device for stack testing. Cherne's pneumatic product offering expanded to include testing, maintenance and repair equipment for residential, commercial, industrial and municipal systems.

Acquired by Oatey® Company in 1990, Cherne Industries maintained its focus on system testing, maintenance and repair. As a part of the Oatey Family of Brands, Cherne Industries earned ISO certification in 1998, confirming both Oatey's and Cherne's commitment to consistency and quality.

Available in Oatey Company distribution centers throughout North America and through partner distribution on every continent, Cherne products are relied on by residential and commercial contractors and industrial and municipal engineers worldwide. Product lines are available in both domestic and international specifications.

While Cherne Industries has grown, its focus remains constant – providing customers the most reliable and innovative testing, maintenance and repair equipment in the plumbing, waterworks and underground industries – good enough to bear the Cherne name.

An ISO 9001-Certified Company

Oatey®

deliver quality. build trust. improve lives.

POWER OF ONE

#1 in the industry. Oatey® is the number one source for purchasing the leading brands in the plumbing industry.

One call does it all. Only Oatey brings you the plumbing industry's best brands in one source. Making it easy to purchase any product across all our brands on one invoice, in one shipment.

TO PLACE AN ORDER
Contact your local Oatey Representative
800-321-9532
Oatey.com

LCS1109C 04/19