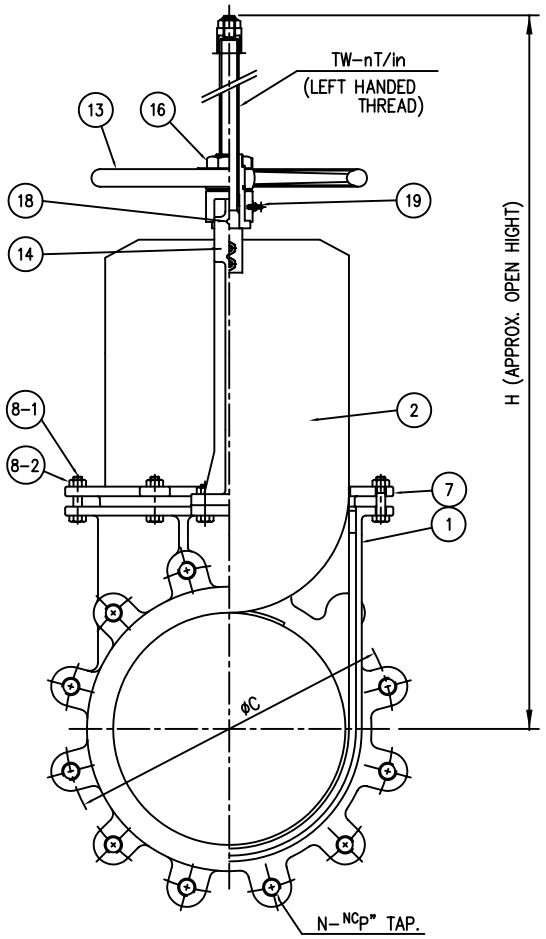

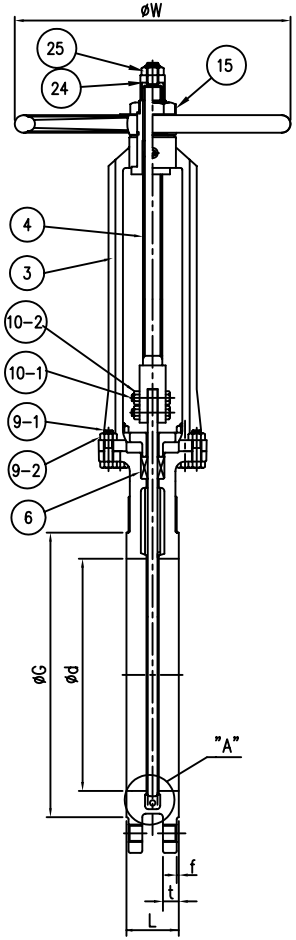

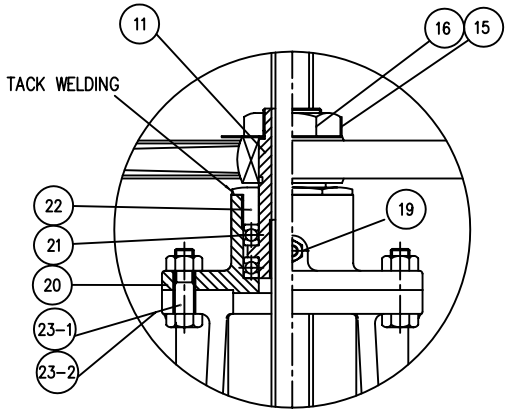

FOR SIZES 14" AND LARGER

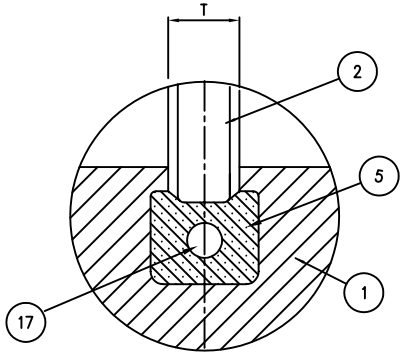

DETAIL "A"

NO.	PART NAME	MATERIAL	Q'TY	REMARK
1	BODY	A351 – CF8M	1	
2	DISC	A240 – 316	1	
3	YOKE	A351–CF8	1	
4	STEM	A276–304	1	
5	RUBBER SEAT	NBR		
6	PACKING	NONASBESTOS	1SET	
7	PACKING GLAND	A351 – CF8	1	
8–1	GLAND BOLT	A193–B8		
8–2	GLAND NUT	A194–8		NYLON LOCK NUT
9–1	YOKE BOLT	A193–B8	4	
9–2	YOKE NUT	A194–8	4	
10–1	DISC BOLT	A193–B8	2	
10–2	DISC NUT	A194–8	2	NYLON LOCK NUT
11	YOKE SLEEVE	BRASS	1	
12	THRUST WASHER	BRASS	1	
13	HAND WHEEL	A197	1	
14	NAME PLATE	ALUMINIUM	1	
15	LOCK WASHER	A240–304	1	
16	WHEEL NUT	BRASS & STEEL	1	
17	SEAT WIRE	A276–304		INTEGRAL
18	RIVET	ALUMINIUM	2	
19	GREASE NIPPLE	ASS'Y	1	
20	BEARING HOUSING	A351–CF8	1	
21	THRUST BALL BEARING	ASS'Y	2	
22	BEARING GLAND	A351–CF8	1	TACK WELDING
23–1	BEARING HOUSING BOLT	A193–B8	4	
23–2	BEARING HOUSING NUT	A194–8	4	
24	LOCK CAP	A276–304	1	
25	LOCK CAP NUT	A194–8	1	NYLON LOCK NUT

NOTES

1. BASIC DESIGN, TEST & INSPECTION : MSS SP–81.
2. FACE TO FACE DIMENSIONS : MSS SP–81
   <BUT, SIZES 2 "2 5", 22", 26", 28", 30" & 32": MAKER STD.>.
3. FLANGE DIMENSIONS : ANSI B16.5
   <BUT, SIZES 22", 26" & LARGER: MSS SP–44>.
4. OTHER DIMENSIONS : MAKER STANDARD.

UNIT : INCHES

SIZE	L	ød	øG	øC	N –NCP	t	f	TW(mm)–n T/in	T	øW	H	WT (Lbs)
3	2.00	2.91	5.00	6.00	4 – 5/8	0.59	0.08	18–6	0.32	7.09	18.58	24
4	2.00	3.94	6.18	7.50	8 – 5/8	0.59	0.08	20–6	0.32	9.84	20.67	33
6	2.25	5.83	8.50	9.50	8 – 3/4	0.67	0.08	20–6	0.32	9.84	27.80	58
8	2.75	7.87	10.63	11.75	8 – 3/4	0.71	0.08	22–5	0.32	11.81	34.13	89
10	2.75	9.84	12.76	14.25	12 – 7/8	0.91	0.10	26–5	0.39	13.78	42.28	126
12	3.00	11.89	15.00	17.00	12 – 7/8	0.91	0.10	28–5	0.39	15.75	48.98	217
14	3.00	13.39	16.26	18.75	12 – 1	0.94	0.10	28–5	0.55	15.75	53.15	243
16	3.50	15.51	18.50	21.25	16 – 1	1.06	0.10	30–4	0.55	19.69	60.24	353
18	3.50	17.32	20.98	22.75	16 – 1–1/8	1.10	0.10	30–4	0.55	19.69	67.32	386
20	4.50	19.29	22.99	25.00	20 – 1–1/8	1.18	0.10	35–4	0.71	21.65	75.20	541
24	4.50	23.23	27.24	29.50	20 – 1–1/4	1.18	0.10	35–4	0.71	21.65	103.15	680
30	4.75	29.13	33.74	36.00	28 – 1–1/4	1.26	0.12	45–3	0.71	23.62	104.57	1250

FNW™
4120 NE Columbia Blvd
Portland, OR 97211
Phone (503) 287-8383
Fax (503) 281-9677

TITLE/DESCRIPTION: 68B-150# RESILIENT SEAT, STAINLESS STEEL BODY, ANSI 150# 3-30", LUG'D(RF)

DATE: 10-21-1998	BY:	UNITS: INCHES
SCALE: NONE	APP'D:	PAGE(S): 1
MODEL: 68B		
DWG NO:		
NOTES:		
FILE: 68B_3-30.dwg	WT:	LOC: PORTLAND
PAGE SIZE: A3	REV: 0	R'DATE:

THIS DRAWING CONTAINS CONFIDENTIAL AND PROPIETARY INFORMATION OF FNW VALVE AND IS SUBMITTED TO YOU FOR THE LIMITED PURPOSE OF PROVIDING YOU INFORMATION ON PRODUCTS AND SYSTEMS PURCHASED FROM FNW VALVE. BY RECEIVING THIS DOCUMENT, YOU AGREE NOT TO DISCLOSE SUCH INFORMATION TO OTHERS EXCEPT BY WRITTEN PERMISSION OF FNW VALVE.

A4<297x210mm>