hansgrohe

**Joleena**
**Semi-Pro Kitchen Faucet, 2-Spray, 1.75 GPM**
Finishes : **steel optic** Part no. : **04792800**

## Description

**Features**

- Swivel range 360°
- Full and needle spray
- Toggle spray diverter with pause feature (allows temporary stop of water stream)
- MagFit magnetic sprayhead docking
- Single-hole installation
- Flow: 1.75 GPM (6.6 L/Min)
- Ceramic cartridge
- ⅜" hoses
- Integrated double backflow prevention
- MASS/Massachusetts
- NSF61/IAPMO/N3016-(No NSF Logo!)
- DOE/FTC
- NSF372(LL)/Iapmo/6738-(No NSF Logo!)
- TECQ/Texas Registered
- ADA/IAPMO/3016
- CEC/California/Watersaving

## Technology

Quick Clean

## Compliance

ADA

UPC C ®

## Product image
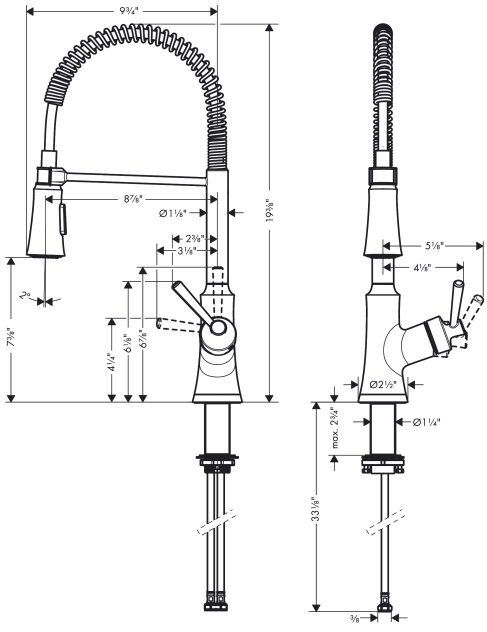
## Scale drawing