hansgrohe

Joleena
4-Hole Roman Tub Set Trim with 1.75 GPM Handshower
Finishes : **matte black** Part no. : **04777670**

Description

Features

- Flow: 5.55 GPM (21 L/Min)
- 90° ceramic valves
- Integrated double backflow prevention
- MASS/Massachusetts
- DOE/FTC
- TECQ/Texas Registered
- CEC/California/Watersaving
- WaterSense/IAPMO/7286/Showers

Compliance

Product image
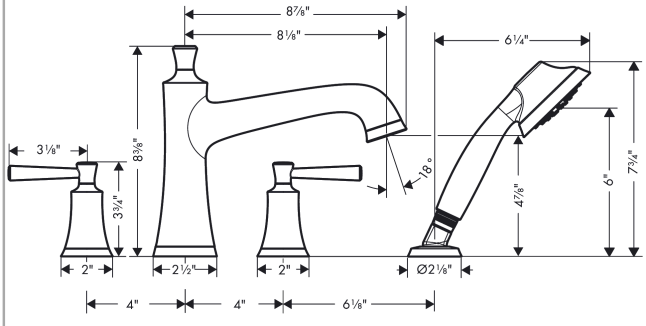
Scale drawing