48" CLASSIC SIDE-BY-SIDE REFRIGERATOR/FREEZER WITH INTERNAL DISPENSER

BI-48SID/S

FEATURES

- Monitor and control remotely with Wi-Fi connectivity
- Preserves refrigerated foods with cool, moist air and frozen foods with frigid, dry air
- Fight spoilage and odors with a NASA-inspired air purification system
- Locks in cold air to ensure freshness with magnetic door seals
- Keeps produce fresher with high-humidity, sealed crisper and deli drawers
- Controls temperature within one degree of setpoint
- Filters water and ice, removing contaminants, chlorine taste, and odor
- Delivers fresh, filtered water through an internal dispenser designed to discreetly rest within the refrigerator
- Yields ice automatically and "max ice" for additional production
- Ensures excellent visibility with bright lights
- Refer to freshness cards for tips on food preservation, use, and care

ACCESSORIES

- 48" Stainless Steel Kickplate
- 90° Door Stop
- Air Purification Cartridge
- Egg Container
- Stainless Steel Pro Louvered Grille - 84"
- Stainless Steel Pro Louvered Grille - 84"
- Stainless Steel Pro Louvered Grille - 88"
- Stainless Steel Side Panel
- Water Filter
- White Side Panel

Accessories are available through an authorized dealer.
For local dealer information, visit subzero-wolf.com/locator.

HANDLE OPTIONS

PRO

TUBULAR

PRODUCT DETAILS

REFRIGERATOR

- 1 adjustable dairy compartment
- 1 high-humidity crisper drawer with adjustable dividers
- 2 refrigerator storage drawers with adjustable dividers
- 5 refrigerator door bins (3 adjustable; 2 stationary)
- 5 glass refrigerator shelves (4 adjustable; 1 stationary)
- Internal water dispenser
- LED refrigerator and freezer lights

FREEZER

- 3 freezer storage drawers
- 4 wire freezer shelves (3 adjustable; 1 stationary)

Specifications are subject to change without notice. This information was generated on March 2, 2020. Verify specifications prior to finalizing your cabinetry/enclosures.

48" CLASSIC SIDE-BY-SIDE REFRIGERATOR/FREEZER WITH INTERNAL DISPENSER

PRODUCT SPECIFICATIONS

Model	BI-48SID/S
Dimensions	48"W x 84"H x 24"D
Door Clearance	30"
Weight	656 lbs
Refrigerator Capacity	18.6 cu. ft.
Freezer Capacity	9.6 cu. ft.
Electrical Supply	115 VAC, 60 Hz
Electrical Service	15 amp dedicated circuit
Receptacle	3-prong grounding-type

ELECTRICAL

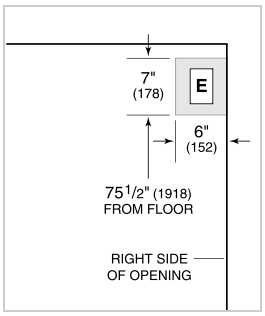

PLUMBING

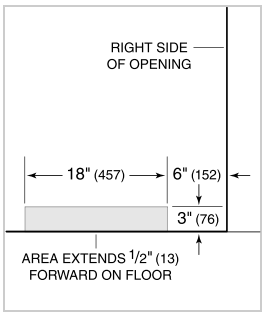

NOTE: Dimensions in parenthesis are in millimeters unless otherwise specified

INTERIOR VIEW

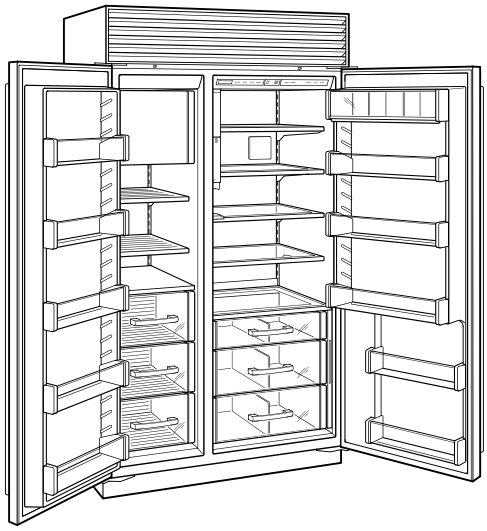

This illustration is intended for interior reference only and may not represent the exterior of the model being specified.

DIMENSIONS

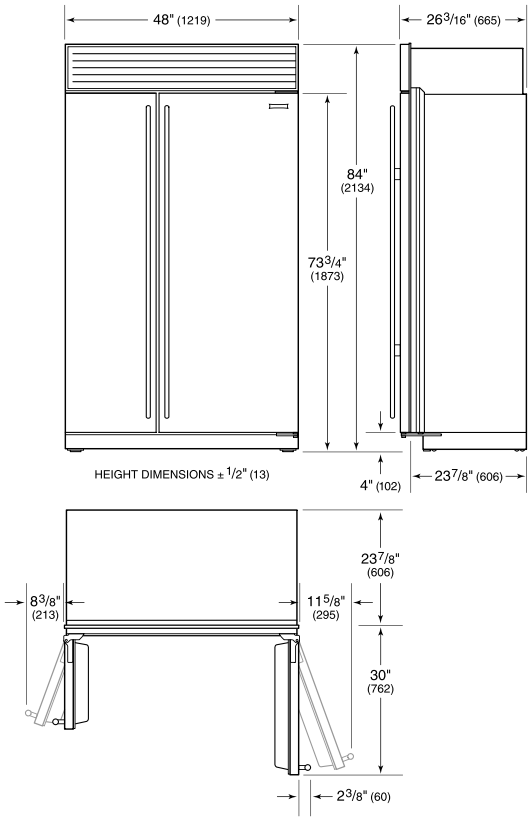

STANDARD INSTALLATION

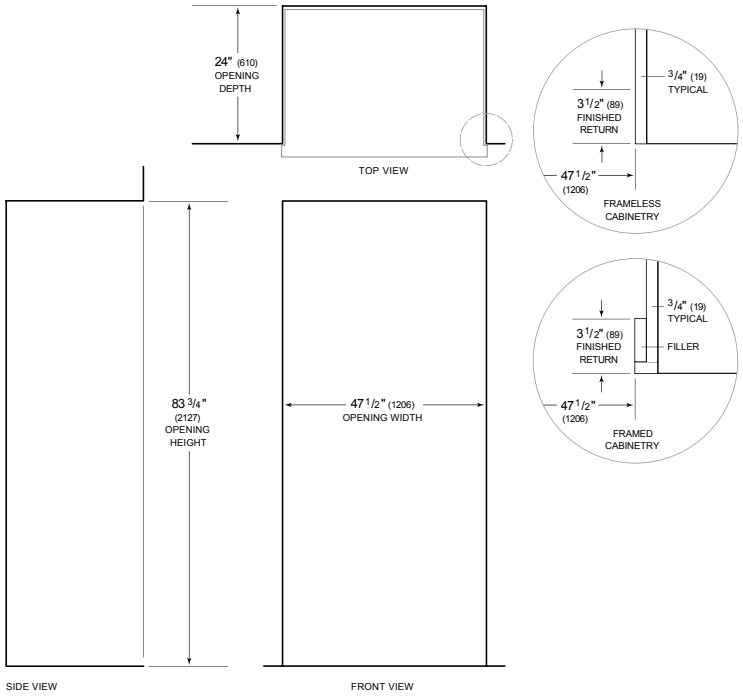

NOTE: 3 1/2" (89) finished returns will be visible and should be finished to match cabinetry
Shaded line represents profile of unit.