VICTORIAN

CENTERSET BATHROOM FAUCET

SKU: 929484

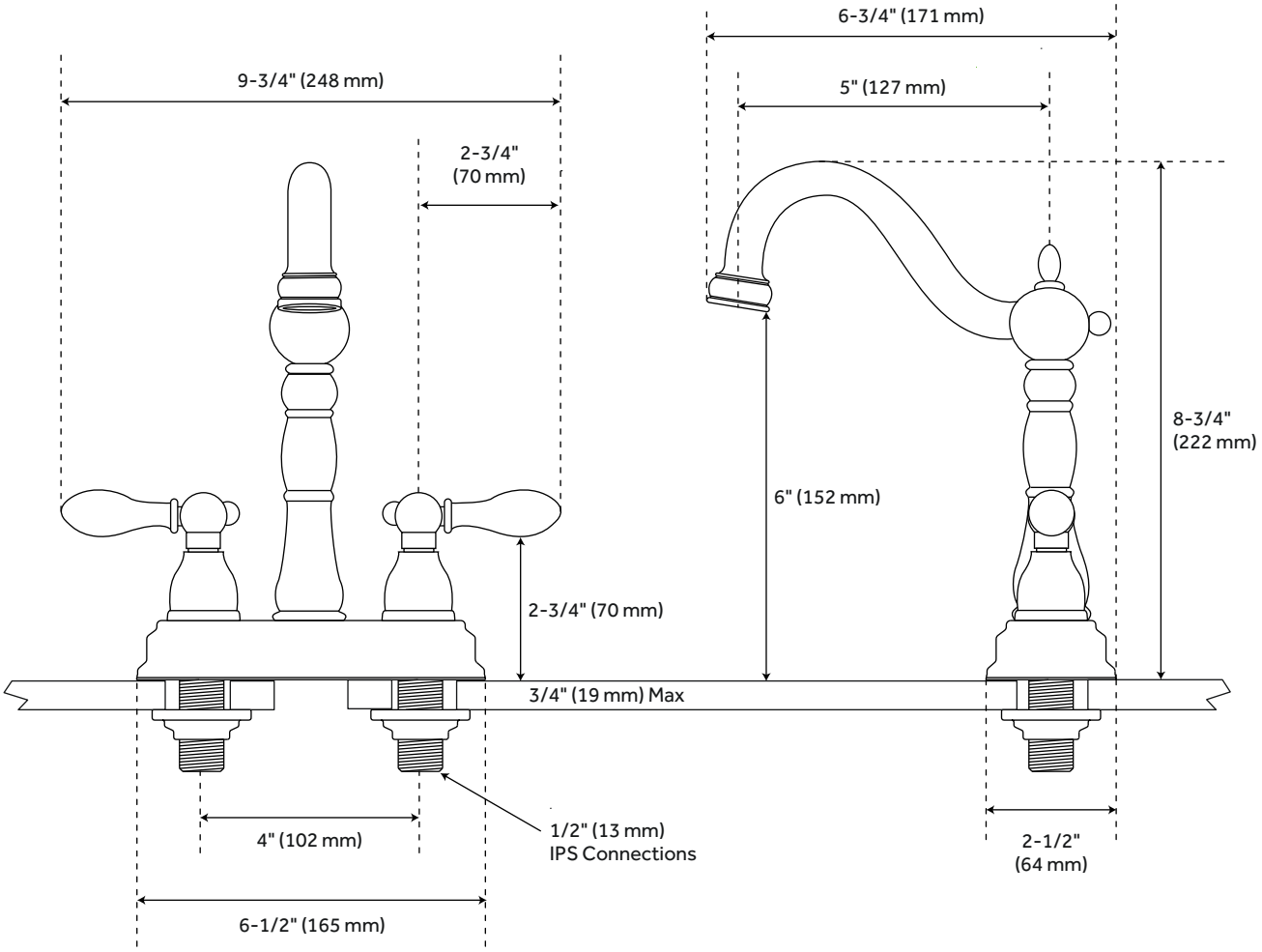

FEATURES

Max. Countertop Thickness: 3/4"
Faucet Centers: 4"
Handle Type: Lever
Length: 9-3/4"
Width: 6-3/4"
Height: 8-3/4"
Height To Spout: 6"
Spout Reach: 5"
Swivel Spout: Yes
Base Plate Length: 6-1/2"
Base Plate Width: 2-1/2"
Handle Length: 2-3/4"
Height to Bottom of Handle: 2-3/4"
Ceramic Disc Cartridges: Yes
Hot and Cold Indicators: No
IPS: 1/2"
Drain Included: Yes
Overflow Hole: Yes
Drain Size: 1-1/2"

SIGNATURE HARDWARE LIFETIME WARRANTY

See website for warranty information

All dimensions and specifications are nominal and may vary. Use actual products for accuracy in critical situations.

REVISED 02/21/2020