Fernco Inc.
300 S. DAYTON ST.
DAVISON, MI 48423
PH: 810-653-9626
FAX:810-654-2616

1051-1818RC

DESCRIPTION:

18" AC/DI x 18" AC/DI

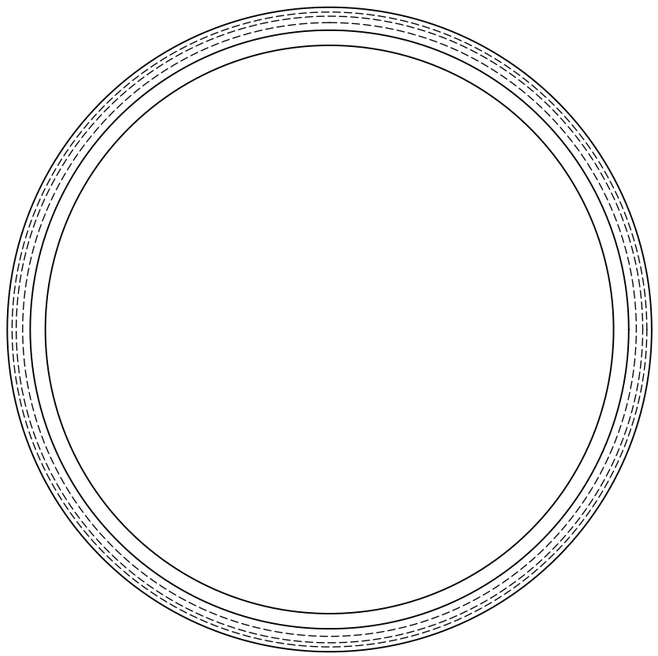

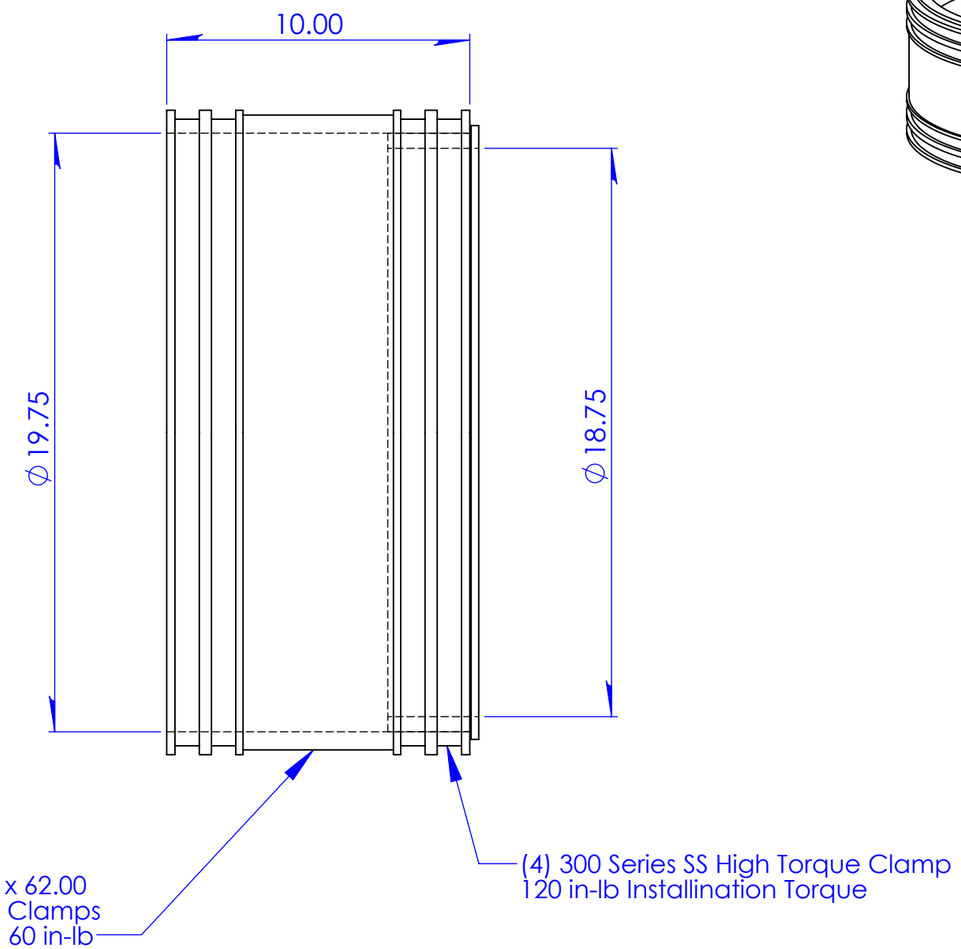

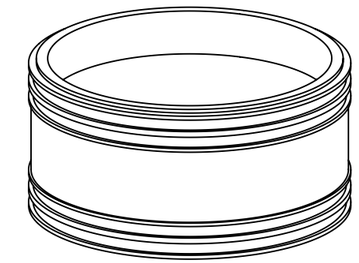

Note
LDC Supplied with:
300 Series High Torque Clamps
RC Shield: .012 x 5.00 w/Clamps 60 in-lb

PROPRIETARY AND CONFIDENTIAL THE INFORMATION CONTAINED IN THIS DRAWING IS THE SOLE PROPERTY OF FERNCO, INC. ANY REPRODUCTION IN PART OR AS A WHOLE WITHOUT THE WRITTEN PERMISSION OF FERNCO, INC. IS PROHIBITED.

TOLERANCES:
Fractional ± 1/4"
.XX= ±.13
ANG.= ±5°
UNLESS OTHERWISE SPECIFIED

Part Weight		Installation Torque	120 in lbs
Min/Max Temp.	-30/140 Degrees F	Conforms to ASTM	D5926, C1173
Pressure Tested		Clamps used	300 Series Stainless
Material	Flexible PVC 60 Duro Shore A	Box Quantity	

UNITS: INCHES
SIZE: A
3RD ANGLE PROJECTION
DO NOT SCALE DRAWING

DESIGNER: N. Goddard
CHECKER:
DATE: 1/7/2016
SCALE: not to scale
SHEET 1 OF 1