KOHLER GENUINE PARTS

Components™

Volume control valve trim with Industrial handle
K-T78025-9-CP

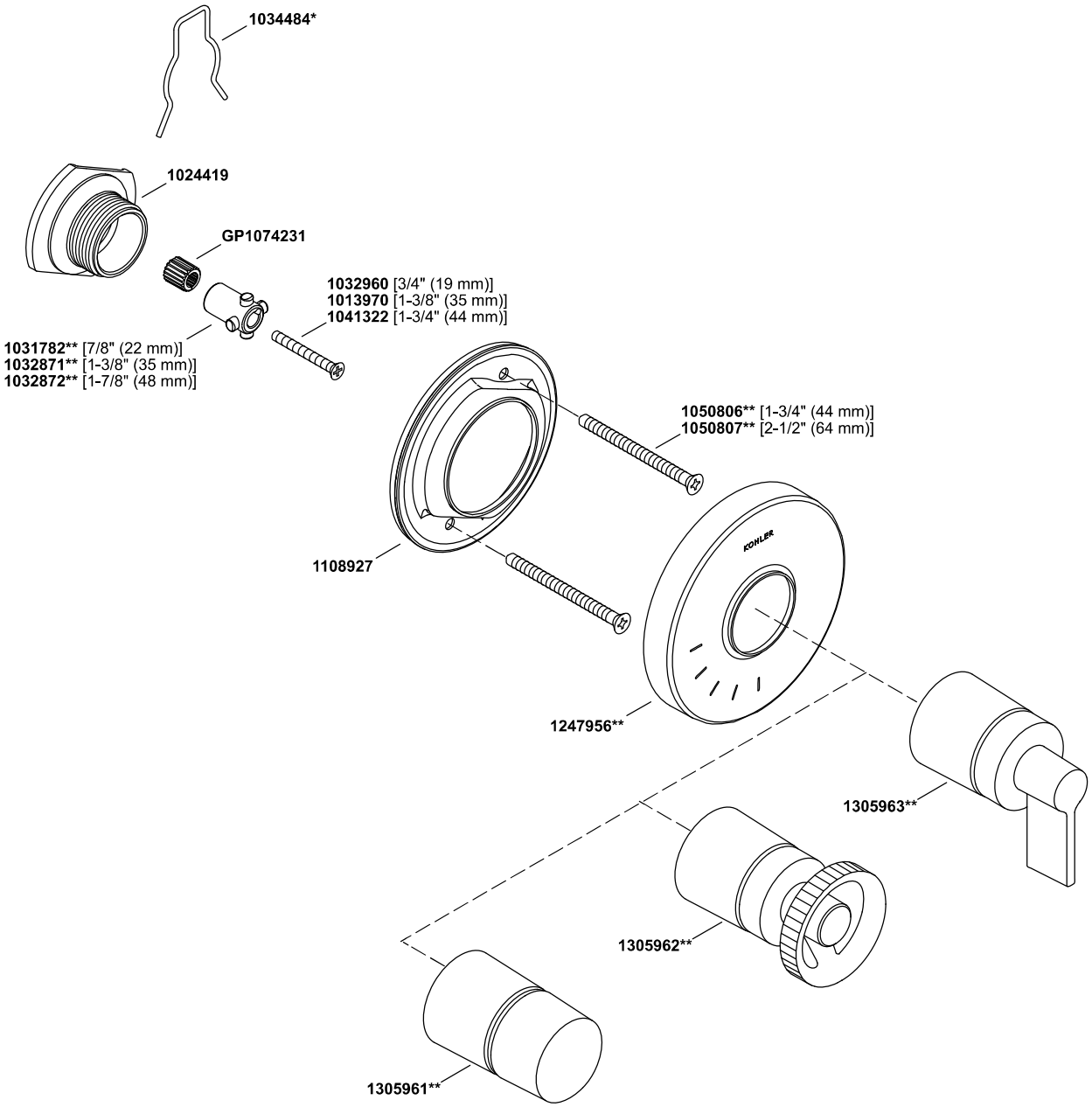

1349717-8-**A**

©2018 Kohler Co.