McElroy Manufacturing, Inc.	DRAWN: BWP	CHECK: LMC	APPRV'D: LMC	DATE: 1/16/84	SHT No: 1	REV No: J	PART No: SW02800
The leader by design.	AUXILARY HEATER HANDLE KIT						
Tulsa, Oklahoma U.S.A.							

NOTE: THIS DRAWING AND THE INFORMATION CONTAINED THEREIN IS THE CONFIDENTIAL AND PROPRIETARY PROPERTY OF McElroy Manufacturing, Inc. THE DRAWING IS NOT TO BE REPRODUCED IN ANY MANNER, SUBMITTED TO OUTSIDE PARTIES FOR EXAMINATION, OR USED DIRECTLY OR INDIRECTLY FOR THE PURPOSES OTHER THAN THOSE FOR WHICH IT WAS FURNISHED WITHOUT WRITTEN PERMISSION OF McElroy Manufacturing, Inc.
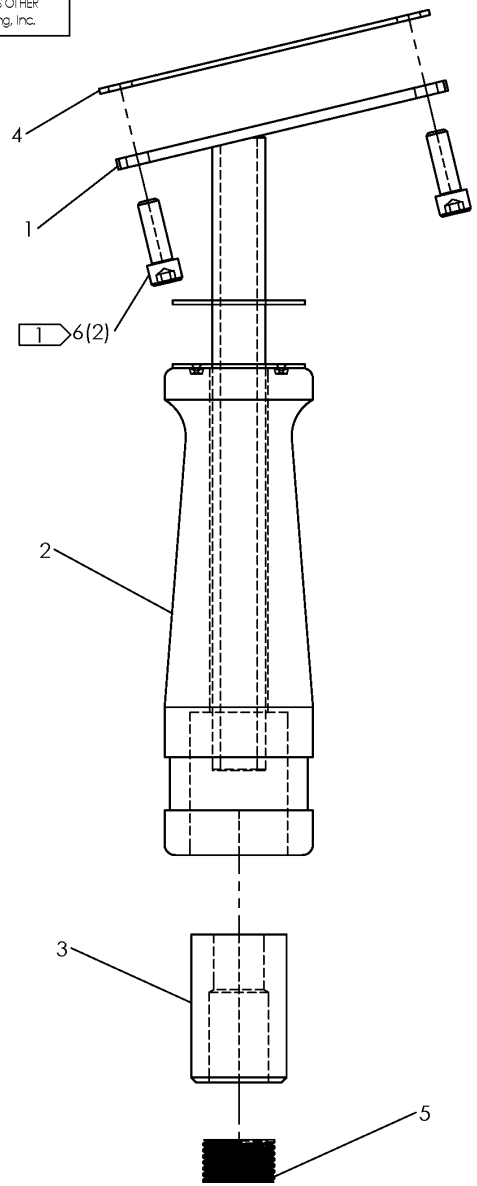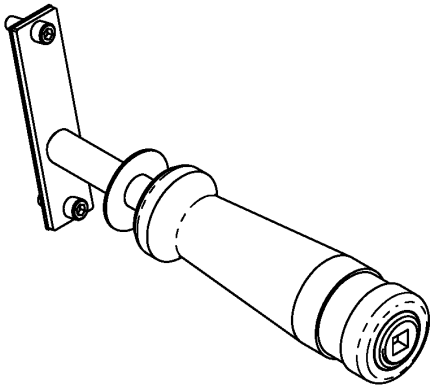
NOTES:
1. INSTALL WITH HIGH TEMPERATURE ANTI-SEIZE COMPOUND.