DIRECT VENT GAS WATER HEATER

A Spanish language version of these instructions is available by contacting the company listed on the rating plate.
La versión espãnola de estas instrucciones se puede obtener al escribirle a la fábrica cuyo nombre aparece en la placa de especificaciones.

INSTALLATION & OPERATING INSTRUCTION MANUAL

WARNING: If the information in these instructions is not followed exactly, a fire or explosion may result causing property damage, personal injury or death.

FOR YOUR SAFETY

- **Do not store or use gasoline or other flammable, combustible, or corrosive vapors and liquids in the vicinity of this or any other appliance.**

– WHAT TO DO IF YOU SMELL GAS

- **Do not try to light any appliance.**
- **Do not touch any electrical switch; do not use any phone in your building.**
- **Immediately call your gas supplier from a neighbor's phone. Follow the gas supplier's instructions.**
- **If you cannot reach your gas supplier, call the fire department.**

– **Installation and service must be performed by a qualified installer, service agency or the gas supplier.**

For your family's comfort, safety and convenience, it is recommended this water heater be installed and serviced by a plumbing professional.

CONGRATULATIONS!

You have just purchased one of the finest water heaters on the market today!

This installation, operation and instruction manual will explain in detail the installation and maintenance of your new Direct Vent Gas Water Heater. We strongly recommend that you contact a plumbing professional for the installation of this water heater.

We require that you carefully read this manual, as well as the enclosed warranty, and refer to it when questions arise. If you have any specific questions concerning your warranty, please consult the plumbing professional from whom your water heater was purchased. For your records we recommend that you write the model, serial number and installation date of your water heater in the maintenance section in the back of this manual.

This manual should be kept with the water heater.

We're committed to providing you with the finest water heater made.

TABLE OF CONTENTS

page

GENERAL INFORMATION 4
- INSTALLATION 5
- Locating The Water Heater 5
- Minimum Clearances 8
- Optional Direct Vent-Air Intake Terminal Guard 9
- Venting 11
- Water Connections 14
- Gas Connections 17

GENERAL OPERATION 18
- Lighting and Shutdown Instructions 19
- Thermostat Adjustment 21
- Burner Flame Checks 23

MAINTENANCE 24

DIAGNOSTICS FOR HONEYWELL CONTROL 27

PARTS LIST AND DRAWING 29

INSTALLATIONS FOR POTABLE WATER AND SPACE HEATING 30

NOTES 31

GENERAL INFORMATION

This gas-fired water heater's design is certified by CSA International under the *American National Standard Z21.10.1* - (latest edition) and *CSA 4.1-M* - (latest edition).

This water heater must be installed in accordance with local codes or, in the absence of local codes, the *National Fuel Gas Code, ANSI Z223.1*- (Latest Edition) and/or in Canada *CAN/CGA B149 Installation Codes* (Latest Editions). The warranty for this water heater is in effect only when the water heater is installed, adjusted, and operated in accordance with these Installation and Operating Instructions. The manufacturer will not be held liable for any damage resulting from alteration and/or failure to comply with these instructions.

This water heater is not design certified for installation in a mobile home. Such an installation may create a hazardous condition and will nullify the warranty.

This water heater has been designed and certified for the purpose of heating potable water. The installation and use of this water heater for any purpose other than the heating of potable water may cause damage to the water heater and create a hazardous condition and nullify the warranty.

⚠ WARNING

Incorrect operation of this appliance may create a hazard to life and property and will nullify the warranty.

Do not use this appliance if any external part has been submerged in water. You should contact a qualified service technician to inspect the appliance and to replace any part of the control system including the combination gas control, which has been submerged in water.

⚠ DANGER

Do not store or use gasoline or other flammable, combustible, or corrosive vapors and liquids in the vicinity of this or any other appliance.

IMPORTANT

Before proceeding, please inspect the water heater and its components for possible damage. **DO NOT** install any damaged components. If damage is evident then please contact the supplier where the water heater was purchased or the manufacturer listed on the rating plate for replacement parts.

Make sure that you check the rating plate and combination gas control on the water heater to be certain that the type of gas being supplied corresponds with the marking on the rating plate and combination gas control.

A sacrificial anode is used to extend tank life. The removal of this anode, for any reason, will nullify the warranty. In areas where water is unusually active, an odor may occur at the hot water faucet due to a reaction between the sacrificial anode and the impurities in the water. If this should happen, an alternative anode may be purchased from the supplier that installed this water heater. This will minimize the odor while protecting the tank. Additionally, the water heater should be flushed with appropriate dissolvers to eliminate any bacteria.

INSTALLATION

⚠ WARNING

Water heaters are heat producing appliances. To avoid damage or injury, do not store materials against the water heater or vent-air intake system. Use proper care to avoid unnecessary contact (especially by children) with the water heater and vent-air intake components. **UNDER NO CIRCUMSTANCES SHALL FLAMMABLE MATERIALS, SUCH AS GASOLINE OR PAINT THINNER BE USED OR STORED IN THE VICINITY OF THIS WATER HEATER, VENT-AIR INTAKE SYSTEM OR IN ANY LOCATION FROM WHICH FUMES COULD REACH THE WATER HEATER OR VENT-AIR INTAKE SYSTEM.**

LOCATING THE WATER HEATER

This water heater **MUST NOT** be installed in any location where gasoline or flammable vapors are likely to be present, unless the installation is such to eliminate the probable ignition of gasoline or flammable vapors.

Water heaters in residential garages must be installed and located, or protected, to avoid physical damage. For other installations refer to local codes. In the absence of local codes, the water heater must be installed in compliance with the National Fuel Gas Code, (ANSI Z223.1-Latest Edition), or in Canada CAN/CGA B149.1 Natural Gas Installation Code (Latest Edition) or CAN/CGA B149.2 Propane Installation Code (Latest Edition).

Installation (Locating The Water Heater) continued-

The location of this water heater is of the utmost importance. Before installing this water heater read the Installation section of these instructions. After reading these Installation and Operating Instructions, select a location for the water heater where the floor is level and is easily accessible to gas and water supply lines. **DO NOT locate the water heater where water lines could be subjected to freezing temperatures**. **Make sure the cold water pipes are not located directly above the gas control so that condensate during humid weather does not drip on the controls**.

This water heater MUST be installed indoors out of the wind and weather.

To comply with NSF requirements this water heater is to be:

a) Sealed to the floor with sealant, in a smooth and easily cleanable way, or
b) Installed with an optional leg kit that includes legs and/or extensions that provide a minimum clearance of 6” beneath the water heater.

Note: For California installation this water heater must be braced, anchored, or strapped to avoid falling or moving during an earthquake. See instructions for correct installation procedures. Instructions may be obtained from DSA Headquarters Office, 1102 Q Street, Suite 5100, Sacramento, CA 95811.

Water heater corrosion and component failure can be caused by the heating and breakdown of airborne chemical vapors. Examples of some typical compounds that are potentially corrosive are: spray can propellants, cleaning solvents, refrigerator and air conditioning refrigerants, swimming pool chemicals, calcium and sodium chloride, waxes and process chemicals. These materials are corrosive at very low concentration levels with little or no odor to reveal their presence. **NOTE: DAMAGE TO THE WATER HEATER CAUSED BY EXPOSURE TO CORROSIVE VAPORS IS NOT COVERED BY THE WARRANTY. DO NOT OPERATE THE WATER HEATER IF EXPOSURE HAS OR WILL OCCUR. DO NOT STORE ANY POTENTIALLY CORROSIVE COMPOUNDS IN THE VICINITY OF THE WATER HEATER.**

⚠ WARNING

Liquefied petroleum gases/propane gas are heavier than air and will remain at floor level if there is a leak. Basements, crawl spaces, closets and areas below ground level will serve as pockets for accumulation of leaking gas. Before lighting, smell all around the appliance area for gas. Be sure to smell next to the floor.

IF YOU SMELL GAS:

- Do not try to light any appliance.
- Do not touch any electric switch; do not use any telephone in your building.
- Immediately call your gas supplier from a neighbor's telephone. Follow the gas supplier's instructions.
- If you cannot reach your gas supplier, call the fire department.

DO NOT OPERATE APPLIANCE UNTIL THE LEAKAGE IS CORRECTED!

DO NOT ATTEMPT TO LIGHT ANY GAS APPLIANCE IF YOU ARE NOT CERTAIN OF THE FOLLOWING:

- Liquefied petroleum gases/propane gas and natural gas have an odorant added by the gas supplier that aids in the detection of the gas.
- Most people recognize this odor as a "sulfur" or "rotten egg" smell.
- Other conditions, such as "odorant fade" can cause the odorant to diminish in intensity, or "fade", and not be as readily detectable.
- If you have a diminished sense of smell, or are in any way unsure of the presence of gas, immediately contact your gas supplier from a neighbor's telephone.
- Gas detectors are available. Contact your gas supplier, or plumbing professional, for more information.

The water heater must be located close enough to the outside wall to keep the venting distance within the maximum distance described in the vent kit's installation instructions. Note: The direct vent-air intake terminal must be installed on a vertical wall. Read the instructions from the vent kit that was purchased with the water heater before locating the water heater.

This water heater must be located in an area where leakage of the tank or water line connections and the combination temperature and pressure relief valve will not result in damage to the area adjacent to the water heater or to lower floors of the structure. When such locations cannot be avoided, a suitable drain pan, adequately drained, must be installed under the water heater. The pan must not restrict combustion airflow. The drain pan must have a minimum length and width of at least 4 in. (10.2 cm) greater than the diameter of the water heater and must not restrict proper combustion air flow to the water heater. The drain pan, as described above, can be purchased from your plumbing professional. The drain pan must be piped to an adequate drain. The piping must be at least 3/4 inch *(1.9 cm)* in diameter and pitched for proper drainage.

It is recommended that a minimum clearance of four (4) inches *(10.2 cm)* be provided on the side of the water heater for servicing and maintenance of the combination temperature and pressure relief valve.

MINIMUM CLEARANCES

⚠ WARNING

Failure to adhere to these installation and operating instructions may create a hazard to life and property and will nullify the warranty.

This installation must allow access to the front of the water heater and adequate clearance must be provided for servicing and operating this water heater. The water heater may be installed on either a combustible or non-combustible floor. If the water heater is to be installed directly on carpeting, it must be installed on top of a metal or wood panel extending beyond the full width and depth of the appliance by at least three (3) inches *(76.2 mm)* in any direction or, if the appliance is to be installed in an alcove or closet, the entire floor must be covered by the panel. The minimum clearances to combustibles for this water heater is: zero (0) inch *(0 cm)* from the sides and rear, four (4) inches *(10.2 cm)* from the front of the jacket, zero (0) inch *(0 cm)* from the plenum, zero (0) inch *(0 cm)* from the air intake tubes and twelve (12) inches *(30.5 cm)* from the direct vent-air intake terminal. (See Figure 1).

OPTIONAL DIRECT VENT-AIR INTAKE TERMINAL GUARD

⚠ WARNING

The direct vent-air intake terminal is HOT while the water heater is in operation. Do not touch. Keep children, combustibles, gasoline and other liquids having flammable vapors away.

It is recommended that a vent-air intake terminal guard be installed when the vent-air intake terminal is located where it can be touched accidentally, or accessed by children. (See Figure 2).

A chain link or louvered fence may be used instead of the vent-air intake terminal guard. Maintain proper clearances as specified in this instruction manual to the vent-air intake terminal. (See Figure 3).

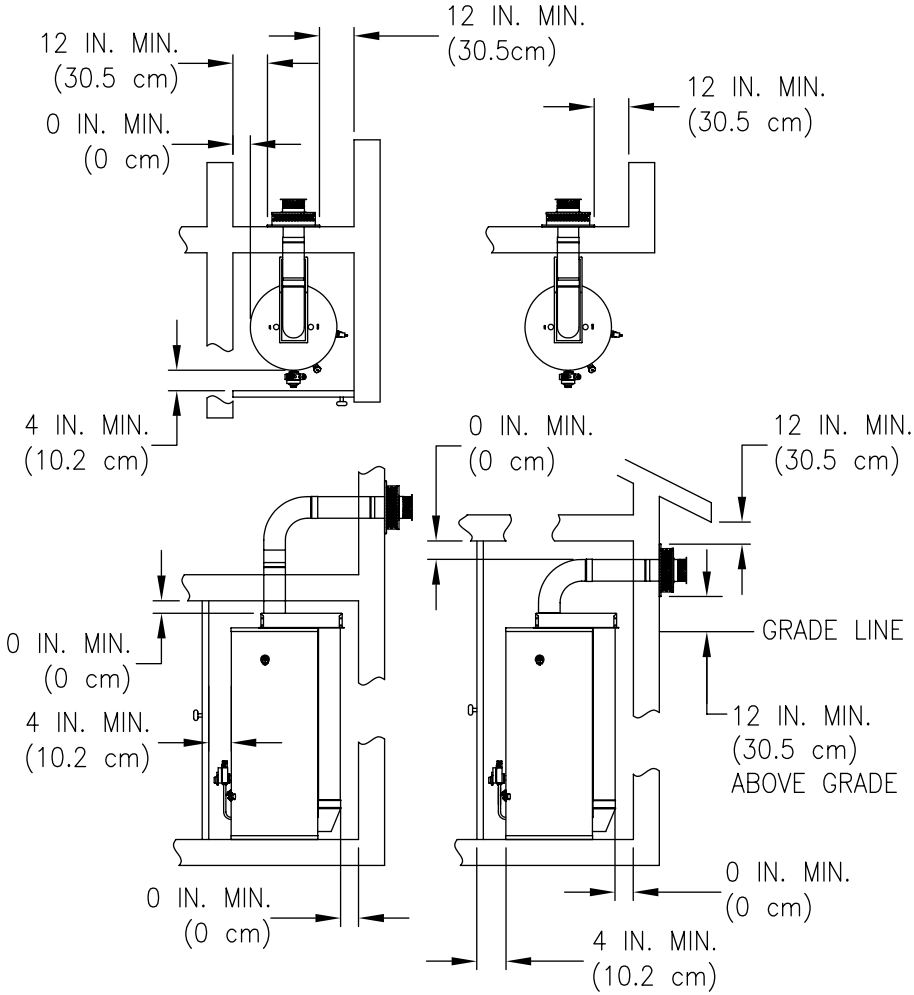

Figure 1

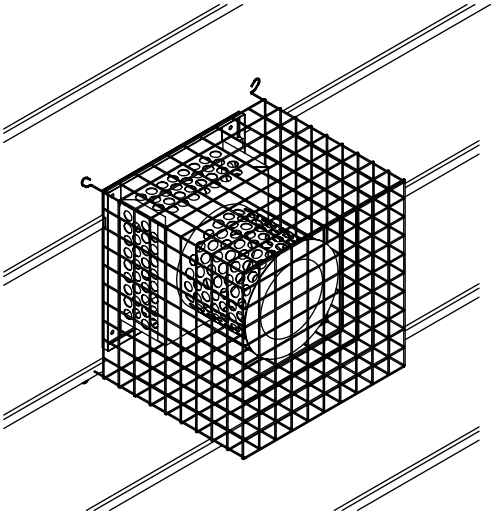

Figure 2

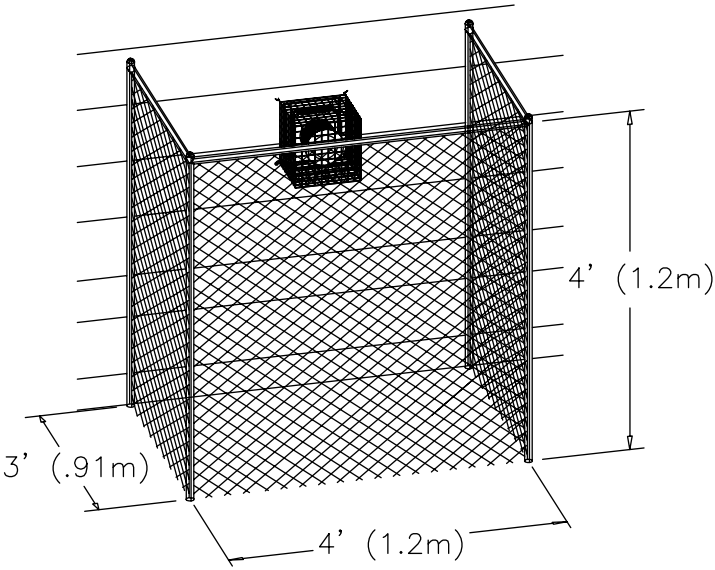

Figure 3

VENTING

⚠ WARNING

The vent-air intake system must be properly installed. Failure to properly install the vent-air intake system could result in property damage, personal injury or death.

DO NOT install any damaged vent-air intake system components. Contact the manufacturer of the water heater for replacement parts.

This is a Direct Vent Gas Water Heater where all air for combustion is obtained from the outside atmosphere and all flue gases are discharged to the outside atmosphere. **A vent kit that was designed for use with this water heater must be used when installing this water heater. If a vent kit was provided with the water heater, install the water heater with that vent kit per the instructions provided in the vent kit. If a vent kit was not provided with the water heater, refer to the label on the water heater to determine the proper vent kit options. Contact the supplier that you purchased the water heater from to obtain the correct vent kit.**

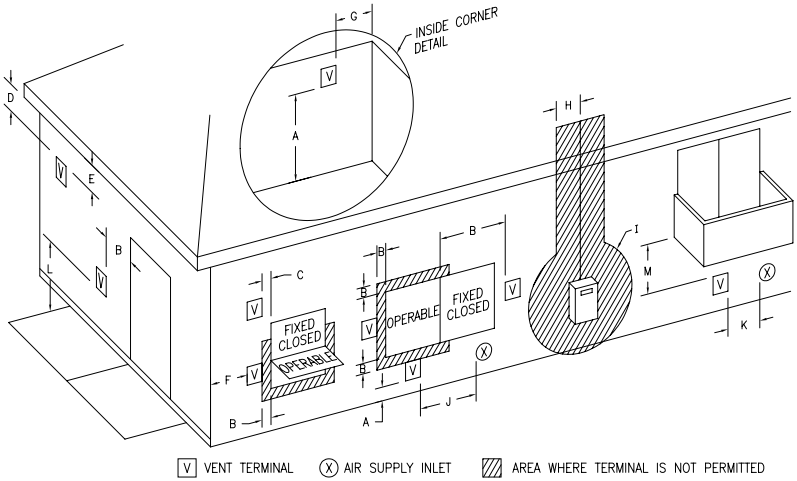

Figure 4
Direct Vent Terminal Clearances

		Canadian Installations1	US Installations2
A=	Clearance above grade, veranda, porch, deck or balcony	12 inches (30 m)	12 inches (30 cm)
B=	Clearance to widow or door that may be opened	12 inches (30 m)	9 inches (23 cm) for appliances > 10,000 Btuh (3 kW) and ≤ 50,000 Btuh (15 kW), 12 inches (30 cm) for appliances > 50,000 Btuh (15 kW)
C=	Clearance to permanently closed widow	*b	*b
D=	Vertical clearance to ventilated soffit located above the terminal within a horizontal distance of 2 feet (61 cm) from the center line of the terminal	12 inches (30 cm) *a	12 inches (30 cm) *a
E=	Clearance to unventilated soffit	12 inches (30 cm) *a	12 inches (30 cm) *a
F=	Clearance to outside corner	*b	*b
G=	Clearance to inside corner	*b	*b
H=	Clearance to each side of center line extended above meter/regulator assembly	3 feet (91 cm) within a height 15 feet (4.6 m) above the meter/regulator assembly	*b
I=	Clearance to service regulator vent outlet or oil tank vent	36 inches (91 cm)	*b
J=	Clearance to non-mechanical air supply inlet to building or the combustion air inlet to any other appliance	12 inches (30 cm)	9 inches (23 cm) for appliances > 10,000 Btuh (3 kW) and ≤ 50,000 Btuh (15 kW), 12 inches (30 cm) for appliances > 50,000 Btuh (15 kW)
K=	Clearance to a mechanical air supply inlet	6 feet (1.83 m)	3 feet (91 cm) above if within 10 feet horizontally
L=	Clearance above paved sidewalk or paved driveway located on public property	7 feet (2.13 m)†	*b
M=	Clearance under a veranda, porch, deck, or balcony	12 inches (30 cm) ‡	*b

Venting continued-

[1] In accordance with the current CAN/CGA-B149 *Installation Codes*.
[2] In accordance with the current ANSI Z223.1-(Latest edition)/NFPA 54 *National Fuel Gas Code*.
† A vent must not terminate directly above a sidewalk or paved driveway that is located between two single-family dwellings and serves both dwellings.
‡ Permitted only if a veranda, porch, deck or balcony is fully open on a minimum of two sides beneath the floor.
*a) A minimum clearance value determined by testing in accordance with section 2.20.
*b) "Clearance in accordance with local installation codes and the requirements of the gas supplier".

The vent system must terminate so that proper clearances are maintained as cited in local codes or the latest edition of the National Fuel Gas Code, ANSI Z223.1 – (latest edition) as follows:

1. Do not terminate near soffit vents or crawl space or other area where condensate or vapor could create a nuisance or hazard or cause property damage.
2. Do not terminate the exhaust vent terminal where condensate or vapor could cause damage or could be detrimental to the operation of regulators, relief valves, or other equipment.
3. Do not terminate the exhaust vent terminal over public area or walkways where condensate or vapor can cause nuisance or hazard.
4. The vent must terminate a minimum of 12 inches above expected snowfall level to prevent blockage of vent termination.

Vent pipes serving direct vent appliances are classified by building codes as "vent connectors". Required clearances from combustible materials must be provided in accordance with information in this manual under LOCATION OF WATER HEATER and CLEARANCES, and with National Fuel Gas Code and local code.

WATER CONNECTIONS

Note: BEFORE PROCEEDING WITH THE INSTALLATION, CLOSE THE MAIN WATER SUPPLY VALVE.

After shutting off the main water supply, open a faucet to relieve the water line pressure to prevent any water from leaking out of the pipes while making the water connections to the water heater. After the pressure has been relieved, close the faucet. The COLD water inlet and HOT water outlet are identified on the top of the water heater. The fittings at the cold water inlet and hot water outlet are dielectric waterway fittings with 3/4” NPT male thread. Make the proper plumbing connections between the water heater and the plumbing system to the house. Install a shut-off valve in the cold water supply line.

⚠ CAUTION

If sweat fittings are to be used, **DO NOT** apply heat to the nipples on top of the water heater. Sweat the tubing to the adapter before fitting the adapter to the water connections. It is imperative that heat is not applied to the nipples containing a plastic liner.

⚠ DANGER

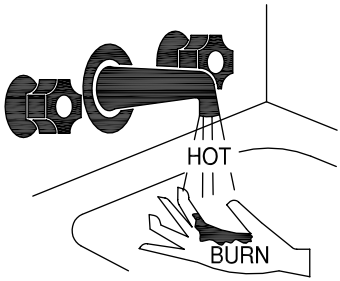

Water temperature over 125°F can cause severe burns instantly or death from scalds.

Children, disabled and elderly are at highest risk of being scalded.

Review this instruction manual before setting temperature at water heater.

Feel water before bathing or showering.

Temperature limiting valves are available.

APPROXIMATE TIME/TEMPERATURE RELATIONSHIPS IN SCALDS	
120°F (49°C)	More than 5 minutes
125°F (52°C)	1½ to 2 minutes
130°F (54°C)	About 30 seconds
135°F (57°C)	About 10 seconds
140°F (60°C)	Less than 5 seconds
145°F (63°C)	Less than 3 seconds
150°F (66°C)	About 1½ seconds
155°F (68°C)	About 1 second

⚠ WARNING

For protection against excessive temperatures and pressure, install temperature and pressure protective equipment required by local codes, but not less than a combination temperature and pressure relief valve certified by a nationally recognized testing laboratory that maintains periodic inspection of production of listed equipment or materials as meeting the requirements of the Standard for *Relief Valves and Automatic Gas Shutoff Devices for Hot Water Supply Systems, ANSI Z21.22* and the Standard *CAN1-4.4 Temperature, Pressure, Temperature and Pressure Relief Valves and Vacuum Relief Valves*. The combination temperature and pressure relief valve must be marked with a maximum set pressure not to exceed the maximum working pressure of the water heater. The hourly BTU discharge capacity or the rated steam relief capacity of the combination temperature and pressure relief valve must not be less than the input rating of the water heater.

Install the combination temperature and pressure relief valve into the opening provided and marked for this purpose on the water heater.

Note: Some models may already be equipped or supplied with a combination temperature and pressure relief valve. Verify that the combination temperature and pressure relief valve complies with local codes. If the combination temperature and pressure relief valve does not comply with local codes, replace it with one that does. Follow the installation instructions above on this page.

Install a discharge line that terminates six (6) inches *(15 cm)* above the floor, or any distance below the structural floor, to the outlet of the combination temperature and pressure relief valve. **DO NOT** allow water from the discharge line to contact any live electrical part. The discharge line is to be installed to allow for complete drainage of both the combination temperature and pressure relief valve and the discharge line. The water from the discharge line must be directed to a suitable drain or area that will not be damaged by water Refer to “LOCATING THE WATER HEATER.” The discharge opening must not be subjected to blockage or freezing. **DO NOT** thread, plug or cap the discharge line.

It is recommended that a minimum clearance of four (4) inches *(10.2 cm)* be provided on the side of the water heater for servicing and maintenance of the combination temperature and pressure relief valve.

Do not place a shutoff valve between the combination temperature and pressure relief valve and the water heater, or on discharge pipes between such valves or the atmosphere.

⚠ WARNING

FAILURE TO INSTALL AND MAINTAIN A NEW, LISTED 3/4" X 3/4" TEMPERATURE AND PRESSURE RELIEF VALVE WILL RELEASE THE MANUFACTURER FROM ANY CLAIM, WHICH MIGHT RESULT FROM EXCESSIVE TEMPERATURES AND PRESSURES.

If this water heater is installed in a closed water supply system, such as the one having a back-flow preventer in the cold water supply, provisions must be made to control thermal expansion. **DO NOT** operate this water heater in a closed system without provisions for controlling thermal expansion. Your water supplier or local plumbing inspector should be contacted on how to control this situation.

After installation of the water lines, open the main water supply valve and fill the water heater. While the water heater is filling, open several hot water faucets to allow air to escape from the water system. When a steady stream of water flows through the faucets, close them and check all water connections for possible leaks. **NEVER OPERATE THE WATER HEATER WITHOUT FIRST BEING CERTAIN IT IS FILLED WITH WATER.**

⚠ WARNING

Hydrogen gas can be produced in an operating water heater that has not had water drawn from the tank for a long period of time (generally two (2) weeks or more). Hydrogen gas is extremely flammable. To prevent the possibility of injury under these conditions, we recommend the hot water faucet to be open for several minutes at the kitchen sink before you use any electrical appliance that is connected to the hot water system. If hydrogen is present, there will be an unusual sound such as air escaping through the pipes as hot water begins to flow. Do not smoke or have open flame near the faucet at the time it is open.

This water heater can deliver scalding temperature water at any faucet in the system. Be careful whenever using hot water to avoid scalding injury. Certain appliances such as dishwashers and automatic clothing washers may require increased temperature water. By setting the thermostat on this water heater to obtain the increased temperature water required by these appliances, you may create the potential for scald injury. To protect against injury, you should install an ASSE approved mixing valve in the water system. This valve will reduce point of discharge temperature by mixing cold and hot water in branch supply lines. Such valves are available from the manufacturer of this water heater or a local plumbing supplier. Please consult with a plumbing professional.

Gas Connections

The gas supply lines must meet all requirements of the National Fuel Gas Code (ANSI Z223.1-Latest Edition), or in Canada CAN/CGA B149.1 Natural Gas Installation Code (Latest Edition) or CAN/CGA B149.2 Propane Installation Code (Latest Edition).

The minimum permissible gas supply pressure for the purpose of input adjustment is one (1.0) inch *(0.25 kPa)* water column above the operating manifold pressure. See the rating plate and gas valve for the manifold pressure and gas type. The maximum permissible gas supply pressure is fourteen (14.0) inches *(3.5 kPa)* water column for natural gas and liquefied petroleum gases/propane gas.

1. Connect this water heater only to the type of gas (Natural or Propane gas) as shown on the rating plate. Use clean black iron pipe or equivalent material approved by local codes and ordinances. (Dirt and scale from the pipe can enter the gas valve and cause it to malfunction). The inlet gas line must have a minimum length of three (3) inches *(7.6 cm)* drip leg *(sediment trap)* installed as close to the water heater's gas valve as possible. A ground joint union must be installed as close to the water heater as possible in the gas supply line feeding the water heater to permit servicing of the water heater. Compounds used on the threaded joints of the gas piping must be resistant to the action of liquefied petroleum gases/propane gas. DO NOT apply pipe dope to the gas valve inlet and make certain that no pipe dope has become lodged in the inlet screen of the gas valve. Extreme care must be taken to ensure no pipe dope enters the gas valve. Avoid excessive torque when tightening the gas supply line to the gas valve. Excessive torque may result in cracking of the gas valve housing and could create a gas leak. When tightening gas supply line to L.P. control, it is recommended to hold the inlet body of the control securely with an adequate wrench. The suggested maximum torque is 31.5 ft. lbs. (4.4 kg-m).

⚠ WARNING

The manufacturer of this water heater will not be liable for any damage or injury caused as a result of a cracked gas inlet as a result of excessive torque.

2. This water heater and its gas connection must be leak tested before placing the water heater in operation. Check for gas leaks with a soap and water solution and a brush or a commercial leak detector fluid. **NEVER USE A MATCH OR OPEN FLAME FOR TESTING!**

⚠ CAUTION

The water heater and individual shutoff valve must be disconnected from the gas supply piping system during any pressure testing of the system at test pressures in excess of 1/2 psi (3.5 kPa). The water heater must be isolated from the gas supply piping system by closing its manual shutoff valve during any pressure testing of the gas supply system at test pressures equal to or less than 1/2 psi (3.5 kPa). The supply line must be capped when not connected to the water heater.

3. While checking for leaks care must be taken to prevent solution from contacting the electrical connections at the control. If electrical connections at the control become wet, they must be thoroughly dried before attempting to operate the water heater.

⚠ WARNING

The gas inlet pressure to the gas control must never exceed 14 inches of water column (1/2 psi). The gas supply system and any pressure regulating device in the gas line must be specified, inspected and adjusted to assure a gas supply pressure of 1/2 psi or less. Failure to do so may result in serious injury or death.

GENERAL OPERATION

⚠ WARNING

Water heaters are heat producing appliances. To avoid damage or injury, do not store materials against the water heater or vent-air intake system. Use proper care to avoid unnecessary contact (especially by children) with the water heater and vent-air intake system. **UNDER NO CIRCUMSTANCES MUST FLAMMABLE MATERIALS, SUCH AS GASOLINE OR PAINT THINNER BE USED OR STORED IN THE VICINITY OF THIS WATER HEATER, VENT-AIR INTAKE SYSTEM OR IN ANY LOCATION FROM WHICH FUMES COULD REACH THE WATER HEATER OR VENT-AIR INTAKE SYSTEM.**

TO FILL THE WATER HEATER

1. Close the water heater drain valve by turning the knob clockwise ↻.
2. Open the cold water supply shut-off valve.
3. Open several hot water faucets to allow air to escape from the system.
4. When a steady stream of water flows from the faucets, the water heater is filled. Close the faucets and check for water leaks at the water heater drain valve, combination temperature and pressure relief valve and the hot and cold water connections.

TO DRAIN THE WATER HEATER

Should it become necessary to completely drain the water heater, make sure you follow the steps below:

1. Set the thermostat dial to the lowest possible position.
2. Rotate and if applicable partially depress gas control knob clockwise ↻ to the "OFF" position.
3. Shut off the gas supply to the water heater.
4. Close the cold water supply shut-off valve.
5. Open the drain valve on the water heater by turning the knob counter-clockwise ↺. The drain valve has threads on the end that will allow the connection of a standard hose coupling.
6. Open a hot water faucet to allow air to enter the system.

To refill the water heater, refer to "To Fill the Water Heater."

⚠ WARNING

Wait at least (2) minutes after this control is pressurized with gas before attempting to light pilot and/or push igniter button. Failure to do so may result in serious injury.

Lighting & Shutdown Instructions – White Rodgers and Robertshaw gas control.

FOR YOUR SAFETY READ BEFORE LIGHTING

WARNING: If you do not follow these instructions exactly, a fire or explosion may result causing property damage, personal injury or loss of life.

A. This appliance has a pilot which is lit by a piezo-electric spark gas ignition system. Do not open the inner door and attempt to light the pilot by hand.

B. BEFORE LIGHTING smell all around the appliance area for gas. Be sure to smell next to the floor because some gas is heavier than air and will settle on the floor.

WHAT TO DO IF YOU SMELL GAS.
* Do not try to light any appliance.
* Do not touch any electric switch; do not use any phone in your building.
* Immediately call your gas supplier from a neighbor's phone. Follow the gas supplier's instructions.
* If you cannot reach your gas supplier, call the fire department.

C. Use only your hand to push in or turn the gas control knob. Never use tools. If the knob will not push in or turn by hand, don't try to repair it, call a qualified service technician. Force or attempted repair may result in a fire or explosion.

D. Do not use this appliance if any part has been under water. Immediately call a qualified service technician to inspect the appliance and to replace any part of the control system and any gas control which has been under water.

LIGHTING INSTRUCTIONS

1. STOP! Read the safety information above on this label.
2. Set the thermostat to lowest setting.
3. Rotate and if applicable partially depress gas control knob clockwise ↷ to "OFF" position.

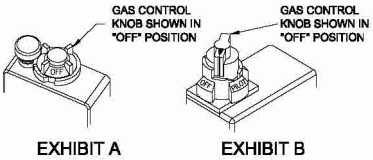

EXHIBIT A EXHIBIT B

NOTE: On exhibit B, knob cannot be turned from "PILOT" to "OFF" unless knob is depressed slightly. Do not force.

4. Wait five (5) minutes to clear out any gas. Then smell for gas, including near the floor. If you smell gas, STOP! Follow "B" in the safety information above on this label. If you don't smell gas, go to the next step.
5. Remove outer door.
6. Locate piezo igniter button.
7. Look into sight glass window on inner door to view pilot.

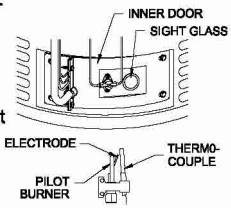

8. Turn the gas control knob counterclockwise ↶ to "PILOT" position.

9a. FOR EXHIBIT A GAS CONTROLS-
Depress and hold down red pilot set button. Immediately depress piezo igniter button until you hear a "click" sound, then release. Continue to hold down the pilot set button for about one (1) minute after the pilot is lit. Release the pilot set button and it should pop back up. Pilot should remain lit. If it goes out, repeat steps 3 through 9.

9b. FOR EXHIBIT B GAS CONTROLS-
Depress and hold down gas control knob. Immediately depress piezo igniter button until you hear a "click" sound, then release. Continue to hold down the knob for about one (1) minute after the pilot is lit. Release the knob and it should pop back up. Pilot should remain lit. If it goes out, repeat steps 3 through 9.

FOR EXHIBIT A & B GAS CONTROLS-
- If button or knob does not pop up when released, stop and immediately call your service technician or gas supplier.
- If the pilot will not stay lit after several tries, turn the gas control knob to "OFF" and call your technician or gas supplier.

10. Replace outer door.
11. Turn gas control knob counterclockwise ↶ to "ON" position.
12. Set thermostat to desired setting.

TO TURN OFF GAS TO APPLIANCE

1. Set the thermostat dial to lowest possible setting.
2. Rotate and if applicable partially depress gas control knob clockwise ↷ to "OFF" position.

FOR YOUR SAFETY READ BEFORE LIGHTING

WARNING: If you do not follow these instructions exactly, a fire or explosion may result causing property damage, personal injury or loss of life.

A. This appliance has a pilot which is lit by a piezo-electric spark gas ignition system. Do not open the inner door and attempt to light the pilot by hand.

B. BEFORE LIGHTING smell all around the appliance area for gas. Be sure to smell next to the floor because some gas is heavier than air and will settle on the floor.

WHAT TO DO IF YOU SMELL GAS.
* Do not try to light any appliance.
* Do not touch any electric switch; do not use any phone in your building.
* Immediately call your gas supplier from a neighbor's phone. Follow the gas supplier's instructions.
* If you cannot reach your gas supplier, call the fire department.

C. Use only your hand to push in or turn the gas control knob. Never use tools. If the knob will not push in or turn by hand, don't try to repair it, call a qualified service technician. Force or attempted repair may result in a fire or explosion.

D. Do not use this appliance if any part has been under water. Immediately call a qualified service technician to inspect the appliance and to replace any part of the control system and any gas control which has been under water.

LIGHTING INSTRUCTIONS

1. STOP! Read the safety information above on this label.
2. Set the gas control knob to the " OFF" position.

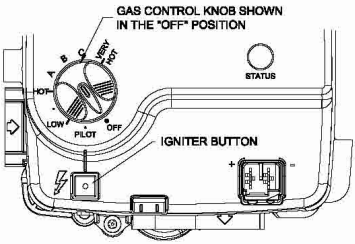

3. Wait five (5) minutes to clear out any gas. Then smell for gas, including near the floor. If you smell gas, STOP! Follow "B" in the safety information above on this label. If you don't smell gas, go to the next step.
4. Remove outer door.
5. Locate igniter button.
6. Look through sight glass window on on inner door to view pilot.

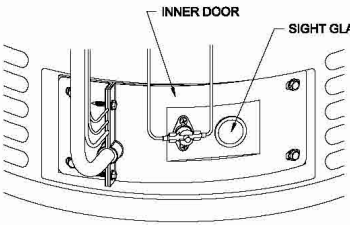

7. Turn the gas control knob clockwise to "PILOT" position.
8. Depress and hold in gas control knob. Immediately press igniter button until you hear a "click" sound, then release. Continue to hold down the gas control knob until the status light blinks. Release the gas control knob. It should pop back out. Check to see if the pilot is still lit. If the pilot goes out, repeat steps 2 through 8.
   - If gas control knob does not pop out when released, stop and immediately call your service technician or gas supplier.
   - If the pilot will not stay lit after several tries, turn the gas control knob to "OFF" and call your technician or gas supplier.
9. Replace outer door.
10. Turn gas control knob to desired setting.

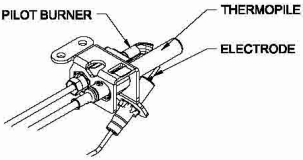

TO TURN OFF GAS TO APPLIANCE

1. Turn the gas control knob counterclockwise to the "OFF" position.

THERMOSTAT ADJUSTMENT - White Rodgers gas control.

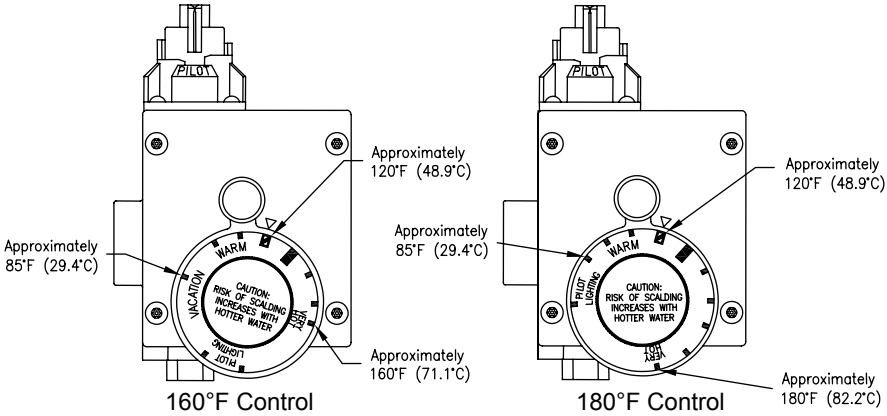

Figure 5

The thermostat dial is set to its lowest temperature setting when shipped from the factory. **Remember that lower temperature settings are more energy efficient**. Adjust the temperature by turning the thermostat dial. It is suggested that the starting point setting not be greater than the "▲" or "▮" mark on the thermostat dial (approximately 120°F [48.9°C]) as indicated above. Rotate the thermostat dial **clockwise** to <u>decrease</u> the temperature setting. Rotate the thermostat dial **counter-clockwise** to <u>increase</u> the temperature setting. Adjust the dial until the minimum acceptable temperature is achieved (See figure 5 above for approximate temperature settings).

Robertshaw gas control.

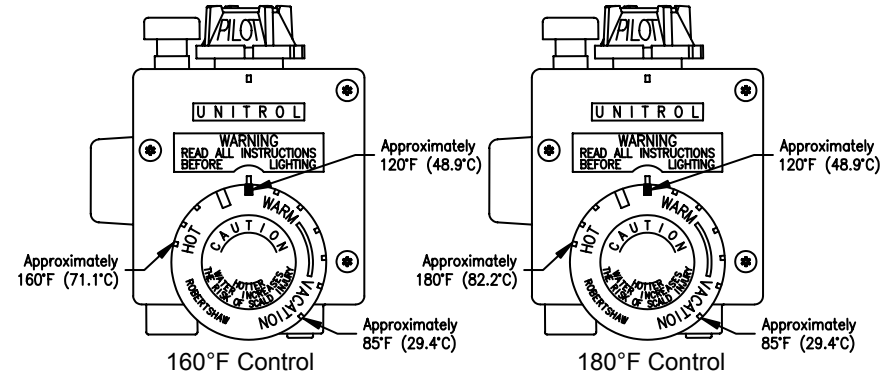

Figure 6

The thermostat dial is set to its lowest temperature setting when shipped from the factory. **Remember that lower temperature settings are more energy efficient**. Adjust the temperature by turning the thermostat dial. It is suggested that the starting point setting not be greater than the "▮" mark on the thermostat dial (approximately 120°F [48.9°C]) as indicated above. Rotate the thermostat dial **counter-clockwise** to <u>decrease</u> the temperature setting. Rotate the thermostat dial **clockwise** to <u>increase</u> the temperature setting. Adjust the dial until the minimum acceptable temperature is achieved (See figure 6 above for approximate temperature settings).

Thermostat Adjusting continued – Honeywell control.

160°F (71.1°C) CONTROL

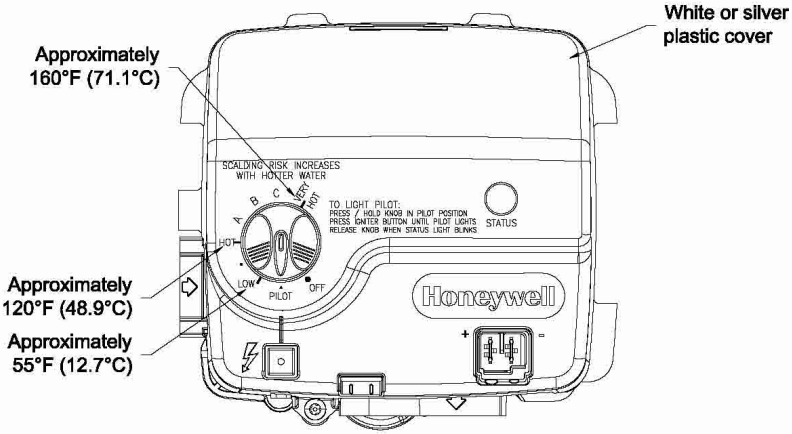

FIGURE 7

The thermostat dial is set to its lowest temperature setting when shipped from the factory. **Remember that lower temperature settings are more energy efficient**. Adjust the temperature by turning the termostat dial. It is suggested that the starting point setting not be greater than the "HOT" mark on the thermostat dial (approximately 120°F [48.9°C]) as indicated above. Rotate the thermostat dial **counter-clockwise** to decrease the temperature setting. Rotate the termostat dial **clockwise** to increase the temperature setting. Adjust the dial until the minimum acceptable temperature is achieved (See figure 7 above for approximate temperature settings).

180°F (82.2°C) CONTROL

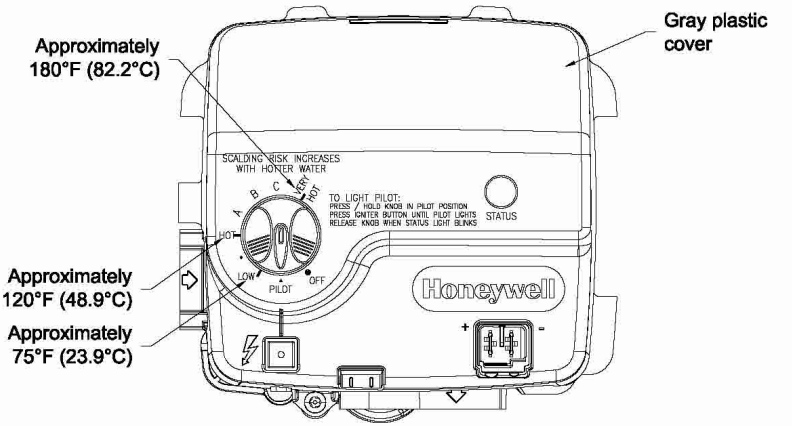

FIGURE 8

The thermostat dial is set to its lowest temperature setting when shipped from the factory. **Remember that lower temperature settings are more energy efficient**. Adjust the temperature by turning the termostat dial. It is suggested that the starting point setting not be greater than the "HOT" mark on the thermostat dial (approximately 120°F [48.9°C]) as indicated above. Rotate the thermostat dial **counter-clockwise** to decrease the temperature setting. Rotate the termostat dial **clockwise** to increase the temperature setting. Adjust the dial until the minimum acceptable temperature is achieved (See figure 8 above for approximate temperature settings).

⚠ DANGER

Hotter water increases the risk of scald injury. Scalding may occur within five (5) seconds at a temperature setting of 140° F (60° C). To protect against hot water injury, install an ASSE approved mixing valve in the water system. This valve will reduce point of discharge temperature by mixing cold and hot water in branch water lines. A licensed plumbing professional or local plumbing authority should be consulted.

Note: This water heater is equipped with an energy cut out device to prevent overheating. Should overheating occur or the gas supply fail to shut off, turn off the manual gas control valve to the appliance and call a qualified service technician.

Note: Whenever the water heater is filled with cold water, condensate will form on the cool tank surface and drops of water will fall on the hot burner and combustion chamber surfaces producing a “sizzling” noise. Condensation is normal and does not indicate a leak. It will disappear when the tank becomes heated.

BURNER FLAME CHECKS

At the time of installation and at periodic intervals (not more than six (6) months), a visual check of the pilot and main burner flames should be conducted. The flames should be similar to those pictured below. The main burner should light smoothly from the pilot. (See Figure 9).

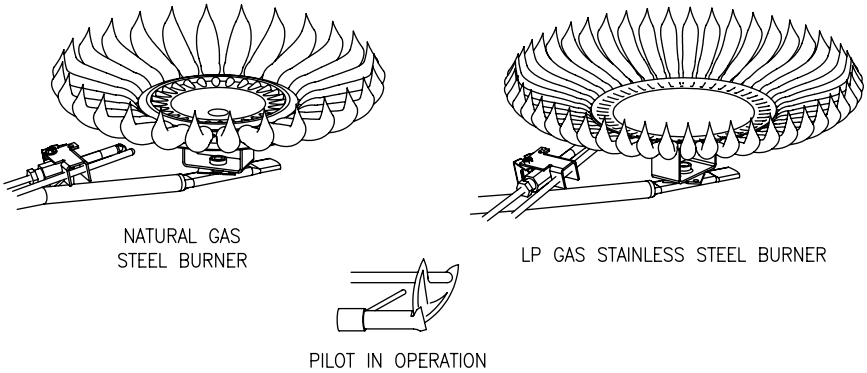

Figure 9

MAINTENANCE

⚠ WARNING

Water heaters are heat producing appliances. To avoid damage or injury, do not store materials against the water heater or vent-air intake system. Use proper care to avoid unnecessary contact (especially by children) with the water heater and vent-air intake system. **UNDER NO CIRCUMSTANCES MUST FLAMMABLE MATERIALS, SUCH AS GASOLINE OR PAINT THINNER BE USED OR STORED IN THE VICINITY OF THIS WATER HEATER, VENT-AIR INTAKE SYSTEM OR IN ANY LOCATION FROM WHICH FUMES COULD REACH THE WATER HEATER OR VENT-AIR INTAKE SYSTEM.**

IMPORTANT

The water heater should be inspected at a minimum annually by a qualified service technician for damaged components and/or joints not sealed. DO NOT operate this water heater if any part is found damaged or if any joint is found not sealed.

The following maintenance should be performed by a qualified service technician at the minimum periodic intervals suggested below. In some installations the maintenance interval may be more frequent depending on upon the amount of use and the operating conditions of the water heater. Regular inspection and maintenance of the water heater and vent-air intake system will help to insure safe and reliable operation.

1. Annually check the operation of the thermostat.
2. The flow of combustion and ventilation air **MUST NOT** be restricted. Annually inspect the direct vent-air intake terminal to insure it is not blocked or damaged. Clear the direct vent-air intake terminal openings of any dirt, dust, or other restrictions. **WARNING!** Certain areas of the direct vent-air intake terminal are **HOT**.
3. Annually inspect the vent-air intake system to insure that all components are securely fastened and all joints and seams are properly sealed.
4. At all times keep the water heater area clear and free from combustible materials, gasoline and other flammable vapors and liquids.
5. Bi-annually conduct a visual check of the main and pilot burner flames to determine that they are burning properly. See “BURNER FLAME CHECKS.”

6. Annually remove the inner door and main burner assembly to clean orifices and related parts of any dirt or other foreign material. Inspect the burner ports for obstructions or debris and clean with a wire brush as needed. Wire brush and/or vacuum clean the combustion chamber as needed to remove scale deposits and debris. Inspect the inner door gasket for wear and tear and replace if necessary. **NOTE:** It is imperative for proper operation of the water heater that the inner door be properly sealed.

7. At least once a year, check the combination temperature and pressure relief valve to insure that the valve has not become encrusted with lime. Lift the lever at the lever at the top of the valve several times until the valve seats properly without leaking and operates freely.

⚠ WARNING

When lifting lever of the combination temperature and pressure relief valve, hot water will be released under pressure. Be careful that any released water does not result in bodily injury or property damage.

8. Monthly, drain off a gallon of water to remove silt and sediment by using the water heater's drain valve.

⚠ WARNING! THIS WATER MAY BE HOT.

9. If the combination temperature and pressure relief valve on the appliance discharges periodically, this may be due to thermal expansion in a closed water supply system. Contact the water supplier or local plumbing inspector on how to correct this situation. Do not plug the combination temperature and pressure relief valve outlet.

10. A combination sacrificial anode rod/hot water outlet nipple has been installed to extend tank life. The anode rod should be inspected periodically (every two (2) years) and replaced when necessary to prolong tank life. Contact the plumbing professional who installed the water heater or the manufacturer listed on the rating plate for anode replacement information. The use of a water softener may increase the speed of anode consumption. More frequent inspection of the anode is needed when using softened (or phosphate treated) water.

11. The vent system must be inspected at least once a year to ensure against leakage of exhaust products.

⚠ CAUTION

FOR YOUR SAFETY, **DO NOT** ATTEMPT REPAIR OF COMBINATION GAS CONTROL, BURNERS OR GAS PIPING. REFER REPAIRS TO A QUALIFIED SERVICE TECHNICIAN.

Contact your supplier or plumbing professional for replacement parts or contact the company at the address given on the rating plate of the water heater.

Provide the part name, model and serial numbers of the water heater when ordering parts.

READ THE WARRANTY FOR A FULL EXPLANATION OF THE LENGTH OF TIME THAT PARTS AND THE WATER HEATER ARE WARRANTED.

Manufactured under one or more of the following U.S. Patents: RE.34,534; B1 5,341,770; 4,416,222; 4,628,184; 4,669,448; 4,672,919; 4,808,356; 4,829,983; 4,861,968; 4,904,428; 5,000,893; 5,023,031; 5,052,346; 5,081,696; 5,092,519; 5,115,767; 5,199,385; 5,277,171; 5,372,185; 5,485,879; 5,574,822; 5,596,952; 5,660,165; 5,682,666; 5,761,379; 5,943,984; 5,954,492; 5,988,117; 6,142,216; 6,395,280; 6,684,821; 7,063,132; 7,007,748
Other U.S. and Foreign patent applications pending. Current Canadian Patents: 1,272,914; 1,280,043; 1,289,832; 2,045,862; 2,092,105; 2,107,012; 2,108,186; 2,112,515

Complete the following information and retain for future reference:

Model No:_____

Serial No:_____

Service Phone No.
Days:_____ Nights:_____

Address:_____

Supplier:_____

Supplier's Phone No:_____

DIAGNOSTICS FOR HONEYWELL CONTROL

LED Status	Control Status	Probable Cause
None (LED not on or flashing)	Millivolt power is not present. Light pilot.	1. Gas valve is functioning normally 2. Gas valve is not powered. Light pilot
One flash and three second pause.	If set point knob is in "PILOT" position then pilot flame is detected. **(no faults).**	Gas valve is powered and waiting for the set point knob to be turned to a water temperature setting. If the set point knob is at desired setting the thermostat is satisfied.
LED strobe (two quick flashes) and three second pause	Thermostat calling for heat **(no faults)**	Water heater operating normally.
LED on continuously.	Set point knob has been recently turned to the "OFF" position.	Set point knob was recently turned to "OFF" position. Wait until LED goes out before attempting to relight
Two flashes and three second pause.	Weak pilot flame detected. System will reset when pilot flame is sufficient.	1. Unstable pilot. 2. Pilot tube blocked or restricted.
Three flashes and three second pause.	Insufficient water heating. System will reset.	1. Temperature sensor out of calibration. 2. Possible short.
Four flashes and three second pause.	Excessive tank temperature. System must be reset.	1. Temperature sensor out of calibration. 2. Faulty gas valve.
Five flashes and three second pause.	Temperature sensor fault.	1. Damage to the temperature wire. 2. Temperature sensor resistance out of range. 3. Replace temperature sensor. 4. If temperature sensor replacement does not correct the problem; Verify control is not wet or physically damaged 5. Turn set point knob to "OFF" position. Turn set point knob to "PILOT" position and light pilot. 6. Replace gas valve if five flash error persists.

Diagnostics for Honeywell Control Continued-

LED Status	Control Status	Probable Cause
Six flashes and three second pause	Water leak detected by accessory module (some models).	1. Excessive amount of water in drain pan/water dam.
Seven flashes and three second pause.	Gas valve electronic fault detected.	1. Verify control is not wet or physically damaged. 2. Turn set point knob to "OFF" position. Turn set point knob to "PILOT" position and light pilot. 3. Replace gas valve if seven flash error persists.
Eight flashes and three second pause	False pilot flame present.	1. Pilot valve stuck in open position 2. Turn set point knob to "OFF" position. Turn set point knob to "PILOT" position and light pilot. 3. Replace gas valve if eight flash error persists.

DIRECT VENT WATER HEATER PARTS LIST

Note: Provide the part name, model and serial numbers of the water heater when ordering parts.

	PART NAME & DESCRIPTION
1.	Plenum
2.	Plenum Gasket
3.	Flue reducer
4.	Dip Tube & Nipple
5.	Anode Rod & Nipple
6.	Temperature-Pressure Relief Valve *(Certain Models)*
7.	Baffle
8.	Vertical Radshield
9.	Horizontal Radshield
10.	Chamber Assembly
11.	Jacket Base
12.	Air Intake Boot Gasket
13.	Air Intake Boot
14.	Inner Door Assembly
15.	Combination Gas Control w/ E.C.O.
16.	Piezo Ignitor Assembly
17.	Drain Valve
18.	Outer Door
19.	Pilot Assembly w/Electrode
20.	Gas Feed Line *(Burner)*
21.	Steel Burner
22.	Main Burner Orifice
23.	Air Intake Tube

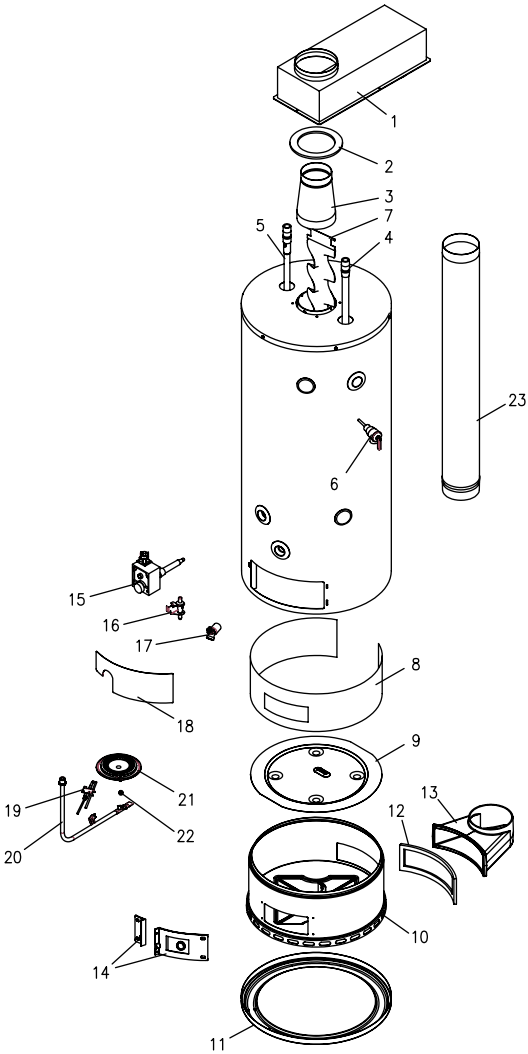

THE FOLLOWING INSTRUCTIONS ARE FOR INSTALLATION OF: GAS WATER HEATERS SUITABLE FOR WATER (POTABLE) HEATING AND SPACE HEATING

1. All piping components connected to this water heater for space heating applications must be suitable for use with potable water. In Massachusetts, space heating piping length **must not** exceed 50 feet.

2. Toxic chemicals, such as those used for boiler treatment, **must not** be introduced into potable water used for space heating.

3. This water heater **must not** be connected to an existing heating system or component(s) previously used with a non-potable water heating appliance.

4. When the system requires water for space heating at temperatures higher than required for other means, such as an ASSE approved mixing valve must be installed to temper the water for those uses in order to reduce the scald hazard potential.

   Please refer to the illustration below for suggested piping arrangement.

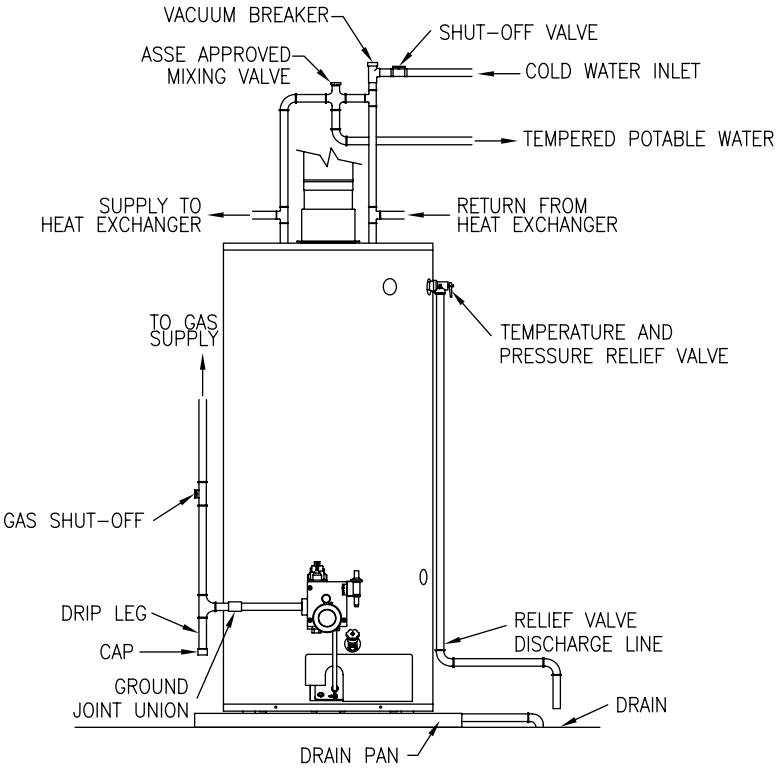

NOTES

NOTES