PEERLESS® PUREFIRE® REV 2

Gas Boilers

PF-50 PF-80 PF-110 PF-140 PF-210 PF-399

ENERGY STAR

As an ENERGY STAR® Partner, PB Heat, LLC has determined that this product meets the ENERGY STAR guidelines for energy efficiency.

Installation, Operation & Maintenance Manual

PeerlessBoilers.com

TABLE OF CONTENTS

USING THIS MANUAL 1
A. INSTALLATION SEQUENCE 1
B. SPECIAL ATTENTION BOXES 1

1. PREINSTALLATION 2
A. GENERAL 2
B. CODES & REGULATIONS 2
C. ACCESSIBILITY CLEARANCES 3
D. COMBUSTION & VENTILATION AIR 4
E. PLANNING THE LAYOUT 6

2. BOILER SET-UP 8
A. GENERAL 8
B. WALL MOUNTING 8
C. FLOOR STANDING INSTALLATION 8

3. VENTING & AIR INLET PIPING 9
A. GENERAL 9
B. APPROVED MATERIALS 9
C. EXHAUST VENT/AIR INTAKE PIPE LOCATION 9
D. EXHAUST VENT/AIR INTAKE PIPE SIZING . .14
E. EXHAUST VENT/AIR INTAKE PIPE INSTALLATION 14
F. EXHAUST TAPPING FOR VENT SAMPLE . .15
G. BOILER REMOVAL FROM COMMON VENTING SYSTEM 15

4. WATER PIPING AND CONTROLS 16
A. GENERAL 16
B. OPERATING PARAMETERS 16
C. SYSTEM COMPONENTS 16
D. SYSTEM PIPING 20
E. FREEZE PROTECTION 20
F. SPECIAL APPLICATIONS 26

5. FUEL PIPING 27
A. GENERAL 27
B. FUEL LINE SIZING 27
C. GAS SUPPLY PIPING – INSTALLATION 27
D. GAS SUPPLY PIPING – OPERATION 28
E. MAIN GAS VALVE – OPERATION 29

6. CONDENSATE DRAIN PIPING 30
A. GENERAL 30
B. CONDENSATE SYSTEM 30
C. CONDENSATE DRAIN PIPE MATERIAL 31
D. CONDENSATE DRAIN PIPE SIZING 31
E. CONDENSATE DRAIN PIPE INSTALLATION 31

7. ELECTRICAL CONNECTIONS 32
A. GENERAL 32
B. CUSTOMER CONNECTIONS 32
C. ZONE CIRCULATOR WIRING 33
D. INTERNAL WIRING 33

8. BOILER CONTROL: INTERNAL WIRING & OPERATION 37
A. CONTROL OVERVIEW 37
B. IGNITION SEQUENCE 39
C. BOILER CONTROL 41
D. CENTRAL HEATING 43
E. DOMESTIC HOT WATER (DHW) 46
F. SERVICE NOTIFICATION 47
G. SYSTEM TEST 48
H. STATUS & FAULT HISTORY 48
I. SENSOR RESISTANCE 49
J. MULTIPLE BOILERS 49
K. DEFAULTS 54

9. START-UP PROCEDURE 55
A. GENERAL 55
B. CHECK WATER PIPING 55
C. CHECK GAS PIPING 55
D. CHECK OPERATION 55
E. LIGHTING & OPERATING PROCEDURES . . .57

10. TROUBLESHOOTING 58
A. BLOCKING ERRORS 58
B. LOCKING ERRORS 58
C. ERROR MESSAGES IN A CASCADE SYSTEM 58
D. WARNING ERRORS 62

11. MAINTENANCE 64
A. GENERAL (WITH BOILER IN USE) 65
B. WEEKLY (WITH BOILER IN USE) 65
C. ANNUALLY (BEFORE START OF HEATING SEASON) 65
D. CONDENSATE CLEANING INSTRUCTIONS 65
E. COMBUSTION CHAMBER COIL CLEANING INSTRUCTIONS 66

12. BOILER DIMENSIONS & RATINGS 67

13. REPAIR PARTS 70

APPENDIX A. STATUS SCREENS 78

APPENDIX B. USER MENU 82

APPENDIX C. INSTALLER MENU 83

APPENDIX D. COMBUSTION TEST RECORD 88

USING THIS MANUAL

A. INSTALLATION SEQUENCE

Follow the installation instructions provided in this manual in the order shown. The order of these instructions has been set in order to provide the installer with a logical sequence of steps that will minimize potential interferences and maximize safety during boiler installation.

B. SPECIAL ATTENTION BOXES

Throughout this manual special attention boxes are provided to supplement the instructions and make special notice of potential hazards. The definition of each of these categories, in the judgement of PB Heat, LLC are as follows:

⚠ DANGER

Indicates a condition or hazard which will cause severe personal injury, death or major property damage.

⚠ WARNING

Indicates a condition or hazard which may cause severe personal injury, death or major property damage.

⚠ CAUTION

Indicates a condition or hazard which will or can cause minor personal injury or property damage.

⚠ NOTICE

Indicates special attention is needed, but not directly related to potential personal injury or property damage.

1. PREINSTALLATION

A. GENERAL

1. *PureFire®* boilers are supplied completely assembled as packaged boilers. The package should be inspected for damage upon receipt and any damage to the unit should be reported to the shipping company and wholesaler. This boiler should be stored in a clean, dry area.

2. Carefully read these instructions and be sure to understand the function of all connections prior to beginning installation. Contact your PB Heat, LLC Representative for help in answering questions.

3. This boiler must be installed by a qualified contractor. The boiler warranty may be voided if the boiler is not installed correctly.

4. A hot water boiler installed above radiation or as required by the Authority having jurisdiction, must be provided with a low water fuel cut-off device either as part of the boiler or at the time of installation.

B. CODES & REGULATIONS

1. Installation and repairs are to be performed in strict accordance with the requirements of state and local regulating agencies and codes dealing with boiler and gas appliance installation.

2. In the absence of local requirements the following should be followed:
   a. ASME Boiler and Pressure Vessel Code, Section IV - "Heating Boilers"

   b. ASME Boiler and Pressure Vessel Code, Section VI - "Recommended Rules for the Care and Operation of Heating Boilers"

⚠ WARNING

Liquefied Petroleum (LP) Gas or Propane is heavier than air and, in the event of a leak, may collect in low areas such as basements or floor drains. The gas may then ignite resulting in a fire or explosion.

   c. ANSI Z223.1/NFPA 54 - "National Fuel Gas Code"

   d. ANSI/NFPA 70 - "National Electrical Code"

   e. ANSI/NFPA 211 - "Chimneys, Fireplaces, Vents and Solid Fuel Burning Appliances"

3. Where required by the authority having jurisdiction, the installation must conform to the Standard for Controls and Safety Devices for Automatically Fired Boilers, ANSI/ASME CSD-1.

****Please read if installing in Massachusetts****
Massachusetts requires manufacturers of Side Wall Vented boilers to provide the following information from the Massachusetts code:

- A hard wired carbon monoxide detector with an alarm and battery back-up must be installed on the floor level where the gas equipment is to be installed AND on each additional level of the dwelling, building or structure served by the side wall horizontal vented gas fueled equipment.
- In the event that the side wall horizontally vented gas fueled equipment is installed in a crawl space or an attic, the hard wired carbon monoxide detector with alarm and battery back-up may be installed on the next adjacent floor level.
- Detector(s) must be installed by qualified licensed professionals.
- APPROVED CARBON MONOXIDE DETECTORS: Each carbon monoxide detector shall comply with NFPA 720 and be ANSI/UL 2034 listed and IAS certified.
- SIGNAGE: A metal or plastic identification plate shall be permanently mounted to the exterior of the building at a minimum height of eight (8) feet above grade directly in line with the exhaust vent terminal for the horizontally vented gas fueled heating appliance or equipment. The sign shall read, in print size no less than one-half (1/2) inch in size, **"GAS VENT DIRECTLY BELOW. KEEP CLEAR OF ALL OBSTRUCTIONS"**.
- EXEMPTIONS to the requirements listed above:
  - The above requirements do not apply if the exhaust vent termination is seven (7) feet or more above finished grade in the area of the venting, including but not limited to decks and porches.
  - The above requirements do not apply to a boiler installed in a room or structure separate from the dwelling, building or structure used in whole or in part for residential purposes.
- This boiler installation manual shall remain with the boiler at the completion of the installation.

See the latest edition of Massachusetts Code 248 CMR for complete verbage and also for additional (non-vent related) requirements (248 CMR is available online).

If your installation is NOT in Massachusetts, please see your authority of jurisdiction for requirements that may be in effect in your area. In the absence of such requirements, follow the *National Fuel Gas Code*, ANSI Z223.1/NFPA 54 and/or CAN/CSA B149.1, *Natural Gas and Propane Installation Code*.

C. ACCESSIBILITY CLEARANCES

1. The *PureFire*® boiler is certified for closet installations with zero clearance to combustible construction. In addition, it is design certified for use on combustible floors. Do not install on carpeting.

⚠ DANGER

DO NOT INSTALL ON CARPETING.

2. Figure 1.1 shows the minimum recommended clearances to allow reasonable access to the boiler for Models PF-50, PF-80, PF-110 and PF-140. For Models PF-210 & PF-399, Figure 1.2 shows the minimum recommended accessibility clearances. However, Local codes or special conditions may require greater clearances.

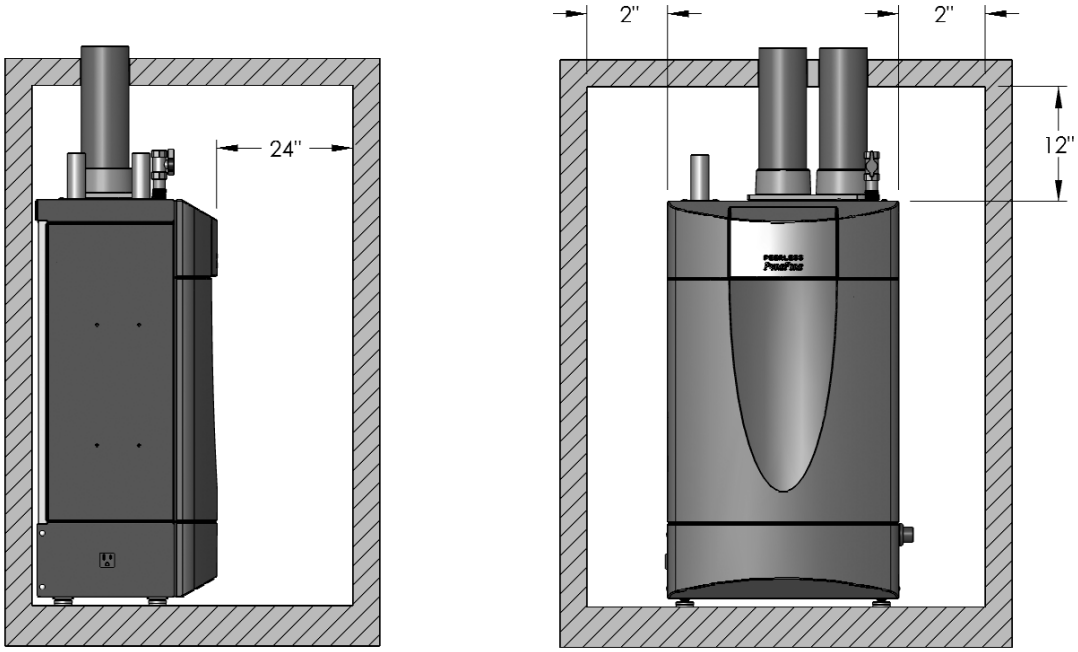

Figure 1.1: Minimum Accessibility Clearances – PF-50, PF-80, PF-110 & PF-140

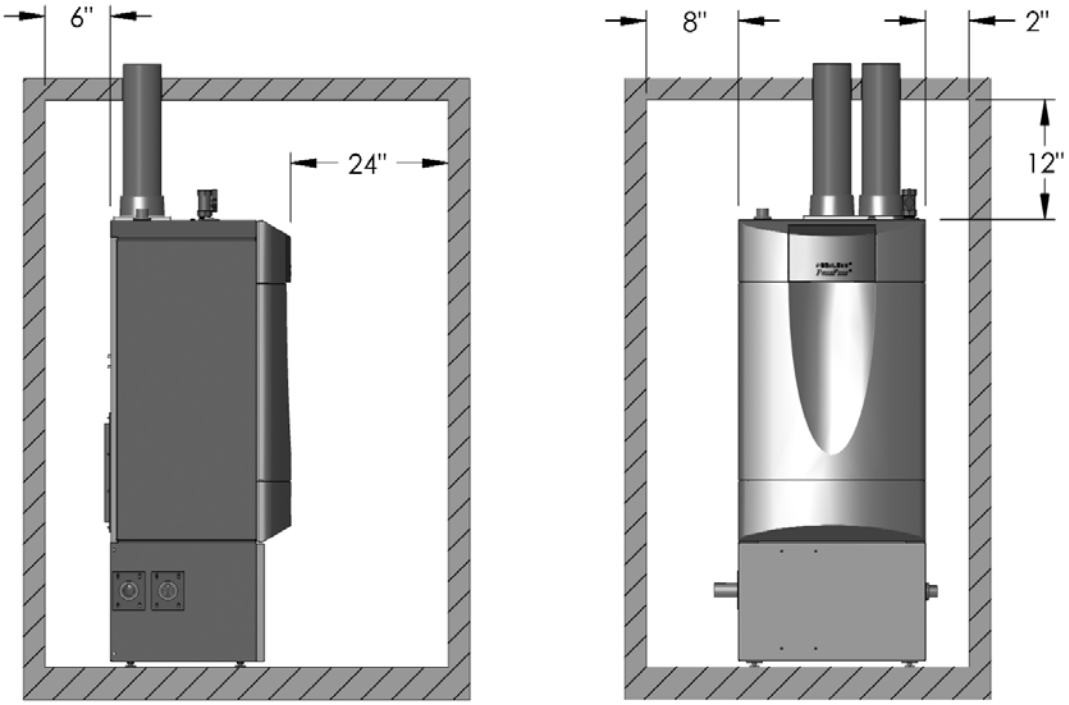

Figure 1.2: Minimum Accessibility Clearances – PF-210 & PF-399

D. COMBUSTION AND VENTILATION AIR

1. The *PureFire*® boiler is designed for operation with combustion air piped directly to the boiler from outside the building (sealed combustion). If the boiler is vented vertically, the combustion air can be supplied from within the building only if adequate combustion air and ventilation air is provided in accordance with the section of the *National Fuel Gas Code* entitled, "Air for Combustion and Ventilation" or applicable provisions of the local building code. Subsections 3 through 10 as follows are based on the *National Fuel Gas Code* requirements.

2. If the combustion air is piped directly to the boiler from outside the building, no additional combustion or ventilation air is required. Otherwise, follow the *National Fuel Gas Code* recommendations summarized in subsections 3 through 10.

3. *Required Combustion Air Volume*: The total required volume of indoor air is to be the sum of the required volumes for all appliances located within the space. Rooms communicating directly with the space in which the appliances are installed and through combustion air openings sized as indicated in Subsection 3 are considered part of the required volume. The required volume of indoor air is to be determined by one of two methods.
   a. Standard Method: The minimum required volume of indoor air (room volume) shall be 50 cubic feet per 1000 BTU/Hr (4.8 m3/kW). This method is to be used if the air infiltration rate is unknown or if the rate of air infiltration is known to be greater than 0.6 air changes per hour. As an option, this method may be used if the air infiltration rate is known to be between 0.6 and 0.4 air changes per hour. If the air infiltration rate is known to be below 0.4 then the *Known Air Infiltration Rate Method* must be used. If the building in which this appliance is to be installed is unusually tight, PB Heat recommends that the air infiltration rate be determined.
   b. Known Air Infiltration Rate Method:

$$\text{Required Volume}_{fan} = \frac{15\ \text{ft}^3}{\text{ACH}} \left(\frac{I_{fan}}{1000^{\text{Btu}/\text{hr}}} \right)$$

   where:
   I_{fan} = Input of the fan assisted appliances in Btu/hr
   ACH = air change per hour (percent of the volume of the space exchanged per hour, expressed as a decimal)

   Note: These calculations are not to be used for infiltration rates greater than 0.60 ACH.

4. *Indoor Air Opening Size and Location*: Openings connecting indoor spaces shall be sized and located as follows:
   a. Combining Spaces on the Same Floor: Provide two permanent openings communicating with additional spaces that have a minimum free area of 1 in^2 per 1000 Btu/hr (22 cm^2 per 1000 W) of the total input rating of all gas fired equipment but not less than 100 in^2 (645 cm^2). One opening is to begin within 12 inches (305 mm) from the top of the space and the other is to begin within 12 inches (305 mm) from the floor. The minimum dimension of either of these openings shall be 3 inches (76 mm). See Figure 1.3 for an illustration of this arrangement.

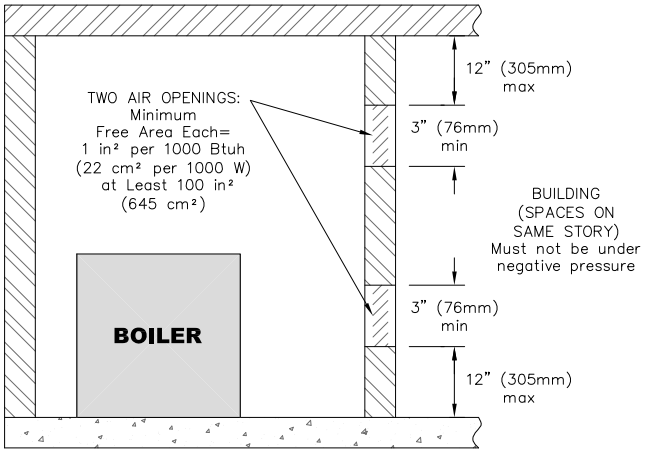

Figure 1.3: Air Openings – All Air from Indoors on the Same Floor

   b. Combining Spaces on Different Floors: Provide one or more permanent openings communicating with additional spaces that have a total minimum free area of 2 in^2 per 1000 Btu/hr (44 cm^2 per 1000 W) of total input rating of all equipment. See Figure 1.4 for an illustration of this arrangement.

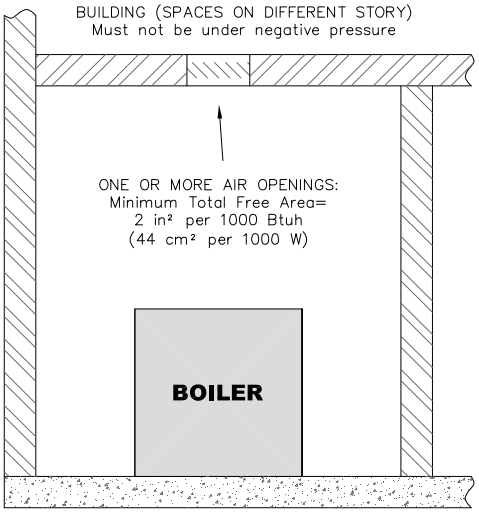

Figure 1.4: Air Openings – All Air from Indoors on Different Floors

5. *Outdoor Combustion Air*: Outdoor combustion air is to be provided through one or two permanent openings. The minimum dimension of these air openings is 3 inches (76 mm).
   a. *Two Permanent Opening Method*: Provide two permanent openings. One opening is to begin within 12 inches (305 mm) of the top of the space and the other is to begin within 12 inches (305 mm) of the floor. The openings are to communicate directly or by ducts with the outdoors or with spaces that freely communicate with the outdoors. The size of the openings shall be determined as follows:
      i. Where communicating directly or through vertical ducts with the outdoors each opening shall have a minimum free area of 1 in^2 per 4000 Btu/hr (22 cm^2 per 4000 W) of total input rating for all equipment in the space. See Figure 1.5 for openings directly communicating with the outdoors or Figure 1.6 for openings connected by ducts to the outdoors.

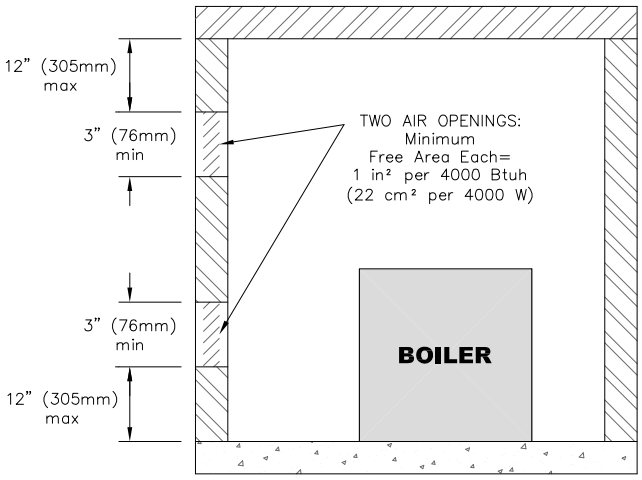

Figure 1.5: Air Openings – All Air Directly from Outdoors

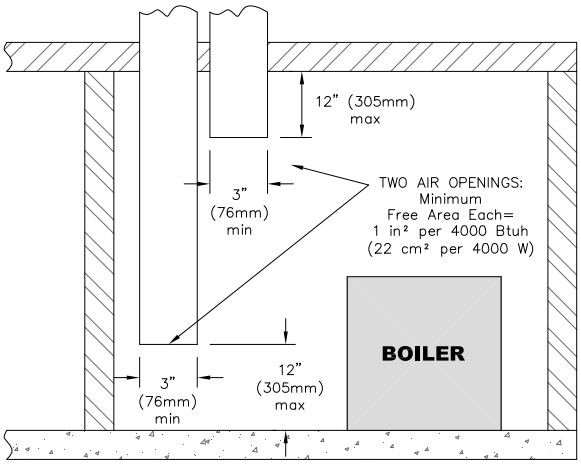

Figure 1.6: Air Openings – All Air from Outdoors through Vertical Ducts

      ii. Where communicating with the outdoors through horizontal ducts, each opening shall have a minimum free area of 1 in^2 per 2000 Btu/hr (22 cm^2 per 2000 W) of total rated input for all appliances in the space. See Figure 1.7.

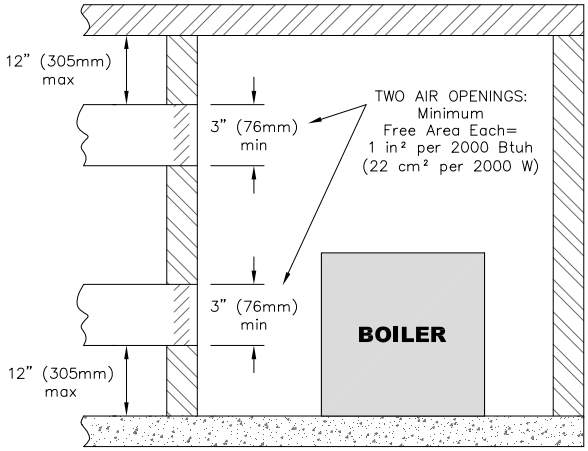

Figure 1.7: Air Openings – All Air from Outdoors through Horizontal Ducts

   b. *One Permanent Opening Method*: Provide one permanent opening beginning within 12 inches (305 mm) of the top of the space. The opening shall communicate directly with the outdoors, communicate through a vertical or horizontal duct, or communicate with a space that freely communicates with the outdoors. The opening shall have a minimum free area of 1 in^2 per 3000 Btu/hr of total rated input for all appliances in the space and not less than the sum of the cross-sectional areas of all vent connectors in the space. The gas-fired equipment shall have clearances of at least 1 inch (25 mm) from the sides and back and 6 inches (150 mm) from the front of the appliance. See Figure 1.8 for this arrangement.

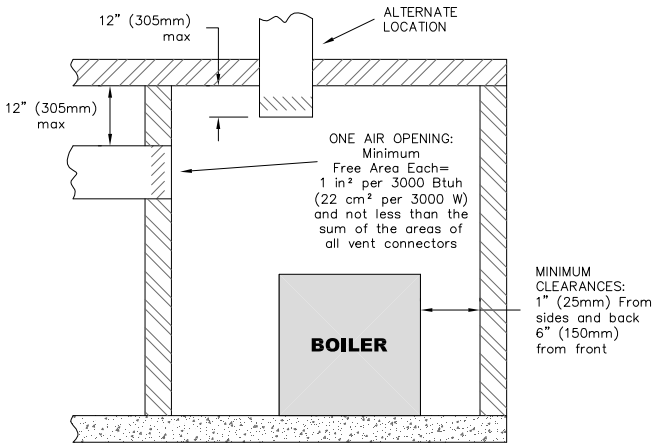

Figure 1.8: Air Openings – All Air from Outdoors through One Opening

6. *Combination Indoor and Outdoor Combustion Air*: If the required volume of indoor air exceeds the available indoor air volume, outdoor air openings or ducts may be used to supplement the available indoor air provided:
   a. The size and location of the indoor openings comply with Subsection 3.
   b. The outdoor openings are to be located in accordance with Subsection 4.
   c. The size of the outdoor openings are to be sized as follows:

$$A_{req} = A_{full} \ x \left(1 - \frac{V_{avail}}{V_{req}}\right)$$

where:
A_{req} = minimum area of outdoor openings.
A_{full} = full size of outdoor openings calculated in accordance with Subsection 4.
V_{avail} = available indoor air volume
V_{req} = required indoor air volume

7. *Engineered Installations*: Engineered combustion air installations shall provide an adequate supply of combustion, ventilation, and dilution air and shall be approved by the authority having jurisdiction.

8. *Mechanical Combustion Air Supply*:
   a. In installations where all combustion air is provided by a mechanical air supply system, the combustion air shall be supplied from the outdoors at the minimum rate of 0.35 ft^3/min per 1000 Btu/hr (0.034 m^3/min per 1000 W) of the total rated input of all appliances in the space.
   b. In installations where exhaust fans are installed, additional air shall be provided to replace the exhaust air.
   c. Each of the appliances served shall be interlocked to the mechanical air supply to prevent main burner operation when the mechanical air supply system is not in operation.
   d. In buildings where the combustion air is provided by the mechanical ventilation system, the system shall provide the specified combustion air rate in addition to the required ventilation air.

9. *Louvers & Grills*:
   a. The required size of openings for combustion, ventilation, and dilution air shall be based on the net free area of each opening.
      i. Where the free area through a louver or grille is known, it shall be used in calculating the opening size required to provide the free area specified.
      ii. Where the free area through a louver or grille is not known, it shall be assumed that wooden louvers will have 25% free area and metal louvers and grilles will have 75% free area.
      iii. Non-motorized dampers shall be fixed in the open position.
   b. Motorized dampers shall be interlocked with the equipment so that they are proven in the full open position prior to ignition and during operation of the main burner.
      i. The interlock shall prevent the main burner from igniting if the damper fails to open during burner startup.
      ii. The interlock shall shut down the burner if the damper closes during burner operation.

10. *Combustion Air Ducts*:
   a. Ducts shall be constructed of galvanized steel or an equivalent corrosion- resistant material.
   b. Ducts shall terminate in an unobstructed space, allowing free movement of combustion air to the appliances.
   c. Ducts shall serve a single space.
   d. Ducts shall not serve both upper and lower combustion air openings where both such openings are used. The separation between ducts serving upper and lower combustion air openings shall be maintained to the source of combustion air.
   e. Ducts shall not be screened where terminating in an attic space.
   f. Horizontal upper combustion air ducts shall not slope downward toward the source of the combustion air.
   g. Combustion air intake openings located on the exterior of buildings shall have the lowest side of the combustion air intake opening at least 12 inches (305 mm) above grade.

11. Refer to Section 3 of this manual, Venting & Air Inlet Piping, for specific instructions for piping the exhaust and combustion air.

E. PLANNING THE LAYOUTS

1. Prepare sketches and notes showing the layout of the boiler installation to minimize the possibility of interferences with new or existing equipment, piping, venting and wiring.

2. The following sections of this manual should be reviewed for consideration of limitations with respect to:
   a. Venting and Air Inlet Piping: Section 3
   b. Water Piping: Section 4
   c. Fuel Piping: Section 5
   d. Condensate Removal: Section 6
   e. Electrical Connections: Section 7
   f. Boiler Control: Section 8
   g. Boiler Dimensions and Ratings: Section 12

⚠ WARNING

This boiler is certified as an indoor appliance. Do not install this boiler outdoors or locate where it will be exposed to freezing temperatures.

⚠ WARNING

Do not install this boiler where gasoline or other flammable liquids or vapors are stored or are in use.

⚠ WARNING

Do not install this boiler in the attic.

2. BOILER SET-UP

A. GENERAL

1. *PureFire*® boilers are intended for installation in an area with a floor drain or in a suitable drain pan. Do not install any boiler where leaks or relief valve discharge will cause property damage.

2. The *PureFire*® boiler is not intended to support external piping. All venting and other piping should be supported independently of the boiler.

3. Install the boiler level to prevent condensate from backing up inside the boiler.

⚠ CAUTION

This boiler must be installed level to prevent condensate from backing up inside the boiler.

4. *PureFire*® boilers can be wall mounted or floor standing. The following instructions provide guidance for both configurations.

B. WALL MOUNTING

1. Models PF-50, PF-80, PF-110 and PF-140:
   a. A wall mounting bracket kit (54171) is included for wall mounting these boiler sizes.
   b. Mount the bracket level on the wall using 5/16" lag bolts. Be sure the lag bolts are fully supported by wall studs or adequate wall structure.
   c. The mounting bracket has (4) holes on 16" centers as shown in Figure 2.1. This is intended to give installers the ability to mount the bracket on two wall studs spaced at this interval. If existing wall studs are spaced differently or if the desired location is not in line with the wall studs, additional support is required.
   d. If the boiler is wall mounted using the optional wall bracket, be sure that the wall provides adequate support for the boiler.

⚠ WARNING

Make sure the boiler wall bracket is adequately supported. Do not install this bracket on dry wall unless adequately supported by wall studs.

   e. Be sure to adequately support the boiler while installing external piping or other connections.

⚠ WARNING

The wall mounting bracket is designed to support the boiler. External piping for water, venting, air intake and fuel supply is to be supported separately

   f. Be sure that condensate piping is routed to a suitable drain or condensate pump.

2. All Models can be wall mounted by using the optional stand (91400).
   a. Use the leveling feet provided with the boiler to assure proper level.
   b. Be sure to leave adequate provisions for condensate piping and/or a pump (if required).

C. FLOOR STANDING INSTALLATION

1. For floor standing installations, use the leveling feet to assure that the boiler is completely level. This will prevent condensate from backing up in the boiler.

2. Be sure to leave adequate space for condensate piping or a pump if required.

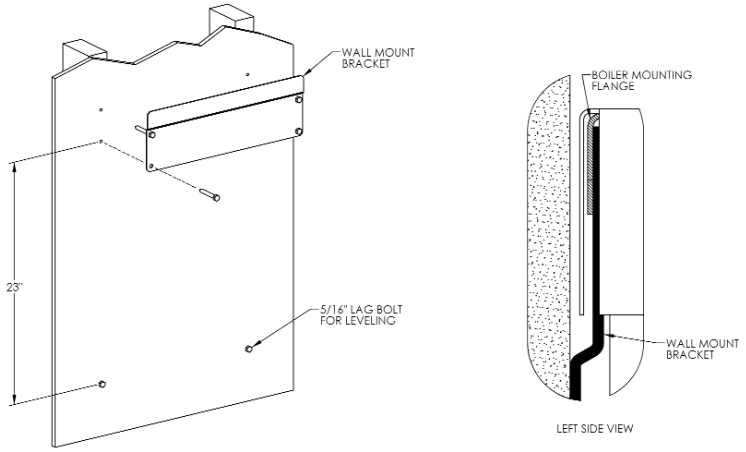

Figure 2.1: Optional Wall Mounting Bracket for PF-50, PF-80, PF-110 and PF-140 Boilers

3. VENTING & AIR INLET PIPING

A. GENERAL

1. Install the *PureFire*® boiler venting system in accordance with these instructions and with the National Fuel Gas Code, ANSI Z223.1/NFPA 54, CAN/CGA B149, and/or applicable provisions of local building codes.

2. The *PureFire*® boiler is a direct vent appliance and is ETL Listed as a Category IV appliance with Intertek Testing Laboratories, Inc.

⚠ WARNING

The venting system for this product is to be installed in strict accordance with these venting instructions. Failure to install the vent system properly may result in severe personal injury, death or major property damage.

⚠ WARNING

This vent system operates under positive pressure. Vent connectors serving appliances vented by natural draft shall not be connected into any portion of this venting system. Failure to comply may result in serious injury, death or major property damage.

B. APPROVED MATERIALS

1. Table 3.1 lists approved materials for vent pipe (and adhesives where applicable). Use only these materials for exhaust vent piping.

2. PVC pipe and fittings are not to be used for venting in confined spaces such as closet installations. Use only CPVC or Mugro™ vent pipe under these conditions.

3. Cellular core piping is approved for inlet air piping only.

⚠ WARNING

Only the materials listed below are approved for use with the *PureFire*® boiler. Use only these components in accordance with these instructions. Failure to use the correct material may result in serious injury, death, or major property damage.

Table 3.1: Approved Materials for Exhaust Vent Pipe

Description	Material	Conforming to Standard
Vent Piping & Fittings	PVC (Sch 40 or 80)*	ANSI/ASTM D1785
	CPVC (Sch 40 or 80)	ANSI/ASTM D1785
	PVC-DWV*	ANSI/ASTM D2665
	FasNSeal	UL1738 & ULC-S636
	MUGRO™ PP(s)	ULC-S636
	InnoFlue® PP	ULC-S636
Pipe Cement (PVC & CPVC Only)	PVC/CPVC Cement	ANSI/ASTM D2564

* PVC pipe/fittings are not to be used for venting within confined spaces.

Notice: Installations in Canada require compliance with ULC S636 - Standard for Type BH Gas Venting Systems.

⚠ WARNING

Use of cellular core pipe for any exhaust vent component is prohibited. Use of cellular core pipe may result in severe personal injury, death, or major property damage.

C. EXHAUST VENT/AIR INTAKE PIPE LOCATION

1. Install vent piping before installing water, fuel, or condensate piping. Working from largest to smallest diameter reduces the complexity of piping interferences.

2. Vent and air intake piping is to be installed so that there is sufficient access for routine inspection as required in Section 11, of this manual.

3. The vent piping for this boiler is approved for zero clearance to combustible construction. However, a fire stop must be used where the vent pipe penetrates walls or ceilings.

4. The Peerless® *PureFire*® boiler, like all high efficiency, gas-fired appliances, is likely to produce a vapor plume due to condensation. Surfaces near the vent termination will likely become coated with condensation.

5. The maximum combined vent and air inlet vent length for the Peerless® *PureFire*® boiler is about 200 equivalent feet (60 m).Be sure that the boiler is located such that the maximum vent length is not exceeded.

⚠ NOTICE

If the maximum equivalent vent length is exceeded, the maximum burner input rate may be reduced.

6. Air Intake Pipe Location – Sidewall Venting:
   a. Provide 1 foot (30 cm) clearance from the bottom of the air intake pipe to the level of maximum snow accumulation. Snow removal may be necessary to maintain clearances.
   b. Do not locate air intake pipe in a parking area where machinery may damage the pipe.

⚠ NOTICE

Locating air intake and exhaust pipes on different sides of a building can cause erratic operation due to wind gusts. When using the sidewall venting configuration always locate both terminations on the same outside wall.

c. If the vent pipe and air inlet pipe terminations penetrate the wall at the same level the minimum distance between them is 8" center-to-center.

d. For multiple boiler installations, the minimum horizontal distance between the inlet of one boiler to the exhaust of an adjacent boiler is 8" center-to-center. In addition, the minimum vertical distance between the exhaust and air inlet is 6". See Figure 3.1 for an illustration.

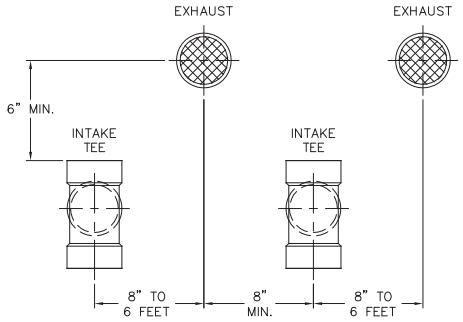

Figure 3.1: Vent Pipe Spacing for Multiple *PureFire*® Boilers

e. The exhaust outlet of the vent pipe should not be angled any more than 5° from horizontal.

f. Precautions should be taken to prevent recirculation of flue gases to the air inlet pipe of the boiler or other adjacent appliances.

7. Sidewall Venting Configuration:

a. See Figure 3.2 for an illustration of clearances for location of exit terminals of direct-vent venting systems.

- This boiler vent system shall terminate at least 3 feet (0.9 m) above any forced air inlet located within 10 ft (3 m). Note: This does not apply to the combustion air intake of a direct-vent appliance.
- Provide a minimum of 1 foot (30 cm) distance from any door, operable window, or gravity intake into any building.
- Provide a minimum of 1 foot (30 cm) clearance from the bottom of the exit terminal above the expected snow accumulation level. Snow removal may be required to maintain clearance.
- Provide a minimum of 4 feet (1.22 m) horizontal clearance from electrical meters, gas meters, gas regulators, and relief equipment. In no case shall the exit terminal be above or below the aforementioned equipment unless the 4 foot horizontal distance is maintained.
- Do not locate the exhaust exit terminal over public walkways where condensate could drip and create a hazard or nuisance.
- When adjacent to public walkways, locate the exit terminal at least 7 feet above grade.
- Do not locate the exhaust termination directly under roof overhangs to prevent icicles from forming or recirculation of exhaust gases from occurring.

⚠ CAUTION

Condensing flue gases can freeze on exterior building surfaces which may cause discoloration and degradation of the surfaces.

- Provide 3 feet clearance from the inside corner of adjacent walls.

b. Figures 3.3 through 3.6 show approved sidewall venting configurations using the standard fittings supplied.

c. Figure 3.4 is only approved for locations in which the outdoor temperature is above -5°F (-21°C) in accordance with ASHRAE 90A-1980 recommendations.

d. Figures 3.7 and 3.8 show approved sidewall vent configurations using optional vent termination kits.

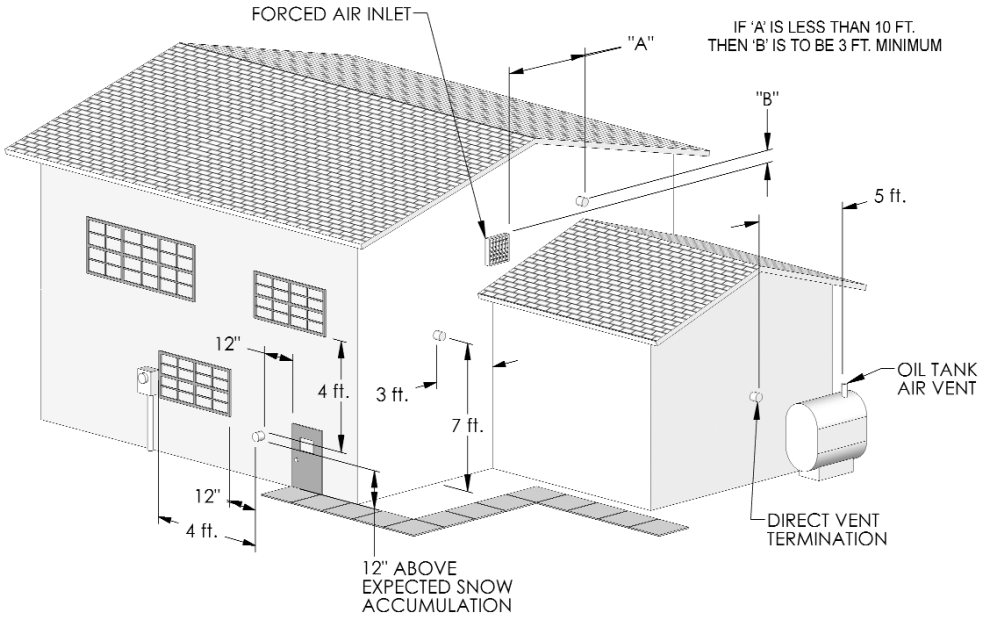

Figure 3.2: Exit Terminal Location for Mechanical Draft and Direct-Vent Venting Systems

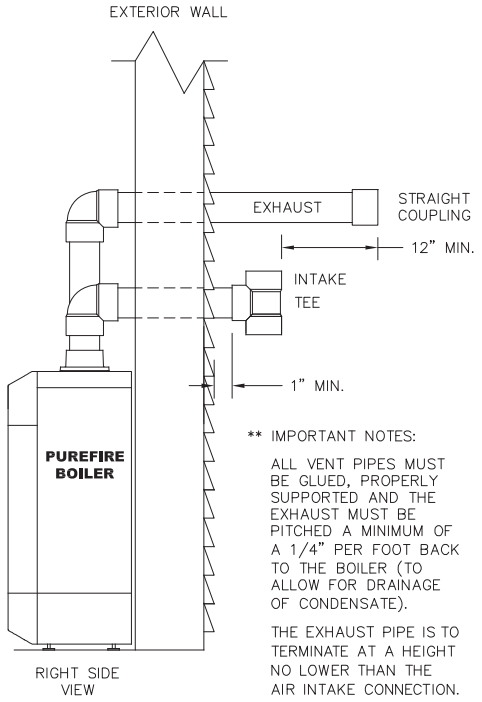

Figure 3.3: Standard Exhaust and Air Inlet Pipe Penetrations

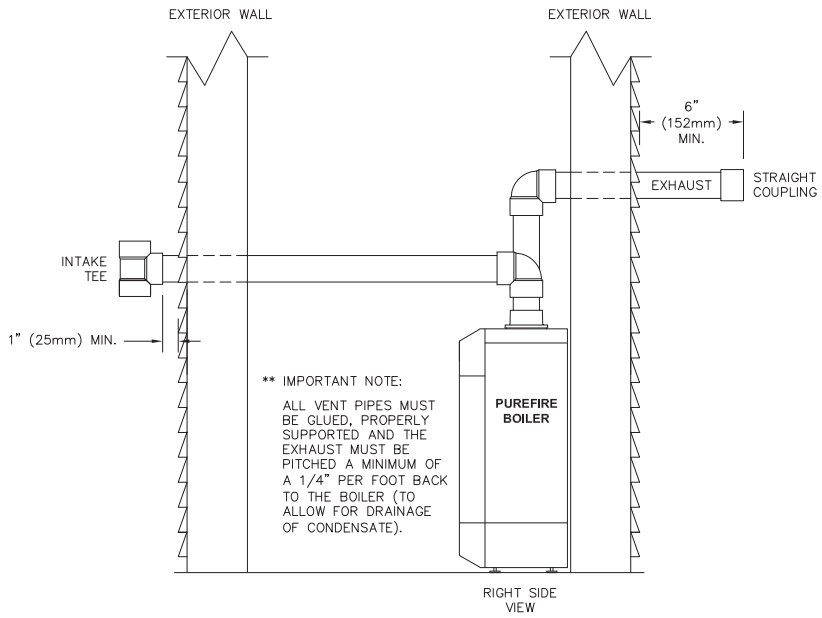

Figure 3.5: Exhaust and Air Inlet on Opposite Walls

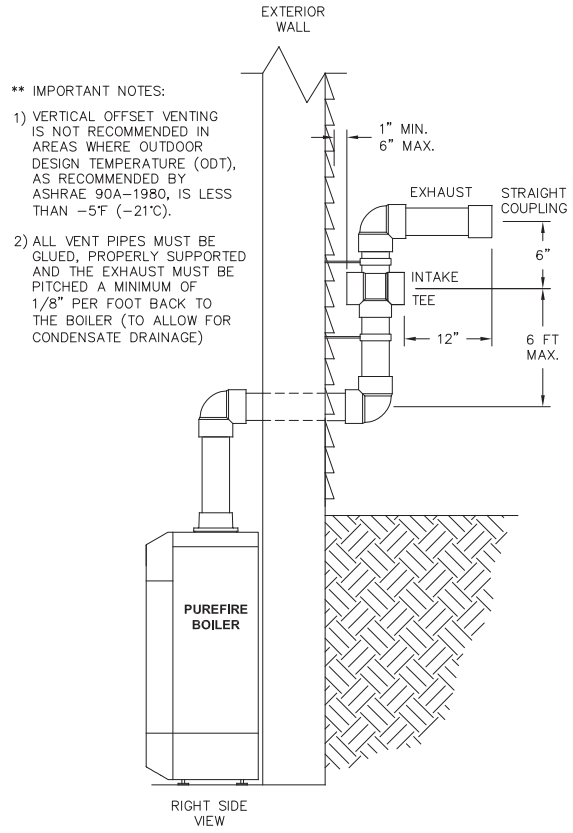

Figure 3.4: Offset Exhaust and Air Inlet Terminations

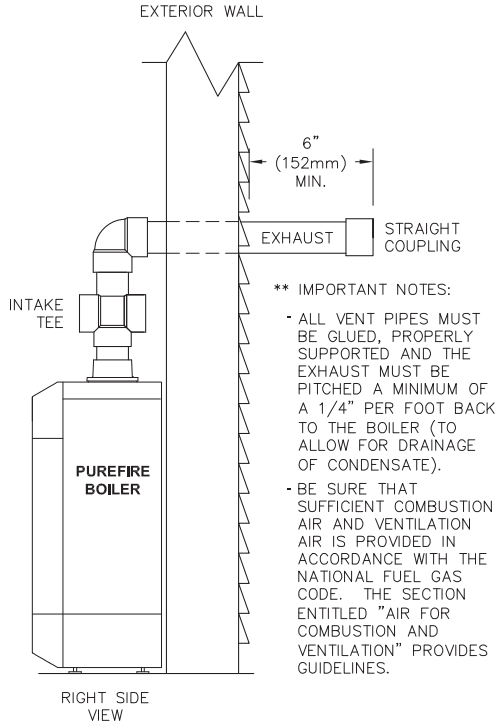

Figure 3.6: Sidewall Exhaust with Indoor Air

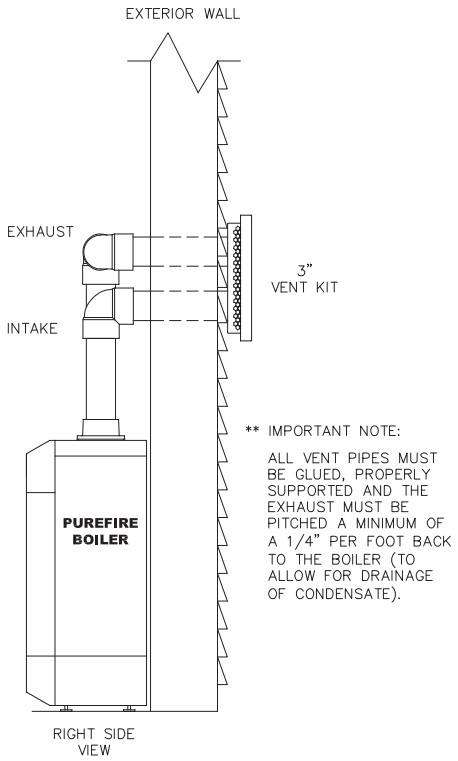

Figure 3.7: Optional Stainless Steel Vent Kit Installation

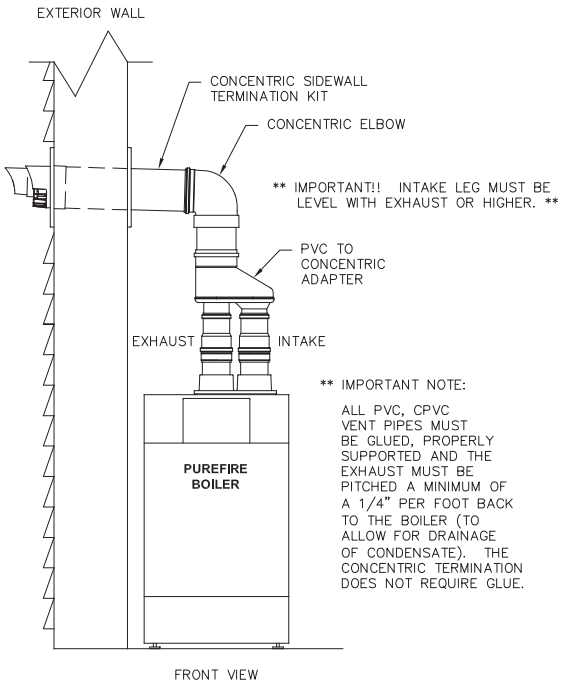

Figure 3.8: Optional Concentric PVC Vent Kit Installation

8. Vertical Venting Configuration:
   a. Figure 3.9 shows the approved venting configuration for vertical venting using the standard fittings supplied.

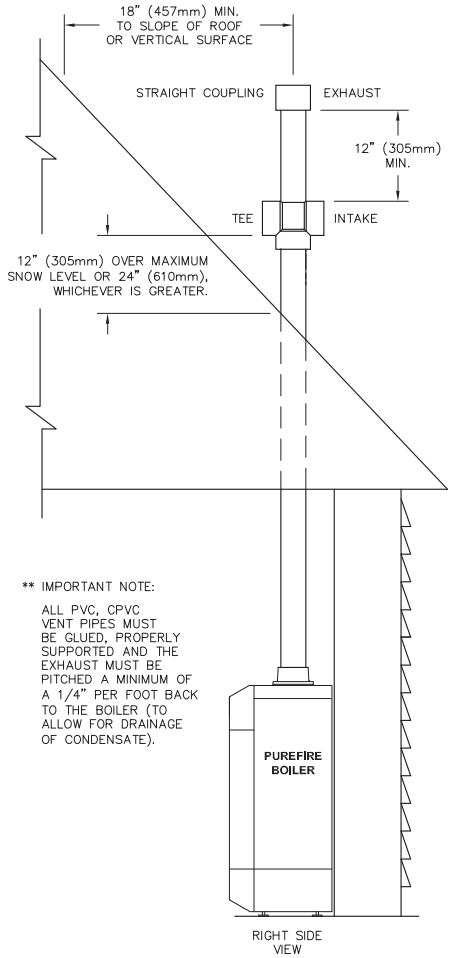

Figure 3.9: Standard Vertical Vent Installation

   b. Locate the air intake pipe inlet 12" above the expected snow accumulation on the roof surface or 24" above the roof surface, whichever is greater.
   c. Locate the end of the exhaust vent pipe a minimum of 12" above the inlet to the air intake pipe.
   d. Figure 3.10 shows an approved vertical vent configuration using the optional concentric vent termination kit.
   e. Figure 3.11 shows an option for routing the exhaust and air inlet piping through an unused chimney.
   f. Figure 3.12 shows this option using inlet air from a sidewall position.
   g. Figure 3.13 shows an option for routing the exhaust through an unused chimney with the combustion air supplied from inside the building. Be sure to note the requirements for combustion air as listed under Section 1.D. "Combustion and Ventilation Air". These requirements are in accordance with the National Fuel Gas Code.

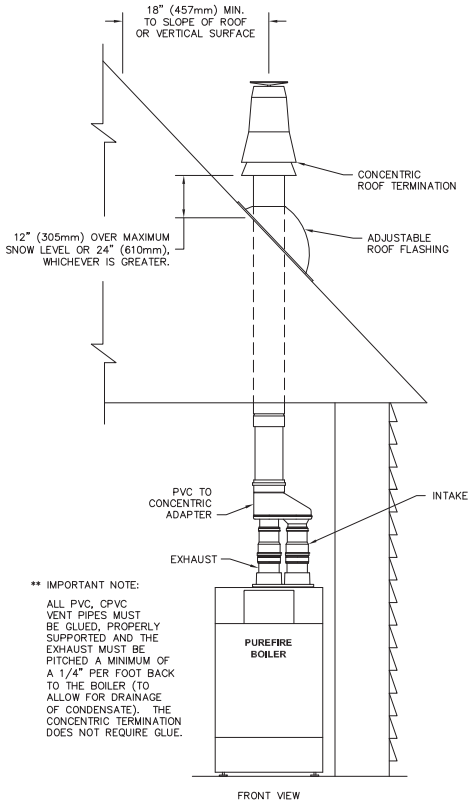

Figure 3.10: Concentric PVC Vertical Vent Installation

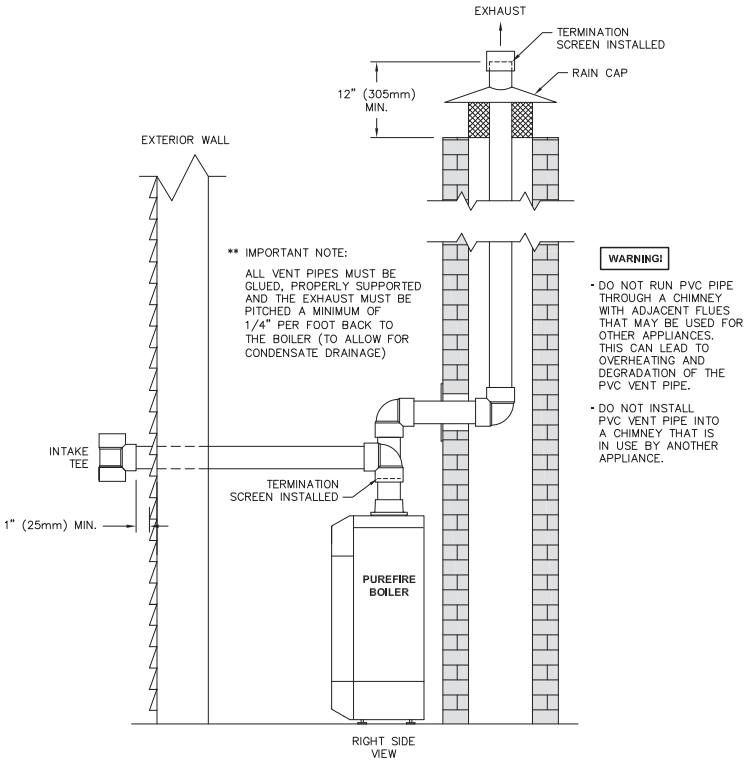

Figure 3.12: Venting Through a Chimney Using Sidewall Outside Air

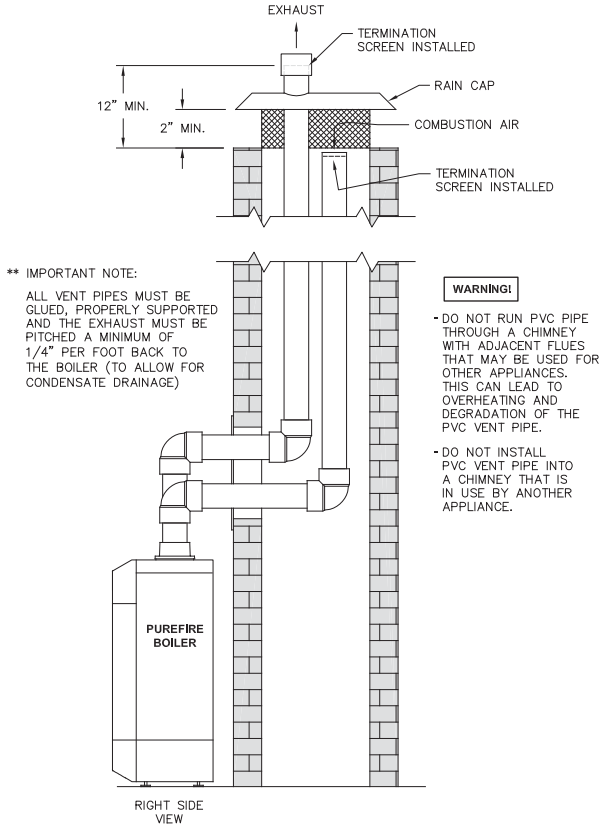

Figure 3.11: Venting Through a Chimney Using Outside Air

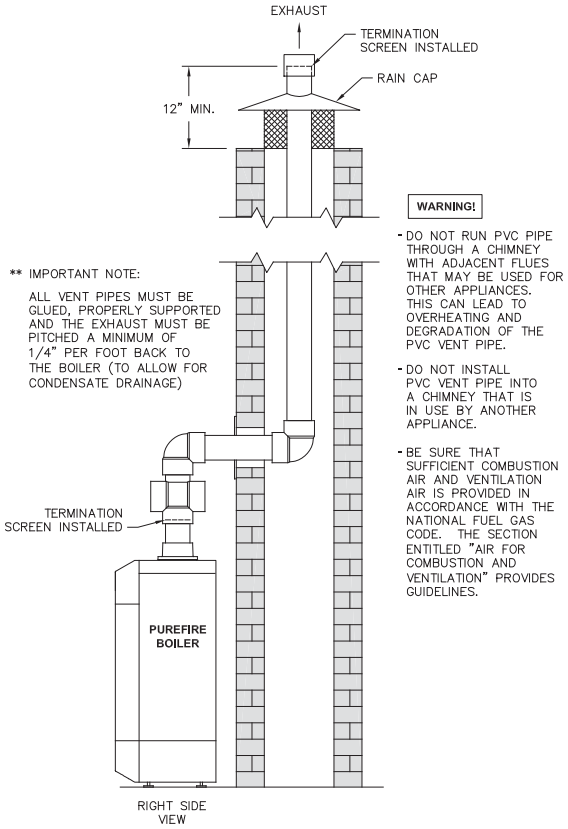

Figure 3.13: Venting with a Chimney Using Inside Air

D. EXHAUST VENT/AIR INTAKE PIPE SIZING

1. Table 3.2 shows Exhaust Vent/Air Intake Sizes for *PureFire*® boilers.

Table 3.2: Exhaust Vent/Air Intake Sizing

Boiler Model	Exhaust Vent/Air Intake Size
PF-50	3" (80 mm)
PF-80	3" (80 mm)
PF-110	3" (80 mm)
PF-140	3" (80 mm)
PF-210	3" (80 mm)
PF-399	4" (100 mm)

2. Concentric polypropylene venting systems can be installed using optional MUGRO™ vent adapters. Table 3.3 shows the appropriate Stock Codes.

Table 3.3: MUGRO™ Concentric Vent Adapter Stock Codes

Boiler Model	Stock Code	Boiler Model	Stock Code
PF-50	54155	PF-140	54155
PF-80	54155	PF-210	54236
PF-110	54155	PF-399	54237

Contact your PB Heat, LLC Representative for more information on this option.

3. Combined systems using PVC which transitions to concentric polypropylene can also be installed. See figure 3.6 and 3.9 for an illustration of the configuration. Table 3.6 provides part numbers for the concentric components.

4. The total combined length of exhaust vent and air intake piping is 200 equivalent feet (60 m).
   a. The equivalent length of elbows, tees and other fittings are listed in Table 3.4.

Table 3.4: Equivalent Length of Fittings

Fitting Description	Equivalent Length
Elbow, 90° Short Radius	5 feet
Elbow, 90° Long Radius	4 feet
Elbow, 45° Short Radius	3 feet
Coupling	0 feet
Air Intake Tee	0 feet
Stainless Steel Vent Kit	1 foot
Concentric Vent Kit	3 feet

   b. The equivalent length can be calculated as follows.

Table 3.5: Sample Equivalent Length Calculation

	Exhaust	Air Inlet	Total
Straight Length of Pipe	50'	50'	100'
90° Elbows, SR	2 x 5'= 10'	1 x 5' = 5'	15'
45° Elbows, SR		2 x 3' = 6'	6'
Conc. Vent Termination	1 x 3' = 3'		3'
	Total		124'

⚠ NOTICE

Exhaust Vent/Air Intake length in excess of 200 equivalent feet may result in reduced input due to excessive pressure drop.

This is well below the 200 feet maximum equivalent length. If the total is above 200 equivalent feet, alternate boiler locations or exhaust penetration location should be considered.

E. EXHAUST VENT/AIR INTAKE INSTALLATION

1. Figures 12.1 & 12.2 show the exhaust connection on top of the boiler, near the rear in the center.
   a. The exhaust connection for PF-50, PF-80, PF- 110 & PF-140 boilers is a 3" CPVC Female Pipe Adapter.
   b. The exhaust connections for the PF-210 (3") and PF-399 (4") are male CPVC pipe.
   c. These connections are to be joined with suitable PVC/CPVC adhesives in accordance with manufacturers' instructions.

2. The Air Intake connection is to the right of the exhaust.

3. Both connections are clearly marked.

4. Remove all burrs and debris from the joints and fittings.

⚠ WARNING

This appliance uses a positive pressure venting system. All joints must be sealed completely to prevent leakage of flue products into living spaces. Failure to do this may result in severe personal injury, death or major property damage.

5. Horizontal lengths of exhaust vent must be installed with a slope of not less than 1/4" per foot (21 mm per meter) toward the boiler to allow condensate to drain from the vent pipe. If the vent pipe must be piped around an obstacle that causes a low point in the piping, a drain with an appropriate trap must be installed.

6. All piping must be fully supported. Use pipe hangers at a minimum of 4 foot (1.22 meter) intervals to prevent sagging of the pipe.

7. Exhaust and air inlet piping is to be supported separately and should not apply force to the boiler.

8. Penetration openings around the vent pipe and air intake piping are to be fully sealed to prevent exhaust gases from entering building structures.

9. PVC & CPVC Piping:
   a. Use only solid PVC or CPVC Schedule 40 or 80 pipe for exhaust venting. Cellular core PVC or CPVC is not approved for exhaust vent.
   b. All joints in vent pipe, fittings, attachment to the boiler stub, and all vent termination joints must be properly cleaned, primed and cemented. Use only cement and primer approved for use with PVC or CPVC pipe that conforms to ANSI/ASTM D2564.
   c. A straight coupling is provided with the boiler to be used as an outside vent termination. One of the two screens is to be installed to prevent birds or rodents from entering.
   d. An air intake tee is provided with the boiler to be used as an outside air intake termination. A screen is to be installed to prevent birds or rodents from entering.

e. The following are optional combination air intake/exhaust terminations that are available separately from your PB Heat, LLC distributor for use with *PureFire*® boilers.

Table 3.6: Vent Termination Kits

Model	Description	Stock Code
PF-50, PF-80, PF-110, PF-140, PF-210	80/125 Concentric Sidewall Termination Kit	54396
	80/125 Concentric Roof Termination Kit	54398
	80/125 Concentric 90° Elbow	54085
	3" PVC to 80/125 Concentric Adapter	54296
PF-399	100/150 Concentric Sidewall Termination Kit	54397
	100/150 Concentric Roof Termination Kit	54399
	100/150 Concentric 90° Elbow	54435
	4" PVC to 100/150 Concentric Adapter	54297

f. Refer to Figures 3.3 through 3.6 for sidewall venting options using PVC or CPVC pipe.

g. Refer to Figures 3.7 & 3.8 for vertical venting options using PVC or CPVC pipe.

F. EXHAUST TAPPING FOR VENT SAMPLE

To properly install the boiler, carbon dioxide (CO_2) and carbon monoxide (CO) readings are to be determined from a sample of combustion gases from the vent pipe.

To do this, a hole must be drilled in the vent pipe.

a. Drill a 21/64" diameter hole in the exhaust vent pipe at a point between 6" and 12" from the boiler connection.

b. Tap the hole with a 1/8" NPT pipe tap.

c. Use a 1/8" NPT, PVC or Teflon Pipe Plug to seal the hole.

See Section 9.D.7 for instructions on taking combustion readings.

G. BOILER REMOVAL FROM COMMON VENTING SYSTEM

If removing an existing boiler from a common vent system the following steps must be carried out for each appliance that remains connected. These steps are to be completed for each appliance while the other appliances that remain connected are not in operation.

1. Seal any unused openings in the common venting system.

2. Visually inspect the venting system for proper size and horizontal pitch. Verify that there is no blockage or restriction, leakage, corrosion, and other deficiencies which could cause an unsafe condition.

3. Where practical, close all building doors and windows. This includes interior doors between the space in which the appliances remaining connected to the common venting system are located and other interior spaces in the building.

4. Turn on clothes dryers and any other appliance not connected to the common venting system. Exhaust fans such as range hoods or bathroom exhaust fans are to be operated at their maximum speed (do not operate a summer exhaust fan).

5. Close fireplace dampers.

6. Place the appliance that is being inspected in operation. Follow the lighting instructions and adjust the thermostat so that the appliance will operate continuously.

7. Test for spillage at the draft hood relief opening after 5 minutes of main burner operation. Use the flame from a match or candle, or smoke from a cigarette, cigar, or pipe.

8. After each appliance remaining connected to the common vent system has been determined to vent properly as outlined above, doors, windows, exhaust fans, fireplace dampers and any other gas burning appliance are to be returned to their previous condition of use.

9. Any improper operation of the common venting system should be corrected at once so that the installation conforms with the National Fuel Gas Code, ANSI Z223.1/NFPA 54 and/or CAN/CGA B149 Natural Gas and Propane Installation Code.

10. When resizing any portion of the common venting system, it the system should be resized to approach the minimum size as determined using the appropriate tables in Part 11 of the National Fuel Gas Code, ANSI Z223.1/NFPA 54 and or CAN/CSA B149.1, Natural Gas and Propane Installation Code.

4. WATER PIPING & CONTROLS

A. GENERAL

1. Size water supply and return piping in accordance with system requirements. Do not use smaller diameter piping than the boiler connections.

2. If the *PureFire*® boiler is used to replace an existing boiler, make sure that the system piping is thoroughly cleaned and free from debris before installing this boiler.

3. In hydronic systems where sediment may exist, install a strainer in the boiler return piping to prevent large particles and pipe scale from entering the boiler heat exchanger. Use a large mesh screen in the strainer.

4. Install this boiler so that the gas ignition system components are protected from water (dripping, spraying, etc.) during operation and service (circulator replacement, condensate trap cleaning, sensor replacement, etc.).

B. OPERATING PARAMETERS

1. The *PureFire*® boiler is designed to operate in a closed loop hydronic system under forced circulation. This requires the system to be completely filled with water and requires a minimum water flow through the boiler to operate effectively.

2. The minimum system pressure is 14.5 PSI (69 kPa).

3. Table 4.1 lists the minimum flow rates for each *PureFire*® model. If a glycol solution is to be used, contact your PB Heat, LLC representative for minimum flow rates.

Table 4.1: Minimum Flow Rate

PureFire® Model	Minimum Flow Rate	
	Water GPM (LPM)	50% Glycol Solution GPM (LPM)
PF-50	2.2 (8.3)	2.8 (10.6)
PF-80	3.3 (12.5)	4.1 (15.5)
PF-110	4.4 (16.7)	5.5 (20.8)
PF-140	5.5 (20.8)	6.8 (25.7)
PF-210	5.5 (20.8)	6.8 (25.7)
PF-399	13.2 (50.0)	16.5 (62.5)

Section 4.E provides detailed information about using glycol for freeze protection.

Table 4.2 provides the water volume of the heat exchanger including the supply and return pipes that are attached at the factory.

Table 4.2: Heat Exchanger Water Capacity

PureFire® Model	Total Water Capacity Gallons (Liters)
PF-50	0.62 (2.35)
PF-80	0.72 (2.73)
PF-110	0.89 (3.37)
PF-140	1.25 (4.73)
PF-210	1.19 (4.50)
PF-399	2.60 (9.84)

C. SYSTEM COMPONENTS

Figure 4.1 shows the symbol key for piping diagrams in this section. The following are brief descriptions of system components.

1. *Pressure/Temperature Gauge*: A combination pressure/temperature gauge is provided with each *PureFire*® boiler to be mounted in the piping from the boiler supply to the system as shown in Figure 4.2. Most local codes require this gauge.

2. *Air Elimination*: Closed loop hydronic systems require air elimination devices. As the system water is heated, dissolved oxygen and other gases will separate from the liquid. An air elimination device (such as a TACO Vortech® Air Separator) is required to remove the dissolved gases preventing corrosion in the piping system and eliminating noise.

3. *Expansion Tank*: An expansion tank (such as a Bell & Gossett Series HFT) is required to provide room for expansion of the heating medium (water or glycol solution). Consult the expansion tank manufacturer's instructions for specific information regarding installation. The expansion tank is to be sized for the required system volume and capacity. In addition, be sure that the expansion tank is sized based on the proper heating medium. Glycol solutions may expand more than water for a similar temperature rise.

⚠ CAUTION

Use only inhibited propylene glycol solutions which are specifically formulated for hydronic systems. Unlike automotive antifreeze, solutions for hydronic applications contain corrosion inhibitors that will protect system components from premature failure due to corrosion.

⚠ WARNING

Use only inhibited propylene glycol solutions which are specifically formulated for hydronic systems. Ethylene glycol is toxic and may cause any environmental hazard if a leak or spill occurs.

4. *Y-Type Strainer or Filter Ball® Valve*: PB Heat recommends the use of a strainer device in the system to prevent dirt or sediment from clogging the heat exchanger. A 20 mesh stainless steel screen is adequate to protect the heat exchanger. The strainer should be cleaned often in the first several months of operation. The Filter Ball® Valve from Jomar International incorporates a strainer into a ball valve which allows the technician to isolate the water circuit while cleaning the strainer.

5. *Flow Control Valve*: Flow control valves such as the TACO Flo-Chek or Bell & Gossett Flo-Control™ are used to prevent gravity circulation by incorporating a check valve with a weighted disc.

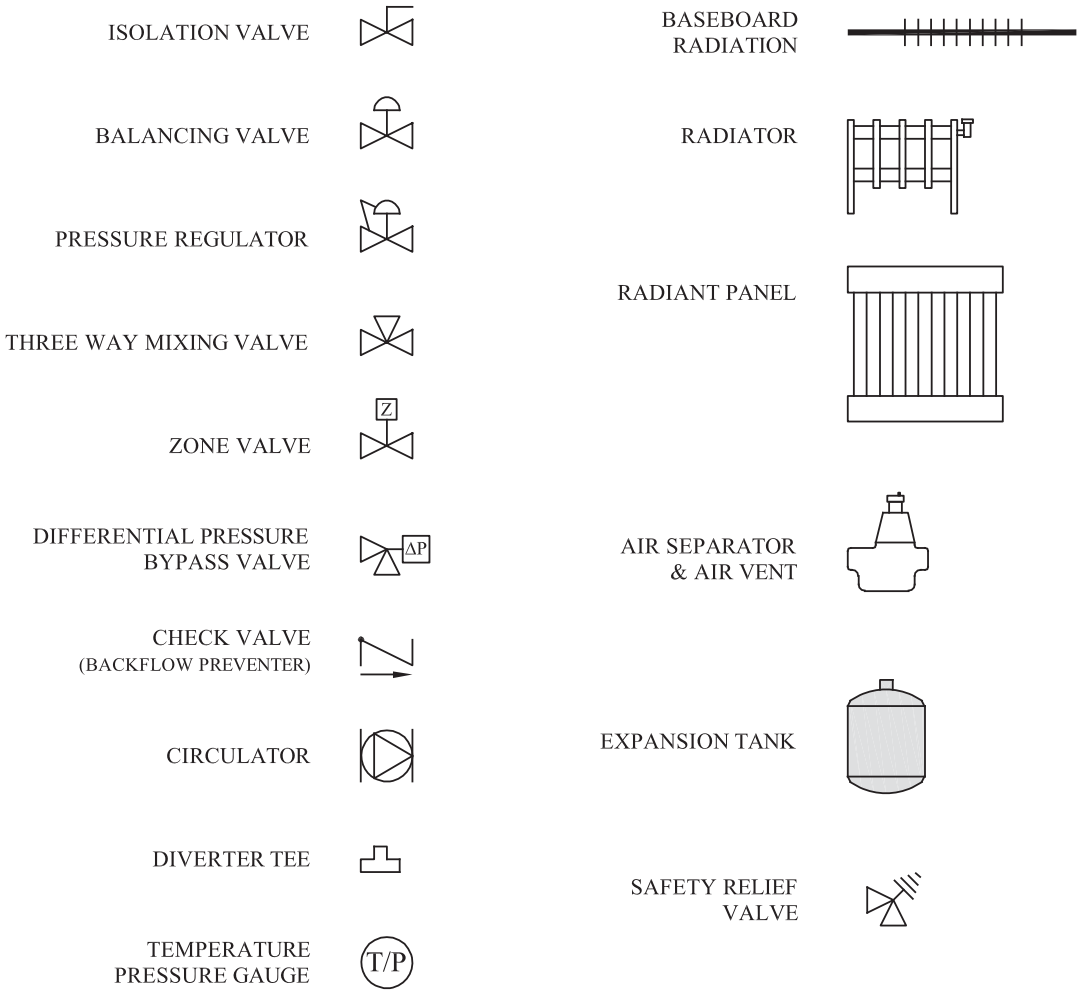

Figure 4.1: Piping Symbol Key

6. *Pressure Reducing Valve*: A pressure reducing valve, such as the Bell & Gossett B-38 or a TACO #329, is used in a hydronic system to automatically feed water to the system whenever pressure in the system drops below the pressure setting of the valve. These valves should not be used on glycol systems unless close supervision of the glycol solution is practiced.

7. *Back Flow Preventer*: A back flow preventer (check valve) is required by some jurisdictions to prevent water in the hydronic system from backing up into the city water supply. This is especially important on systems in which glycol solution is used as the heating medium.

8. *Pressure Relief Valve*: The boiler pressure relief valve is shipped separately for field installation.

⚠ WARNING

Do not operate this appliance without installing the pressure relief valve supplied with the boiler or one with sufficient relieving capacity in accordance with the ASME Rating Plate on the boiler heat exchanger.

The valve is to be installed as shown in Figures 4.2 or 4.3. Pipe the discharge of the relief valve to within 12" of the floor and close to a floor drain.

⚠ CAUTION

Pipe the discharge of the relief valve as close as possible to the floor and away from high traffic areas. Pipe the discharge to a floor drain. Failure to do so may result in personal injury and/or property damage.

Provide piping that is the same size or larger than the relief valve outlet.

9. *Circulator*: The boiler circulator is to be sized to overcome the pressure drop of the system while providing the flow required by the boiler.
   a. If the boiler is piped in a secondary loop of a primary/secondary heating system, the circulator will need only to overcome the resistance of the boiler and any fittings in that loop.

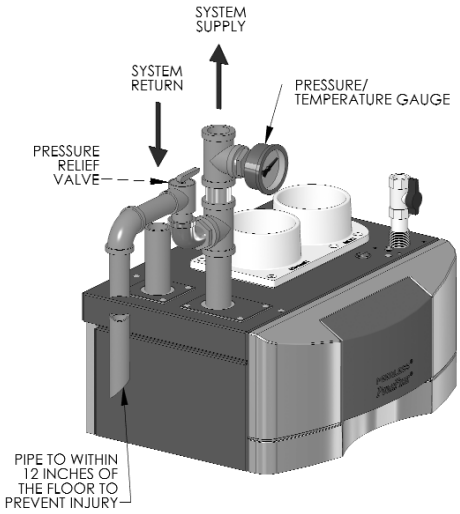

Figure 4.2: Relief Valve Installation – PF-50, PF-80, PF-110 & PF-140

b. The circulator should be sized based on gross output of the boiler. Table 4.3 shows the Boiler Output as reported to the Hydronics Institute Section of AHRI.

Table 4.3: Boiler Inputs and Outputs

PureFire® Model	Boiler Input Btu/hr (kW)	Gross Output Btu/hr (kW)
PF-50	50,000 (14.7)	46,000 (13.5)
PF-80	80,000 (23.4)	74,000 (21.7)
PF-110	110,000 (34.2)	102,000 (29.9)
PF-140	140,000 (41.0)	131,000 (38.4)
PF-210	210,000 (61.5)	193,000 (56.6)
PF-399	399,000 (116.9)	373,000 (109.3)

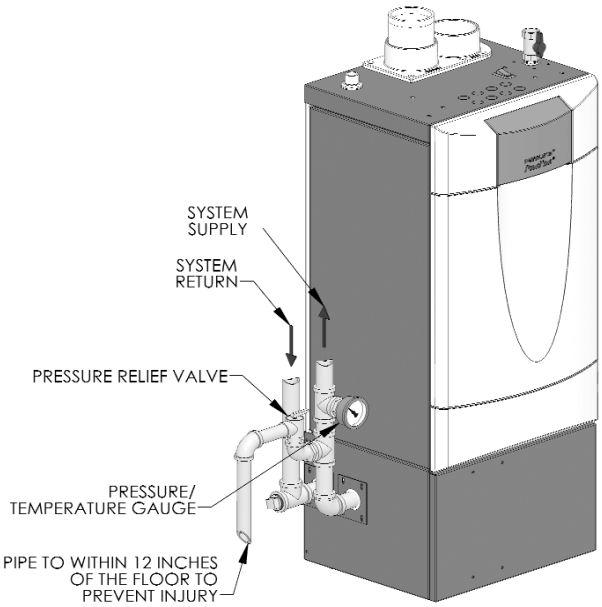

Figure 4.3: Relief Valve Installation – PF-210 & PF-399

c. The required flow is calculated based on the design temperature difference from the return to the supply of the boiler. For a PF-110 with a design temperature difference of 20°F the calculation is as follows.

$$\text{Required Flow} = \frac{\text{Output}}{\Delta T \times 500} = \frac{101{,}000}{20 \times 500} = 10.1 \text{ GPM}$$

d. The boiler pressure drop for various flow rates can be determined using Figure 4.4, the *PureFire*® Boiler Circulator Sizing Graph.

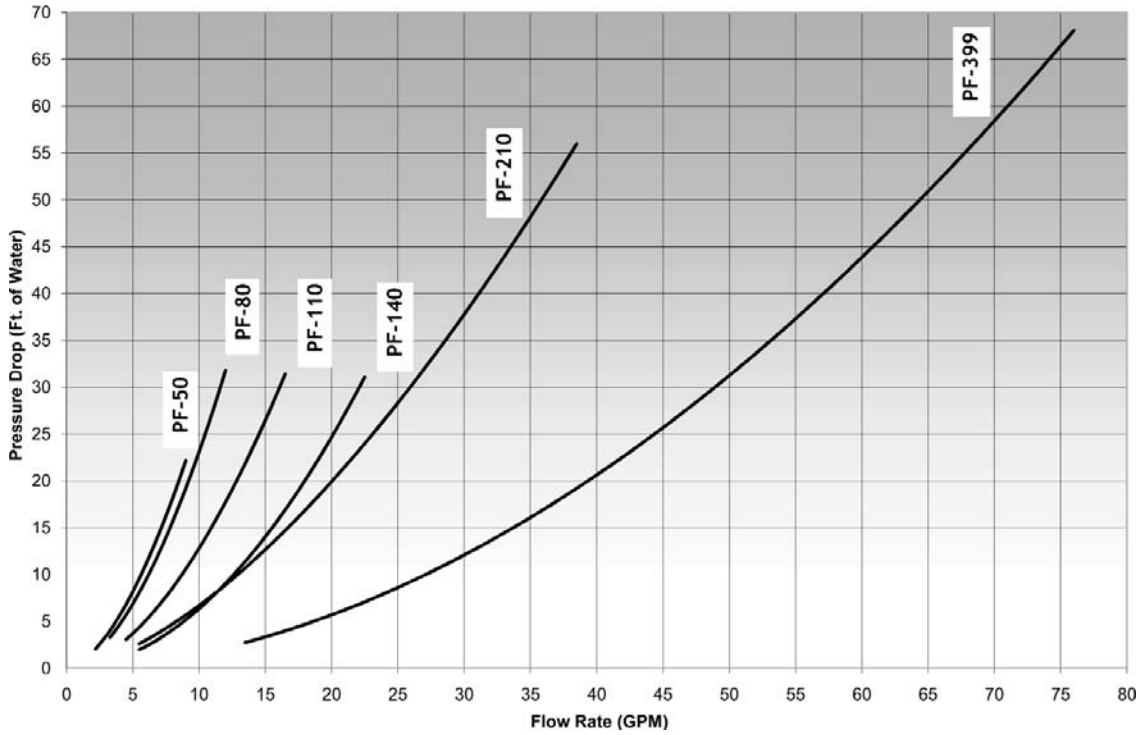

Figure 4.4: *PureFire*® Circulator Sizing Graph (General Pump – Primary/Secondary)

e. Table 4.4 provides the flow rate and pressure drop information that corresponds to various system temperature rise values (ΔT). The pressure drop shown is for the boiler only. If there is significant system pressure drop in the system, this should be included when specifying circulators.

f. Table 4.5 provides a list of recommended circulators for boilers on a secondary loop of a primary/secondary system which uses water as a heating medium.

Table 4.4: Flow Rate and Pressure Drop for Various System Temperature Rise Values

ΔT (°F)	Flow Rate & Pressure Drop											
	PF-50		PF-80		PF-110		PF-140		PF-210		PF-399	
	GPM	FT	GPM	FT	GPM	FT	GPM	FT	GPM	FT	GPM	FT
40	2.3	2.17	3.7	3.92	5.1	3.74	6.5	2.70	9.6	6.23	18.7	4.97
35	2.6	2.72	4.2	4.95	5.8	4.75	7.4	3.51	11.0	7.69	21.3	6.38
30	3.1	3.54	4.9	6.49	6.7	6.27	8.7	4.75	12.8	9.81	24.9	8.50
25	3.7	4.83	5.8	8.95	8.1	8.70	10.4	6.80	15.4	13.09	29.8	11.93
20	4.6	7.06	7.3	13.25	10.1	12.99	13.0	10.55	19.2	18.63	37.3	18.08
15	6.1	11.52	9.7	21.97	13.5	21.78	17.3	18.58	25.6	29.35	49.7	30.90
10	9.2	22.97	14.6	44.81	20.2	45.11	26.0	41.26	38.4	55.71	74.6	65.74

Table 4.5: Circulator Selection Chart (General Pump – Primary Secondary)

Circulator Manufacturer	Temperature Difference	PF-50	PF-80	PF-110	PF-140	PF-210	PF-399
Taco	20°F	005*	009	0014	0014	1400-20	1400-50
Grundfos		UPS15-58FC Med Speed	UPS15-58FC Hi Speed	UPS26-99FC Med Speed	UPS26-99FC Med Speed	UPS32-80F Med Speed	UPS32-160F Med Speed
Bell & Gossett		NRF-22	NRF-22	NRF-36	NRF-25	NRF-36	PL-55
Wilo		Star S 21 FX Med Speed	Star S 21 FX Hi Speed	Star S 21 FX Hi Speed	Star 30 F	Top S 1.25 x 25 Max	Top S 1.25 x 35 Max
Taco	25°F	006F*	007	008	007	0014	1400-20
Grundfos		UPS15-58FC Lo Speed	UPS15-58FC Med Speed	UPS15-58FC Hi Speed	UPS15-58FC Hi Speed	UPS26-99FC Med Speed	UPS32-80F Med Speed
Bell & Gossett		NRF-9F/LW	NRF-22	NRF-22	NRF-22	NRF-45	PL-50
Wilo		Star S 21 FX Low Speed	Star S 21 FX Med Speed	Star S 21 FX Hi Speed	Star S 21 FX Hi Speed	Star 30 F	Top S 1.25 x 35 Max
Taco	30°F	006F*	005*	005*	005*	0014	0013
Grundfos		UP15-10F	UPS15-58FC Med Speed	UPS15-58FC Med Speed	UPS15-58FC Med Speed	UPS26-99FC Med Speed	UPS26-99FC Hi Speed
Bell & Gossett		NRF-9F/LW	NRF-22	NRF-22	NRF-22	NRF-25	NRF-36
Wilo		Star S 21 FX Min Speed	Star S 21 FX Med Speed	Star S 21 FX Med Speed	Star S 21 FX Hi Speed	Star 30 F	Star 17 FX
Taco	35°F	006F*	006F*	006F*	006F*	0010	0014
Grundfos		UP15-10F	UPS15-58FC Lo Speed	UPS15-58FC Med Speed	UPS15-58FC Med Speed	UPS15-58FC Hi Speed	UPS26-99FC Hi Speed
Bell & Gossett		N/A	NRF-9F/LW	NRF-9F/LW	NRF-9F/LW	NRF-22	NRF-45
Wilo		Star S 21 FX Min Speed	Star S 21 FX Min Speed	Star S 21 FX Med Speed	Star S 21 FX Med Speed	Star S 21 FX Hi Speed	Star 30 F
Taco	40°F	006F*	006F*	006F*	006F*	007	0010
Grundfos		UP15-10F	UPS15-58FC Lo Speed	UPS15-58FC Lo Speed	UPS15-58FC Lo Speed	UPS15-58FC Hi Speed	UPS26-99FC Med Speed
Bell & Gossett		N/A	NRF-9F/LW	NRF-9F/LW	NRF-9F/LW	NRF-22	NRF-33
Wilo		Star S 21 FX Min Speed	Star S 21 FX Min Speed	Star S 21 FX Min Speed	Star S 21 FX Min Speed	Star S 21 FX Hi Speed	Star 30 F

* A model 007 circulator can be substituted for those marked with an asterisk based on availability.

g. Special consideration must be given if a glycol based anti-freeze solution is used as a heating medium. Propylene glycol has a higher viscosity than water, therefore the system pressure drop will be higher.

⚠ NOTICE

The circulator sizing given is for primary/secondary installations only. The system circulators must be sized based on the flow and pressure drop requirements of the system.

10. *Indirect Water Heater*: An indirect water heater should be piped to a dedicated zone. The *PureFire*® boiler provides electrical terminals for connecting a domestic hot water (DHW) circulator. Examples of piping for the indirect water heater are shown under subsection "D", System Piping of this section.

D. SYSTEM PIPING

1. Figure 4.5 shows a single boiler with multiple heating zones. In this case, the DHW zone is piped in parallel to the heating zones on the primary loop.

2. For a single boiler with one heating zone and one DHW zone which utilizes an indirect water heater like the Peerless® Partner®, pipe the boiler as shown in Figure 4.6. In systems like this, the DHW circulator must be sized to provide the minimum flow rate through the boiler.

3. In Figure 4.7 an additional boiler is added and more heating zones are shown. Notice that the two boilers are piped in parallel on the secondary loop. This maximizes the efficiency of the boilers since the lowest temperature system water is returning to both boilers.

4. Figure 4.8 shows a multiple boiler system with several different types of heat distribution units. This system illustrates how different temperature zones can be supplied from the same source by blending supply and return water to the zone.

5. In Figure 4.9 zone valves are used instead of zone circulators. Notice that the system is piped using reverse return piping to help balance the flow through the zones. If the zone lengths vary balancing valves are required on each loop.

E. FREEZE PROTECTION

1. Glycol for hydronic applications is specially formulated for heating systems. It includes inhibitors which prevent the glycol from attacking metallic system components. Make sure that the system fluid is checked for correct glycol concentration and inhibitor level.

2. Use only inhibited polypropylene glycol solutions of up to 50% by volume. Ethylene glycol is toxic and can chemically attack gaskets and seals used in hydronic system.

3. The anti-freeze solution should be tested at least once per year and as recommended by the manufacturer of the product.

4. Anti-freeze solutions expand more than water. For example, a 50% by volume solution expands 4.8% with a 148°F temperature rise while water expands about 3% for the same temperature increase. Allowance for this expansion must be considered in sizing expansion tanks and related components.

5. The flow rate in systems utilizing glycol solutions should be higher than in a water system to compensate for decreased heating capacity of the fluid.

6. Due to increased flow rate and fluid viscosity, the circulator head requirement will increase. Contact the pump manufacturer to correctly size the circulator for a particular application based on the glycol concentration and heating requirements.

7. A strainer, sediment trap, or some other means for cleaning the piping system must be provided. It should be located in the return line upstream of the boiler and must be cleaned frequently during the initial operation of the system. Glycol is likely to remove mill scale from new pipe in new installations.

8. Glycol solution is expensive and leaks should be avoided. Weld or solder joints should be used where possible and threaded joints should be avoided. Make-up water should not be added to the system automatically when glycol solution is used. Adding make-up water will dilute the system and reduce the ability of the solution to protect from freezing.

9. Check local regulations to see if systems containing glycol solutions must include a back-flow preventer or require that the glycol system be isolated from the water supply.

10. Do not use galvanized pipe in glycol systems.

11. Use water that is low in mineral content and make sure that there are no petroleum products in the solution.
    a. Less than 50 ppm of calcium
    b. Less than 50 ppm of magnesium
    c. Less than 100 ppm (5 grains/gallon) of total hardness
    d. Less than 25 ppm of chloride
    e. Less than 25 ppm of sulfate

12. Check with the local water supplier for chemical properties of the water.

13. The following test will determine if the water is of the appropriate hardness. Collect a sample of 50% water to 50% propylene glycol. Let the solution stand for 8-12 hours shaking it occasionally. If white sediment forms, the water is too hard and should not be used to dilute the glycol.

14. Mix the solution at room temperature.

15. Do not use a chromate treatment.

16. Refer to Technical Topics #2a published by the Hydronics Institute for further glycol system considerations.

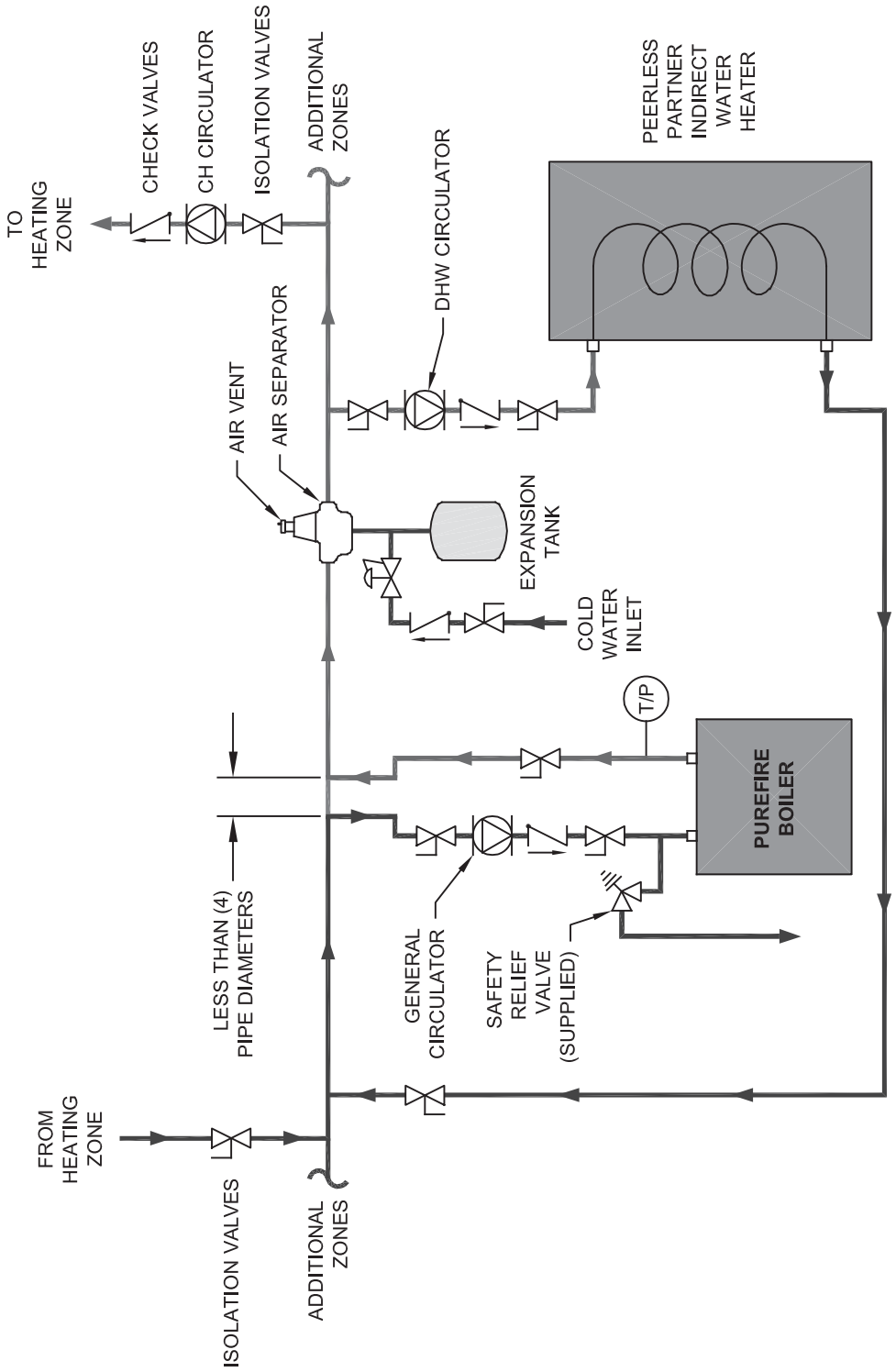

Figure 4.5: Recommended Piping – One Boiler, Primary/Secondary with Two Zones (Zone Circulator)

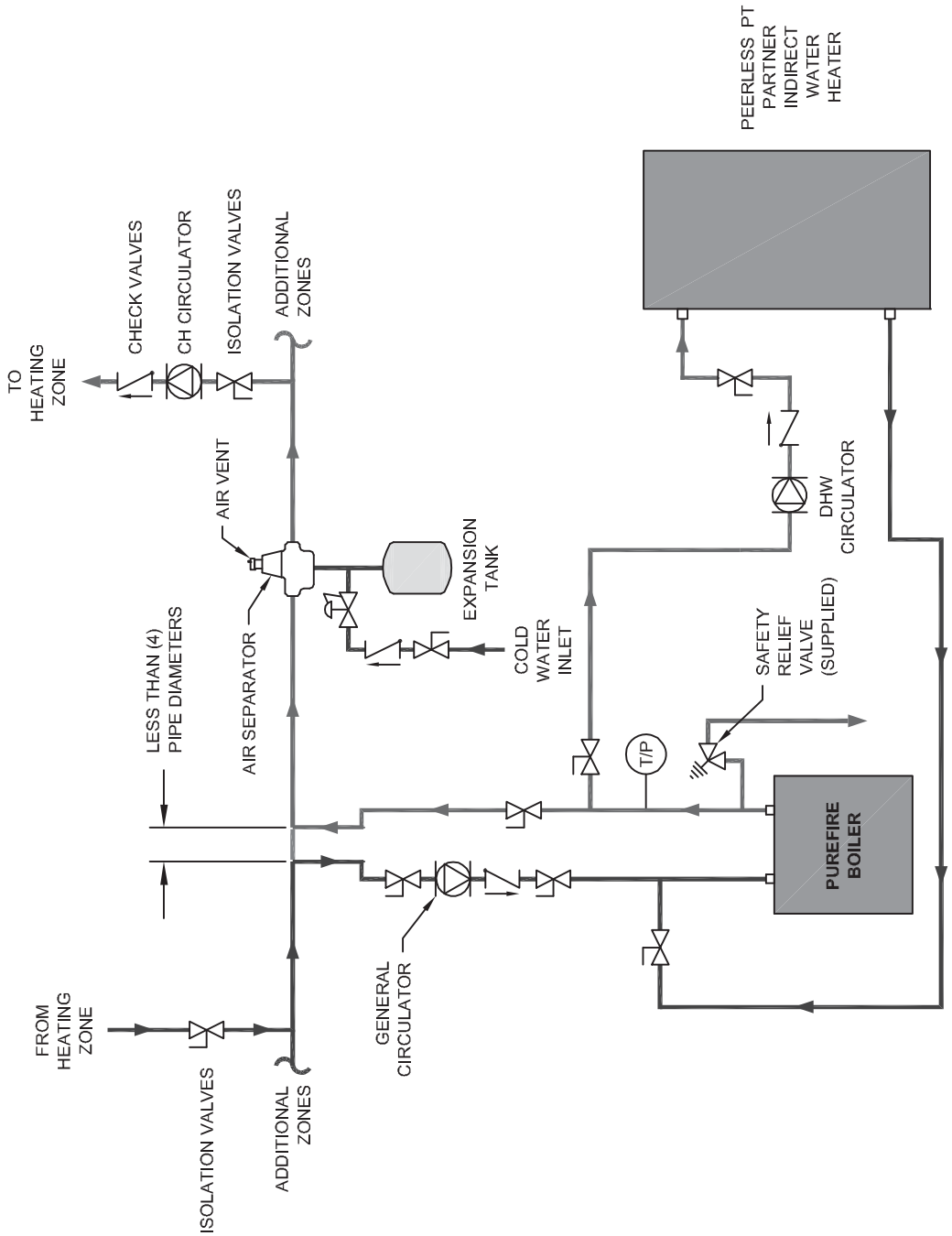

Figure 4.6: Alternate Piping – One Boiler, Primary/Secondary with a Peerless® Partner® (Zone Circulators).
Note: **The DHW Circulator must be sized to provide minimum flow through the boiler**

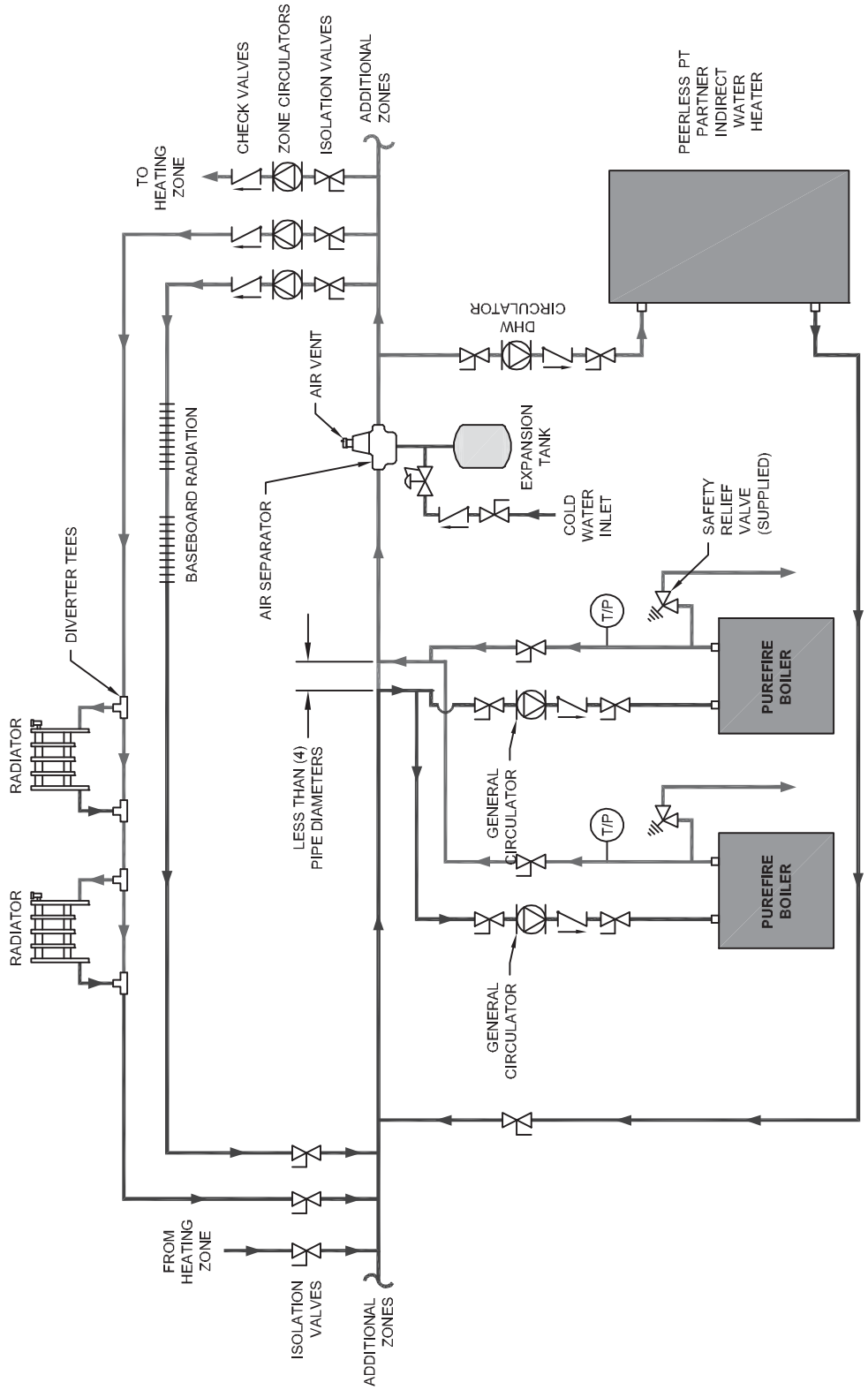

Figure 4.7: Two Boilers, Primary/Secondary with Four Zones (Zone Circulator)

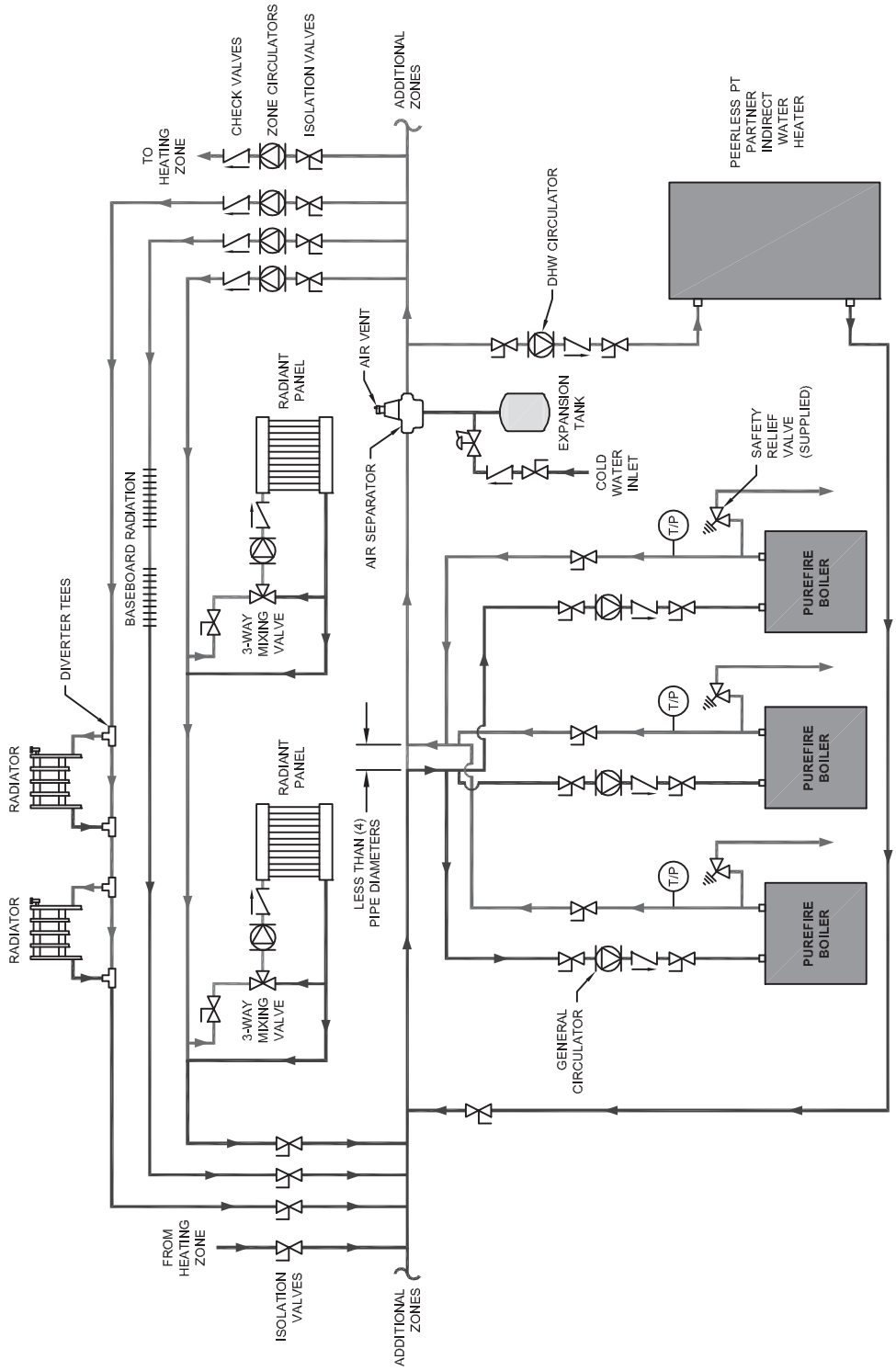

Figure 4.8: Three Boilers, Primary/Secondary with Five Zones (Zone Circulator)

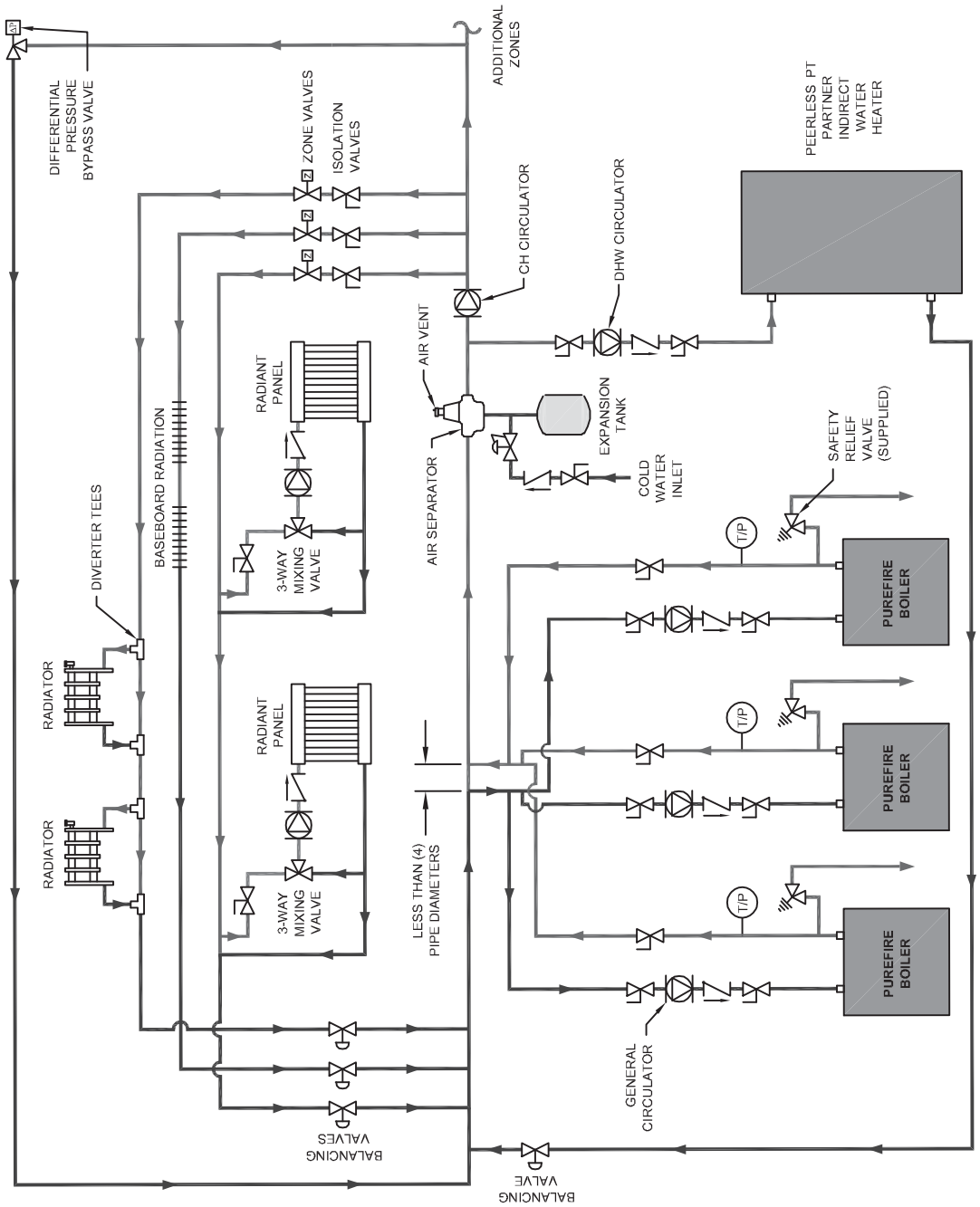

Figure 4.9: Three Boilers, Primary/Secondary with Four Zones (Zone Valves)

F. SPECIAL APPLICATIONS

1. If the *PureFire*® boiler is used in conjunction with a chilled medium system, pipe the chiller in a separate secondary loop.
   a. Assure that the boiler circulator is disabled during chiller operation so that chilled water does not enter the boiler.
   b. Install a flow control valve (spring check valve) to prevent gravity flow through the boiler.
   c. See Figure 4.10 for recommended system piping for chiller operation.
2. For boilers connected to heating coils in a forced air system where they may be exposed to chilled air circulation, install flow control valves or other automatic means to prevent gravity circulation of the boiler water during cooling cycles. See Figure 4.11 for an illustration.

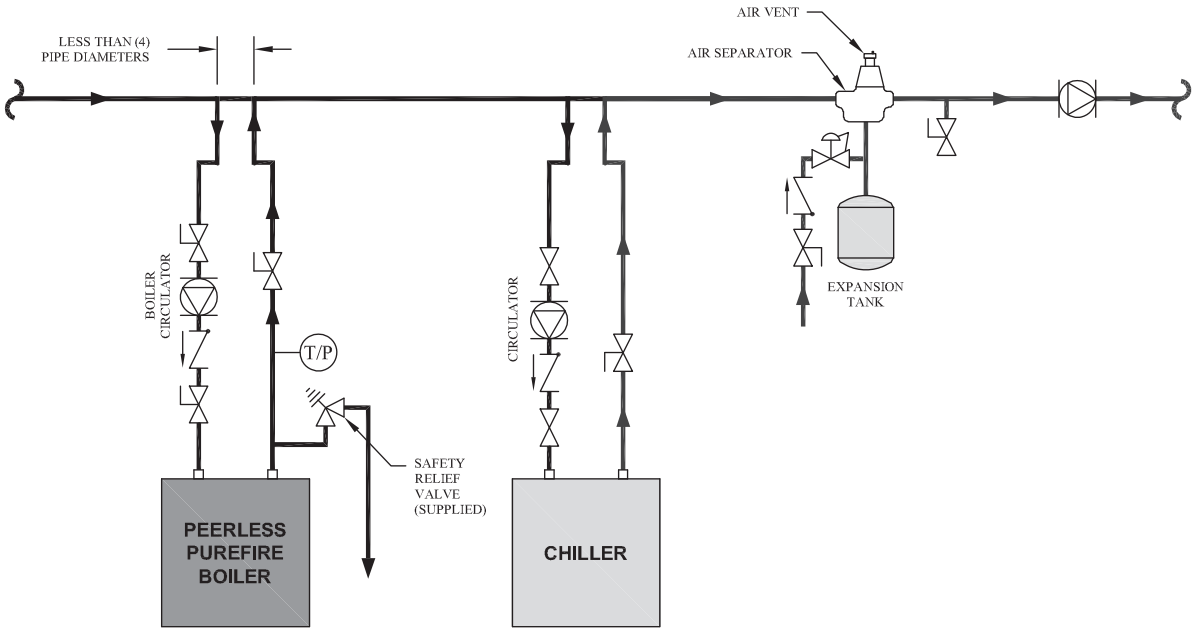

Figure 4.10: Boiler in conjunction with a Chilled Water System

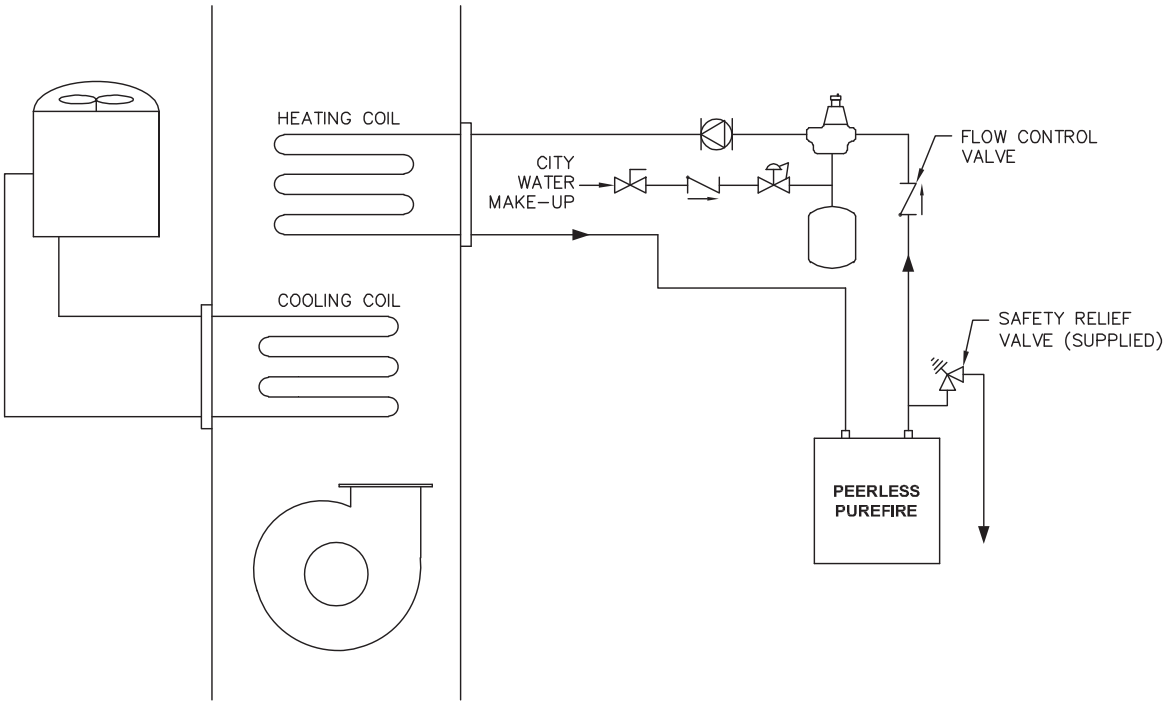

Figure 4.11: Boiler Connected to a Heating Coil in a Forced Air System

5. FUEL PIPING

A. GENERAL

1. All fuel piping to the *PureFire*® boiler is to be in accordance with local codes. In the absence of local regulations refer to the National Fuel Gas Code, ANSI Z223.1/NFPA 54.

2. Size and install fuel piping to provide a supply of gas sufficient to meet the maximum demand of all appliances supplied by the piping.

B. FUEL LINE SIZING

1. The required flow rate of gas fuel to the boiler can be determined by the following.

$$\text{Input Rate}\left(\text{ft}^3/\text{hr}\right) = \frac{\text{Boiler Input Rate}\left(\text{Btu}/\text{hr}\right)}{\text{Gas Heating Value}\left(\text{Btu}/\text{ft}^3\right)}$$

   The gas heating value can be supplied by the gas supplier.

2. As an alternative, use Table 5.1 to determine the required gas flow rate which uses typical heating values for natural gas and liquefied petroleum (LP) gas.

3. Table 5.2 shows the maximum flow capacity of several pipe sizes based on 0.3" of pressure drop.
   a. The values shown are based on a gas specific gravity of 0.60 (Typical for natural gas).

   b. Multiply the capacities listed by the correction factors listed for gas with a specific gravity other than 0.60 to obtain the corrected capacity.

4. Size and install the fuel gas supply piping for no more than 0.5 inches of water pressure drop between the gas regulator and the boiler.

C. GAS SUPPLY PIPING - INSTALLATION

1. Do not install any piping directly in front of the boiler or along either side. Always provide access to the front cover and side panel openings.

2. Install a sediment trap as shown in Figure 5.1. Be sure to allow clearance from the floor or other horizontal surface for removal of the pipe cap.

⚠ WARNING

Use a pipe joint sealing compound that is resistant to liquefied petroleum gas. A non-resistant compound may lose sealing ability in the presence of this gas, resulting in a gas leak. Gas leaks may potentially cause an explosion or fire.

Table 5.1: Required Fuel Input

PureFire® Model	Required Input Rate*	
	Natural Gas ft³/hr (m³/hr)	LP Gas ft³/hr (m³/hr)
PF-50	50 (1.4)	20 (0.6)
PF-80	80 (2.3)	32 (0.9)
PF-110	110 (3.1)	44 (1.2)
PF-140	140 (4.0)	56 (1.6)
PF-210	210 (5.9)	84 (2.4)
PF-399	399 (11.3)	166 (4.7)

* Natural gas input rates are based on 1,000 Btu/ft³, LP input rates are based on 2,500 Btu/ft³.

Table 5.2: Pipe Capacity:
Maximum Capacity of pipe in cubic feet per hour (cubic meters per hour) with a pressure drop of 0.3" of water (75 Pa).

Pipe Length ft (m)	1/2" NPT Pipe	3/4" NPT Pipe	1" NPT Pipe	1-1/4" NPT Pipe	1-1/2" NPT Pipe
10 (3.0)	132 (3.7)	278 (7.9)	520 (14.7)	1,050 (29.7)	1,600 (45.3)
20 (6.1)	92 (2.6)	190 (5.4)	350 (9.9)	730 (20.7)	1,100 (31.1)
30 (9.1)	73 (2.1)	152 (4.3)	285 (8.1)	590 (16.7)	890 (25.2)
40 (12.2)	63 (1.8)	130 (3.7)	245 (6.9)	500 (14.2)	760 (21.5)
50 (15.2)	56 (1.6)	115 (3.3)	215 (6.1)	440 (12.5)	670 (19.0)
60 (18.3)	50 (1.4)	105 (3.0)	195 (5.5)	400 (11.3)	610 (17.3)
70 (21.3)	46 (1.3)	96 (2.7)	180 (5.1)	370 (10.5)	560 (15.9)
80 (24.4)	43 (1.2)	90 (2.5)	170 (4.8)	350 (9.9)	530 (15.0)
90 (27.4)	40 (1.1)	84 (2.4)	160 (4.5)	320 (9.1)	490 (13.9)
100 (30.5)	38 (1.1)	79 (2.2)	150 (4.2)	305 (8.6)	460 (13.0)

The values are based on a specific gravity of 0.60 (typical for natural gas). See Table 4.3 for capacity correction factors for gases with other specific gravities.

Specific Gravity	0.50	0.55	0.60	0.65	0.70	0.75
Correction Factor	1.10	1.04	1.00	0.96	0.93	0.90
Specific Gravity	0.80	0.85	0.90	1.00	1.10	1.20
Correction Factor	0.87	0.84	0.82	0.78	0.74	0.71
Specific Gravity	1.30	1.40	1.50	1.60	1.70	1.80
Correction Factor	0.68	0.66	0.63	0.61	0.59	0.58

3. Install a ground joint union between the sediment trap and the boiler to allow service to the appliance.

4. Install a service valve as shown in Figure 5.1 to allow the gas supply to be interrupted for service.

5. Maintain a minimum distance of 10 feet between the gas pressure regulator and the boiler.

6. Check all gas piping for leaks prior to placing the boiler in operation. Use an approved gas detector, non-corrosive lead detection fluid, or other leak detection method. If leaks are found, turn off gas flow and repair as necessary.

⚠ WARNING

When checking for leaks, do not use matches, candles, open flames or other methods that provide an ignition source. This may ignite a gas leak resulting in a fire or explosion.

7. Figure 5.1 shows the gas shutoff valve for the *PureFire*® boiler. This valve is to be used in addition to the gas service valve shown upstream of the sediment trap.

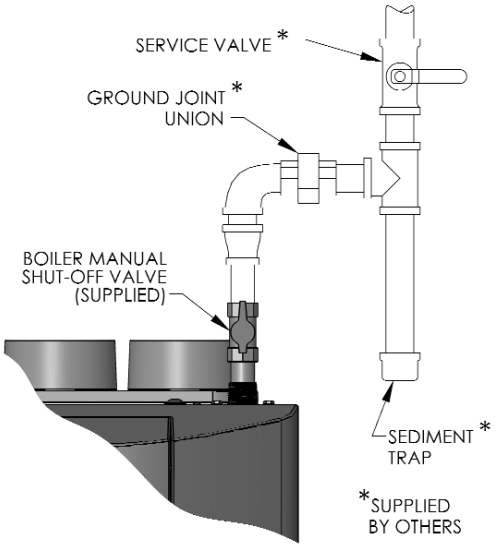

Figure 5.1: Gas Supply Pipe and Shut-off

D. GAS SUPPLY PIPING - OPERATION

1. The gas line must be properly purged of air to allow the boiler to operate properly. Failure to do so may result in burner ignition problems.

2. Table 5.3 shows the maximum and minimum fuel gas supply pressure to be measured at the gas valve inlet pressure tap. See figure 5.2.
   a. Gas pressure below 3.5 inches of water may result in burner ignition problems.
   b. Gas pressure above 13.5 inches of water may result in damage to the automatic gas valve.

⚠ CAUTION

Do not subject the gas valve to more that 1/2 psi (13.5" W.C.) of pressure. Doing so may damage the gas valve.

Table 5.3: Maximum and Minimum Fuel Pressure

Fuel Type	Pressure Inches W.C. (Pa)	
	Minimum	Maximum
Natural Gas	3.5	13.5
LP Gas	3.5	13.5

3. To check the gas supply pressure to on the gas valve:
   a. Turn off the power at the service switch.
   b. Close the gas shutoff valve.
   c. Using a flat screwdriver, turn the screw inside the inlet tap fitting (see Figure 5.2) one turn counter clockwise.
   d. Attach the tube from the manometer to the pressure tap fitting.
   e. Open the gas valve and start the boiler.
   f. Read and record the gas pressure while the boiler is firing.
   g. Turn off the boiler and close the gas shutoff valve.
   h. Remove the manometer tube from the pressure tap fitting.
   i. Turn the internal screw clockwise to close the valve.
   j. Turn on the gas shutoff valve and boiler service switch.
   k. Fire the boiler and check for fuel gas odor around the gas valve. If an odor is evident check to make sure that the pressure tap fitting is closed.

4. All gas piping must be leak tested prior to placing the boiler in operation.
   a. If the leak test pressure requirement is higher than 13.5 inches of water column, the boiler must be isolated from the gas supply piping system.
   b. If the gas valve is exposed to pressure exceeding 13.5 inches of water column, the gas valve must be replaced.

5. Install the boiler such that the gas ignition system components are protected from water (dripping, spraying, rain, etc.) during operation and service (circulator replacement, condensate collector and neutralizer cleanout, control replacement etc.)

E. MAIN GAS VALVE - OPERATION

1. Figure 5.2 is an illustration of the gas valve/venturi assembly for the *PureFire*® boiler.
   a. Adjustments should not be made to the gas valve without instrumentation to measure carbon dioxide (CO_2) and carbon monoxide (CO) emissions in the vent pipe.
   b. Turning the throttle screw clockwise will decrease the gas flow (decreasing CO_2) and turning it counterclockwise will increase the gas flow rate (increasing CO_2). Markings adjacent to the throttle screw show + and – indicating this operation.
   c. The recommended CO_2 settings are given in Table 5.4. In no case should the boiler be allowed to operate with CO emissions above 150 ppm.

Table 5.4: Recommended CO_2 Settings

	Natural Gas		Propane (LP)	
	Low Fire	**High Fire**	**Low Fire**	**High Fire**
Carbon Monoxide (CO)	< 50 ppm	< 100 ppm	< 50 ppm	< 100 ppm
Carbon Dioxide (CO_2)	8.8% to 10.0%	8.5% to 9.5%	9.8% to 11.0%	9.5% to 10.5%
Excess Oxygen (O_2)	3.4% to 5.4%	4.2% to 6.0%	4.2% to 6.0%	4.9% to 6.5%
Excess Air	17.3% to 31.0%	22.4% to 35.8%	22.4% to 35.8%	27.3% to 40.1%

2. Refer to Section 3, Venting and Air Intake for information on obtaining vent samples from this boiler.

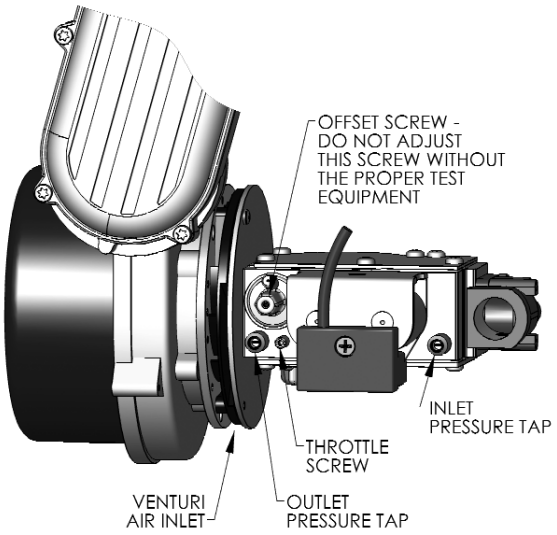

Figure 5.2: Gas Valve/Venturi

6. CONDENSATE DRAIN PIPING

A. GENERAL

1. The disposal of all condensate into public sewage systems is to be in accordance with local codes and regulations. In the absence of such codes, follow these instructions.

2. Proper piping and removal of condensation from combustion is critical to the operation of a condensing appliance. Follow these instructions carefully to assure that your *PureFire*® boiler operates correctly.

3. Depending on several factors, the condensate from gas fired condensing appliances may have a pH value as low as 2.5 (similar to cola soft drinks). Some local codes require the use of neutralization equipment to treat acidic condensate.

B. CONDENSATE SYSTEM

The *PureFire*® condensate system is designed to prevent condensate from backing up into the heat exchanger, trap the condensate to prevent combustion gases from escaping and neutralize acidic condensate. Refer to Figure 6.1 for an illustration of the system components.

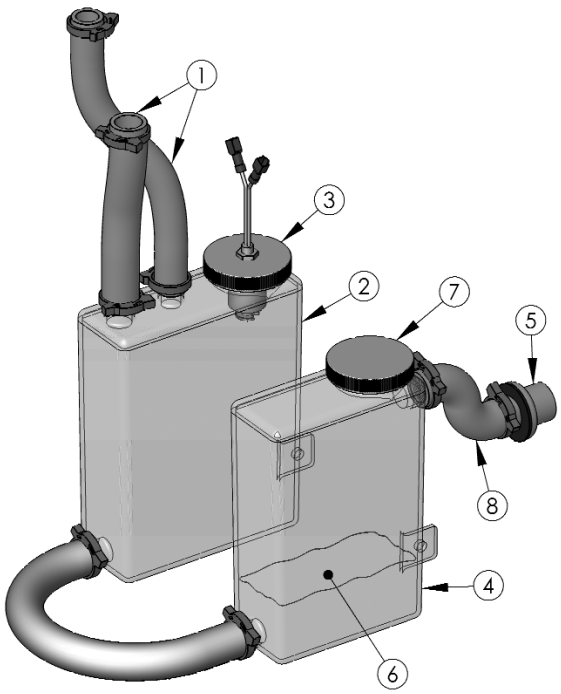

Figure 6.1: Condensate Trap System

1. *Condensate Drain Hoses*: The PF-50, PF-80, PF-110, and PF-140 boilers have two drain hoses attached to the heat exchanger. The first hose drains condensate from the combustion chamber of the boiler. The second hose drains condensate from the vent system. This prevents dirt and debris from the venting system from entering the heat exchanger and fouling the heating surface.

   PF-210 and PF-399 boilers have only one drain attached directly to the combustion chamber. To prevent debris from entering the heat exchanger, a separate drain can be added to the vent system as shown in Figure 6.2. However, be sure to adequately trap any vent system drains.

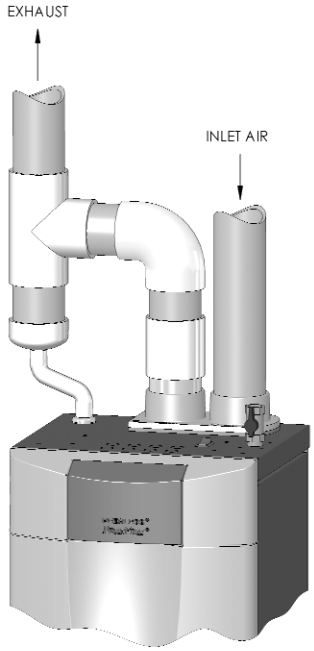

Figure 6.2: Separate Vent Condensate Drain Installation

2. *Condensate Collector Container*: The condensate collector container is a transparent container in the base of the boiler near the back. This container collects the condensate and acts as a part of a trap to prevent combustion gases from escaping. The container is fitted with a level switch that will prevent the boiler from operating if the condensate line is clogged.

3. *Condensate Float Switch*: This switch will prevent the boiler from operating if the condensate outlet is clogged before the level of condensate reaches the heat exchanger.

4. *Condensate Neutralizer Container*: The condensate neutralizer container is an additional transparent container near the front of the boiler. Fill this container with the condensate neutralizer provided. The neutralizer will be consumed during normal operation and should be checked occasionally to determine if additional neutralizer is necessary. Neutralizer is available in 1 lb bags (#54159) from your PB Heat Distributor.

5. *Bulkhead fitting*: The bulkhead fitting allows the condensate tubing to pass through the jacket without providing a path for leakage from the jacket. A PVC TEE is to be attached to the outlet of this fitting to prevent siphoning of the trap.

6. *Neutralizer*: Condensate neutralizer is provided in a package with the boiler to fill the condensate neutralizer container (Item 4).

7. *Neutralizer Cap*: This cap provides access for adding and inspecting the condensate neutralizer.

8. *Condensate Drain Tube*: This pre-formed tube connects the condensate system to the bulkhead fitting for attachment to an external drain.

C. CONDENSATE DRAIN PIPE MATERIAL

The condensate drain is to be piped using PVC, polypropylene, or other material resistant to acidic condensate. Do not use steel, brass or galvanized pipe for this purpose. The acidic condensate will attack most metals and corrode.

D. CONDENSATE DRAIN PIPE SIZING

The bulkhead fitting for condensate connection is for 3/4" schedule 40 PVC Pipe. Be sure to use 3/4" or larger tubing from the boiler to the drain.

E. CONDENSATE DRAIN PIPE INSTALLATION

1. Connect a 3/4" schedule 40 PVC Tee to the outlet of the bulkhead fitting as shown in Figure 6.3. Pipe from the bottom of the tee to a suitable drain.

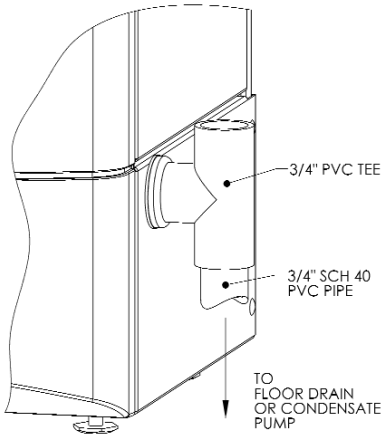

Figure 6.3: Condensate Drain Piping

2. Be sure that the piping slopes away from the boiler with a pitch of 1/4" per foot of pipe.

3. If the boiler condensate drain is above the level of a gravity drain, a condensate pump should be used. Table 6.1 lists several available brands. Contact your PB Heat, LLC Distributor for availability.

Table 6.1: Recommended Condensate Pumps

Brand Name	Model Number
ITT Bell & Gossett	LS
Little Giant	VCMA-15UL
Beckett	CB151LSUL
Hartell	KT-15-1UL

7. ELECTRICAL CONNECTIONS

A. GENERAL

This appliance is to be wired in accordance with local codes and regulations as defined by the Authority having jurisdiction. In the absence of such local codes, the *PureFire*® boiler is to be wired in accordance with the latest edition of the National Electrical Code, ANSI/NFPA 70.

B. CUSTOMER CONNECTIONS

1. Electrical knockouts are provided on the top panel of the boiler to connect supply wiring, circulator wiring and wiring to various instruments.

2. Electrical terminals are located behind the User Interface and can be accessed by loosening the two nuts shown in Figure 7.1.

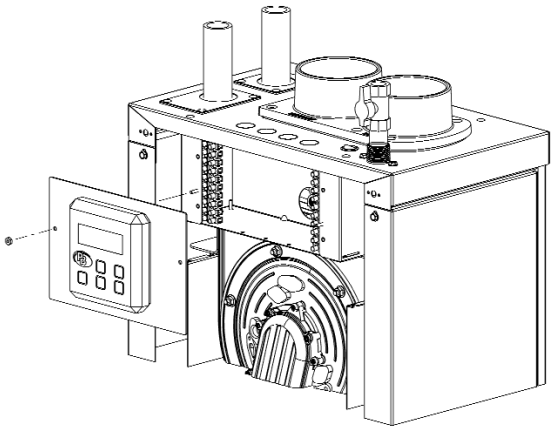

Figure 7.1: Electrical Terminal Access

   a. Remove one of the nuts and leave the other fully loosened in order to leave the display interface panel connected to the appliance.
   b. The terminals can be removed by gently pulling them away from their wired blocks. This allows the installer to easily attach wires to the connector before plugging it into the block.

3. Figure 7.2 shows customer connections for the PF-50, PF-80, PF-110 and PF-140 boilers.
   a. Terminals 1-10 on the left side are for low voltage customer connections to the CH thermostat, outdoor sensor, DHW sensor or thermostat, system sensor and low water cutoff contacts. The outdoor sensor is included. The DHW sensor (54157) and the system sensor (54156) are optional components and the low water cutoff, if used, is to be supplied by others.
   b. Terminals 11-20 on the right side are for line voltage customer connections to DHW, CH, and General Circulators; voltage supply, and low water cutoff (LWCO) power output.

4. Figure 7.3 shows customer connections for the PF-210 and PF-399 boilers.
   a. Terminals 1-10 on the left side are for low voltage customer connections to the CH thermostat, outdoor sensor, DHW sensor or thermostat, system sensor and low water cutoff contacts. The outdoor sensor is included. The DHW sensor (54157) and the system sensor (54156) are optional components and the low water cutoff, if used, is to be supplied by others.
   b. Terminals 11 & 12 on the left side are for connecting multiple boilers together using a cascade link which is described in Section 8.
   c. Terminals 13 & 14 on the left side are dry contacts that will close when there is a DHW call for heat. These provide a signal to a zone controller to prevent the CH circulators from operating during a DHW call-for-heat.
   d. Terminals 15 & 16 are not yet active.
   e. Terminals 17 through 26 on the right side are for line voltage customer connections to DHW, CH, and General Circulators; voltage supply, and low water cutoff (LWCO) power output.

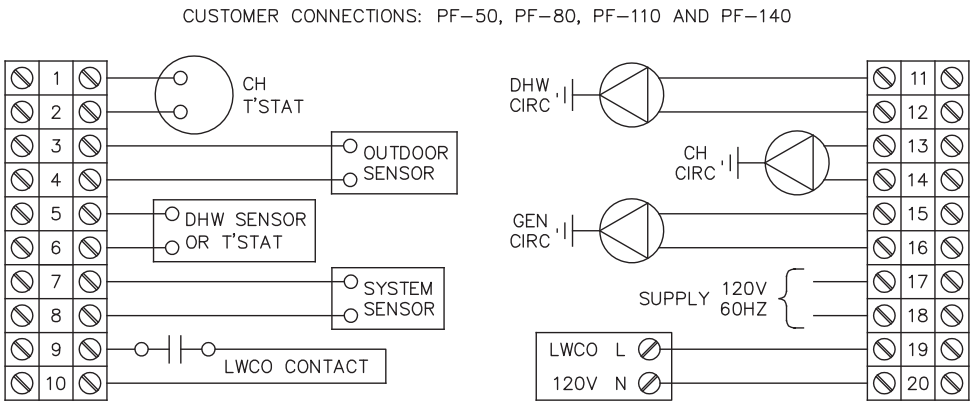

Figure 7.2: Customer Connections – PF-50, PF-80, PF-100 & PF-140

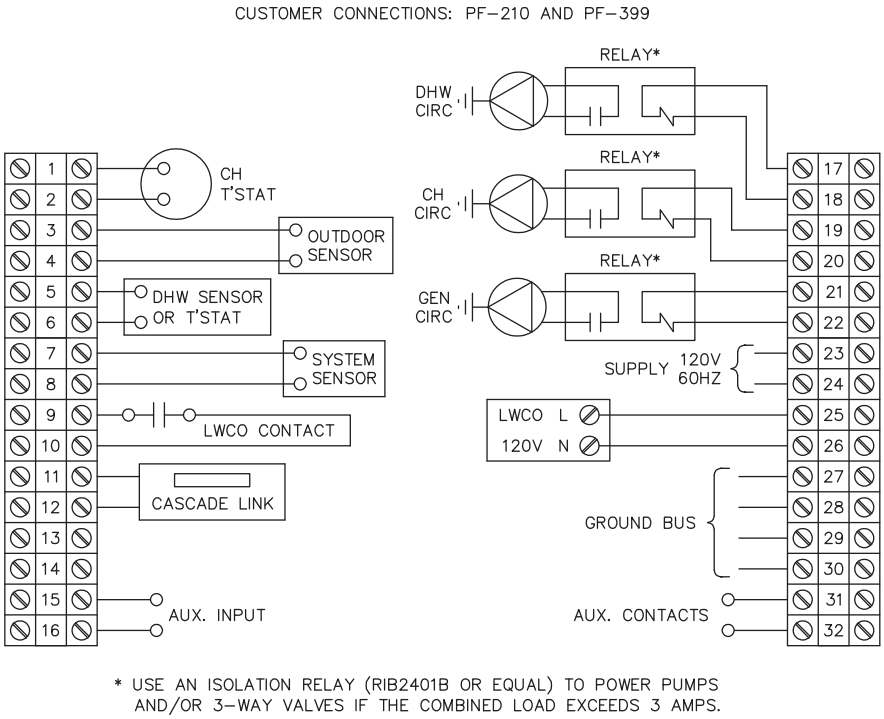

Figure 7.3: Customer Connections – PF-210 & PF-399

f. Terminals 27 through 30 are a ground bus for any line voltage ground connections.

g. Terminals 31 & 32 are not yet active.

5. Note that the service switch does not disconnect power to the convenience outlet.

C. ZONE CIRCULATOR WIRING

Wiring for a typical circulator zone relay is shown in Figure 7.4.

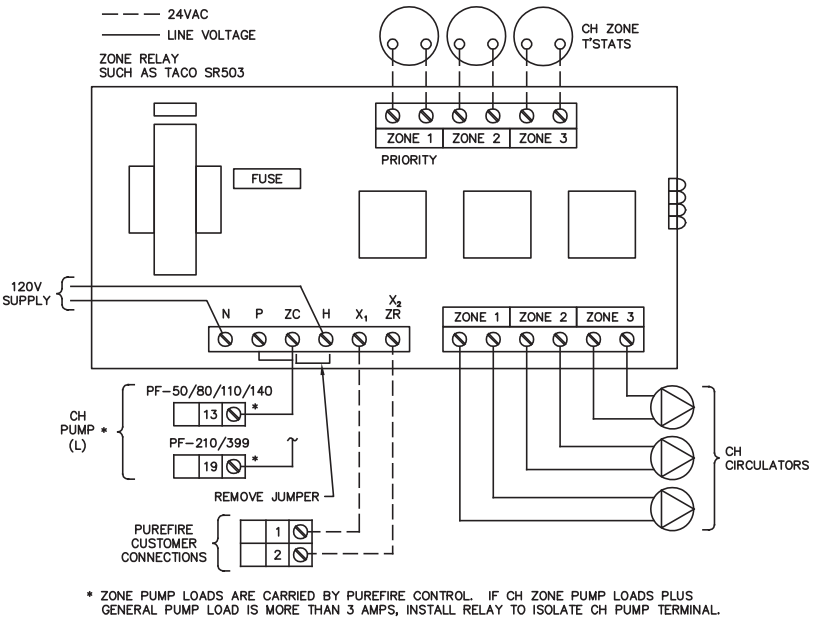

Figure 7.4: Typical Zone Circulator Relay Wiring

D. INTERNAL WIRING

Figure 7.5 shows the complete boiler wiring schematic for PF-50, PF-80, PF-110 and PF-140 boilers. Figure 7.6 shows the schematic for the PF-210 and PF-399 boilers. The following is a list of internal wiring components.

1. *User Interface*: The user interface is attached to the front of the electrical junction box and is accessible by removing the tinted lens on the front of the boiler. This interface allows users and installers to communicate with the control.

2. *Supply Sensor/Limit Switch*: This component, located on the left header is a thermistor that provides temperature information to the control. Also incorporated into this component is a high temperature limit switch that will prevent the boiler from operating if the supply water temperature is above 195°F (91°C). Be sure to use only a *PureFire®* supply thermister for this boiler.

3. *Return Sensor*: This thermistor is also located on the left header toward the rear of the boiler. It provides return temperature information to the control. Be sure to use only a *PureFire®* return thermistor for this boiler.

4. *Flue Sensor*: This thermistor provides flue temperature information to the control. It is located in the back of the electrical junction box behind the user interface.

5. *Condensate Drain Float Switch*: This switch is mounted in the condensate collector below the heat exchanger in the rear of the cabinet.

6. *Service Switch*: The service switch interrupts the power to the *PureFire®* boiler to allow service to be performed.

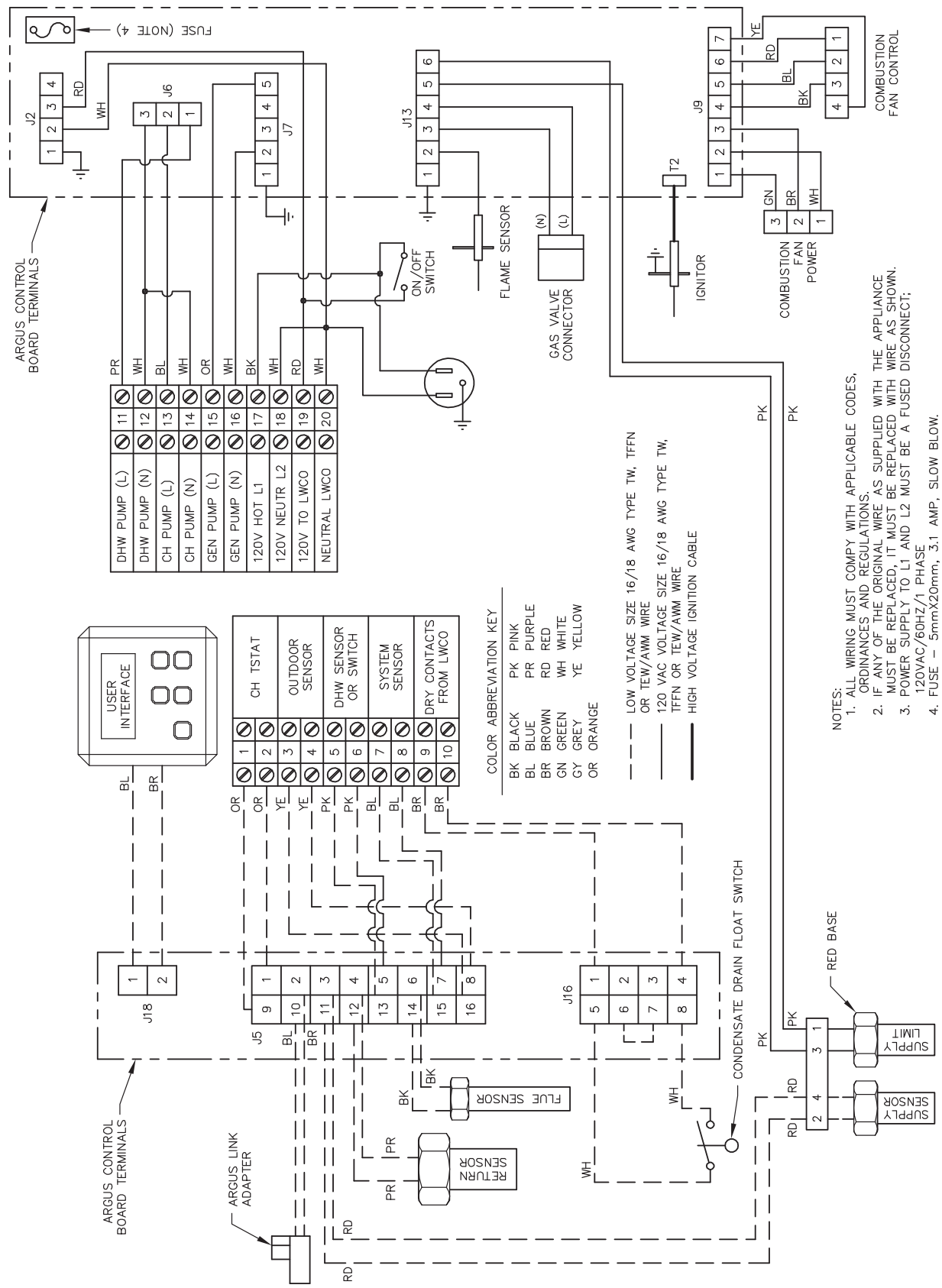

Figure 7.5: Internal Wiring Schematic for PF-50, PF-80, PF-110 & PF-140 boilers.

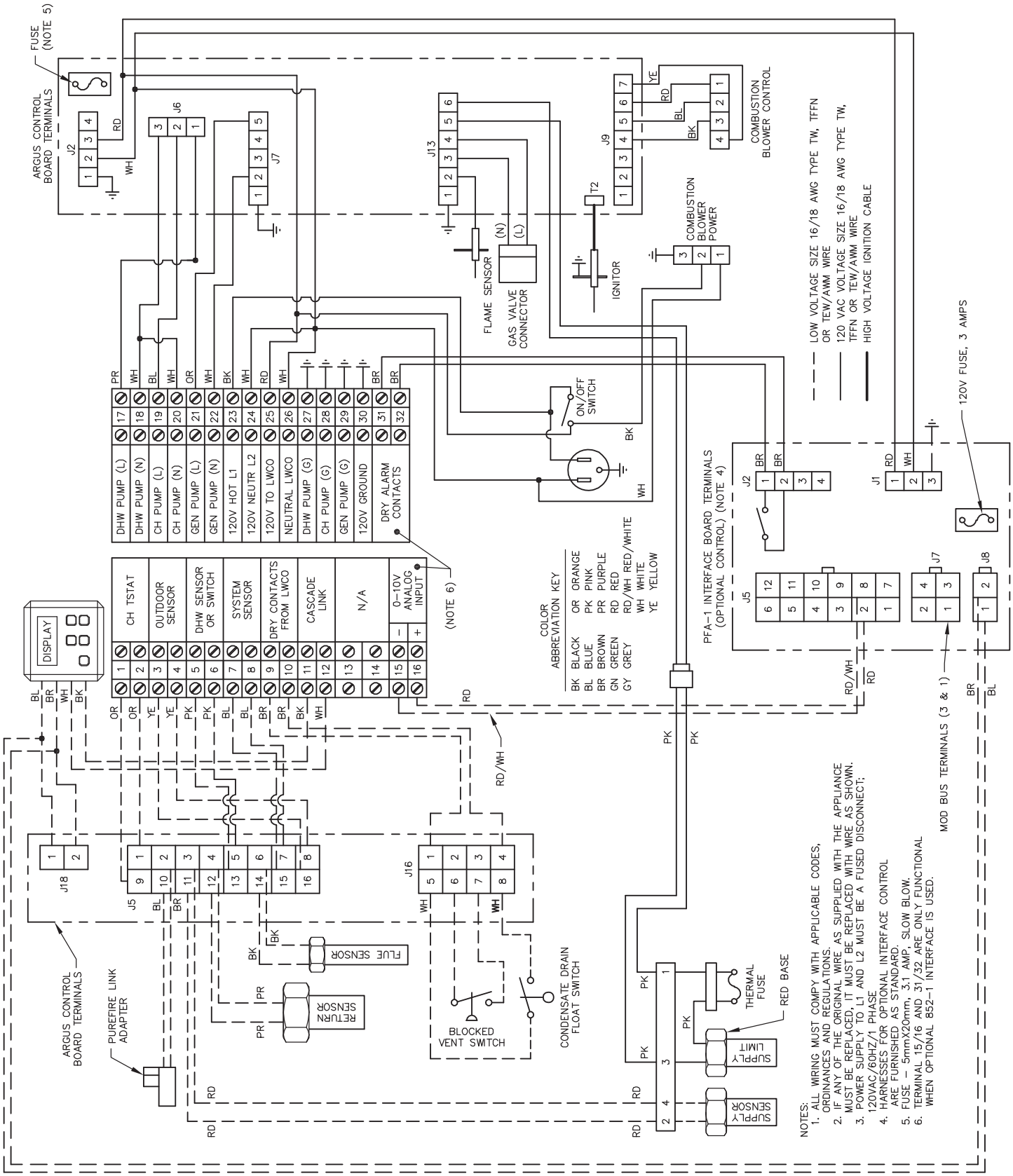

Figure 7.6: Internal Wiring Schematic for PF-210 & PF-399 boilers.

7. *Convenience Outlet*: The convenience outlet is provided for a condensate pump during operation. It is not switched with the service switch to allow its use for lighting during maintenance.

8. *Flame Sensor*: The flame sensor uses the principal of flame rectification to sense the burner flame. This is located on the right side of the heat exchanger front plate. After ignition, the control also senses flame through the ignition electrode.

9. *Gas Valve*: The gas valve is connected through a special cord and connector. The connector is attached to the valve with a screw.

10. *Ignition Electrode*: This electrode is located on the left side of the heat exchanger front plate. A 10,000 volt charge is initiated by the control to provide a spark for lighting the burner. After the burner lights, and no spark is present, the control uses this electrode as a second source of flame detection.

11. *Combustion Air Fan*: The combustion air fan has two connections. There is a 120 volt power connection (3-wire) and a low voltage control connection (4-wire).

12. *Relay*: A relay is provided in the PF-210 & PF-399 to allow the installer to provide a signal to the priority zone of a zone controller to prevent CH zones from being activated when a call for DHW is present.

8. BOILER CONTROL: INTERNAL WIRING & OPERATION

A. CONTROL OVERVIEW

The *PureFire*® boiler control is one of the primary safety devices for the boiler. It controls the ignition sequence, temperature limits, circulators and gas flow to the boiler. It also provides many unique features.

The control provides 7 central heating modes and 3 domestic hot water modes. In addition, the boiler can be adapted to several different piping schemes using the 4 different pump modes.

To provide maximum flexibility, several special features are also included.

1. **Central Heating (CH) Modes:**
   The *PureFire*® boiler control allows the installer to choose from several different central heating modes. The following table shows the central heating modes. In addition, the table shows the display text associated with each CH mode and a brief description of the operation.

2. **Domestic Hot Water (DHW) Modes:**
   The *PureFire*® boiler control also allows the installer to choose from three different DHW modes.

3. **Pump Modes:**
   The *PureFire*® boiler allows three different pump modes to give the installer flexibility in piping arrangements.

Table 8.1: Central Heating Modes

CH Mode	Display Text	Brief Description	Detail Section	Page
0	Indoor Thermostat	Call-for-Heat signal from thermostat with user selected boiler supply target set-point temperature.	8.D.1	42
1	Thermostat and Outdoor Reset	Call-for-Heat signal from thermostat with boiler supply target temperature calculated using outdoor temperature.	8.D.1	42
2	Permanent Demand and Outdoor Reset	Continuous heat demand with boiler supply target temperature calculated using outdoor temperature. Thermostat input used for setback.	8.D.1	42
3	Permanent Demand	Continuous heat demand with user selected boiler supply target temperature. Thermostat input used for setback.	8.D.1	42
4	0-10 V Input to modulate Setpoint	Requires PFA-1 Interface Adapter. Allows 0-10 volt input from an external source (ie. building management system) to change setpoint temperature.	8.D.1	42
5	0-10 V Input to modulate Rate	Requires PFA-1 interface Adapter. Allows 0-10 volt input from an external source (ie. boiler sequencing control) to change input firing rate.	8.D.1	43
6	Hydro-Air Unit	Call-for-Heat signal from a thermostat with user selected supply target setpoint temperature optimized for hydro-air heating system.	8.D.1	43

Table 8.2: Domestic Hot Water (DHW) Modes

DHW Mode	Display Text	Brief Description	Detail Section	Page
0	No DHW	No domestic hot water tank is used.	8.E.1	45
1	DHW store with sensor	The domestic hot water tank is equipped with a temperature sensor. The *PureFire*® control modulates the boiler firing rate based on tank temperature.	8.E.1	45
2	DHW store with thermostat	The domestic hot water tank is equipped with a thermostat. The *PureFire*® control responds to the demand from the thermostat and modulates the boiler firing rate targeting the DHW boiler setpoint.	8.E.1	46

Table 8.3: Pump Modes

Pump Mode	Display Text	Brief Description	Detail Section	Page
0	DHW or CH & DHW pump	The General pump is on when the CH pump runs on CH demand. The DHW pump runs on DHW demand. Either the CH or DHW pump runs; they never run at the same time.	8.C.1	40
1	General pump with 3-way valve	The General pump is always on when burner is on. A line voltage (120 VAC) 3-way valve is operated to supply water to the DHW tank.	8.C.1	41
2	Manifold with pump for DHW	The General pump is always on when the burner is on. The CH pump runs on CH demand. The DHW pump runs on DHW Demand. Either the CH or DHW pump runs; they never run at the same time.	8.C.1	41

4. **Special Features:**
   The *PureFire*® control offers several special features to give the installer options in setting up the boiler. These options are shown in the following table.

Table 8.4: Control Features

Feature	Brief Description	Detail Section	Page
System Response Time*	Allows the installer to adjust the response time of the burner modulating control.		
Cascade*	Multiple boilers operate together in order to satisfy the heating or DHW demand.	8.J	48
One Hour Retry*	One hour after a lockout on ignition or flame failure, the *PureFire*® control will reinitiate boiler operation.	10.B.4	57
Restore System Defaults*	Allows the installer to reset all parameters to the factory defaults if desired. The installer can also save and restore site defaults.	8.K	53
Adjustable Blower Postpurge*	This feature allows the installer to increase the blower postpurge to counteract the effects of high winds or unusual wind currents.	8.C.4	42
Flame Signal Log*	This troubleshooting tool captures the flame signal at four increments during the two second flame proving period. This can help installers/service personnel to quickly diagnose problems with flame rectifications.	10.B.5	57
Freeze Protection	Activates pumps if temperatures fall below the specified value. If the temperatures continue to fall, the boiler is activated.	8.C.3	42
DHW Tank Warm Hold	Prevents boiler from ramping up to high power if the DHW demand is only to keep the tank warm.	8.E.3	46
Ramp Delay Step Modulation	This feature is used to prevent short cycling in systems using very small zones. The input rate is gradually increased from 20% to 100% over 2 minutes. When used, this only effects central heating operation.	8.D.4	44
Add'l Safety Functions	Allows the installer to choose between a low water cutoff and a flow switch for water level safety shutdown.	8.C.5	42
Vent Temperature Safety Limit	Reduces the firing rate if the vent temperature approaches the maximum limit of the vent material. If the vent temperature continues to climb, the *PureFire*® control will shut down the boiler.	8.C.2	42
Outdoor Reset	The *PureFire*® control changes the boiler supply target temperature to compensate for changes in load due to milder outdoor temperatures. This increases the efficiency of the boiler and is more comfortable.	8.D.3	43
System Type Presets*	By choosing the heat distribution type (finned tube baseboard, hydro air, cast iron radiators, cast iron baseboard, low mass radiant or high mass radiant) the installer can automatically select practical boiler design and mild weather temperatures.	8.D.3	43
Temperature Boost	The temperature boost function increases the boiler supply target to recover more quickly from setback conditions.	8.D.3	44
Warm Weather Shutdown	The *PureFire*® control will shut down the boilers CH functions if the outdoor temperature is above an installer defined maximum. This prevents the boiler from running during warm weather.	8.D.3	44
Anti-Cycling	The anti-cycling function prevents rapid on/off cycling of the boiler. This includes an override function to be sure that all loads are satisfied.	8.D.4	44
Limited DHW Priority	The *PureFire*® control provides DHW priority for boiler operation. However, the control will automatically switch between CH and DHW loads after an installer determined switch time.	8.E.2	46
DHW Heat Dump	If enabled, the DHW heat dump function serves to dump heat from the boiler system to the DHW tank after a CH demand has ended.	8.E.4	46
Service Notification	If enabled, the *PureFire*® control will display a service notification after an installer defined number of hours or cycles. It can also display a notification based on a date of the installers choosing.	8.F	46
System Test	The *PureFire*® boiler will allow the installer to operate the boiler at low power, high power and ignition input for troubleshooting purposes.	8.G	47
Fault History	The *PureFire*® control allows service personnel to access the last 15 Blocking Errors and the last 15 Lockout Errors in addition to records of the interval between Errors.	8.H.3	47

*New feature

B. IGNITION SEQUENCE

Figure 8.1 shows the ignition sequence for the *PureFire®* boiler control. Table 8.4 describes each step in the sequence in detail. The *PureFire®* boiler control provides dual sensing of the flame to maximize the reliability. The control senses the burner flame with both the flame sensor and the ignition electrode.

Igntion Cycle

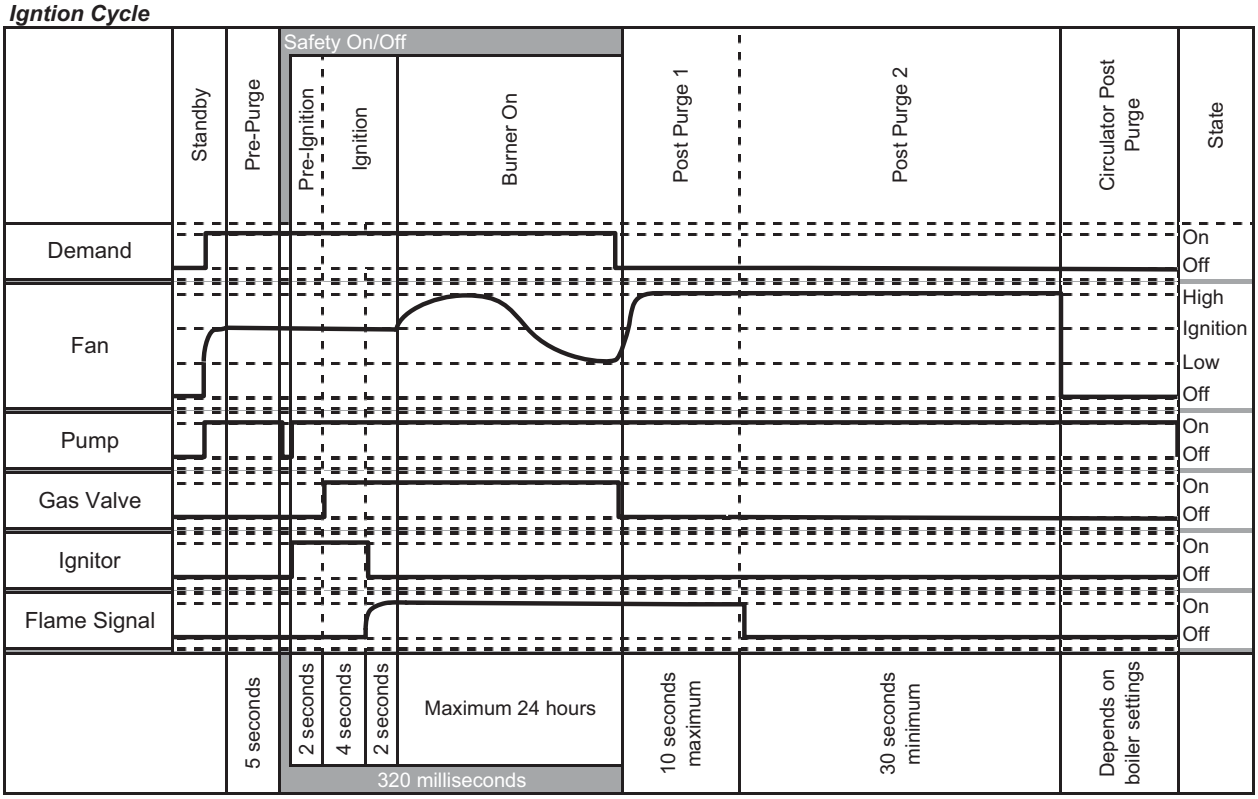

Figure 8.1: Ignition Cycle – Graphical Representation

Table 8.5: Ignition Sequence

Period	Demand Status	User Interface Display
Standby	No demand is present	16:36 STANDBY 160°F
	If the power is on to the *PureFire®* boiler and there is no heat demand, the user interface will display "Standby" and show the boiler supply temperature in the lower right corner. The time, in 24 hour format, is shown in the upper right. When a heat demand (either CH or DHW) is present, the boiler begins the ignition cycle.	
Pre Purge	A CH or DWH demand must be present to initiate ignition. Once initiated the boiler will light.	16:36 CENTRAL HEATING Trial For Ignition
	When a demand is present, the *PureFire®* control starts the combustion air fan. The fan speed then increases to ignition speed and the user interface displays the Source of the call for heat along with "Trial for ignition." This screen is displayed until the burner is lit and stable or until a fault occurs. Once the ignition sequence begins it will continue through ignition even if the demand has ended.	

Period	Demand Status	User Interface Display
Safety On/Off	A heat demand has no influence in the Safety On/Off period. The Safety On/Off step will continue even if the demand has ended.	16:36 DOMESTIC HOT WATER Trial For Ignition
	This step very quickly opens and closes the gas valve relays and determines if the control is operating correctly. The CH pump is turned off during this test.	
Pre-Ignition	A heat demand has no influence in the Pre-Ignition period.	16:36 CENTRAL HEATING Trial For Ignition
	Once the internal check is complete, the control begins a Pre-Ignition sequence. The igniter is energized while the gas valve remains off. If a flame is detected at the end of the pre-ignition period a lockout will occur.	
Ignition	A heat demand has no influence in the Ignition period.	The following displays occur on ignition failure only. 16:36 CENTRAL HEATING Ignition Retry 16:36 NO IGNITION Fan Post Purge
	The igniter remains energized for the first 4 seconds of the Ignition period. For the final 2 seconds of the Ignition period, the igniter is turned off and the control checks for a flame signal through both the ignition electrode and the flame sensor. If no flame signal is present at the end of the Ignition period, the control initiates a post-purge and then begins the ignition cycle again. If there are three consecutive ignition failures, the control will post purge and lockout. The control records 4 flame signal values during the final 2 seconds of this period that can be accessed from the installer status menu. The control will retry ignition one hour after an ignition failure lockout.	
Burner On	A heat demand must be present for the control to stay in this period.	16:36 CENTRAL HEATING 100%Input 160°F
	Once the flame signal is established, the burner will run until the demand is satisfied, the setpoint is exceeded, or a blocking error occurs. The maximum run period for the burner is 24 hours. If the boiler runs continuously for 24 hours, the control will override the demand and turn off the burner. After this a restart will occur and the burner will continue to run.	
Post Purge 1	After the Post Purge period begins, a heat demand will be ignored until after this period.	The following screen is displayed when the demand has ended. 16:36 CENTRAL HEATING Fan Post Purge
	During post purge 1, the control monitors the flame signal to be sure that the flame has extinguished. If a flame is detected after the maximum 10 second time period, a control lockout will occur.	
Post Purge 2	During this period a heat demand has no effect on operation.	The following screen will be displayed if the supply temperature exceeds the target setpoint. 16:36 SUPPLY AT SETPOINT Fan Post Purge
	During this period, the combustion air fan runs at high speed to purge combustion gases from the heat exchanger. The default fan post purge period is 30 seconds. It is adjustable up to 120 seconds.	
Pump Purge	No heat demand is present.	16:36 CENTRAL HEATING Circulator ON
	The operation of the circulators and the boiler depend on the pump mode and the heat demand status.	

C. BOILER CONTROL

1. **Pump Modes:**
   The *PureFire*® control enables the installer to choose from 3 different pump modes depending on the installation. Table 8.3 provides a brief overview of the 3 available pump modes. The following are detailed explanations of the pump modes.

   Pump Mode 0 – CH or CH&DHW Pump:
   This mode is intended for a single heating zone with, or without, a DHW tank. Figure 8.2 shows typical piping for a single zone without DHW. Figure 8.3 shows typical piping for a single zone with DHW.

   In this case, circulation through the boiler is to be provided by the CH pump when in a central heating mode. When satisfying a DHW demand, the circulation through the boiler is provided by the DHW pump.

Figures 8.2 & 8.3 both show the electrical connections from the boiler to the circulators. Either the CH pump or the DHW pump can be energized but they can never run simultaneously.

⚠ NOTICE

The CH and DHW circulator must be sized correctly to provide the minimum flow required through the boiler. If the boiler is not piped primary/secondary do not rely on the pump recommendations in Section 4, Water Piping.

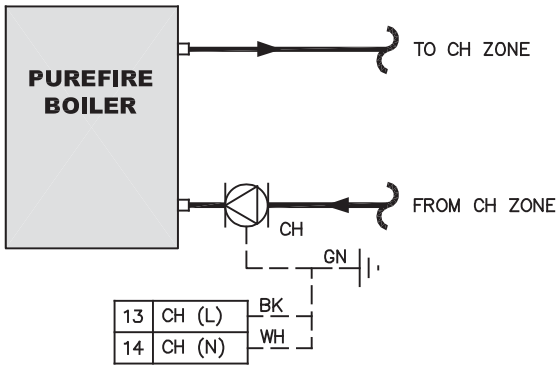

Figure 8.2: Pump Mode = 0, 1, or 2, DHW Mode 0

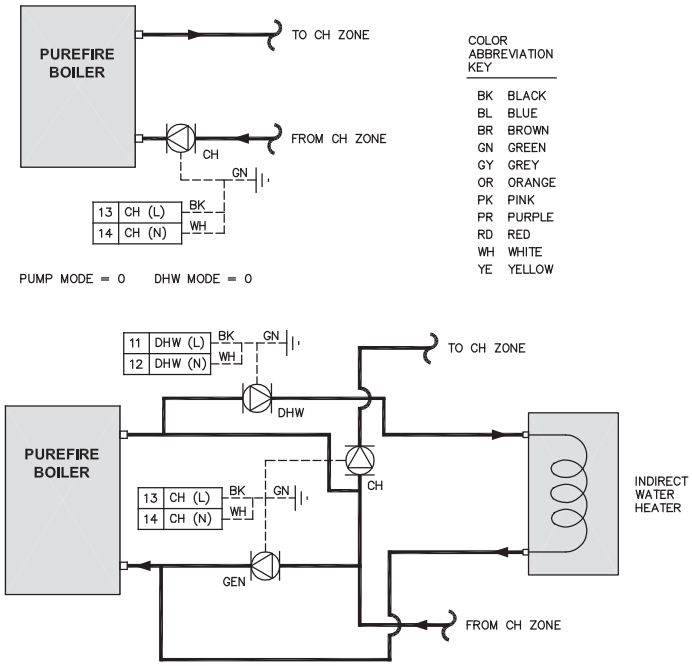

Figure 8.3: Pump Mode = 0, DHW Mode = 1 or 2

Pump Mode 1 – General Pump with 3-Way Valve: Mode 1 allows the boiler to be installed with a three way valve which diverts water from the boiler supply connection to either central heating or domestic hot water. Figure 8.2 shows typical piping for Pump Mode 1 without a DHW tank and Figure 8.4* shows typical piping with a DHW tank.

*as revised.

In this mode, the general pump always runs when the boiler is operating. The three-way valve always direct the water toward the DHW tank when no heat demand is present.

Pump Mode 2 – Manifold with Pump for DHW: Mode 2 is intended for use with primary/secondary piping or other hydraulic separation. Figure 8.2 shows typical piping for Pump Mode 2 for central heating only and Figure 8.5 shows typical piping for central heating with a DHW tank.

This mode is preferred if multiple heating zones are used. The general pump operates to assure proper flow through the boiler at all times.

Like mode 1, the general pump always runs when the boiler is operating. The Ch pump provides circulation to CH zones and the DHW pump provides circulation to the DHW tank.

The figures also show the electrical connections from the pumps to the boiler terminals.

In this mode, the general pump always runs when the boiler is operating. The three way valve always directs the water toward the DHW tank when a heat demand has ended.

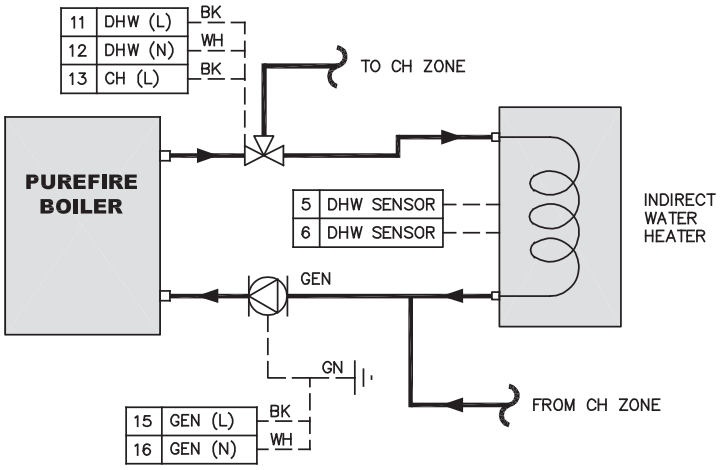

Figure 8.4: Pump Mode = 1, DHW Mode = 1 or 2

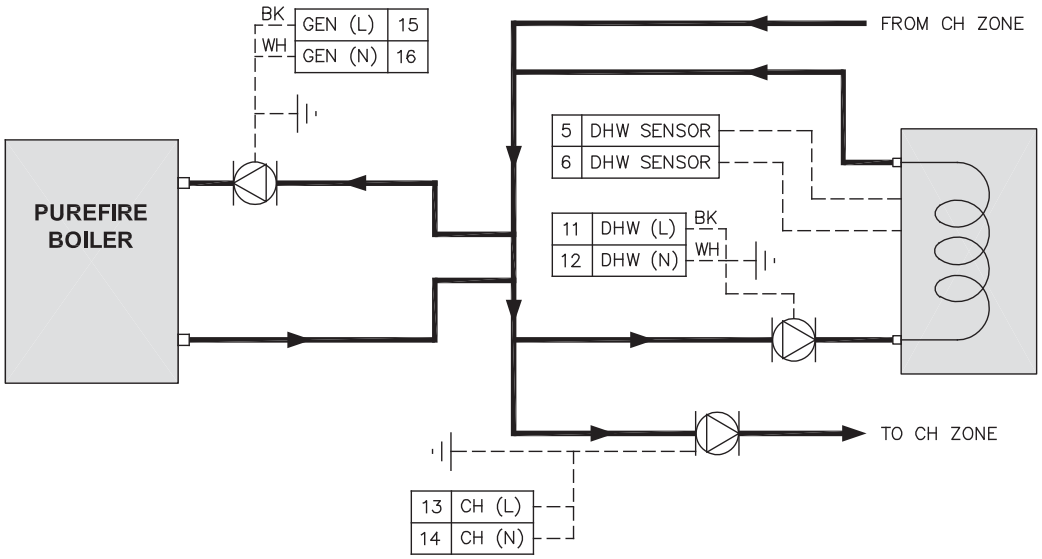

Figure 8.5: Pump Mode = 2, DHW Mode = 1 or 2

2. **Installation Location & Vent Material:**
The *PureFire*® boiler allows the installer to input the installation location and the vent material used. This information is used to determine the suitable vent temperature limit based on National Codes. Table 8.6 shows the vent temperature limit based on the location and vent material.

Table 8.6: Vent Temperature Limits

Vent Limit Temperature		
Vent Material	Location	
	U.S.A.	Canada
PVC	190°F (80°C)	149°F (65°C)
CPVC	230°F (110°C)	190°F (80°C)
PP(s)	230°F (110°C)	230°F (110°C)

The *PureFire*® control will reduce the boiler firing rate if the vent temperature approaches the vent temperature limit. If the vent temperature continues to rise, the control will shut down the boiler.

3. **Freeze Protection:**
The *PureFire*® boiler control is intended to prevent the central heating system from freezing. The default temperature to activate this function is 50°F (10°C).

If the supply temperature drops to below the freeze protection setpoint, the general pump and/or the CH pump (depending on pump mode) will be activated. If the supply or return temperature drops more than 9°F (5°C) below the setpoint, the control lights the boiler using the ignition sequence described in section 8.B.

The control will operate the burner at minimum power until the both the supply and return boiler temperature are more than 9°F (5°C) above the freeze protection setpoint.

While this function is active the interface panel will display the following:

```
                    16:36
CENTRAL HEATING
Freeze Protection
  1% Input        160°F
```

4. **Blower Postpurge Time:**
The *PureFire*® boiler control allows the installer to change the burner postpurge timing. This is useful under extreme conditions where high winds and unusual wind currents prevent proper purging of the combustion chamber.

This parameter is adjustable from 30 seconds to 120 seconds with the 30 second minimum as its default. It is important to note that increased purge times may slightly reduce the boiler efficiency.

5. **Additional Safety Functions:**
The *PureFire*® boiler control is equipped with terminals for either a low water cutoff or a flow switch. The low water cutoff option is the factory default and a factory supplied jumper is installed. This jumper is to be removed if a low water cutoff or flow switch is installed.

Low Water Cutoff: The installer can connect the power supply wires for a probe-type low water cutoff to terminal #19 (Hot) and #20 (Neutral) in the main terminal box. The contacts should be wired to terminals #9 and #10.

Flow Switch: If a flow switch is used, simply wire the contacts to terminals #9 and #10 in the main terminal box.

D. CENTRAL HEATING

1. **Heating Modes:**
Table 8.1 provides an overview of the central heating (CH) modes. The following are detailed descriptions of the operation of these modes:

Mode 0 – Indoor Thermostat: This is the default mode for the control. When this mode is selected, the control starts the boiler in response to a demand from the indoor thermostat. The boiler will target the User selected setpoint each time there is a heat demand. In this case, the outdoor thermostat is not required.

Mode 1 – Thermostat and Outdoor Reset: In this mode, the control uses the outdoor temperature to calculate a target for the boiler setpoint.

The installer selects design temperatures and mild weather temperatures on the installer menu. The control then calculates a target supply temperature based on the current outdoor temperature.

A detailed explanation of Outdoor Reset is provided in section 8.D.3.

Mode 2 – Permanent Demand and Outdoor Reset: In this mode, the boiler control operates on a permanent demand independent of room thermostats. The boiler is held at a target supply temperature calculated using the current outdoor temperature. In this mode, a contact closure across terminals #1 and #2 (CH T'Stat) will result in an 18°F temperature setback. This can be used in conjunction with a timer or switch for night or unoccupied setback periods. A detailed explanation of Outdoor Reset is provided in section 8.D.3.

Mode 3 – Permanent Demand: Mode 3 is similar to Mode 2 except that the boiler target is a constant user defined setpoint. Again, a contact closure across terminals #1 and #2 (CH T'Stat) will result in an 18°F temperature setback.

Mode 4 – 0-10 V Input to Modulate Setpoint: This feature requires the use of the PFA-1 Interface Adapter kit (54271). With this adapter, this mode allows the boiler setpoint to be controlled by an external source using a 0-10 VDC analog signal. An input of 2 volts is required to activate the call for heat. With an input voltage of 2 volts, the setpoint temperature will be 50°F and an input of 10 volts corresponds to a setpoint of 195°F. The setpoint is proportional between these values.

This mode is commonly used in conjunction with a Building Management System (BMS) to control the boiler setpoint based on the building requirements.

Mode 5 – 0-10 V Input to Modulate Firing Rate: This feature also requires the use of an optional PFA-1 Interface Adapter kit (54271). With this adapter, this mode allows the boiler input firing rate to be controlled by an external source using a 0-10 VDC analog signal. In this case, voltages below 2.0 volts DC prevent the boiler from operating. An input voltage of 2 volts will cause the boiler to operate at it minimum input (1% modulation) and 10 volts will cause the boiler to operate at maximum (100% modulation). Between these points, the input rate will be proportional. Note that the boiler high limit is set at 210°F and will cause a lockout if this temperature is reached.

Mode 6 – Hydro-Air Unit: This mode is specifically for boilers supplying hot water to a hot water coil in a forced air heating system using a User defined boiler target setpoint temperature.

This mode is nearly identical to Mode 1 except that the response parameters are adjusted differently. The boiler control targets the setpoint temperature and modulates based on this temperature.

2. **Setpoint operation:**
When operating in CH mode 0, 3 or 6 the user can select a target temperature for the boiler supply. The control modulates the boiler based on three conditions: 1) The difference between the current supply temperature and the target; 2) The speed with which the supply temperature increases; and 3) The speed at which the system reacts to the temperature increase.

When the boiler supply temperature approaches the target setpoint, the burner will modulate down to decrease the input. If the temperature begins to decrease, the control will increase the input rate.

3. **Outdoor Reset Operation:**
To maximize fuel savings, *PureFire*® boilers are factory equipped for outdoor reset operation. The following describes the operating principal of this feature.

***Operating Principle*:**

- Heat Loss decreases as Outdoor Temperatures increases.
- Heat distribution system is sized for Design Conditions (Coldest Outdoor Temperature).
- Boilers operate more efficiently at lower water temperatures.
- Condensing boilers have no minimum return water temperature.

The integrated control system on the *PureFire*® boiler adjusts the boiler supply setpoint based on outdoor temperature. In the installer menu, under "CH Settings" there are two parameters that define the design point of the boiler. The design point represents the conditions for which the boiler was sized.

Boiler Design Temperature: The boiler supply temperature required to heat the building under its design load is called Boiler Design Temperature. For example, if the building was designed with copper finned tube baseboard with 180°F water, this is the design temperature that should be entered. The factory default for the Boiler Design Temperature is 180°F (82°C).

Outdoor Design Temperature: The outdoor design temperature is the outdoor temperature used to calculate the heat loss of the building to determine the maximum heat load.

Commonly used values for this can be found in Table 8.7 for many North American Cities. The factory default for this setting is 0°F (-18 °C).

Mild Weather Boiler Temperature: This is the temperature required to heat the building under a minimum load. Table 8.8 shows recommended values for this temperature setting.

The default for this is 70°F (21°C). However, depending on the type of heat distribution used, this value should be increased.

For example, if the boiler targets 70°F when a kick space heater or unit heater is used, the heating unit is likely to supply cold air if there is no thermostat to prevent it from running.

Mild Weather Outdoor Temperature: This is the outdoor temperature at which the boiler should operate at its minimum heat load. The default value for this is 70°F (21°C).

***Example*:**

Figure 8.9 shows how the Design Point and the Mild Weather Point define a line used to calculate boiler supply temperature based on outdoor temperature.

The design point is shown for an outdoor design temperature of 0°F and a boiler design supply temperature of 160°F. The mild weather point is shown for an outdoor temperature of 70°F and a boiler supply temperature of 95°F.

From this, the *PureFire*® control calculates a boiler supply temperature of 130°F when the outdoor temperature is 32°F.

System Type Presets: The *PureFire*® Control allows the installer to select preset values for Boiler Design Temperature and Mild Weather Boiler Temperature based on the type of heat distribution used. Table 8.7 shows the system types and the corresponding boiler temperatures.

Table 8.7: System Type Presets

System Type	Temperatures	
	Boiler Design	Mild Weather Boiler
1. Finned Tube Baseboard	180	140
2. Hydro Air Unit	190	140
3. Cast Iron Radiator	160	120
4. Cast Iron Baseboard	150	110
5. Low Mass Radiant	140	70
6. High Mass Radiant	120	70
7. User Defined (Default)	180	70

Type #7 is designated user defined and shows the default boiler temperatures. Once this choice is selected, the installer can change the numbers as desired.

Boiler Minimum: The boiler minimum is a value that is used to limit the minimum temperature that the boiler can target as a supply setpoint.

This is useful if the boiler is used in conjunction with fan coil units, kick space heaters, unit heaters or other instances where a low boiler supply temperature can cause uncomfortable conditions.

Boiler Maximum: If the boiler is connected in a situation where a temperature that is too high can cause damage to tubing or floors, this will limit the maximum temperature that can be achieved.

Unlike the boiler design temperature, the control will not let the boiler run if the supply is at this temperature.

The default for this temperature is 180°F (82°C).

Boost Function: The boost function increases the boiler supply target temperature by the value, "Temp", if the demand is not satisfied in the value, "Time." Both of these values are selected by the installer.

The default for these values are as follows:
Temp = 18°F and Time = 20 minutes.

This function is designed to help the boiler recover from a setback condition. It will also help if too low of a value is chosen for the boiler design and/or mild weather temperature.

This value will continue to increase by the Temp value if the demand continues through consecutive Time periods.

The value is allowed to exceed the design temperature but can never exceed the boiler maximum temperature.

Warm Weather Shutdown: In any CH mode utilizing outdoor reset, the warm weather shutdown feature prevents the boiler from operating if the outdoor temperature exceeds the selected temperature. The default value for this function is 70°F (21°C).

4. **Other Features:**
Pump Post Purge: The *PureFire®* control allows the installer to set post purge times for the CH and/or General Pumps. The circulator will continue to run for the time selected after the call for heat has ended.

These values are settable from 0 to 900 seconds and the factory default is 60 seconds.

Ramp Delay Step Modulation: This feature is useful for systems with very small zones which can cause a boiler to short cycle. The Ramp Delay Step Modulation function only applies to Central Heating and is not applied to DHW demands.

After the ignition sequence, the control modulates down to 20% of input. Then the input rate is gradually increased until the supply temperature approaches its target. At this time, the control modulates normally.

Anti-Cycling: The *PureFire®* boiler control allows the installer to set a minimum off time to prevent short cycling of the boiler. This only affects short cycling due to reaching the temperature limit setpoint. If the CH or DHW demand cycles, the control will cycle to match the demand.

"The minimum off time can be set from 0 to 15 minutes in 1 minute increments. It has a default of 3 minutes.

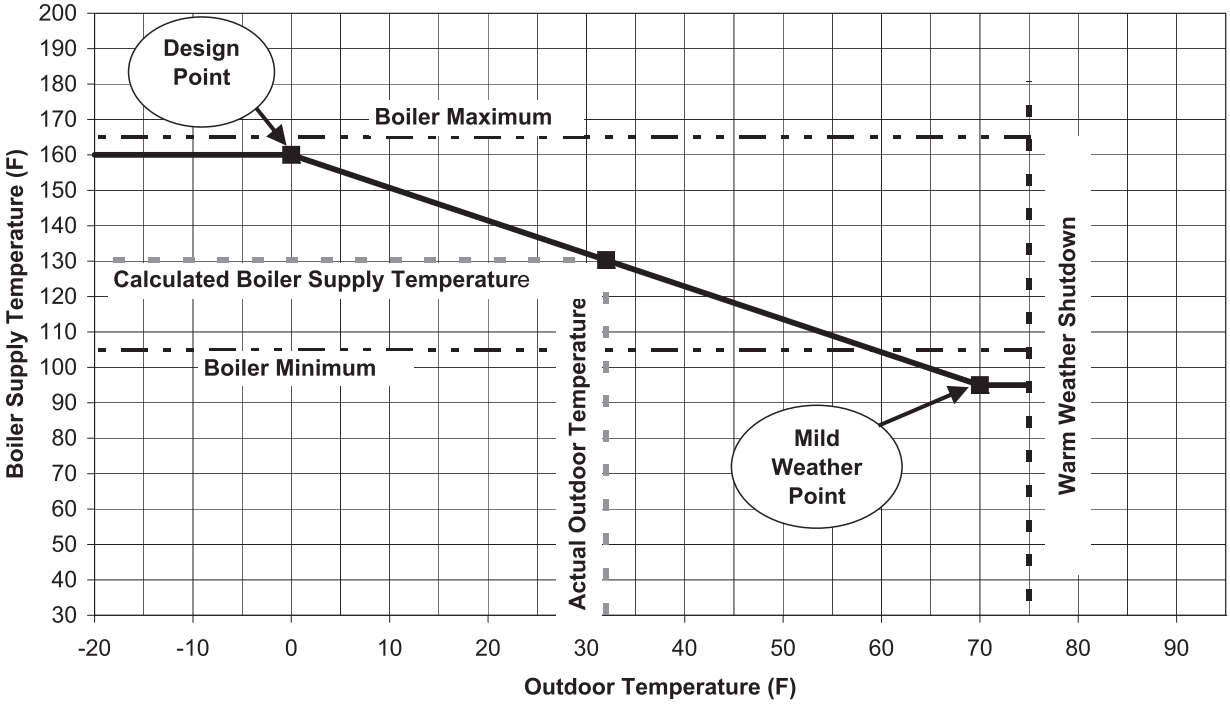

Figure 8.6: Outdoor Reset Operation

Table 8.8: Outdoor Design Temperature (ODT) – U.S. Cities

City	State	ODT		City	State	ODT		City	State	ODT	
Mobile	AL	29°F	-2°C	Springfield	IL	2°F	-17°C	Albuquerque	NM	16°F	-9°C
Anchorage	AK	-18°F	-28°C	Indianapolis	IN	2°F	-17°C	New York City	NY	15°F	-9°C
Juneau	AK	1°F	-17°C	Des Moines	IA	-5°F	-21°C	Rochester	NY	5°F	-15°C
Flagstaff	AZ	4°F	-16°C	Wichita	KS	7°F	-14°C	Greensboro	NC	18°F	-8°C
Tucson	AZ	32°F	0°C	Bowling Green	KY	10°F	-12°C	Fargo	ND	-18°F	-28°C
Little Rock	AR	20°F	-7°C	New Orleans	LA	33°F	1°C	Columbus	OH	5°F	-15°C
Fayetteville	AR	12°F	-11°C	Bangor	ME	-6°F	-21°C	Tulsa	OK	13°F	-11°C
Sacramento	CA	32°F	0°C	Portland	ME	-1°F	-18°C	Portland	OR	24°F	-4°C
San Diego	CA	44°F	7°C	Baltimore	MD	13°F	-11°C	Philadelphia	PA	14°F	-10°C
San Francisco	CA	38°F	3°C	Boston	MA	9°F	-13°C	Pittsburgh	PA	5°F	-15°C
Boulder	CO	8°F	-13°C	Springfield	MA	0°F	-18°C	Charleston	SC	28°F	-2°C
Denver	CO	1°F	-17°C	Detroit	MI	6°F	-14°C	Sioux Falls	SD	-11°F	-24°C
Hartford	CT	7°F	-14°C	Marquette	MI	-8°F	-22°C	Dallas	TX	22°F	-6°C
Waterbury	CT	2°F	-17°C	Minneapolis	MN	-12°F	-24°C	Salt Lake City	UT	8°F	-13°C
Wilmington	DE	14°F	-10°C	Jackson	MS	25°F	-4°C	Burlington	VT	-7°F	-22°C
Orlando	FL	38°F	3°C	St. Louis	MO	6°F	-14°C	Richmond	VA	17°F	-8°C
Tallahassee	FL	30°F	-1°C	Billings	MT	-10°F	-23°C	Seattle	WA	27°F	-3°C
Atlanta	GA	22°F	-6°C	Omaha	NE	-4°F	-20°C	Spokane	WA	2°F	-17°C
Boise	ID	10°F	-12°C	Carson City	NV	9°F	-13°C	Morgantown	WV	8°F	-13°C
Idaho Falls	ID	-6°F	-21°C	Manchester	NH	-3°F	-19°C	Green Bay	WI	-9°F	-23°C
Chicago	IL	-4°F	-20°C	Atlantic City	NJ	13°F	-11°C	Cheyene	WY	-1°F	-18°C

The value for "TDiff" is the difference in temperature between the supply temperature and the target temperature that will override the minimum off time. This temperature difference indicates the presence of a substantial heat load."

The default value for TDiff is 30°F and can be set to values between 20°F and 40°F. TDiff can also be disabled by choosing "Off". To do this push the down arrow until "Off" is displayed.

Warm Weather Shut Down: The *PureFire*® control will prevent the boiler from operating if the outdoor temperature is above the temperature chosen by the installer. This helps to prevent wasting fuel if windows are open and the indoor temperature drops below the thermostat value. This function can be activated in either setpoint or outdoor reset CH modes as long as the outdoor sensor is attached. This only affects CH demands. The boiler will continue to operate for DHW loads regardless of outdoor temperatures.

Maximum CH Input Limit: The *PureFire*® control allows the installer to limit the maximum input of the boiler under a CH load if desired. This can be used when the boiler is sized primarily for a DHW load and is oversized for the CH load. This can be set between 50% and 100% and the default is 100%.

CH Response Time: This feature allows the installer to adjust the response time of the boiler. The "I" value is adjustable from 15 to 100 with 15 providing the fastest response. The default value is 60. If the boiler achieves its target very quickly with limited modulation, increase the "I" value to reduce the response time. If the boiler modulates very slowly to its target and has problems keeping up with the load, reduce the "I" value to increase the response time.

E. DOMESTIC HOT WATER (DHW)

1. **DHW Modes:**
   Table 8.2 provides an overview of the domestic hot water modes. The following are detailed descriptions of the operation of these modes:

   Mode 0 – No DHW: When this mode is selected, the control will not respond to either a thermistor signal or a contact closure at the DHW terminals (#5 & #6). There is also no output to DHW Pump Terminals.

   Mode 1 – DHW Store with Sensor: In this mode, the *PureFire*® control accepts a temperature input from an optional domestic tank sensor (54157). This sensor provides the DHW water temperature value to the control. The control targets the user selected DHW setpoint and modulates the boiler firing rate accordingly.

⚠ WARNING

Be sure to use only the tank sensor indicated. Other sensors will not provide accurate tank temperatures and may cause severe personal injury due to scalding.

⚠ DANGER

Water temperatures over 125°F can instantly cause severe burns or death from scalding. Children, elderly and disabled individuals are at the highest risk of scalding. See instruction manual for the indirect tank before setting the water heater temperature. Instruct users to feel the water temperature before bathing or showering. Anti-scald valves are recommended.

Mode 2 – DHW Store with Thermostat: This is the default mode for the control. In this mode, the *PureFire®* control is connected to the DHW tank temperature limit. When the limit closes, the control modulates the boiler firing rate to target a boiler supply setpoint. This setpoint is a user selected value with a factory default of 180 °F. The allowable range for this value is 134°F to 195°F.

⚠ NOTICE

The "Store Warm Hold" function will not be functional if the DHW tank mode is set to 2. This requires a DHW tank sensor.

2. **DHW Priority:**
The *PureFire®* boiler control provides limited domestic hot water priority with an installer selectable maximum time limit.

```
DHW SETTINGS                2 ▲

 CH/DHW Switch
 Time                   30min ▼
```

The CH/DHW Switch Time indicates the maximum amount of time that the boiler should operate to satisfy a CH demand or a DHW demand.

If there is a domestic hot water demand during a call for central heating, the control will immediately shut down the CH pump, start the DHW pump and target the DHW setpoint.

The control will continue to target the DHW setpoint until the time limit is reached or the demand is satisfied. Then, if there is still a CH demand, it will shut down the DHW pump, start the CH pump and target the required CH temperature.

If there is a central heating demand during a DHW call, the boiler will continue targeting the DHW setpoint with the DHW pump operating and the CH pump idle until the time limit is reached.

For example, if the CH/DHW Switch Time is set for 30 minutes, and a CH demand is activated after 6 minutes of a DHW call the following will occur. The boiler will continue to target the DHW setpoint and the DHW pump will continue to run for the remaining 24 minutes. After which time, the control will shut down the DHW pump, start the CH pump and target the required CH temperature.

3. **Store Warm Hold:**
When using a DHW tank sensor, the *PureFire®* boiler control can detect if the DHW heat demand is required only to overcome standby heat loss in the tank and is not a result of a hot water draw. In this instance, the burner will fire at low power (1% on the display) and continue until the tank setpoint is satisfied.

4. **Heat Dump Function:**
Brookhaven National Laboratories have performed studies that show diverting excess boiler heat to the DHW tank after a CH demand will greatly improve the system efficiency of the boiler installation. The Heat Dump Function is designed to take advantage of this.

Essentially the boiler will operate normally on a call for heat. Once the call for heat ends, the pumps will operate to dump heat to the indirect tank. Which pumps operate depends on the pump mode and DHW mode selected.

- Pump Mode 0 – DHW Mode 1 & 2: The DHW pump will operate to divert excess boiler heat to the indirect tank. The CH pump shuts down until this is accomplished.
- Pump Mode 1 – DHW Mode 1 & 2: The General pump will operate and the 3-way valve will direct excess boiler heat to the indirect tank.
- Pump Mode 2 – DHW Mode 1 & 2: The General pump will operate with the DHW pump to direct excess boiler heat to the DHW Tank. The CH pump is deactivated.

The pumps/3-way valves operate to dump heat to the DHW tank until the return temperature is less than the installer selected "Min Diff" temperature or until the "Max Time" limit is reached. This function can be disabled by choosing "Off" on the menu under "DHW Heat Dump."

5. **Maximum DHW Input Limit:**
The *PureFire®* control allows the installer to limit the maximum input of the boiler under a DHW load if desired. This can be used when the boiler is sized primarily for a CH load and is oversized for the DHW load. This can be set between 50% and 100% and the default is 100%.

6. **DHW Response Time:**
This feature allows the installer to adjust the response time of the boiler. The "I" value is adjustable from 15 to 100 with 15 providing the fastest response. The default value is 60. If the boiler achieves its setpoint very quickly without modulating, increase the "I" value to reduce the response time.

F. SERVICE NOTIFICATION

The *PureFire®* boiler control allows the installer to enable Service Notification through the installer menu. After enabling this feature, the installer selects the number of hours, the number of cycles, or the date when the "SERVICE" text appears on the display screen. This will prompt the user to call for service on the appliance.

The following chart shows the range and default values for the Service Notification feature.

If desired, the installer can set a specific date for the Service Notification.

Table 8.9: Service Notification Value Ranges

	Min.	Max.	Default
Notification	On	Off	Off
Hours	0	8,000	4,000
Cycles	0	50,000	10,000

To access the Notification menu operate the boiler under System Test, enter the installer menu by holding down the "Menu" and "Select" keys simultaneously for 10 seconds. Then press the "▼" key until the "➔" indicates "Service Notif." Press the "Select" key to choose the menu.

The first option is to reset the Notification Timer / Counter. Pressing the "Select" key will reset the timers and counters and "Done" will be shown in place of "Reset" on the lower right of the screen.

Pressing the "▼" key displays the "SERVICE Notification on" screen. The default setting for "Notification on:" is "Off" indicating that no notification will occur. The installer can choose from the number of hours (HRS), the number of cycles (CYCLES) or the Date at which the "SERVICE" indication will appear on the display screen.

The menus that follow allow the installer to choose the actual values for the Service Notification.

G. SYSTEM TEST

The System Test feature allows the installer or service person to make the control operate at Low Power, Ignition Power, or Maximum Power. This is a setup and troubleshooting tool that allows the installer or service person to obtain combustion readings or observe operation.

To operate the boiler under System Test, enter the installer menu by holding down the "Menu" and "Select" keys simultaneously for 10 seconds. Then press the "▼" key until the "➔" indicates System Test. Press the "Select" key to choose the menu. The default setting for System Test is "Off". Choose the desired setting and press "Select" again to initiate the test.

Once the System Test is initiated, the service person may exit the menu screen by pressing the "Menu" key until the status screen is displayed. "System Test" will be displayed at the top of the display screen until the operator exits the system test mode.

⚠ NOTICE

Be sure to set the System Test parameter back to "Off" before leaving the installation. Otherwise, problems with cycling or insufficient heat may occur.

H. STATUS & FAULT HISTORY

1. **General:**
   The *PureFire*® boiler control allows the installer to view the status of several key parameters. In addition, it provides details in English about the last 15 Blocking Errors and the last 15 Lockout Faults.

   The Status and Fault History can be viewed from the Installer Menu. The Installer Menu Structure is shown in Appendix C of this manual.

   This menu can be accessed by pressing and holding the "Menu" and "Select" keys simultaneously for 10 seconds. The "➔" indicator will be indicating "Status". Press the "Select" Key to access this feature.

2. **Status:**
   Current Supply Setpoint: The first screen indicates the current supply setpoint. In CH Mode 0, 3, and 6 this will be the setpoint selected from the User Menu. If the boiler is operating an outdoor reset mode (CH Mode 1 or 2) this value will be the target setpoint temperature calculated based on the outdoor temperature. In CH Mode 4, this value will correspond to the 0-10 V signal input.

   Fan Speeds: By pressing the "▼" key the operator can view the current fan speed and the low power fan speed. The current fan speed will be directly comparable to the current input rate. The low power fan speed is a factory preset software parameter that indicates the minimum input to the boiler.

   Pressing the "▼" key again displays the ignition and high power fan speed. Both of these are factory preset software parameters that cannot be changed by the installer. The ignition speed is the speed at which the blower runs during the ignition period. The high power fan speed corresponds to the maximum input to the boiler.

   Flame Signal/Failures: Pressing the "▼" key again will display the Flame Signal/Failures Screen. The flame signal is an indication of combustion stability of the burner. If this value is below 1.7 μA (microampere) the control will close the gas valve and the burner will recycle through the ignition cycle. The flame signal should be above 5.0 μA in normal operation.

   If the control loses its flame signal 3 times during one call for heat, it will lock out the control indicating, "Flame Failure". The number of flame failures in the history of the control is displayed below the flame signal on the menu screen.

   The *PureFire*® boiler control uses dual flame sensing to minimize nuisance lockouts. See Section 10, Troubleshooting, to address flame failure issues.

   Ignition Attempts: Once again, press the "▼" key to advance to the Ignition attempts status screen. This screen displays the number of successful and failed ignition attempts that have been made by the control. If excessive ignition attempts are shown on this screen, reference Section 10, Troubleshooting.

   Boiler Run Time: Pressing the "▼" key again advances the menu to show Boiler Run Time. This indicates the number of hours that the boiler has operated under CH or DHW demand. The values are rounded to the nearest hour.

3. **Fault History:**
   The following sections provide instructions on how to access the fault history that is stored on the control. The *PureFire*® control stores the last 15 blocking errors and the last 15 lockout errors and allows the installer or service person to review the fault history of the control.

   Section 10, Troubleshooting, provides detailed descriptions and troubleshooting approaches to the errors reported by the control.

   Last Block: By continuing to press the "▼" key, the status menu displays the following screen. The last block indicates the last blocking error (error that does not cause a lockout). The first number indicates the time interval in minutes since the previous error. The #EXX represents the Error Code which can be referenced in Section 10, Troubleshooting. The last two lines provide an English description of the error.

```
STATUS                    9▲
 3min to prev. Block
BLOCKED CONDENSATE
DRAIN                      ▼
```

Last Lock: The next screen accessed by pressing the "▼" key provides information about the last lockout error. Again the first number represents the interval since the last lockout error. #AXX represents the Fault Code which can be referenced in Section 10, Troubleshooting. Again the last two lines provide an English description of the fault.

```
STATUS                10▲
16hrs to prev. Lock

 Ignit error
```

I. SENSOR RESISTANCE

See Figure 8.7 for typical resistance of the boiler sensors.

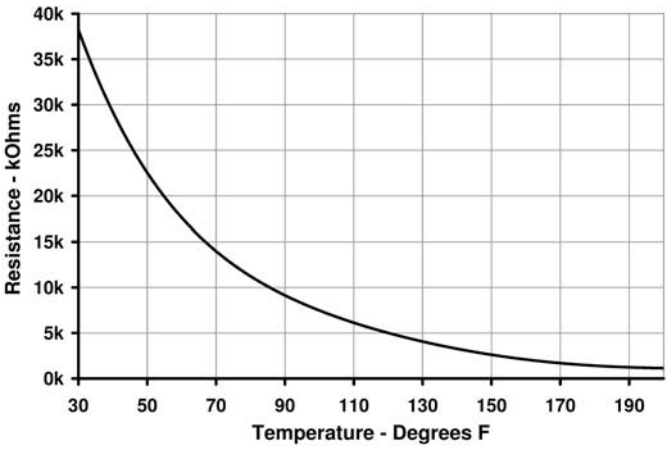

Figure 8.7: Sensor Resistance

J. MULTIPLE BOILERS

1. To cascade PF-50 and PF-80 models, check that the display sub base has the cascade link as illustrated in Figure 8.10 Cascade Link connection & Switch Setting.

2. *PureFire*® boiler controls can operate together to control up to 16 boilers for one central heat or domestic hot water demand. Only the addition of a system sensor (54156) is required to provide this operation.

3. **Overview:**
   a. Master Boiler: In a multiple boiler system, a boiler designated as the "Master" boiler controls the function of the boiler system.
      - Attached to a system sensor which monitors the system water temperature.
      - Can also be connected to an outdoor sensor (54112), included with each boiler, as well as an optional DHW sensor (54157) or a standard DHW thermostat.
      - Determines which boiler operates first (lead) and when to bring on additional boilers.
      - Determines the input rate to operate individual boilers.
      - Shuts down all boilers in the system if the LWCO contacts are opened.

   b. Dependent Boilers: The "dependent" boilers operate at the input rate and/or temperature that the Master boiler specifies.
      - Maintain all of their own safety parameters such as safety limit, vent temperature limit, and freeze protection.
      - Control their own general circulator that is energized whenever there is a call for either Central Heat or Domestic Hot Water.
      - Shuts down the individual boiler if the dependent boiler LWCO contacts are opened.

4. **System Piping & Wiring:**
   a. Multiple boilers with multiple zones with zone valves.
      - Figure 8.8 shows a typical system which uses a CH circulator, a DHW circulator and zone valves to distribute the heating load to the building.
      - A three zone valve control panel (not included) controls circulation to individual zones.

⚠ NOTICE

The central heating (CH) circulator and the domestic hot water (DHW) circulator must be sized in accordance with good Engineering practices based on the required flow and pressure drop of the system. Failure to do so may result in system performance problems.

      - A call from any of the heating zones initiates a contact closure from the zone relay across the CH thermostat connections (terminals #1 &2) on the master boiler. This initiates ignition of the "lead" boiler and its general pump. In addition, the CH circulator is energized.
      - A call for domestic hot water can either be initiated internally by the control when it sees a drop in indirect tank temperature or by a tank thermostat. In either case, the lead boiler is ignited and its general pump operates. The DHW circulator is also energized.

   b. Multiple boilers with multiple zones with zone circulators.
      - Figure 8.9 shows a typical system which uses a circulator zone control panel to control the central heating zones.
      - The DHW circulator can be operated by the priority zone or can be connected directly to the boiler (as shown). In either case, the priority zone cannot be used for heating.
      - Again, a call for heat from any of the heating zones causes the master boiler to initiate operation of the lead boiler and its general circulator. The CH circulators are controlled by the zone control relay panel.
      - A DHW call results in operation of the lead boiler and its general pump. The DHW pump is also energized. On the PF-210 & PF-399 a built-in relay provides a signal to the zone controller that the priority zone is operating. This prevents any of the CH zone circulators from operating.
      - Wiring for a typical circulator zone relay is shown in Figure 7.4.

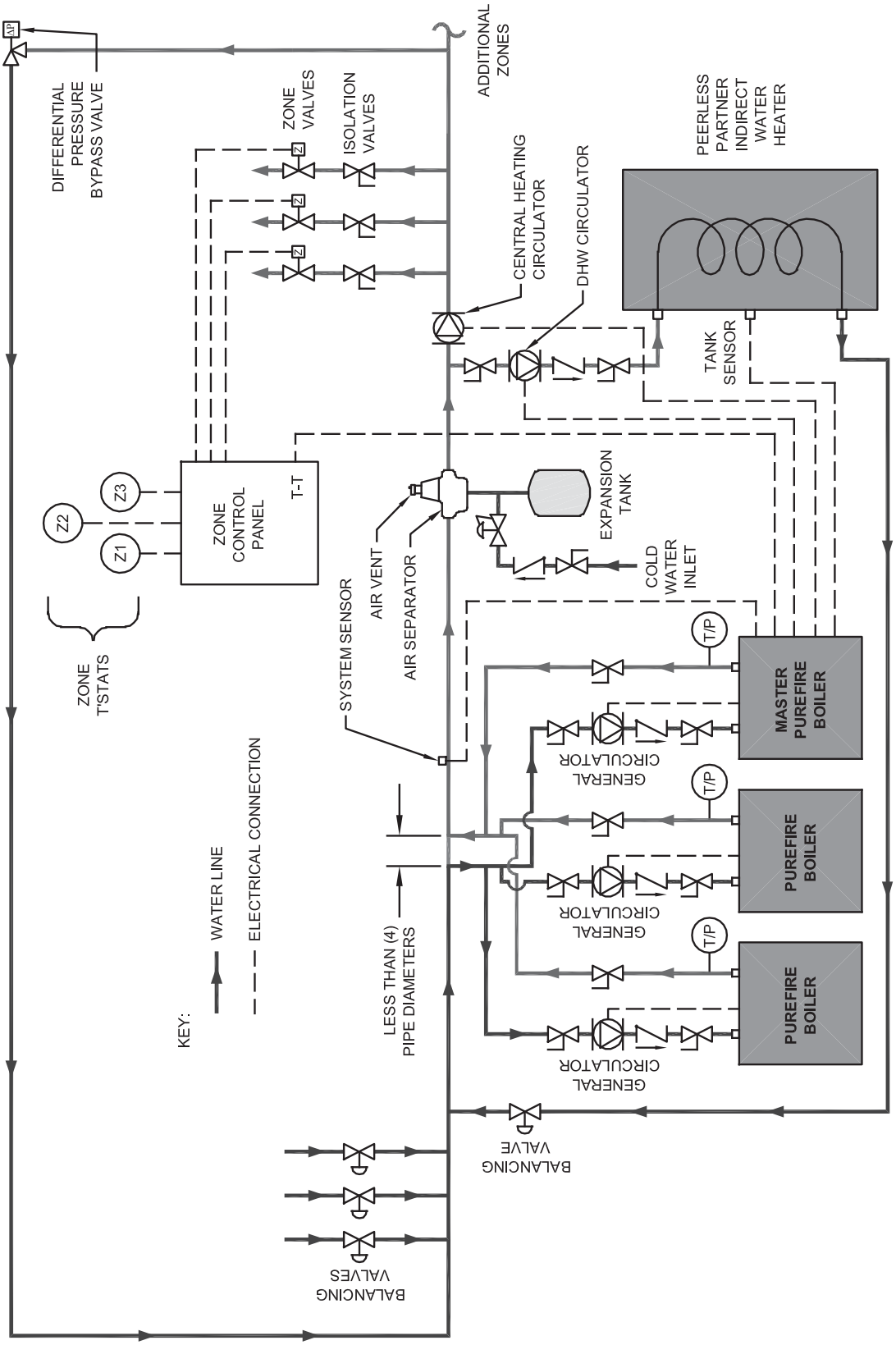

Figure 8.8: Multiple Boiler (Cascade) Piping / Electrical Connections for Systems with Zone Valves

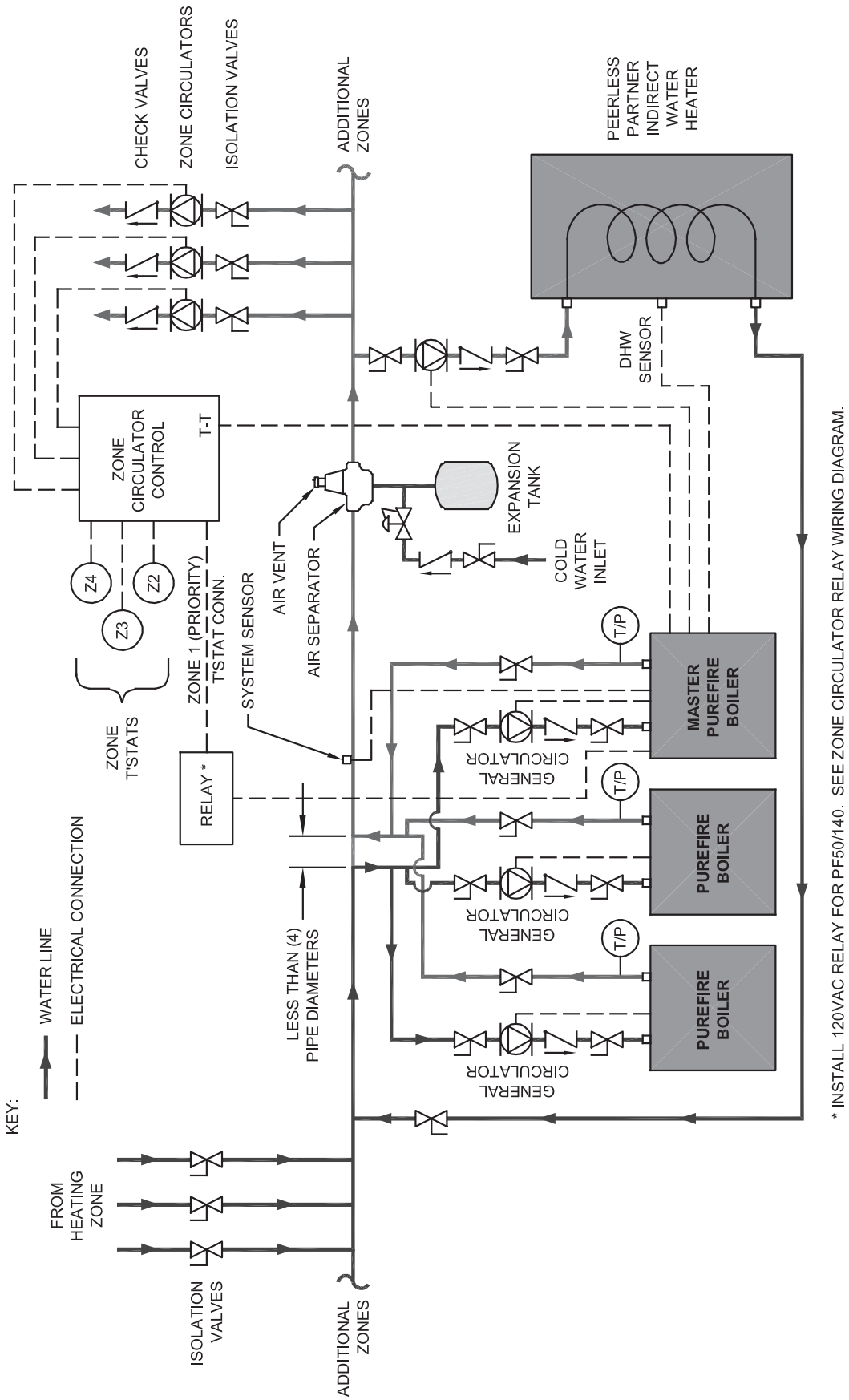

Figure 8.9: Multiple Boiler (Cascade) Piping / Electrical Connections for Systems with Zone Circulators

5. **Setting up Multiple Boiler Operation:**
   a. Setting the Boiler Address:
      - Press the "Menu" and "Select" keys simultaneously for 5 seconds to enter the Installer Menu.
      - Use the "▼" key to scroll down to "Cascade Settings" on the menu.
      - Pressing "Select" will cause the Boiler Address value to blink. Use the "▼" or "▲" key to change the value.
      - The master boiler will be designated as Boiler Address: 1.
      - All dependent boilers must have sequential boiler address settings as shown on the following table.

Table 8.10: Cascade Addresses and Sensor Functions

Boiler Operation	Cascade Address	System Sensor	Outdoor Sensor	DHW Sensor
Stand-alone Boiler	0	Not Active	Active	Active
Boiler #1 Master	1	Active	Active	Active
Boiler #2 Dependent	2	Not Active	Not Active	Not Active
Boiler #3 Dependent	3	Not Active	Not Active	Not Active
↓	↓	↓	↓	↓
Boiler #16 Dependent	16	Not Active	Not Active	Not Active

      - Once a boiler is designated as a dependent boiler, the display will show the individual boiler supply temperature and its status.
      - The master boiler will display the system temperature and the overall status of the cascade system.
      - By pressing the "▼" or "▲" key the operator can view the master boiler status.

   b. Connecting the Cascade Links – PF-50 through PF-140.
      - Remove the User Interface Display from the boiler by pressing the tab on bottom edge and rotating it outward and upward as shown in Figure 8.10.
      - There will be two sets of terminals on the sub-base still attached to the boiler. The first set will have wires attaching the display to the Main Control board.
      - Attach 2 wires to the second set of terminals on each boiler to be connected.
      - **For the Master Boiler only, slide the switch lever toward the center of the panel to the "ON" position.**
      - For all dependent boilers, the switch should remain in the "OFF" position toward the side of the printed circuit board.
      - Re-assemble the User Interface Display and connect wires to each boiler in the system.
      - All of these wires are to be connected to the Master Boiler as shown in Figure 8.11.

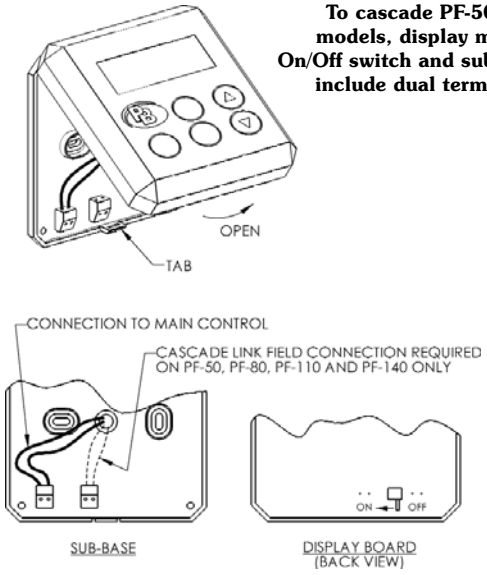

To cascade PF-50 and PF-80 models, display must include On/Off switch and sub-base must include dual terminal blocks.

Figure 8.10: Cascade Link Connection & Switch Setting

   c. Connecting the Cascade Links – PF-210 & PF-399.
      - Remove the User Interface Display from the Master boiler only.
      - Slide the Master Switch Lever toward the center of the printed circuit board. The Master Switch Lever is not marked with "ON" or "OFF" but the switch is in the "ON" position when it is moved to the left as viewed from the back of the display. This position is shown in Figure 8.10.
      - Re-attach the User Interface Display.
      - Connect wires from terminals #11 & #12 between all boilers in the system.

6. **Cascade Operation:**
   a. When a call for Central Heat (CH) or Domestic Hot Water (DHW) is present, the Master boiler chooses which boiler will lead based on the Cascade Rotation Interval.
   b. Before starting the Lead boiler, the Master control will first check to be sure that the System temperature is lower than the System Setpoint + Stop Boiler Differential.
   c. After a Trial For Ignition (TFI), the lead boiler will modulate its input rate to meet the heat demand.
   d. Any time that a boiler is started the Cascade Start Delay Time will be initiated and no boiler will be allowed to start before this time elapses. This is to allow time for the system to stabilize before bringing on an additional boiler.
   e. After the delay time has elapsed, one of the following conditions must be met before starting the next boiler:
      - The System Temperature must be lower than the Set Point minus the Cascade Start Boiler Differential temperature, or
      - The input rate of all boilers operating must be higher than the Next Boiler Start Rate.

To cascade PF-50 and PF-80 models, check that the display sub-base has the cascade link as illustrated in Figure 8.10.

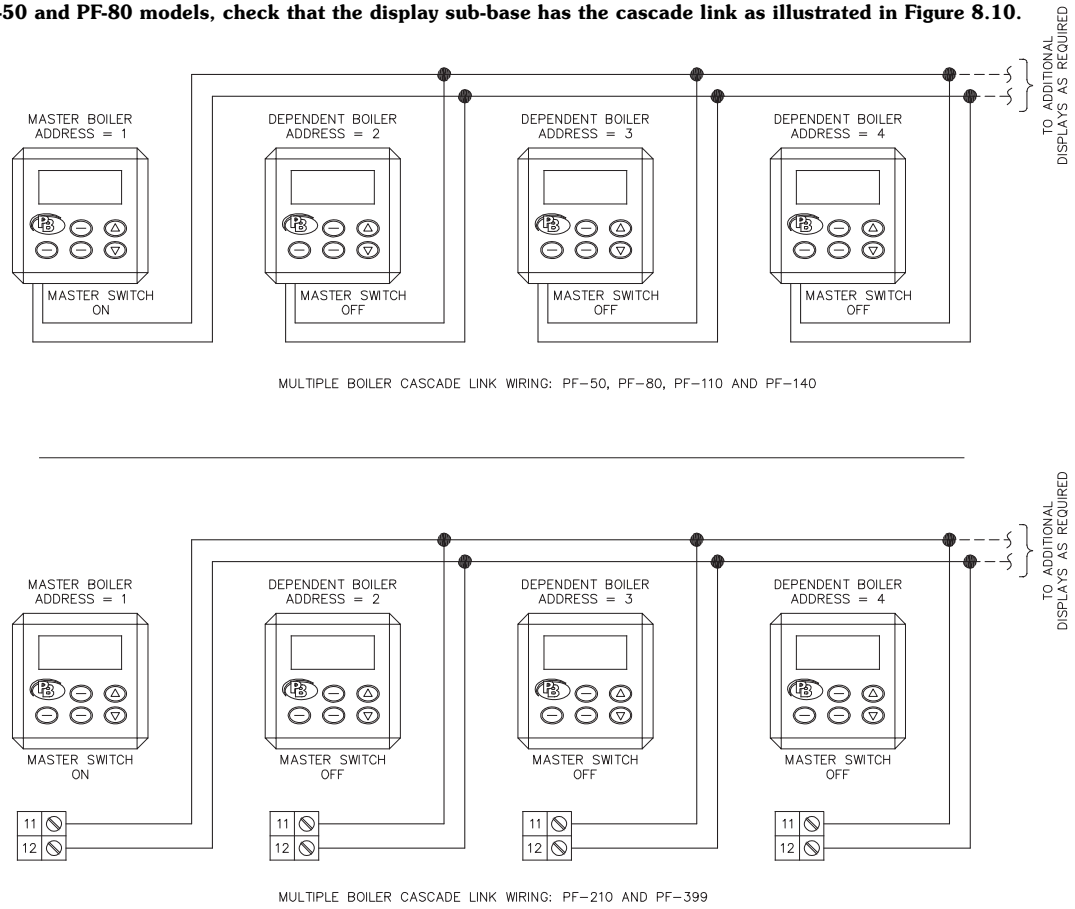

Figure 8.11: Interconnection of Cascade Link Wires

f. After operation of the second boiler is initiated, the Cascade Start Delay Time must elapse before bringing on additional boilers. Again, in order to initiate operation of additional boilers one of the same conditions must be met.

g. When the boiler system approaches its Setpoint, the boilers will reduce input rates at approximately equal values. When the input rates of all of the operating boilers fall below the Next Boiler Stop Rate, the master control will shut down the last boiler that started after the Cascade Stop Delay Time has elapsed.

h. The Calculated Setpoint Max Offset Up and Calculated Setpoint Max Offset Down are applied to individual boilers in multiple boiler cascade operation.

- These temperature offset values are used to change the response of individual boilers to the system setpoint.
- Increasing these values will cause the system to react more quickly, but may result in frequent cycling.
- Decreasing these values will cause the system to react more slowly to achieve the setpoint.
- By increasing the Calculated Setpoint Max Offset Up value, the Master boiler will offset individual boiler setpoints temperature by a larger amount in order to achieve the system setpoint.
- By increasing the Calculated Setpoint Max Offset Down value, the boilers will decrease the boiler setpoints by a larger amount to achieve the system setpoint.

i. The Rotation Interval is the frequency at which the Master Boiler will change the Lead boiler in the sequence.

- For example, if the Rotation Interval is set to 4 days and there are 4 boilers operating together, the following chart shows the operating sequence over the next 25 days.

Table 8.11: Rotation Interval Sequence

Days of Operation	Start/Stop Sequence
1-5	1-2-3-4
6-10	2-3-4-1
11-15	3-4-1-2
16-20	4-1-2-3
21-25	1-2-3-4

7. **Multiple Boilers – Boost & Warm Weather Shutdown (WWSD):**

a. To use the Boost function with multiple boilers, the parameters on the master boiler are used. Boost parameters set on dependent boilers have no effect on the system operation.

b. Similarly, the WWSD Temperature set on the master boiler will prevent any boilers from operating for a CH demand when the outdoor temperature is above this value.

8. **Multiple Boilers – Ramp Delay:**
   a. The ramp delay feature can be set on each individual boiler.
   b. However, it is important to note that since the dependent boilers treat DHW demands as a CH call, the ramp delay will take effect even when the DHW tank calls.

9. **Multiple Boilers – Anti-Cycling:**
   a. The Anti-Cycling feature is active on all boilers unless it is disabled.
   b. This will prevent dependent boilers from operating within the prescribed time limit. However, it will only prevent the boiler from cycling on its own limit. Repetitive calls from the master boiler will result in cycling.

10. **Multiple Boilers – DHW Operation:**
    a. Since the DHW tank sensor or thermostat is connected only to the Master boiler, this is the only boiler that will receive the DHW demand.
    b. The master control will start boilers as necessary to meet the demand.
    c. Boilers with a boiler address of 2 or higher will automatically be switched to DHW Mode 0 (No DHW).

K. DEFAULTS

1. **Factory Defaults – Restore:** By pressing the "Select" key while in the "Factory Defaults" screen. All factory settings will be restored on the control.

2. **Site Defaults – Save:** To save the current settings as "Site Defaults," press the "Select" key while in the following menu.

3. **Site Defaults – Reset:** To restore the "Site Defaults," press the "Select" key while in the following menu.

9. START-UP PROCEDURE

A. GENERAL

1. Confirm that all water, gas and electricity are turned off.
2. Verify that the water piping, venting & air intake piping, gas piping, electrical wiring and electrical components are installed in accordance with the manufacturer's instructions. Be sure that the boiler is installed in accordance with this manual and good engineering practice.
3. Turn on electricity and gas to the boiler

B. CHECK WATER PIPING

1. Fill the boiler and system with water, making certain to purge all air from the system. Open each vent in the system until all air is released and water begins to be discharged. Then close the vent.
2. The pressure reducing valve on the fill line will typically allow the system to be pressurized to 12 PSI. Consult manufacturers instructions for operation of the valve and expansion tank.
3. Check joints and fittings throughout the system and repair as required.

C. CHECK GAS PIPING

1. Turn on gas to the boiler using the shut-off valve upstream of the sediment trap. Be sure that the gas shut-off valve supplied with the boiler is in the closed position.
2. Connect a manometer to the gas supply upstream of the supplied manual gas valve.
3. Confirm that the gas supply pressure to the boiler is between the minimum and maximum values as indicated in Section 5.
4. If a supply pressure check is required, isolate the boiler and gas valve before performing the pressure test. If the supply pressure is too high or too low, contact the fuel gas supplier.
5. Double check the fuel gas supply pressure after the boiler is running to be sure that the pressure doesn't drop off significantly under operation.

D. CHECK OPERATION

1. Either disconnect or set CH thermostat and DHW tank thermostat to assure that no call for heat.
2. Turn on electricity and all manual gas valves to the boiler. Check to see if the LCD display is lit. The control will display, "Standby".
3. Refer to Section 8, Boiler Control, to set up the control for the desired operation.
4. Use the ignition sequence, Figure 8.1 to follow the light off and shutdown sequences and to assist in troubleshooting operation problems. If the boiler does not function properly, consult Section 10, Troubleshooting.
5. After starting the boiler, be certain that all controls are working properly and that the combustion is properly set up. Paragraphs 6 and 7 below provide instructions on how to do this.
6. Check that the boiler will shut down when the supply water temperature reaches the control setpoint.
   a. Note the boiler setpoint by accessing the User Menu, Status Display. Press the "Menu" key on the keypad. Choose Status by pressing the "Select Key". Use the "▼" and "▲" key to scroll through the CH and DHW setpoints. Refer to Appendix B for the User Menu.
   b. Use the System Test Mode in the Installer Menu to choose High Input Power.
   c. Monitor the boiler temperature on the temperature gauge (supplied for field mounting) and on the Status display.
   d. The boiler should shut down at the boiler setpoint plus 10°F (5.6°C). If it does not shut down turn off the boiler and contact your PB Heat representative.
7. Check combustion readings in the boiler vent pipe.
   a. Drill and tap a 1/8" NPT threaded hole in the boiler vent pipe within 12" (305 mm) of the boiler vent connection. (21/64" Drill and 1/8" NPT Pipe Tap recommended) This is to be used as the combustion test port for the combustion analyzer. See Figure 9.1.

Figure 9.1: Drill and Tap Combustion Test Port

   b. Using a combustion analyzer with the capability to read carbon dioxide (CO_2) and carbon monoxide (CO), place the probe into the combustion test port. See Figure 9.2.
   c. Manually set the boiler to Maximum power by entering the System Test Mode. See Appendix C, Installer Menu.

Figure 9.2: Insert Analyzer Test Probe into Test Port

- Verify that the fan speed indicated is within 30 rpm of the maximum power fan speed in Table 12.2.

- Verify that the CO and CO_2 emissions are within the parameters specified in Table 5.4.

d. Manually set the boiler to Low Power by entering the System Test Mode. See Appendix C, Installer Menu.

- Verify that the fan speed indicated is within 100 rpm of the Low Power fan speed listed in Table 12.2.

- Verify that the CO and CO_2 emissions are within the parameters specified in Table 5.4.

e. If the values in either of these instances falls outside the parameters listed in Table 5.4, turn off the boiler and contact your PB Heat representative. For best results, the value should be set for the middle of the range (9% for Natural Gas and 10% for LP Gas).

f. Be sure to set the System Test mode to Off so that the boiler will modulate correctly in accordance with the load.

g. After removing the analysis probe from the vent pipe, insert a PVC or Stainless Steel pipe plug into the test port. See Figure 9.3.

h. Record the combustion readings on the "Start-up Combustion Record" in Appendix D. It is very important to record all of the information requested on the sheet for follow up and troubleshooting.

Figure 9.3: Insert Pipe Plug into Test Port

E. LIGHTING & OPERATING PROCEDURES

FOR YOUR SAFETY READ BEFORE OPERATING

WARNING: If you do not follow these instructions exactly, a fire or explosion may result causing property damage, personal injury, or loss of life.

A. This appliance does not have a pilot. It is equipped with an ignition device which automatically lights the burner. Do not try to light the burner by hand.

B. BEFORE OPERATING smell all around the appliance area for gas. Be sure to smell next to the floor because some gas is heavier than air and will settle on the floor.

WHAT TO DO IF YOU DO SMELL GAS

- Do not try to light any appliance.
- Do not touch any electric switch; do not use any phone in your building.
- Immediately call your gas supplier from a neighbor's phone. Follow the gas supplier's instructions.
- If you cannot reach your gas supplier, call the fire department.

C. Use only your hand to turn the gas control valve. Never use tools. If the handle will not turn by hand, don't try to repair it, call a qualified service technician. Force or attempted repair may result in a fire or explosion.

D. Do not use this appliance if any part has been under water. Immediately call a qualified service technician to inspect the appliance and to replace any part of the control system and any gas control which has been under water.

OPERATING INSTRUCTIONS

1. STOP! Read the safety information above.
2. Set the thermostat to lowest setting.
3. Turn off all electric power to the appliance.
4. This appliance is equipped with an ignition device which automatically lights the burner. Do not try to light the burner by hand.

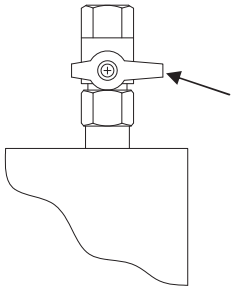

5. Turn gas shutoff valve clockwise ↻ to "OFF". Handle will be perpendicular to pipe, do not force.
6. Wait five (5) minutes to clear out any gas. Then smell for gas, including near the floor. If you smell gas, STOP! Follow "B" in the safety information above on this label. If you don't smell gas, go to the next step.
7. Turn gas shutoff valve counterclockwise ↺ to "ON". Handle will be in line with the pipe.
8. Turn on all electric power to appliance.
9. Set thermostat to desired setting.
10. If the appliance will not operate, follow the instructions "To Turn Off Gas To Appliance" and call your service technician or gas supplier.

TO TURN OFF GAS TO APPLIANCE

1. Set the thermostat to lowest setting.
2. Turn off all electric power to the appliance if service is to be performed.
3. Turn the gas shutoff valve clockwise ↻ "OFF". Handle will be perpendicular to pipe, do not force.

(PF) 9474 REV 0

Figure 9.1: Lighting & Operating Instructions

10. TROUBLESHOOTING

A. BLOCKING ERRORS

1. When a Blocking Error occurs the controller will display a message and an "E" error code on the display module.
2. These error messages and several suggested corrective actions are included in Table 10.1.
3. Certain Blocking Errors will, if uncorrected, become Locking Errors as described is Paragraph B.

B. LOCKING ERRORS

1. When a Locking Error occurs the controller will display a message and an "A" error code on the display module.
2. These error messages and several suggested corrective actions are included in Table 10.2.
3. Press the reset key to clear the Locking Error and resume operation. Be sure to observe the operation of the unit to prevent a recurrence of the fault.
4. The *PureFire*® control will retry for ignition after one hour of being in a lockout condition. This will prevent lockout errors from resulting in "No Heat" calls if there is an intermittent problem.
5. The *PureFire*® control logs the flame signal four times during the last 2 seconds of the ignition period. This is to aid in troubleshooting ignition errors. A flame signal below 2 micro-amps at the end of this period will result in a lockout. If the flame signal is low, remove the flame sensor and igniter for inspection. Also, be sure that the lead to the flame sensor is not grounded.

C. ERROR MESSAGES IN A CASCADE SYSTEM

See paragraph D and the Cascade section of Appendix A for further information on how errors are displayed when using a Cascade System.

⚠ WARNING

When servicing or replacing any components of this boiler be certain that:
- **The gas is off.**
- **All electrical power is disconnected.**

⚠ DANGER

When servicing or replacing components that are in direct contact with the boiler water, be certain that:
- **There is no pressure in the boiler. (Pull the release on the relief valve. Do not depend on the pressure gauge reading).**
- **The boiler water is not hot.**
- **The electrical power is off.**

⚠ WARNING

Do not use this appliance if any part has been under water. Improper or dangerous operation may result. Contact a qualified service technician immediately to inspect the boiler and to repair or replace any part of the boiler which has been under water.

⚠ CAUTION

If overheating occurs or the gas supply fails to shut off, do not turn off electrical power to the circulating pump. This may aggravate the problem and increase the likelihood of boiler damage. Instead, shut off the gas supply to the boiler at the gas service valve.

⚠ CAUTION

Label all wires prior to disconnection when servicing controls. Wiring errors may cause improper and dangerous operation. Verify proper operation after servicing.

⚠ CAUTION

The convenience outlet is powered even when the service switch is off.

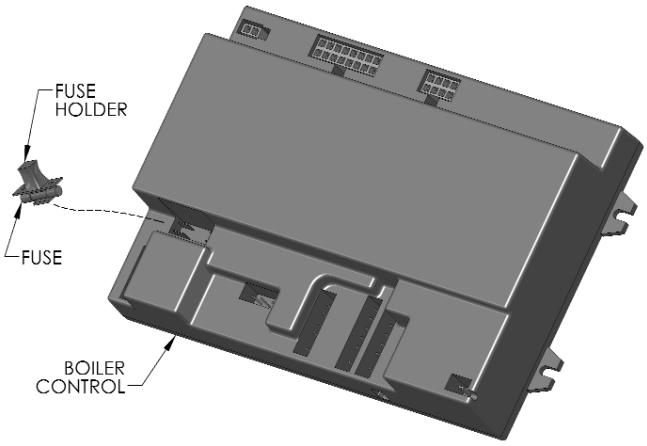

NOTE: BOILER CONTROL HAS A REPLACEABLE FUSE. BE SURE TO CHECK FUSE IF INSPECTION FINDS A LINE VOLTAGE POWER ISSUE.

Figure 10.1

Table 10.1: Control Board Blocking Error Codes (automatic reset):

"E" CODE	Error Display	Internal No.	Error Description	Corrective Action
E01	SUPPLY SENSOR NOT CONNECTED	51	Supply sensor not connected.	Check harness and sensor.
E02	RETURN SENSOR NOT CONNECTED	52	Return sensor not connected.	Check harness and sensor.
E04	DHW SENSOR NOT CONNECTED	55	DHW sensor not connected.	If DHW Mode is not intended to be set to Mode 1, DHW Store with Sensor, then change it to the appropriate Mode. Check harness and sensor.
E05	STACK SENSOR OPEN	57	Flue gas sensor open.	Check vent temperature, harness, sensor.
E11	SUPPLY SENSOR SHORT	59	Supply sensor shorted.	Check harness and sensor.
E12	RETURN SENSOR SHORT	60	Return sensor shorted.	Check harness and sensor.
E13	STACK SENSOR SHORT	65	Flue gas sensor shorted.	Check harness and sensor.
E14	DHW SENSOR SHORT	63	DHW sensor shorted.	Check harness and sensor.
E19	COMMUNICATION ERROR E2PROM ERROR	0	Problems reading from or writing to e2prom.	Contact PB Heat Representative.
E20	FALSE FLAME DETECTED	35	False Flame detected.	Verify no flame in observation port. Check Sensor.
E21	HOT/NEUTRAL REVERSED	44	Phase and neutral of mains supply are reversed.	Verify polarity of incoming wiring. Check boiler ground and harness.
E22	POOR GROUND	43	No earth connected or internal hardware error.	Check boiler ground and harness.
E23	NET FREQUENCY ERROR	45	Mains frequency differs more than 2% from 60Hz.	Contact electrical provider and/or an electrician.
E24	POOR GROUND	46	Earth connection is not ok.	Check boiler ground and harness.
E25	BLOCKED VENT	38	Blocked Vent Switch is Open	This error applies to PF-210 and PF-399 models. Check for blocked vent pipe or blocked heat exchanger. Check switch and tubing to switch.
E26	BLOCKED CONDENSATE DRAIN	41	Condensate drain blocked.	Check condensate tanks, hoses, condensate switch, and harness.
E30	HIGH STACK TEMPERATURE	39	Flue gas sensor above max flue setpoint + diff.	If flue pipe is hot, check flue temperature and compare to values shown Table 8.6. Check for proper gas input and combustion readings, check for dirty heat exchanger. If flue pipe is not hot, check flue sensor and harness.
E31	LOW WATER	36	Water level is too low.	Check boiler water level, low water cut-off, harness. If a LWCO is not used, a jumper should be placed between terminals #9 and #10, LWCO Contact.
E32	HIGH RETURN TEMP	40	Return temperature is above 194°F (90°C).	Check for reversed supply and return piping or pump installed backwards.
E42	INTERNAL HDWRE ERROR	47	Internal hardware error.	See Note*
E45	INTERNAL HDWRE ERROR	31	Internal hardware error.	See Note*
E46	INTERNAL HDWRE ERROR	32	Internal hardware error.	See Note*
E47	INTERNAL HDWRE ERROR	33	Internal hardware error.	See Note*
E48	INTERNAL HDWRE ERROR	34	Internal hardware error.	See Note*
E51	RESET BUTTON ERROR PLEASE WAIT.	66	Reset button pressed more than 7 times within one minute.	Wait five minutes. If error does not clear, replace control.

* If persistent blocking errors, E42 through E48, occur, systematically disconnect all wires that were not supplied by the factory with the exception of the power supply (CH T'stat, DHW T'stat, LWCO and Pumps). If the error code goes away, determine if there may be feedback from one of the circuits. If the Error occurs with all of these disconnected, there is likely a problem with the control board.

Table 10.2: Control Board Locking Error Codes (manual reset):

"A" CODE	Error Display	Internal No.	Error Description	Corrective Action
A01	IGNITION ERROR	1	Three consecutive unsuccessful ignition attempts.	1. Watch the igniter through the observation window. 2. If no spark is present, check the spark electrode for the proper 3/16" gap. 3. Remove any corrosion from the spark electrode with abrasive. 4. If spark is present but no flame, check the gas supply to the boiler. Check for high or low pressure. 5. If there is a flame, check the flame signal ignition log in the Installer Menu. If values for flame signal are less than 3.1 μA, check wiring connections and clean the harness connector at the control. 6. Determine if gas valve is opening by monitoring gas pressure. 7. Check gas presure.
A02	FLAME FAILURE	24	Three consecutive flame failures during one demand.	1. If boiler sparks, lights briefly and then goes out: a. Disconnect the flame sensor cable and then retry ignition.* b. If the flame stays lit, allow the boiler to run for several minutes and then reattach the cable.* c. If the problem persists, remove the flame sensor and inspect the burner through the sensor opening. If metal fibers are protruding from the burner, use a blunt probe to move the fibers away from the sensor. d. If the problem is still present, replace the flame sensor. 2. If the unit locks out on flame failure during normal operation: a. Check gas pressure at the inlet to the gas valve (See figure 5.2) while the boiler is operating. b. Check the flame signal in the Installer Menu under Status. This will also show the total number of flame failures. If the flame signal reads less than 2.8 μA, clean the sensor and igniter. Be sure that the wiring harness is fully seated at the control. c. If the flame signal is consistently low, check the signal with the sensor disconnected. If the flame signal improves, replace the flame sensor.
A03	OVERHEAT LIMIT OPEN	18	High Temperature Limit Open (Set Temperature: 195°F)	1. Check CH, DHW, General Pump Operation 2. Assure that there is adequate flow through the boiler by checking the status menu and assuring less than 40°F temperature rise across the boiler. 3. Check thermistor reading on the supply thermistor. Replace it if necessary.
A04	INTERNAL ERROR GAS VALVE RELAY	5	Gas Valve Relay Problems.	See Note**
A05	INTERNAL ERROR SAFETY RELAY	6	Safety Relay Problems.	See Note**
A09	INTERNAL SOFTWARE ERR RAM ERROR	9	Internal Software Error.	See Note**
A10	COMMUNICATION ERROR E2PROM ERROR	12	No Communication with E2prom.	See Note**

** If persistent locking errors, A04 through A18, occur, systematically disconnect all wires that were not supplied by the factory with the exception of the power supply (CH T?stat, DHW T?stat, LWCO and Pumps). If the error code goes away, determine if there may be feedback from one of the circuits. If the Error occurs with all of these disconnected, there is likely a problem with the control board.

Table 10.2 (cont'd): Control Board Locking Error Codes (manual reset):

"A" CODE	Error Display	Internal No.	Error Description	Corrective Action
A12	SOFTWARE OUT OF DATE E2PROM OUT OF DATE	10	Contents of e2prom is not up-to-date.	See Note**
A13	INTERNAL ERROR	13	Internal Software Error	See Note**
A14	INTERNAL ERROR	14	Internal Software Error	See Note**
A15	INTERNAL ERROR	16	Internal Software Error	See Note**
A16	INTERNAL ERROR	22	Internal Software Error	See Note**
A18	INTERNAL ERROR	19	Internal Software Error	See Note**
A19	FALSE FLAME DETECTED AFTER SHUTDOWN	20	Flame signal detected 10 sec. after closing the gas valve.	1. Check flame sensor to be sure there is no short to ground. 2. Check igniter to be sure there is not short to ground. 3. This could also indicate that the gas valve doesn't close completely.
A20	FALSE FLAME DETECTED BEFORE IGNITION	21	Flame signal detected before gas valve opened.	4. Check flame sensor to be sure there is no short to ground. Check igniter to be sure there is not short to ground.
A23	FLOW_SW_NOT_OPEN	25	CH flow switch not working.	1. Check for electrical continuity between wires connected to terminals 9 & 10 from field supplied flow switch. 2. If there is continuity when the circulator is off, there is a system piping or circulator control problem.
A24	FLOW_SW_NOT_CLOSED	26	CH flow switch not working.	1. Check for electrical continuity between wires connected to terminals 9 & 10 from the field supplied flow switch. 2. If there is no continuity, check to be sure the circulator is working. 3. If the circulator is working correctly, check the flow switch.
A32	FAN NOT RUNNING	23	Internal Software Error.	
A33	FAN SPEED ERROR	8	Fan speed detected is more than 300 rpm different from targeted value for more than 60 seconds.	1. Is the fan running at full speed? • Check 4 wire control connection to blower and control. • Replace harness. 2. Is the fan running at a modulated speed? • Check 4 wire control connection to blower and control. • Replace harness. 3. Is the fan not running? • Check the 3 wire power connection to the blower and control. • Replace harness. • Replace Blower.
A50	RETURN HIGHER THAN SUPPLY	11	Boiler return water temperature higher than supply for more than 5 ignition attempts.	1. Check system piping. Assure that the water is entering the return connection and exiting the supply connection. 2. Compare the supply thermistor reading to the temperature gauge, if they don't agree, replace the supply thermistor.

** If persistent locking errors, A04 through A18, occur, systematically disconnect all wires that were not supplied by the factory with the exception of the power supply (CH T'stat, DHW T'stat, LWCO and Pumps). If the error code goes away, determine if there may be feedback from one of the circuits. If the Error occurs with all of these disconnected, there is likely a problem with the control board.

D. WARNING ERRORS

The *PureFire*® boiler control will display a blinking screen under several conditions. Several of these conditions provide the error information directly on the screen. Table 10.3 shows sensor errors and corresponding corrective actions.

1. **Outdoor Sensor Error:**
   a. If the boiler control is set to a CH mode in which an outdoor sensor is required and the sensor is shorted, the screen will blink. Pressing the "Reset" key will display the following error screen.

```
                    16:36
Warning  Number #W01
Outdoor  Sensor  Short
Warning
```

   b. The boiler will not operate until this problem is corrected.
   c. If the Outdoor Sensor is open, the status screen will read -40°F and the boiler will run at the boiler design temperature as set up in the installer menu.

```
STATUS                ▲
  System     160°F
  Vent       130°F
  Outdoor    -40°F    ▼
```

2. **DHW Sensor Error:**
   a. If the boiler control is set to operate on DHW Mode 1 (DHW Sensor), and there is no sensor connected the boiler will not satisfy a DHW call for heat.
   b. The display will blink and the DHW temperature will read 14°F if there is an open circuit at the sensor terminals. Pressing the "Reset" key will display the following error screen.

```
                    16:36
Warning  Number #W02
DHW  Sensor  Open
Warning
```

   c. This will also occur if the wires are not properly connected.
   d. If there is a short at the DHW sensor terminals and the DHW mode is set to Mode 1, the DHW system will not operate. The display will blink to indicate a warning error. Pressing the "Reset" key will display the following error screen.

```
                    16:36
Warning  Number #W03
DHW  Sensor  Shorted
Warning
```

3. **Flue Sensor Error:**
   a. If the control senses that the flue temperature does not rise to above 50°F after ignition, and either the supply water temperature rises above 120°F or the return water temperature rises above 80°F, the control will display "Flue Sensor Hold" and run at 1% Input.

```
                    16:36
FLUE  SENSOR  HOLD

     1% Input     163°F
```

   b. If "Flue Sensor Hold" continues for an extended period of time, the display will blink. Pressing the "Reset" key will display the following error screen.

```
                    16:36
Warning  Number  #W04
Flue  Sensor  open
Warning
```

4. **Cascade – System Sensor Error:**
   a. In a multiple boiler cascade installation a system sensor must be connected to the system. If no system sensor is connected or if there is an open circuit the display will blink and the display screen will read as follows:

```
                    16:36
 CASCADE  STANDBY
SYSTEM  SENSOR  FAIL
 01  Boilers  On   14°F
```

   b. If there is a short circuit in the system sensor wiring, the display screen will read similarly. Notice that a short circuit results in a high system temperature reading (244°F).

```
                    16:36
 CASCADE  STANDBY
SYSTEM  SENSOR  FAIL
 01  Boilers  On  244°F
```

   c. Under either of these conditions, the Master boiler will set the supply setpoints of all of the boilers to match the system setpoint. It will continue to bring on and shut off boilers based on the thermostat demand (terminals #1 and #2) and the Boiler Start/Stop Delay Time.

5. **Cascade – Loss of Communication with Master Boiler:**
   a. If a dependent boiler is not communicating with the Master boiler, and it is set as address 2-16, the screen will blink with the following information displayed.

```
                    16:36
 STANDBY
NO  COMM  CASCADE
                   120°F
```

   b. The boiler that is not communicating with the Master boiler will not run until the problem is corrected. Other boilers connected to the Master boiler and the Master boiler itself will operate normally.

Table 10.3: Control Board Warning Error Codes

"W" CODE	Error Display	Error Description	Corrective Action
#W01	16:36 Warning Number #W01 Outdoor Sensor Short Warning Blinking Screen – Press "Reset" key to view this message	Outdoor Sensor Shorted	1) Check wiring connection to Outdoor Sensor. 2) Remove the wires from terminals #3 and #4 on the boiler and check the resistance between them. • If this reading is below 3000 Ω check the reading at the sensor. • If the reading is the same at the sensor, replace the sensor. • If the reading is higher at the sensor, replace the wiring.
#W02	16:36 Warning Number #W02 DHW Sensor Open Warning Blinking Screen – Press "Reset" key to view this message	DHW Sensor Open	1) Be sure the optional DHW Sensor (54157) is connected. 2) Remove the wires from terminals #5 and #6 on the boiler and check the resistance between them. a. If the resistance is above 10 kΩ, check the resistance at the sensor. b. If the reading at the sensor is the same, replace the sensor. c. If the reading at the sensor is lower, replace the wiring.
#W03	16:36 Warning Number #W03 DHW Sensor Shorted Warning Blinking Screen – Press "Reset" key to view this message	DHW Sensor Shorted	1) Check wiring connection to DHW Sensor. 2) Remove the wires from terminals #5 and #6 on the boiler and check the resistance between them. a. If this reading is below 1000 Ω, check the reading at the sensor b. If the reading is the same at the sensor, replace the sensor. c. If the reading is higher at the sensor, replace the wiring.
#W04	16:36 Warning Number #W04 Flue Sensor open Warning	Flue Sensor Open	1) Check wiring connection to flue sensor. 2) Compare sensor resistance to Figure 8.7. If resistance value is incorrect, replace sensor.

11. MAINTENANCE

⚠ WARNING

Product Safety Information
Refractory Ceramic Fiber Product

This appliance contains materials made from refractory ceramic fibers (RCF). Airborne RCF fibers, when inhaled, have been classified by the International Agency for Research on Cancer (IARC), as a possible carcinogen to humans. After the RCF materials have been exposed to temperatures above 1800°F, they can change into crystalline silica, which has been classified by the IARC as carcinogenic to humans. If particles become airborne during service or repair, inhalation of these particles may be hazardous to your health.

Avoid Breathing Fiber Particulates and Dust

Suppliers of RCF recommend the following precautions be taken when handling these materials:

Precautionary Measures:
Provide adequate ventilation.
Wear a NIOSH/MSHA approved respirator.
Wear long sleeved, loose fitting clothing and gloves to prevent skin contact.
Wear eye goggles.
Minimize airborne dust prior to handling and removal by water misting the material and avoiding unnecessary disturbance of materials.
Wash work clothes separately from others. Rinse washer thoroughly after use.
Discard RCF materials by sealing in an airtight plastic bag.

First Aid Procedures:
Inhalation: If breathing difficulty or irritation occurs, move to a location with fresh clean air. Seek immediate medical attention if symptoms persist.
Skin Contact: Wash affected area gently with a mild soap and warm water. Seek immediate medical attention if irritation persists.
Eye Contact: Flush eyes with water for 15 minutes while holding eyelids apart. Do not rub eyes. Seek immediate medical attention if irritation persists.
Ingestion: Drink 1 to 2 glasses of water. Do not induce vomiting. Seek immediate medical attention.

A. GENERAL (WITH BOILER IN USE)

General boiler observation can be performed by the owner. If any potential problems are found, a qualified installer or service technician/agency must be notified.

1. Remove any combustible materials, gasoline and other flammable liquids and substances that generate flammable vapors from the area where the boiler is contained.
2. Observe general boiler conditions (unusual noises, vibrations, etc.)
3. Observe operating temperature and pressure on the combination gauge located in the supply piping on the left side of the boiler. Boiler pressure should never be higher than 5 psi below the rating shown on the safety relief valve (25 psig maximum for a 30 psig rating). Boiler temperature should never be higher than 240° F.
4. Check for water leaks in boiler and system piping.
5. Smell around the appliance area for gas. If you smell gas, follow the procedure listed in the Lighting Operating Instructions to shut down appliance in Section 9, Start-Up Procedure Part B.

B. WEEKLY (WITH BOILER IN USE)

Flush float-type low-water cut-off (if used) to remove sediment from the float bowl as stated in the manufacturer's instructions.

C. ANNUALLY (BEFORE START OF HEATING SEASON)

⚠ CAUTION

The following annual inspection must be performed by a qualified service technician.

1. Check boiler room floor drains for proper functioning.
2. Check function of the safety relief valve by performing the following test:
   a. Check valve piping to determine that it is properly installed and supported.
   b. Check boiler operating temperature and pressure.
   c. Lift the try lever on the safety relief valve to the full open position and hold it for at least five seconds or until clean water is discharged.
   d. Release the try lever and allow the valve to close. If the valve leaks, operate the lever two or three times to clear the valve seat of foreign matter. It may take some time to determine if the valve has shut completely.
   e. If the valve continues to leak, it must be replaced before the boiler is returned to operation.
   f. Check that operating pressure and temperature have returned to normal.
   g. Check again to confirm that valve has closed completely and is not leaking.
3. Test low-water cut-off (if used) as described by the manufacturer.
4. Test limit as described in Section 9, Part D, "Check Operation".
5. Test function of ignition system safety shut-off features as described in Section 9, Part D, "Check Operation".

⚠ DANGER

When servicing or replacing components, be absolutely certain that the following conditions are met:

- **Water, gas and electricity are off.**
- **The boiler is at room temperature.**
- **There is no pressure in the boiler.**

⚠ CAUTION

The convenience outlet is powered even when the service switch is off.

6. Remove the top/front jacket panel and inspect for any foreign debris that may have entered through air intake vent.
7. Inspect burner for deterioration. Replace if necessary.
8. With boiler in operation check that condensate is dripping from condensate tubing. Check for any restriction in condensate drain line.

D. CONDENSATE CLEANING INSTRUCTIONS

1. Removal of Condensate Tanks.
   a. Close manual gas shutoff valve on top of boiler and turn off power to the boiler by placing the boiler service switch to the off position.
   b. Remove the front jacket panel.
   c. Remove the wing nut securing the front tank and disconnect the tank from the upper right drain hose. (Some condensate may spill out of this port).
   d. Remove the cap from the tank and position a container in front of the boiler and tilt the tank to drain condensate into the container.
   e. Tank and lower hose may be by removed by disconnecting the lower hose from the rear tank.
   f. Clean tank and hose with water and inspect the rear tank for sediment in the lower connection port. The rear tank can be removed for cleaning if required by removing the wing nut and disconnecting the two float switch wire leads. NOTE: Special care must be taken when removing the hoses from the top of the rear tank. They must be held secure and do not pull hoses downward and away from their upper connections to the heat exchanger and vent adapter.
   g. After cleaning, replace tanks and reconnect hoses and wire leads to float switch. Fill the front tank with water and check for any leaks at connections.
   h. Replace the front jacket panel, open the manual gas valve and place the boiler service switch to the on position.

2. Before re-starting the *PureFire*® boiler follow the steps below:
   a. Reconnect the thermostat wires.
   b. Open the manual gas shutoff valve and reset the thermostats.
   c. Observe the boiler function to make sure you see a condensate flow.
   d. If you do not observe a condensate flow, repeat the above procedure.
3. If the problem is not corrected at this point, it is possible that there is a material deposit problem. Follow the Coil Cleaning Instructions (Subsection 9E) below to dissolve deposits and clean the heat exchanger.

⚠ WARNING

It is extremely important to make sure there is no blockage in the exhaust vent. Failure to do so may result in serious personal injury or death.

E. COMBUSTION CHAMBER COIL CLEANING INSTRUCTIONS

Before beginning this procedure, you must have on hand the following items:

- a nylon or brass brush (not steel)
- "Rydlyme" (recommended for best results) (available online www.rydlyme.com) or "CLR" (available at most hardware stores)

1. Shut the boiler down and access the heat exchanger using the following steps:
   a. Close the manual gas shutoff valve and wait for the unit to be cool to the touch.
   b. Disconnect the condensate piping from the outside connections (not from the *PureFire*® side) so the flow can be observed.
   c. Disconnect compression nut on gas valve inlet and disconnect the gas valve electrical connector.
   d. Remove the six 10 mm nuts from the burner plate assembly. Disconnect wire leads to the spark igniter and flame sensor. Disconnect two Molex plugs from blower motor.
   e. Pull the entire burner plate towards you to access the heat exchanger coils.
2. Using a spray bottle filled with the recommended product "Rydlyme" or "CLR", spray liberally on the coils, making sure the solution penetrates and funnels down through the condensate hose. If the condensate hose is blocked, let the chemical penetrate for at least 15 minutes or until it drains.
3. Use the nylon or brass brush (do not use steel) and scrub coils to remove any buildup, then vacuum the debris from the coils.
4. Spray coils with clear water, making sure to confine the spray to the area being cleaned (try to avoid wetting the back ceramic wall of the unit). Flush the combustion chamber with fresh water. At this point, the *PureFire*® should be ready to power back up.
5. Reinstall the burner plate assembly using the following steps:
   a. Inspect the inside of the heat exchanger for dirt and debris.
   b. Install the burner plate assembly and replace the six 10 mm nuts.
   c. Reconnect the wire leads to the spark igniter, flame sensor and gas valve. (Be sure that the spark igniter is connected to the lead with the large insulated connection boot.) Reconnect two Molex plugs on blower motor.
   d. Connect the compression nut on the gas valve inlet and reattach the gas valve electrical connector.
   e. Reset thermostats. **(IMPORTANT: BE SURE THAT THE VENT CONNECTION IS NOT BLOCKED.)**

⚠ WARNING

It is extremely important to check for leaks when reconnecting the gas valve. Failure to do so may result in severe personal injury, death or major property damage.

   f. Turn the power to the *PureFire*® on. Observe the display module to assure proper operation.
   g. Initiate a call for heat** and observe the condensate flow.
   h. Reconnect the condensate piping to the drain connection.

   ****NOTE: When firing the boiler the first few times you may experience some fluttering of the gas burner that may result in a flame lockout. This is normal and will require you to recycle the unit until this clears up. This is caused by water still present in the combustion chamber.**

6. Inspect exhaust vent and air intake vents for proper support and joint integrity. Repair as necessary. Refer to Section 5, VENTING.

⚠ WARNING

Leaks in the vent system will cause products of combustion to enter structure (vent system operates under positive pressure).

7. Inspect exhaust vent and air intake vent terminations for obstructions or corrosion. Corrosion is an indication of exhaust gas recirculation.

12. BOILER DIMENSIONS & RATINGS

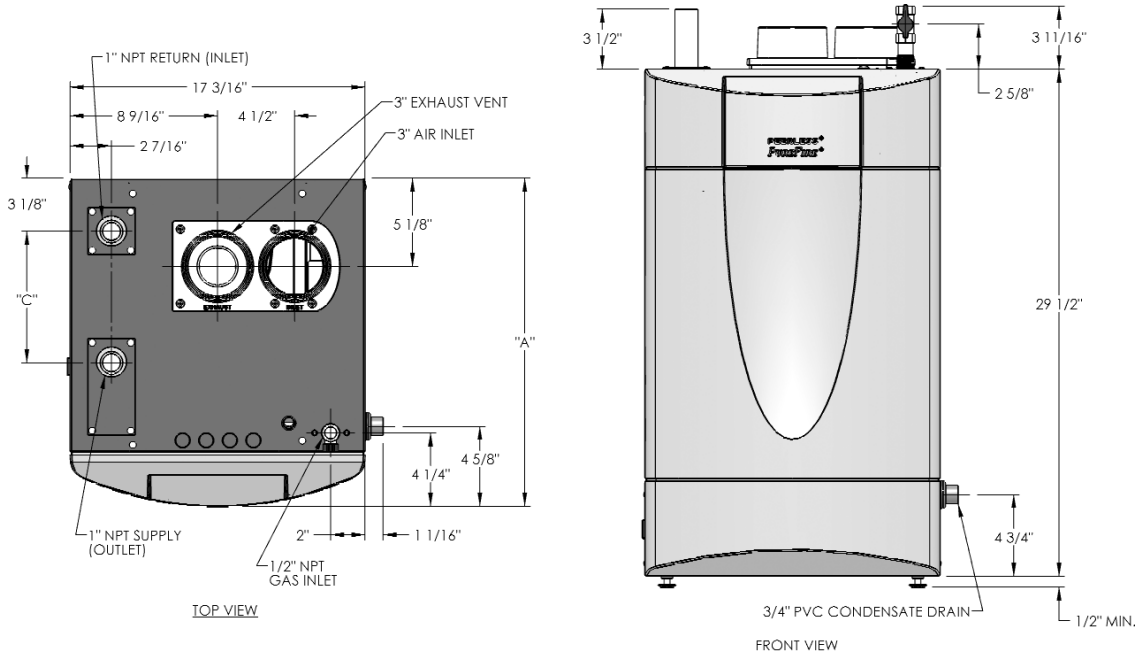

Figure 12.1: Dimensional Drawing – PF-50, PF-80, PF-110 & PF-140

Table 12.1: Boiler Dimensions

SERIES PEERLESS® *PUREFIRE*® DIMENSIONS (INCHES)											
Boiler Model	**"A"**	**"B"**	**"C"**	**"D"**	**"E"**	**"F"**	**"G"**	**"H"**	**"J"**	**"K"**	**"L"**
PF-50	13-1/2	–	4-7/8	–	–	–	–	–	–	–	–
PF-80	13-1/2	–	4-7/8	–	–	–	–	–	–	–	–
PF-110	19	–	7-1/2	–	–	–	–	–	–	–	–
PF-140	19	–	10-1/2	–	–	–	–	–	–	–	–
PF-210	16-1/2	1-3/4	3-1/2	2-1/4	8-1/2	8-1/2	4-1/2	3	6-1/2	3	1
PF-399	28	2-3/4	7	2	19-3/4	8-1/2	5-1/4	3-1/2	5-3/4	4	1-1/2

Table 12.2: Boiler Ratings

SERIES PEERLESS® *PUREFIRE*® BOILER RATINGS					
Series Peerless® *PureFire*®					
Boiler Model	**Input (MBH)**		**Heating Capacity (MBH)**	**Net Rating (MBH)**	**AFUE (%)**
	Min.	**Max.**			
PF-50	16	50	46	40	91.6
PF-80	20	80	74	64	92.7
PF-110	27.5	110	102	89	93.0
PF-140	35	140	131	114	93.0
PF-210	42	210	193	168	93.3
			Gross Output (MBH)	**Net Rating (MBH)**	**Thermal Efficiency (%)**
PF-399	80	399	373	324	93.4

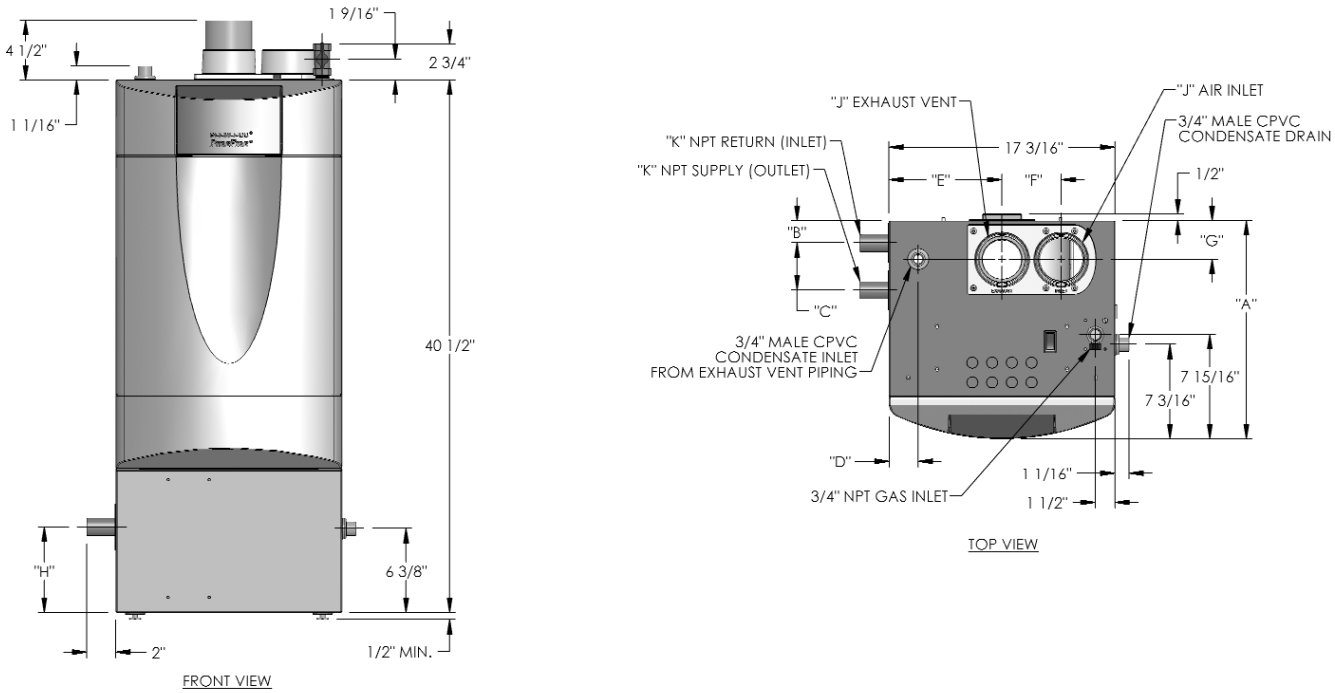

Figure 12.2: Dimensional Drawing – PF-210 & PF-399

Table 12.3: Combustion Air Fan Speeds

SERIES PEERLESS® *PUREFIRE®* COMBUSTION AIR FAN SPEEDS				
Boiler Model	**Input Rate**	**Fan Speed**		
		Low Power	**Ignition**	**High Power**
PF-50	50 MBH	1350	2790	3360
PF-80	80 MBH	1470	3240	4800
PF-110	110 MBH	1590	3240	5280
PF-140	140 MBH	1440	3240	4800
PF-210	210 MBH	1350	4650	6150
PF-399	399 MBH	1710	5790	7740

Table 12.4: *PureFire®* Main Control Specifications

SERIES PEERLESS® *PUREFIRE®* MAIN CONTROL SPECIFICATIONS	
Power Supply	120 VAC Nominal (102-132 VAC); 60 Hertz (40-70 Hz) Phase Neutral
Fuse (5650)	3.15 Amp, 250 VAC
Blower Voltage	120 VAC
Gas Valve Voltage	120 VAC
Thermostat Contacts	24 VAC
DHW Contacts	24 VAC
Flame Current Limits	Minimum (running): 2.8 μA Minimum (ignition): 3.1 μA Maximum: 10 μA
Temperature Sensors	All *PureFire®* NTC thermistors are 12kΩ @ 77°F (25°C). They operate on 5 VDC. Supply Sensor: 14°F (-10°C) to 244°F (118°C) Return Sensor : 14°F (-10°C) to 244°F (118°C) Flue Sensor: 50°F (10°C) to 280°F (138°C) Outdoor Sensor: -40°F (-40°C) to 185°F (85°C)
	Optional Sensors DHW Sensor: 14°F (-10°C) to 244°F (118°C) System Sensor : 14°F (-10°C) to 244°F (118°C)
Standards	Europe: CE EN298 North America: ANSI Z21.20 / CSA C22.2

Table 12.5: Electrical Ratings

SERIES PEERLESS® *PUREFIRE*® ELECTRICAL RATINGS									
Boiler Model	**Supply Voltage (-15%, +10%)**	**Frequency (±1.2 hz)**	**Blower**		**Gas Valve**		**Pumps**		**Max Total Service Current to Boiler**
			Voltage (VAC)	**Current (Amps)**	**Voltage (VAC)**	**Current (Amps)**	**Voltage (VAC)**	**Max. Current (Amps)**	
PF-50	120 VAC	60 hz	120	0.53	120	0.09	120	2.48	3.15
PF-80	120 VAC	60 hz	120	0.53	120	0.09	120	2.48	3.15
PF-110	120 VAC	60 hz	120	0.78	120	0.09	120	2.23	3.15
PF-140	120 VAC	60 hz	120	0.71	120	0.09	120	2.30	3.15
PF-210	120 VAC	60 hz	120	2.58	120	0.09	120	3.06	5.64
PF-399	120 VAC	60 hz	120	2.58	120	0.21	120	2.94	5.52

13. REPAIR PARTS

Repair parts are available from your local PB Heat, LLC distributor or from Parts To Your Door at 1 (610) 916-5380 (www.partstoyourdoor.com).

Note: Remember to include the boiler model number and serial number when ordering parts.

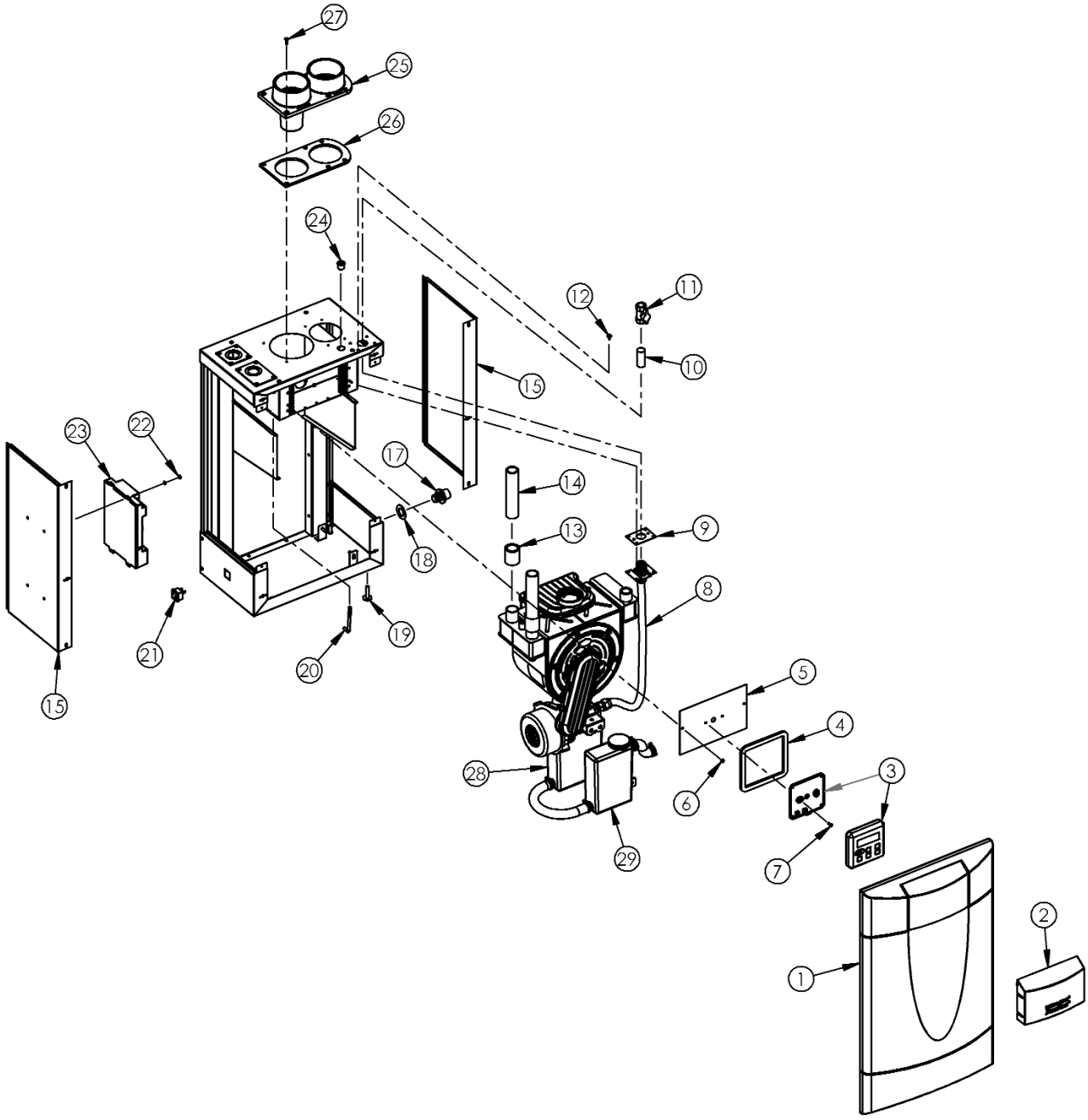

Figure 13.1: General Repair Parts – PF-50, PF-80, PF-110 & PF-140

Table 13.1: General Repair Parts

	Description	Quantity Required	Stock Code
1	Front Door Panel with Ball Studs	1	54168
2	Control Lens	1	54167
3	Display Module Revision 2 852RC-3R	1	54423
4	Display Bracket Gasket	1	54153
5	Bracket for Display Module	1	PF2007-1
6	Hex Nut, #6-32 with Lockwasher	2	51553
7	Screw, #6-32 x 1/2" LG Phillips Head	2	5449
8	Flexible Gas Line – 1/2" (includes gasket and hardware)	1	54203
9	Gasket for Gas Line	1	54142
10	Nipple, 1" NPT x Close	1	99211
11	Manual Shut-off Valve, 1/2" NPT	1	54130
12	Screw, #10 x 1/2" Long Hex. Hd.	2	99992
13	Coupling, 1" NPT Brass	2	5534
14	Nipple, 1" NPT x 6" Long Brass	2	5533
15	Jacket Side Panels – PF-50, PF-80	1	54173
	Jacket Side Panels – PF-110, PF-140	1	54192
17	Bulk Head Fitting for Condensate Connection	1	54140
18	Gasket for Bulk Head Fitting	1	54134
19	Leg Leveler	4	5429
20	Hook Bolt	2	5451
21	Convenience Outlet	1	54136
22	Hex. Nut, #8-32 with Lockwasher	4	51573
23	Control Module, 852MN Kit – PF-50 Revision 1 & 2	1	54282
	Control Module, 852MN Kit – PF-80 Revision 1 & 2	1	54283
	Control Module, 852MN Kit – PF-110 Revision 1 & 2	1	54284
	Control Module, 852MN Kit – PF-140 Revision 1 & 2	1	54285
24	Switch, Round Toggle, 120 VAC	1	6049
25	Vent / Air Inlet Adapter, 3"	1	54135
26	Gasket, Vent Adapter, 3"	1	54133
27	Screw, #10 x 5/8" Long Phil. Pan Head Type A Zinc	6	5507
28	Condensate Receiver Kit	1	54205
29	Condensate Neutralizer Kit	1	54204
–	Wiring Harness, Power (Right Terminal Block)	1	PF7002
–	Wiring Harness, Control (Left Terminal Block)	1	PF7003
–	Wiring Harness, Blower	1	PF7005
–	Wiring Harness, Ground Wire	1	PF7009
–	Push-on Terminal Block (for Field Wiring Connections)	2	5450
–	Ignition Cable	1	54115
–	Relief Valve	1	50664
–	Flue Sensor, 12kOhm Tasseron TSDZ0B1	1	54111
–	Supply Sensor/Switch, 12kOhm Tasseron Kit	1	54299
–	Return Sensor, 12kOhm Tasseron TSD00BS	1	54418
–	Outdoor Sensor, 12kOhm Tasseron TSA00B4	1	54112
–	DHW Sensor, 12kOhm Tasseron TSK10BH	1	54157
–	System Sensor, 12kOhm Tasseron TSA00BC	1	54156

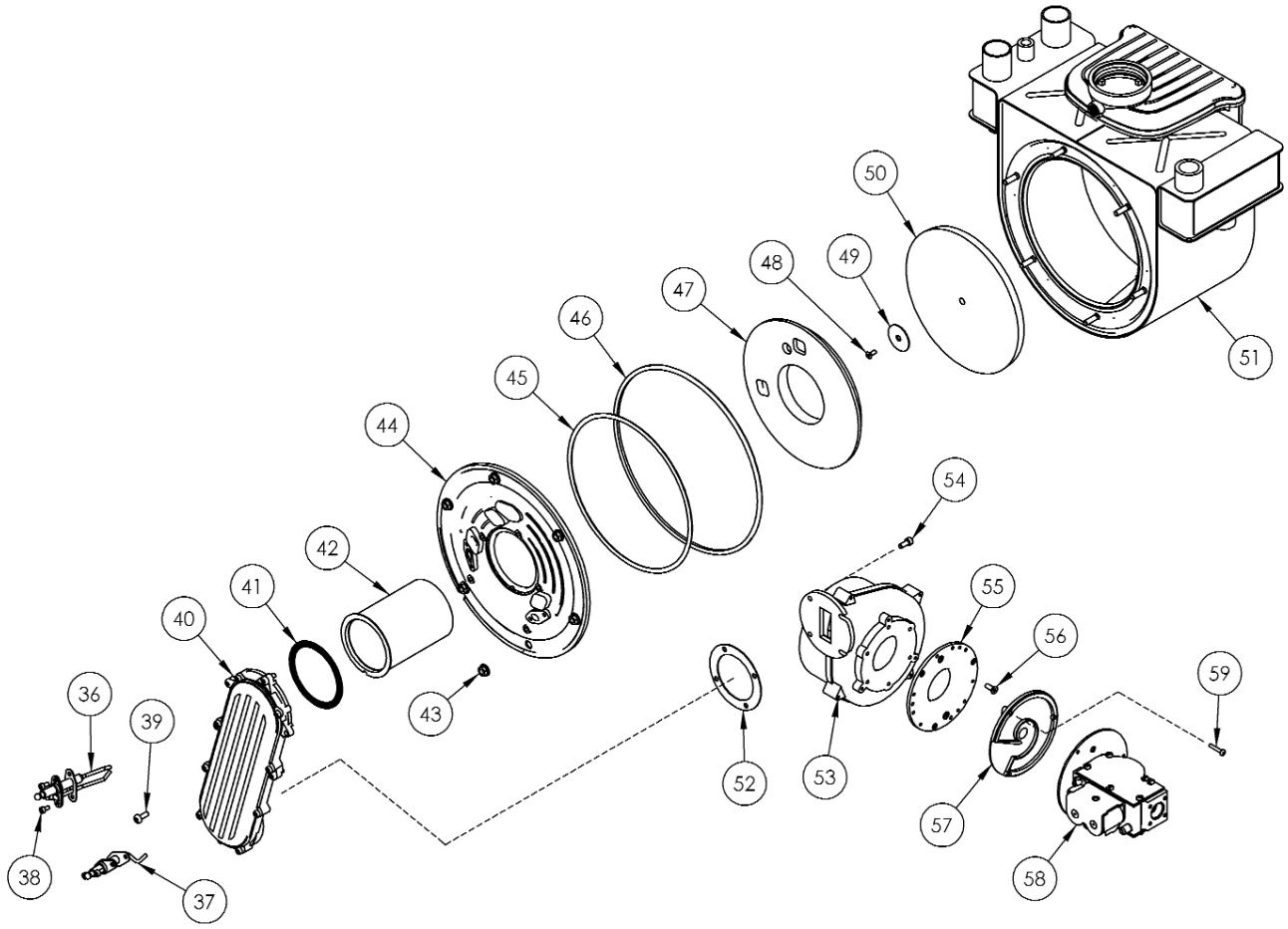

Figure 13.2: Heat Exchanger/Burner Assembly Repair Parts – PF-50, PF-80, PF-110 & PF-140

Table 13.2: Heat Exchanger/Burner Assembly Repair Parts – PF-50, PF-80, PF-110 & PF-140

	Description	Quantity Required	Stock Code
42	Burner – PF-50	1	54174
	Burner – PF-80	1	54175
	Burner – PF-110	1	54176
	Burner – PF-140	1	54177
44	Combustion Chamber Cover Plate, includes items #45-#47	1	54183
45	Gasket, Glass Rope	1	54188
46	Gasket, Rubber	1	54187
47	Insulation, Combustion Chamber Cover Plate	1	54184
50	Insulation, Target Wall	1	54185
51	Heat Exchanger – PF-50	1	5410
	Heat Exchanger – PF-80	1	5411
	Heat Exchanger – PF-110	1	5412
	Heat Exchanger – PF-140	1	5413
52	Gasket, Blower to Channel	1	54122
53	Blower – PF-50, PF-80	1	54189
	Blower – PF-110	1	54190
	Blower – PF-140	1	54191
55	Blower Adapter Plate	1	5421
57	Swirl Plate – PF-50, Blue	1	54144
	Swirl Plate – PF-80, Black	1	54143
	Swirl Plate – PF-110, White	1	54145
	Swirl Plate – PF-140, Red	1	54146
58	Gas Valve – PF-50, w/ Mtg. Flange, Swirl Plate & Screws	1	54178
	Gas Valve – PF-80, w/ Mtg. Flange, Swirl Plate & Screws	1	54179
	Gas Valve – PF-110, w/ Mtg. Flange, Swirl Plate & Screws	1	54180
	Gas Valve – PF-140, w/ Mtg. Flange, Swirl Plate & Screws	1	54181
Vent Termination Kits			
–	3"SS Vent Termination Kit	1	54161
–	4"SS Vent Termination Kit	1	91401
–	CPVC Vent/Inlet Adapter	1	54135
–	Poly-Propylene Vent/Inlet Adapter	1	54155
–	3" Vent Perf Stainless Steel Screen	1	54150
–	PVC 3" DWV P400-030 Tee	1	54151
–	PVC 3" DWV P100-030 Coupling	1	54152
–	PVC 3" Concentric Termination	1	91403
Poly-Propylene Venting			
–	80/125mm White Concentric Sidewall Vent kit – Includes Concentric Vent Termination, Outer Wall Bracket, Inner Wall Bracket with Securing Tab and Screws	–	54396
–	100/150mm White Concentric Sidewall Vent kit – Includes Concentric Vent Termination, Outer Wall Bracket, Inner Wall Bracket with Securing Tab and Screws	–	54397
–	80/125mm White, Black Concentric Vertical Termination	–	54398
–	100/150mm White, Black Concentric Vertical Termination	–	54399
–	80/100 White Concentric 90 Degree Elbow with Locking Band	–	54085
–	100/150 White Concentric 90 Degree Elbow with Locking Band	–	54435
–	Concentric Adapter Kit – 3" PVC to 80/125mm – Kit Includes 2 PVC to PP Adapters, 1 Two-pipe Adapter and (1) 80 x 500mm PP Pipe Length	–	54296
–	Concentric Adapter Kit – 4" PVC to 100/150mm – Kit Includes 2 PVC to PP Adapters, 1 Two-pipe Adapter and (1) 100 x 500mm PP Pipe Length	–	54297
Miscellaneous			
–	Large Hose Clamp	1	54138
–	Small Hose Clamp	1	54139
–	Condensate Neutralizer	1	54121
–	Electric Panel MNT Receptacle	1	54136
–	Burner Mounting Plate Kit PUREFIRE	1	54128
–	Switch Condensate Float w/ Cap Switch	1	54137
–	Condensate Collector	1	54120
–	Wall Mounting Kit	1	5636
–	Gas Line Flex Kit w/ 1-1/2" NPT	1	54203

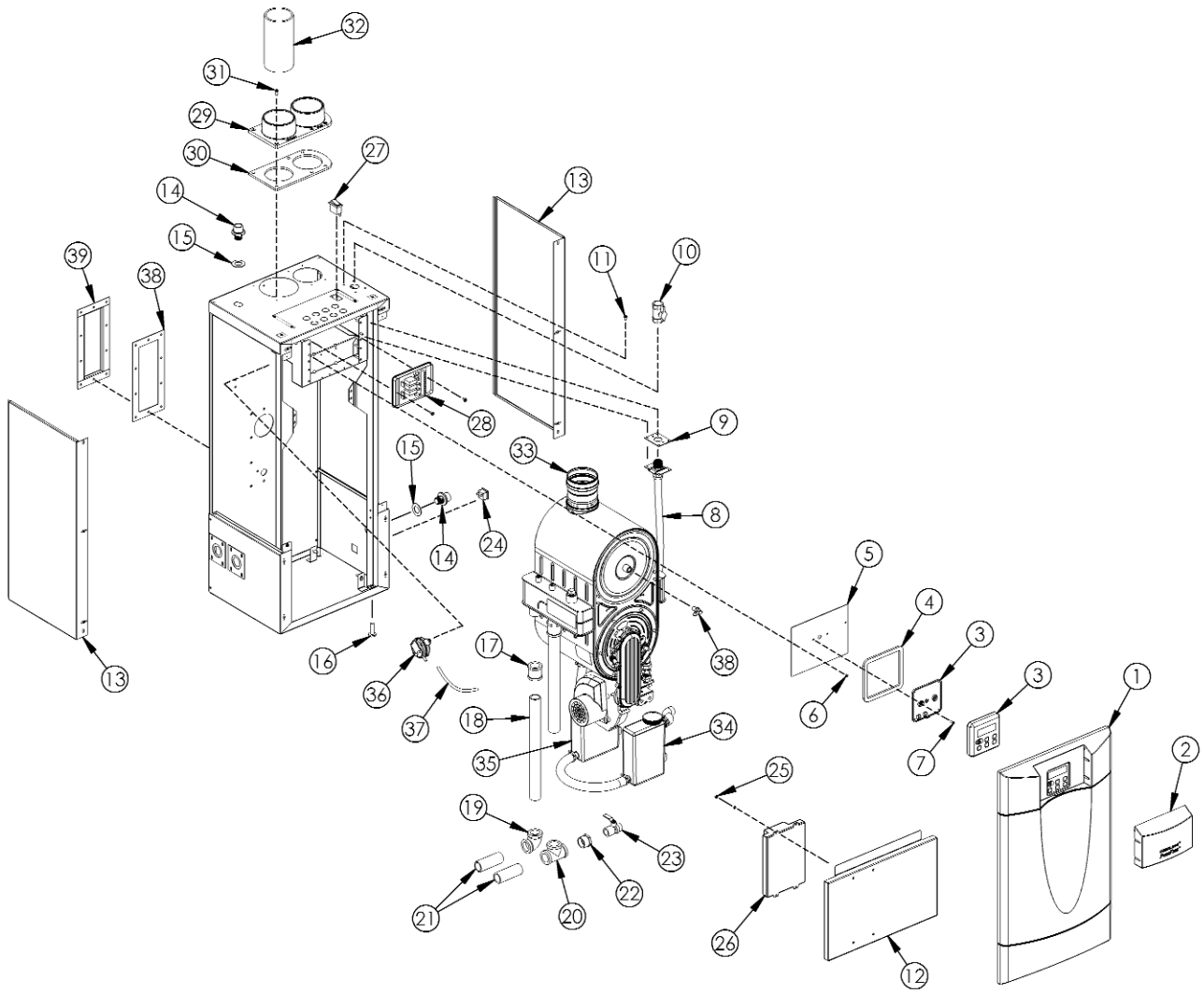

Figure 13.3: General Repair Parts – PF-210 & PF-399

Table 13.3: General Repair Parts – PF-210 & PF-399

	Description	Quantity Required	Stock Code
1	Panel, Jacket Front Door, with Ball Studs	1	54256
2	Lens for Jacket Front Door	1	54167
3	Display Module, Argus 852RC	1	54281
4	Gasket for Display Bracket	1	54153
5	Bracket for Display Module	1	PF2007-1
6	Hex Nut, #6-32 with Lockwasher	2	51553
7	Screw, #6-32 x 1/2" LG Phillips Head	2	5449
8	Flexible Gas Line – 1/2" – PF-210	1	54261
	Flexible Gas Line – 3/4" – PF-399	1	54262
9	Gasket for Gas Line	1	54142
10	Manual Shut-off Valve, 3/4" NPT	1	54210
11	Screw, #10 x 1/2" LG Hex. Hd.	2	99992
12	Jacket, Lower Front Panel	1	PF6051
13	Jacket Side Panel – PF-210	1	54244
	Jacket Side Panel – PF-399	1	54245
14	Bulk Head Fitting for Condensate Hose	1	54140
15	Gasket for Bulk Head Fitting	1	54134
16	Leg Leveler	4	5429
17	Coupling, 1" NPT Brass – PF-210	2	5534
	Coupling, 1-1/2" NPT Brass – PF-399	2	5551
18	Nipple, 1" NPT x 14" LG Brass – PF-210	2	5557
	Nipple, 1-1/2" NPT x 14" LG Brass – PF-399	2	5550
19	Elbow, 1" NPT Brass – PF-210	1	5558
	Elbow, 1-1/2" NPT Brass – PF-399	1	5553
20	Tee, 1" NPT Brass – PF-210	1	5537
	Tee, 1-1/2" NPT Brass – PF-399	1	5554
21	Nipple, 1" NPT x 3" Brass – PF-210	2	5559
	Nipple, 1-1/2" NPT x 3" Brass – PF-399	2	5552
22	Reducing Bushing, 1" x 3/4" NPT Brass – PF-210	1	5539
	Reducing Bushing, 1-1/2" x 3/4" NPT Brass – PF-399	1	5556
23	Shut-off Valve, 3/4" NPT Brass	1	50764
24	Nipple, 3/4" NPT x 16" LG Brass	1	5560
25	Convenience Outlet	1	54136
26	Hex. Nut, #8-32 with Lockwasher	4	51573
27	Control Module, 852MN – PF-210	1	54286
	Control Module, 852MN – PF-399	1	54287
28	Switch, Round Toggle, 120 VAC	1	6049
29	Vent / Air Inlet Adapter, 3" – PF-210	1	54200
	Vent / Air Inlet Adapter, 4" – PF-399	1	54201
30	Gasket, Vent Adapter, 3" – PF-210	1	54133
	Gasket, Vent Adapter, 4" – PF-399	1	54217
31	Screw, #10 x 3/4" LG Phillips Pan Hd. Type A Zinc	6	5611
32	Vent Stub, 3" – PF-210	1	54221
	Vent Stub, 4" – PF-399	1	54220
33	Heat Exchanger Outlet Collar, 3" – PF-210	1	5531
	Heat Exchanger Outlet Collar, 4" – PF-399	1	5532
34	Condensate Neutralizer Assembly	1	54204
35	Condensate Receiver Assembly	1	54259
36	Blocked Vent Switch includes items 37 & 38	1	54260
37	3/16" ID Tubing x 12" Long	1	5563
38	90° Barbed Elbow Adapter Fitting	1	5564
–	Wiring Harness, Power (Right Terminal Block)	1	PF7022
–	Wiring Harness, Control (Left Terminal Block)	1	PF7021
–	Wiring Harness, Gas Valve & Flame Sensor	1	PF7023
–	Wiring Harness, Ground Wire	1	PF7024
–	Push-on Terminal Block (Field Wiring) 10-pole	2	5450
–	Push-on Terminal Block (Field Wiring) 6-pole	2	5547
–	Ignition Cable	1	54115
–	Relief Valve	1	50664
–	Flue Sensor, 12kOhm Tasseron TSDZ0B0	1	54209
–	Flue Sensor Grommet	1	54291
–	Supply Sensor/Switch, 12kOhm Tasseron Kit	1	54299
–	Return Sensor, 12kOhm Tasseron TSD00BS	1	54418
–	Outdoor Sensor, 12kOhm Tasseron TSA00B4	1	54112

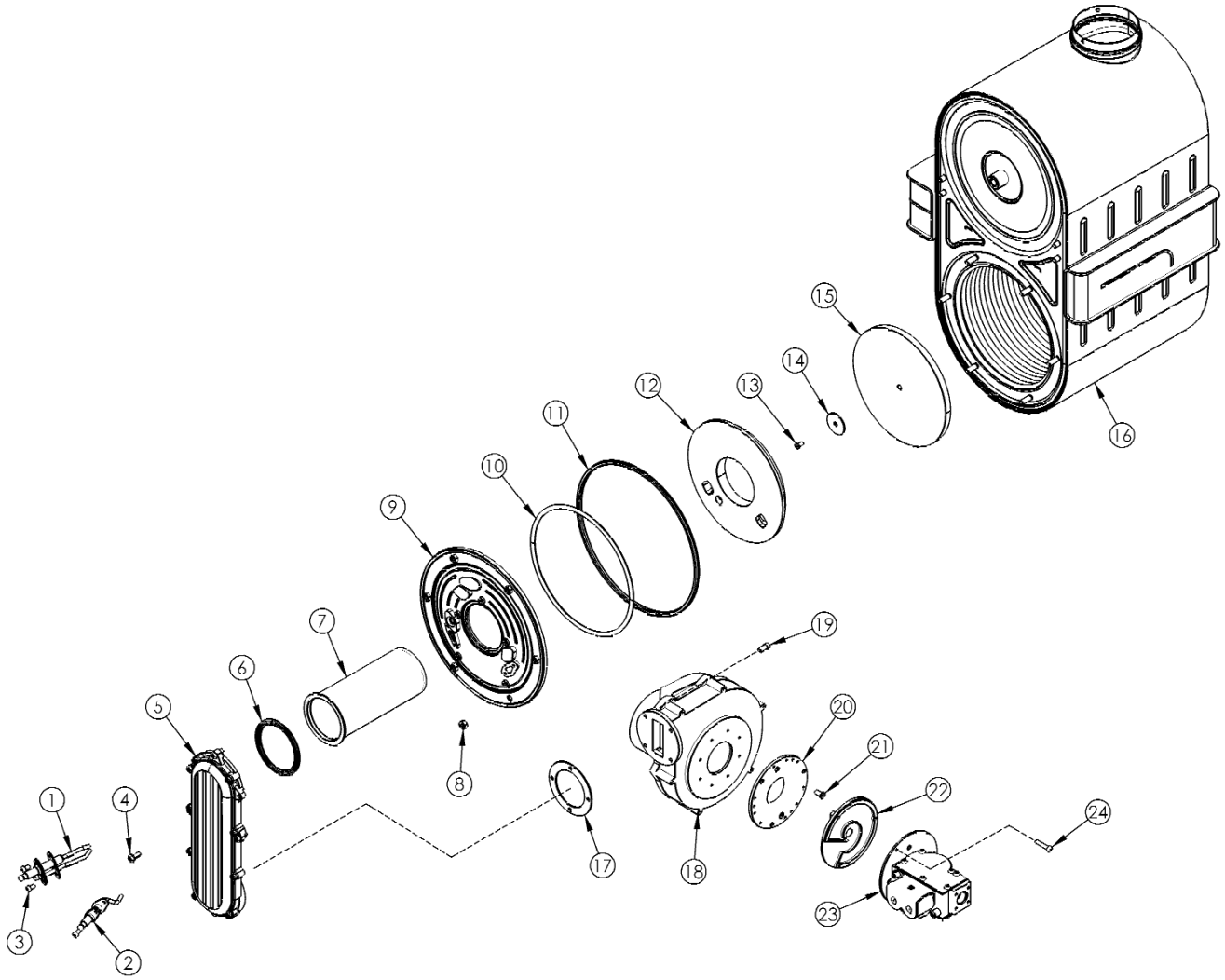

Figure 13.4: Heat Exchanger/Burner Assembly Repair Parts – PF-210 & PF-399

Table 13.4: Heat Exchanger/Burner Assembly Repair Parts – PF-210 & PF-399

	Description	Quantity Required	Stock Code
1	Ignitor, with Gasket	1	54246
2	Sensor, with Gasket	1	54247
5	Premix Channel – PF-210	1	54249
	Premix Channel – PF-399	1	54250
6	Gasket, Channel to Burner	1	54186
7	Burner – PF-210	1	54263
	Burner – PF-399	1	54264
9	Combustion Chamber Cover Plate, includes items #10-#12	1	54248
10	Gasket, Glass Rope	1	54188
11	Gasket, Rubber	1	54187
12	Insulation, Combustion Chamber Cover Plate	1	54255
15	Insulation, Target Wall	1	54185
16	Heat Exchanger – PF-210	1	5529
	Heat Exchanger – PF-399	1	5530
17	Gasket, Blower to Channel	1	54122
18	Blower – PF-210	1	54258
	Blower – PF-399	1	54257
20	Blower Adapter Plate – PF-210	1	5421
	Blower Adapter Plate – PF-399	1	5610
22	Swirl Plate – PF-210, Grey	1	54251
	Swirl Plate – PF-399, Black	1	54252
23	Gas Valve – PF-210, includes item #22	1	54253
	Gas Valve – PF-399, includes item #22	1	54254

APPENDIX A. STATUS SCREENS

PureFire Condensing Boiler - Status Display

```
PEERLESS
PUREFIRE
--initializing--
Version [xxxx]
```

Peerless PureFire Initialization Screen: This screen is displayed when power is first supplied to the boiler. The software version, indicated by xxxx, indicates the version of the program for the interface module. This information should be noted if contacting PB Heat for technical support.

```
                16:36
STANDBY

                160°F
```

Status Display Screen: Under normal conditions with no call for heat, the display on the user interface module will show that the boiler is in "STANDBY" mode. In addition, the current time, in 24 hour format, will be displayed in the upper right corner. The boiler supply temperature is shown in the lower right corner of the display.

Central Heating Demand

```
                16:36
CENTRAL HEATING
Trial For Ignition
```

Central Heating (CH) Trial for Ignition: When a contact closure between terminal #1 & #2 occurs, the control begins a trial for ignition. The display shows that the boiler demand is for central heating and indicates that a trial for ignition has been initiated. The Ignition cycle shown in Table 8.5 is identical for central heating and domestic hot water demand.

```
                16:36
CENTRAL HEATING

100%Input       160°F
```

Central Heating (CH) Demand: When the burner is on, the display continues to show the demand type. On the lower left, the percentage of modulation is shown. This screen also shows the time, in 24 hour format, and the actual supply temperature as read by the supply sensor.

Domestic Hot Water Demand

```
                16:36
DOMESTIC HOT WATER
Trial For Ignition
```

Domestic Hot Water (DHW) Trial for Ignition: Depending on the DHW mode, either a contact closure between terminals #5 and #6 or a drop in DHW temperature triggers a call for domestic hot water. Similarly to the CH demand, the display shows that the heat demand is for domestic hot water and that a trial for ignition has been initiated. The ignition cycle is shown in Table 8.5.

```
                16:36
DOMESTIC HOT WATER

100%Input       160°F
```

Domestic Hot Water (DHW) Demand: When the burner is on, the display continues to shows the DHW demand. On the lower left, the percentage of modulation is shown. This screen also shows the time, in 24 hour format, and the actual supply temperature as read by the supply sensor.

Supply at Setpoint

```
                    16:36
SUPPLY AT SETPOINT
Fan Post Purge
```

```
                    16:36
SUPPLY AT SETPOINT
Circulator ON
```

Supply at Setpoint - Fan Post Purge: If the boiler supply temperature exceeds the desired target (either a setpoint or a target calculated by the heating curve) the display will indicate "SUPPLY AT SETPOINT" and show that the boiler has entered the post purge period. After the postpurge, the display will indicate that the boiler circulator (CH PUMP) is operating. The boiler circulator will continue to operate until the demand is satisfied.

Special Demand Functions

```
                    16:36
CENTRAL HEATING
Freeze Protection
  1%Input         160°F
```

Freeze Protection: If the supply or return temperature drops below the freeze protection setpoint the general pump and/or the CH pump are activated depending on pump mode. If the temperature continues to drop by more than 9°F (5°C) the burner fires at minimum power and continues until the return temperature increases by 18°F (10°C).

```
                    16:36
DOMESTIC HOT WATER
Store Warm Hold
  1%Input         160°F
```

Store Warm Hold: When using a DHW tank sensor, the PureFire boiler control can detect if the DHW heat demand is required only to overcome the heat loss and not a result of a hot water draw. In this instance, the burner will fire at low power (1%) and continue until the tank setpoint is satisfied.

Ignition/Flame Failure Handling

```
                    16:36
NO IGNITION
Fan Post Purge
```

Ignition Failure: If control does not sense a flame at the end of the ignition period, the display will show "No Ignition" and the control will advance to the "Post Purge" period. The control will then repeat the Ignition Cycle. If there are three successive ignition failures, the control will lock out.

```
                    16:36
FLAME FAILURE
Fan Post Purge
```

Flame Failure: If the control senses a flame at the beginning of the "Burner On" period and then later loses the signal, a Flame Failure will result. This failure causes the control to advance to the "Post Purge" period. The control will then repeat the Ignition Cycle. If there are three successive flame failures the control will lock out.

```
                    16:36
CENTRAL HEATING
Ignition Retry
```

```
                    16:36
DOMESTIC HOT WATER
Ignition Retry
```

Ignition Retry: If the control recycles due to Ignition or Flame Failure, "Ignition Retry" will be shown below the text indicating the source of the heat demand.

Error Handling

```
                    16:36
BLOCKING ERROR
Fan Post Purge
```

```
                    16:36
BLOCKING ERROR  #
```

Blocking Error: "Blocking Error" is displayed whenever a condition is reached that prevents the boiler from operating but will not result in a control lockout. Once the condition is corrected, the control will reset automatically. A list of blocking errors is included in Table 10.1.

```
                    16:36
LOCKOUT ERROR
Fan Post Purge
```

```
                    16:36
LOCKOUT ERROR   #
```

Lockout Error: "Lockout Error" is displayed whenever a condition is reached that results in a control lockout. After the condition is corrected, the control requires the reset button to be pushed in order to resume operation. A list of lockout errors is included in Table 10.2.

Service Notification

```
SERVICE             16:36
STANDBY

                   160°F
```

Service Indicator: Predetermined service intervals can be programmed into the control to prompt end users to call for routine service. This interval can be set to "TIME", "HRS" or "CYCLES" in the Installer Menu.

Cascade (Multiple Boilers)

```
                    16:36
CASCADE STANDBY

0 Boilers ON  160°F
```

Status Display Screen (Master Cascade Boiler): The Master Boiler in a multiple boiler Cascade System will display the status information for the system as default. "CASCADE STANDBY" appears on the screen instead of "STANDBY" and the number of boilers currently operating will show on the bottom line. The System Supply Temperature is shown in the lower right corner of the display. Pressing the ⓘ or ⓘ key shows information for the individual boiler.

```
                    16:36
STANDBY

                  160°F
```

Status Display Screen (Dependent Cascade Boiler): Dependent boilers in a multiple boiler Cascade System will display only the status information for the individual boiler. This information for the Master Boiler can be displayed by pressing the ⓘ or ⓘ key.

Cascade (Multiple Boilers) continued

```
                    16:36
CALL FOR HEAT
6 Boilers ON 140°F
```

```
                    16:36
DOMESTIC HOT WATER
1 Boiler ON 140°F
```

Call For Heat (Master Cascade Boiler): The Master boiler will display "CALL FOR HEAT" if there is a central heating demand and "DOMESTIC HOT WATER" for a DHW demand. The number of boilers currently running is shown at the bottom of the screen in addition to the current System temperature.

```
                    16:36
CALL FOR HEAT
 75%INPUT        140°F
```

Call For Heat (Dependent Cascade Boiler): Dependent boilers will show only "CALL FOR HEAT" if a demand is given from the Master boiler. The input percentage of modulation and the supply temperature for the individual boiler are shown at the bottom of the screen.

```
                    16:36
CALL FOR HEAT
LOCKOUT ALARM BI 01
1 Boiler ON 140°F
```

Lockout Alarm (Master Cascade Boiler): If any of the boilers (including the Master Boiler) in a cascade system fail in a lockout condition, the screen will show "LOCKOUT ALARM BI 0X" where "X" is the address of the boiler in Lockout. Press the Down Arrow to display the "Lockout Alarm #" screen below.

```
                    16:36
LOCKOUT ALARM     #
```

Lockout Alarm: "Lockout Alarm" is displayed on any boiler that has reached a condition that results in a control lockout. Pressing the reset key on the individual boiler will reset the Lockout error. A list of lockout errors is included in Table 10.2.

APPENDIX B. USER MENU

User Menu

```
MENU
→Status
 Settings
 Messages
```

The user menu is accessed by pressing the "Menu" key. Use the up/down arrow keys to identify the desired option. Then press the "Select" key to choose that option.

Status

```
STATUS
 Current Supply
 Setpoint        160°F ▼
```

```
STATUS                ▲
 System      160°F
 Vent        130°F
 Outdoor     160°F    ▼
```

```
STATUS                ▲
 Supply      160°F
 Return      130°F
 DHW         160°F    ▼
```

```
STATUS                ▲
 General Circ.   Off
 CH Circulator   Off
 DHW Circulator  Off
```

Settings

```
SETTINGS
 Central Heating
 Setpoint
     OD RESET 129°F ▼
```

Range: 50 °F to 195 °F **Default:** 160 °F
10 °C to 90.6 °C 71.1 °C
Displays OD Reset if the CH setpoint is controlled by a heating curve

```
SETTINGS              ▲
 DHW Boiler Setpoint
                180°F ▼
```

Range: 122 °F to 195 °F **Default:** 180 °F
50 °C to 90.6 °C 82.2 °C
Controls boiler supply setpoint for DHW call for heat. This screen is only visible in DHW mode 1 & 2.

```
SETTINGS              ▲
 DHW Tank Setpoint
                140°F ▼
```

Range: 50 °F to 158 °F **Default:** 120 °F
10 °C to 70 °C 48.9 °C
Controls DHW tank setpoint. This screen is only visible in DHW mode 1.

```
SETTINGS              ▲
 Time & Date
 Monday
 10 May 2008   16:02 ▼
```

```
SETTINGS              ▲
 Temperature Units
     Fahrenheit  °F   ▼
```

Range: °F or °C **Default:** °F

Messages

```
MESSAGES            01 ▲
lockout XXX     XXXMIN
error description
error description     ▼
```

This option displays the last Block Message and the last Lock Message.

APPENDIX C. INSTALLER MENU

Installer Menu

```
INSTALLER MENU
→Status
 Boiler Settings
 CH Settings                ▼
```

```
INSTALLER MENU              ▲
 DHW Settings
 Service Notif.
→System Test                ▼
```

```
INSTALLER MENU              ▲
 System Tests
 Cascade Settings
→Default
```

To access the Installer Menu, press and hold the "Menu" and "Select" keys simultaneously for 10 seconds. The first screen shown to the left of this text will appear. Press the up/down arrow keys to identify the desired menu option. The ▼ or ▲ symbol on the right of the screen indicates that more menu choices can be accessed by continuing to press the down or up arrow respectively. Pressing the "Select" key chooses the option.

Status

```
STATUS                      1

 Current Supply
 Setpoint            160°F ▼
```

Screen #1 shows the current supply setpoint temperature. This value will change for a DHW demand or a CH demand. In addition, when outdoor reset modes are selected, this value is calculated based on the outdoor sensor reading.

```
STATUS                      2 ▲
 Fan Speed
  Current              0RPM
  Low Power      1770RPM ▼
```

```
STATUS                      3 ▲
 Fan Speed
  Ignition       3250RPM
  Hi Power       4800RPM ▼
```

Screens #2 & #3 display fan speed information. Current fan speed will vary during operation, while Low Power, Ignition, and High Power fan speeds are preset at the factory for a particular model size. Table 12.2 in Section 12 of this manual shows the fan speed presets for each model size.

```
STATUS                      4 ▲
 Flame
  Signal              9,6uA
  Failures                 0 ▼
```

Screen #4 shows the Flame Signal and the total number of Flame Failures that have occurred on the unit. Note that the refresh rate of the Flame Signal may be several seconds.

```
STATUS                      5 ▲
 Flame
  Meas. 1             2,5uA
  Meas. 2             3,8uA ▼
```

```
STATUS                      6 ▲
 Flame
  Meas. 3             6,2uA
  Meas. 4             8,1uA ▼
```

Screens #5 & #6 show the flame signal values during the last 2 seconds of the previous ignition sequence. These values are logged in 1/2 second intervals to allow service personnel to troubleshoot ignition issues.

```
STATUS                      7 ▲
 Ignition Attempts
  Successful           1200
  Failed                   1 ▼
```

Screen #7 displays the total number of successful and unsuccessful ignition attempts that have occurred on the boiler.

```
STATUS                      8 ▲
 Boiler Run Time
  CH                  250HR
  DHW                 700HR ▼
```

The total boiler run time for central heating (CH) and domestic hot water (DHW) are recorded on screen #8.

Status continued

```
STATUS          #E26    9▲
 2Day  Ago
 BLOCKED  CONDENSATE
 DRAIN                   ▼
```

```
STATUS          #E26    0
 3Hrs  to  prev.  Block
 BLOCKED  CONDENSATE
 DRAIN                   ▼
```

```
STATUS          #A02   10▲
16Hrs  Ago

 FLAME  FAILURES         ▼
```

```
STATUS          #E26    0
38Min  to  prev.  Block

 FLAME  FAILURES         ▼
```

Screens #9 & #10 provide information about blocking errors (errors that do not require a control reset) and locking errors (errors that require a control reset). Each of these screens shows the last error records along with amount of time that has passed since the error occurred. To review the error history press the select key. Section 8 provides more detail about reviewing the error history.

Boiler Settings

```
BOILER  SETTINGS        1▲
 Pump  Mode      MODE:0

 CH  or  CH&DHW  PUMP   ▼
```

Range: **0** to **3** **Default:** **0**

Reference section 8.C.1 for an explanation of the pump mode function.

```
BOILER  SETTINGS        2▲
 Installation
 Location:
                      USA▼
```

Range: **USA** or **CAN** **Default:** **USA**
Provides location code information to the control for setting the vent limit temperature. Reference section 8.C.2 for further explanation

```
BOILER  SETTINGS        3▲

 Vent  Material:
                       PVC
```

Range: **PVC, CPVC, POLYPROPYLENE** **Default:** **PVC**
Provides vent material information to the control for setting the vent limit temperature. Reference section 8.C.3 for further explanation

```
BOILER  SETTINGS        4▲

 Freeze  Protection
    starts  at:     50°F▼
```

Range: **45** °F to **68** °F **Default:** **50** °F
7 °C to **20** °C **10** °C
Reference section 8.C.3 for an explanation of the Freeze Protection Function.

```
BOILER  SETTINGS        5▲
 Blower
 Post  Purge  time
                     30sec▼
```

Range: **30** sec to **120** sec **Default:** **30** sec
Allows installer to increase postpurge time. Reference section 8.C.3 for an explanation of the Blower Post Purge Time Function.

```
BOILER  SETTINGS        6▲
 Additional  Safety
 Safety  Functionsons
           LowWaterCO   ▼
```

Range: **LowWaterCO** or **Default:** **LowWaterCO**
FlowSwitch
Reference Section 8.C.4 for an explanation of the Additional Safety Functions.

CH (Central Heating) Settings

```
CH  SETTINGS            1▲
              CH  Mode:1

 Indoor  Thermostat     ▼
```

Range: **0** to **6** **Default:** **0**

Reference section 8.D.1 for an explanation of the CH Mode Function.

```
CH  SETTINGS            2▲
 CH  Pump
 Post  Purge  Time
                      1min▼
```

Range: **0** min to **60** min **Default:** **1** min

Reference section 8.D.4 for an explanation of the CH Pump Post Purge Function.

```
CH  SETTINGS            3▲
 General  Circulator
 Post  Purge  Time
                      1min▼
```

Range: **0** min to **60** min **Default:** **1** min

Reference section 8.D.4 for an explanation of the GEN Pump Post Purge Function.

```
CH  SETTINGS            4▲

 Ramp  Delay  Step
 Modulation           Off▼
```

Range: **On** or **Off** **Default:** **Off**
See section 8.D.4 for an explanation of the Ramp Delay Step Modulation Function.

CH (Central Heating) Settings continued

Outdoor Reset *- An explanation of the Outdoor Reset Function can be found in 8.D.3.*

```
CH  SETTINGS          5 ▲
 System  Type
 User  Defined
                       ▼
```

Range: Finned Tube Baseboard, Hydro Air Unit, Cast Iron Radiators, Cast Iron Baseboard, High Mass Radiant, Low Mass Radiant, User Defined (Default). The system type presets allow the installer to quickly set the design values for the above heat distribution types.

```
CH  SETTINGS          6 ▲
 Warm  Weather
 Shutdown  Temp
                 70°F ▼
```

Range:	**"OFF" or**	**35**	°F to	**100**	°F	**Default:**	**70**	°F
		-18	°C to	**38**	°C		**21**	°C

Reference section 8.D.4 for an explanation of the Warm Weather Shutdown Function.

```
CH  SETTINGS          7 ▲
 Reset  Curve  Design
   Boiler       180°F
   Outdoor       10°F ▼
```

Boiler	**35**	**°F**	to	**195**	**°F**	**Default:**	**180**	**°F**
Range:	**2**	**°C**	to	**91**	**°C**		**82**	**°C**
Outdoor	**-40**	**°F**	to	**70**	**°F**	**Default:**	**10**	**°F**
Range:	**-40**	**°C**	to	**21**	**°C**		**-12**	**°C**

```
CH  SETTINGS          8 ▲
 R.Curve  Mild  Weath.
   Boiler        70°F
   Outdoor       70°F ▼
```

Boiler	**36**	**°F**	to	**195**	**°F**	**Default:**	**70**	**°F**
Range:	**2**	**°C**	to	**91**	**°C**		**21**	**°C**
Outdoor	**-20**	**°F**	to	**95**	**°F**	**Default:**	**70**	**°F**
Range:	**-29**	**°C**	to	**35**	**°C**		**21**	**°C**

```
CH  SETTINGS          9 ▲
 Reset  Curve
   Boiler  Min    off°F
   Boiler  Max     70°F ▼
```

Min	**40**	**°F**	to	**180**	**°F**	**Default:**	**40**	**°F**
Range:	**4**	**°C**	to	**82**	**°C**			
Max	**81**	**°F**	to	**195**	**°F**	**Default:**	**195**	**°F**
Range:	**27**	**°C**	to	**91**	**°C**		**91**	**°C**

Boost Function *- An explanation of the Boost Function can be found in section 8.D.3.*

```
CH  SETTINGS         10 ▲
 Boost  Function
   Temp          18°F
   Time         20min ▼
```

Temp	**0**	**°F**	to	**36**	**°F**	**Default:**	**18**	**°F**
Range:	**0**	**°C**	to	**20**	**°C**		**10**	**°C**
Time	**0**	**min**	to	**60**	**min**	**Default:**	**20**	**min**
Range:								

Anti-Cycling Function - An explanation of the Anti-Cycling Function can be found in Section 8.D.4

```
CH  SETTINGS         11 ▲
 Anti-Cycling
   Time
                 10sec ▼
```

Range:	**0**	sec	to	**900**	sec	**Default:**	**10**	sec

The Anti-cycling time is settable in 10 second increments. For a detailed explanation of the Anti-Cycling Function, see section 8.D.4.

```
CH  SETTINGS         12 ▲

 Max  Allowable
 CH  Rate:          100%
```

Range:	**50**	%	to	**100**	%	**Default:**	**100**	%

Allows the installer to limit the maximum input rate for central heating (CH). Used when boiler is sized primarily for DHW heating and the CH load is small.. See section 8.D.4.

DHW (Domestic Hot Water) Settings

```
DHW  SETTINGS          1
 DHW  mode      MODE:0
 No  DHW
                       ▼
```

Range:	**0**	to	**2**			**Default:**	**0**	

DHW Modes are used to choose between no DHW (Mode 0) and DHW Tank with either Temp. Sensor (Mode 1) or Thermostat (Mode 2). Section 8.E.1 provides more information.

```
DHW  SETTINGS          2 ▲
 DHW  Priority:  Time
 CH/DHW  Switch
 Time                10min ▼
```

Range:	**0**	**min**	to	**60**	**min**	**Default:**	**10**	**min**

Settable in 5 minute increments

Reference section 8.E.2 for an explanation of the DHW Limited Priority Function.

DHW Heat Dump Funtion *- An explanation of the DHW Heat Dump Function can be found in section 8.E.4.*

```
DHW  SETTINGS          3 ▲
 DHW  Heat  Dump      Off
 Max  Time             30s
 Min  Diff              5°F
```

Max Purge	**0**	**min**	to	**60**	**min**	**Default:**	**1**	**min**
Time Range:	Settable in 5 second increments							
Min Diff.	**0**	**°F**	to	**10**	**°F**	**Default:**	**5**	**°F**
Range:	**0**	**°C**	to	**6**	**°C**		**3**	**°C**

```
DHW  SETTINGS          4 ▲

 Max  Allowable
 DHW  Rate:         100%
```

Range:	**50**	%	to	**100**	%	**Default:**	**100**	%

Allows the installer to limit the maximum input rate for domestic hot water (DHW). Used when boiler is sized primarily for CH heating and the DHW load is small. See section 8.E.5.

Service Notification

```
SERVICE                    1 ▲
 Reset Notification
 Timer/Counters
 Press Select:Reset ▼
```

This screen allows the installer to reset the notification timers and counters. As the screen indicates, pressing the "Select" key will reset these values. After the "Select" key is pressed, the screen displays, "Done" in place of "Reset."

```
SERVICE                    2 ▲

 Notification on:
                        OFF ▼
```

Range: Off, HRS, CYCLES, DATE **Default:** Off
This screen allows the installer to choose the method of Service Notification or to disable Service Nofification. Reference section 8.F for more information.

```
SERVICE                    3 ▲

 Notification
 After:                 XHRS ▼
```

Range: 0 hrs to 8000 hrs **Default:** 4000 hrs
Settable in 100 hr increments
"SERVICE" will appear in the upper left of the main status screen after the number of hours displayed is exceeded.

```
SERVICE                    4 ▲

 Notification
 After:                 XCYC ▼
```

Range: 0 cyc to 50,000 cyc **Default:** 20,000 cyc
Settable in 1000 cyc increments
"SERVICE" will appear in the upper left of the main status screen after the number of cycles displayed is exceeded.

```
SERVICE                    5 ▲

 Notification on:
 DD MMM YYYY            OFF ▼
```

This screen allows the installer to set the date that the "SERVICE" notification will appear. Using the up/down arrow keys, the Day, Month, and Year can be selected. The date will appear as folows: 01 JAN 2008

System Test

```
SYSTEM TEST
→Off
 Low Power
 Ignition Power             ▼
```

```
SYSTEM TEST                 ▲
 Low Power
 Ignition Power
→Maximum Power
```

The System Test mode allows the user to force the control to operate at Low Power, Igntion Power, or Maximum Power for service and troubleshooting purposes. Reference section 8.G for more information on this function.

Cascade Settings

```
CASCADE
 Address Selection

 Boiler Address:            0▼
```

Range: 0 to 16 **Default:** 0
This screen allows the installer to choose the hierarchy of the boiler. The default value (0) indicates no cascade function is applied, (1) = Master and (2-16) = Slave

```
CASCADE                     ▲

 Start Delay Time:
                        2 min▼
```

Range: 1 min to 15 min **Default:** 2 min
This screen allows the installer to choose the delay time before the next boiler in the sequence is called for. The default for this value is 2 minutes.

```
CASCADE                     ▲

 Stop Delay Time:
                        2 min▼
```

Range: 1 min to 15 min **Default:** 2 min
This screen allows the installer to choose the delay time before the last boiler in the sequence is turned off. The default for this value is 2 minutes.

```
CASCADE                     ▲

Start Boiler Diff:
                          9°F▼
```

Range: 1 °F to 23 °F **Default:** 9 °F
This screen allows the installer to choose the temperature differential that starts another boiler in the sequence after the selected delay time.

```
CASCADE                     ▲

Stop Boiler Diff:
                         18°F▼
```

Range: 1 °F to 45 °F **Default:** 18 °F
This screen allows the installer to choose the temperature difference below which the last boiler in the sequence will stop after the selected delay time.

```
CASCADE                     ▲
 Calculated Setpoint
 Max offset up:
                         36°F▼
```

Range: 0 °F to 36 °F **Default:** 18 °F
This is an offset temperature applied to the setpoint of Dependent boilers that the control uses to adjust system response. Higher values increase system response.

Cascade Settings continued

```
CASCADE                ▲
 Calculated Setpoint
 Max offset down:
                 9 °F▼
```

Range: 0 °F to 36 °F **Default:** 9 °F
This is an offset temperature applied to the setpoint of Dependent boilers that the control uses to adjust system response. Higher values increase system response.

```
CASCADE                ▲
 Next boiler
 Start rate:
                 50%▼
```

Range: 40 % to 95 % **Default:** 50 %
This screen allows the installer to choose the input level at which the boilers that are running should be before the next boiler in the sequence will start.

```
CASCADE                ▲
 Next boiler
 Stop rate:
                  9%▼
```

Range: 5 % to 40 % **Default:** 9 %
This screen allows the installer to choose the input level at which the boilers that are running should be before the last boiler in the sequence will stop.

```
CASCADE                ▲

Rotation Interval
                 2 Days
```

Range: 0 Days to 30 Days **Default:** 5 Days
This screen allows the installer to choose the rotation cycle of the lead boiler. When this time limit is reached, the boiler with the lowest run hours will be chosen as lead. Choosing 0 disables rotation.

Default Settings

```
DEFAULT                1

 Factory Defaults
 Press Select:Reset     ▼
```

Pressing the "Select" key while viewing this screen allows the installer to reset all values to the factory default settings.

```
DEFAULT                2▲

 Save Site Defaults
 Press Select:Save      ▼
```

Pressing the "Select" key while viewing this screen allows the installer to save all current values as site default settings.

```
DEFAULT                3▲

 Site Defaults
 Press Select:Reset
```

Pressing the "Select" key while viewing this screen allows the installer to reset all values to the site default settings.

APPENDIX D. COMBUSTION TEST RECORD

Peerless® *PureFire*® Combustion Test Record

Contact:			
Company Name:			
Address:			
Phone Number:			
Fax Number:			
Email Address:			
Jobsite Data			
Job Name:			
Jobsite Address:			
Boiler Data			
Boiler Model:		Boiler Serial No.:	
Manufacture Date:		Startup Date:	
Gas Pressure			
Static Inlet Gas Pressure (in. w.c.) [With Boiler Off]:		Inlet Gas Pressure Drop After Boiler Startup (in. w.c.):	
High Fire Outlet Gas Pressure (in. w.c.):		Low Fire Outlet Gas Pressure (in. w.c.):	
Combustion Readings			
Flame Signal High Fire (μA):		Flame Signal Low Fire (μA):	
CO_2 High Fire (%):		CO_2 Low Fire (%):	
CO High Fire (ppm):		CO Low Fire (ppm):	
Fan Speed High Fire:		Fan Speed Low Fire:	
Excess Air High Fire (%):		Excess Air Low Fire (%):	
Exhaust Temperature High Fire (°F):		Exhaust Temperature Low Fire (°F):	
System Information			
Water Pressure:		Condensate Line Size:	
Vent Length (Total Equivalent Feet):		Vent Diameter:	

PEERLESS® PUREFIRE® REV 2

Gas Boilers

PF-50 PF-80 PF-110
PF-140 PF-210 PF-399

Installation, Operation & Maintenance Manual

TO THE INSTALLER:
This manual is the property of the owner and must be affixed near the boiler for future reference.

TO THE OWNER:
This boiler should be inspected annually by a Qualified Service Agency.

PeerlessBoilers.com

PB HEAT, LLC
131 S. CHURCH STREET • BALLY, PA 19503

WEB-2 (12/12)
©2012 PB Heat, LLC. All rights reserved.

PF8080 R10 (7/12-2M)
Printed in U.S.A.