ULTRA HIGH EFFICIENCY GAS WATER HEATER

(EFR160T120 Series Models)

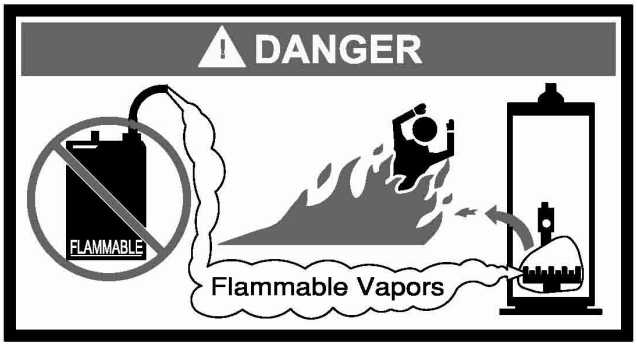

WARNING: If the information in these instructions is not followed exactly, a fire or explosion may result causing property damage, personal injury or death

- **Do not store or use gasoline or other flammable vapors and liquids in the vicinity of this or any other appliance.**
- **WHAT TO DO IF YOU SMELL GAS**
  - **Do not try to light any appliance.**
  - **Do not touch any electrical switch; do not use any phone in your building.**
  - **Immediately call your gas supplier from a neighbor's phone. Follow the gas supplier's instructions.**
  - **If you cannot reach your gas supplier, call the fire department.**
- **For your family's comfort, safety and convenience, it is recommended this water heater be installed and serviced by a plumbing professional.**

BRADFORD WHITE
WATER HEATERS

Ambler, PA 19002
Tech. Service (800) 334-3393
Service Parts (800) 538-2020
Warranty Service (800) 531-2111

INSTALLATION/OPERATING MANUAL

WITH TROUBLESHOOTING GUIDE

PLACE THESE INSTRUCTIONS ADJACENT TO WATER HEATER AND NOTIFY OWNER TO KEEP FOR FUTURE REFERENCE

238-48144-00D 1/12

SECTION I: IMPORTANT INFORMATION

READ CAREFULLY

This gas-fired water heater is design certified by CSA International under the American National Standard, Z21.10.3 (as indicated on the rating plate) and CAN/CGA 4.3-M (as indicated on the rating plate). These standards are available from CSA Standards Association, 5060 Spectrum Way Mississauga, Ontario L4W 5N6 CANADA.
This water heater must be installed in accordance with local codes. In the absence of local codes, it must be installed in compliance with the National Fuel Gas Code (ANSI Z223.1-Latest Edition), or in Canada CAN/CGA B149.1 Natural Gas Installation Code (Latest Edition) or CAN/CGA B149.2 Propane Installation Code (Latest Edition).

The following terms are used throughout this manual to bring attention to the presence of hazards at various risk levels, or to important information concerning product life.

⚠ DANGER

Indicates an imminently hazardous situation, which, if not avoided, will result in death, serious injury or substantial property damage.

⚠ CAUTION

Indicates potentially hazardous situation, which, if not avoided, may result in moderate or minor injury or property damage.

⚠ WARNING

Indicates a potentially hazardous situation, which, if not avoided, could result in death, serious injury or substantial property damage.

NOTICE

Indicates special instructions on installation, operation or maintenance, which are important but not related to personal injury hazards.

NOTICE

This water heater has a limited warranty. The warranty for this water heater is valid only if the water heater has been installed, maintained and operated in accordance with these instructions.

TABLE OF CONTENTS

I IMPORTANT INFORMATION 2
II SPECIFICATIONS 5
III GENERAL INFORMATION 6
IV INSTALLATION INSTRUCTIONS 9
V WATER CONNECTIONS 16
VI VENTING 18
VII GAS CONNECTIONS 35
VIII ELECTRICAL CONNECTIONS 37
IX OPERATING INSTRUCTIONS 38
X MAINTENANCE 46
XI DIAGNOSTIC AND TROUBLESHOOTING GUIDE 51
XII PARTS LIST 70

⚠ DANGER

DO NOT store or use gasoline or other flammable, combustible, or corrosive vapors and/or liquids in the vicinity of this or any other appliance.

DO NOT install any damaged venting system components. If damage is evident then please contact the supplier where the water heater was purchased or the manufacturer listed on the rating plate for replacement parts.

Use only vent terminals provided or factory authorized terminals for venting this water heater.

This water heater is equipped with an adjustable thermostat to control water temperature. Hot water temperatures required for automatic dishwasher and laundry use can cause scald burns resulting in serious personal injury and/or death. The temperature at which injury occurs varies with the person's age and the time of exposure. The slower response time of disabled persons increases the hazards to them. *NEVER* allow small children to use a hot water tap, or to draw their own bath water. *NEVER* leave a child or disabled person unattended in a bathtub or shower.

Failure to properly install the vent and air intake (if applicable) system could result in property damage, personal injury, or death.

⚠ WARNING

Improper installation, adjustments, alteration, service or maintenance can cause property damage, personal injury or loss of life. Failure to follow all instructions in the proper order can cause personal injury or death. Read and understand all instructions, including all those provided with the appliance before installing, starting-up, operating, maintaining or servicing this appliance. Keep this manual and literature in legible condition with this water heater for reference by owner and service technician.

This water heater requires regular maintenance and service to operate safely. Follow the instructions contained in this manual.

Installation, maintenance, and service must be performed only by a qualified, skilled and knowledgeable installer or service provider.

Installation is not complete unless a temperature and pressure relief valve is installed into the proper location at the top of this water heater.

It is the responsibility of the installing contractor to see that all controls are correctly installed and are properly operating when the installation is complete.

This water heater is suitable for installation on combustible flooring. Do not install water heater directly on carpeting.

DO NOT operate this water heater without first being certain it is filled with water.

DO NOT tamper with or alter the water heater and/or controls.

DO NOT operate water heater with jumpered or absent controls or safety devices.

DO NOT operate water heater if any external part has been under water. Immediately call a qualified service agency to inspect the appliance and to replace any part of the control system including gas controls, which has been under water.

DO NOT attempt to use this water heater with any gas other than the type listed on the rating plate. Do not attempt to convert this water heater for use with a gas other than the type for which it is equipped. Failure to use the proper gas can create an unsafe condition resulting in property damage, bodily injury, or death. Consult your local gas supplier or gas company if there are any questions.

DO NOT operate this water heater if the input rate exceeds the rate shown on the water heater rating plate.

This water heater contains very hot water under high pressure. Do not unscrew any pipe fittings nor attempt to disconnect any components of this water heater without positively assuring the water is cool and is not under pressure. Always wear protective clothing and equipment when installing, starting up or servicing this water heater to prevent scald injuries. Do not rely on the temperature gauges to determine the temperature. Do not touch any components unless they are cool.

This water heater must be properly vented and connected to an approved vent system in good condition. DO NOT operate water heater with the absence of an approved vent system. A clean and unobstructed vent system is necessary to allow noxious fumes that could cause injury or loss of life to vent safely and will contribute toward maintaining the water heater's efficiency.

⚠ WARNING

This water heater needs fresh air for safe operation and must be installed so there are provisions for adequate combustion and ventilation air. Insufficient air supply will cause a recirculation of combustion products resulting in contamination that may be hazardous to life. This will result in carboning or sooting of the combustion chamber, burners, and flue tubes and creates a risk of asphyxiation.

This water heater requires its own separate venting system. DO NOT connect the exhaust vent into an existing vent pipe or chimney.

Water heater materials of construction, products of combustion and the fuel contain carbon monoxide, nitrogen oxides, aldehydes and/or other toxic or harmful substances which can cause death or serious injury and which are known to the state of California to cause cancer, birth defects and other reproductive harm. Always use proper safety clothing, respirators and equipment when servicing or working nearby this water heater.

Flammable items, pressurized containers or any other potential fire hazardous articles must never be placed on or adjacent to the water heater. Open containers of flammable material should not be stored or used in the same room with this water heater.

Insulation blankets are not required for this water heater. This water heater meets or exceeds the ASHRAE/IES 90.1b (latest edition) standards with respect to insulation and standby loss requirements.

Hydrogen gas can be produced in an operating water heater that has not had water drawn from the tank for a long period of time (generally two weeks or more). Hydrogen gas is extremely flammable. To prevent the possibility of injury under these conditions, we recommend the hot water faucet to be open for several minutes at the kitchen sink before you use any electrical appliance, which is connect to the hot water system. If hydrogen is present, there will be unusual sounds such as air escaping through the pipes as hot water begins to flow. Do not smoke or have open flame near the faucet at the time it is open.

⚠ WARNING

Liquefied petroleum gases/propane gas is heavier than air and will remain at floor level if there is a leak. Basements, crawl spaces, closets and areas below ground level will serve as pockets for accumulation of leaking gas. Before lighting, smell all around the appliance area for gas. Be sure to smell next to the floor.

IF YOU SMELL GAS:

- DO NOT try to light any appliance.
- DO NOT touch any electric switch; do not use any telephone in your building.
- Immediately call your gas supplier from a telephone in another building. Follow the gas supplier's instructions.
- If you cannot reach your gas supplier, call the fire department.

DO NOT OPERATE THE APPLIANCE UNTIL THE LEAKAGE IS CORRECTED!

To comply with NSF requirements this water heater must be sealed to the floor with sealant, in a smooth and easily cleanable way.

SECTION II: SPECIFICATIONS

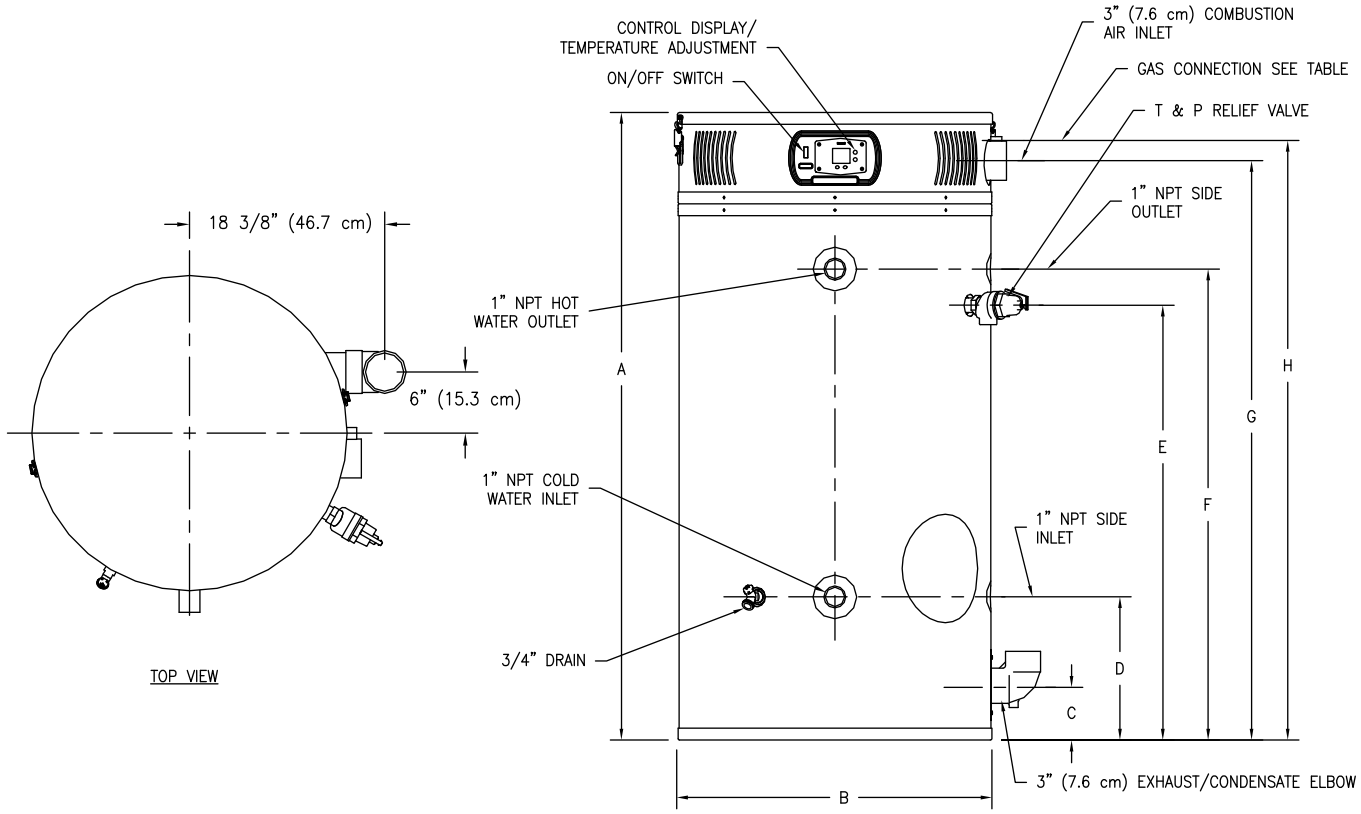

Figure 1. Dimensional Layout

			Recovery GPH At Degree Rise					DIMENSIONS (INCHES)												
Model No.	**Input Rate BTU/h**	**1st Hr. Del. Gal. At 100°F Rise**	40°F	100°F	140°F	**Stg. Cap. U.S. Gal.**	**Therm. Eff. %**	A Ht.	B Dia.	C Flr to Vent Outlet	D Flr to Inlet Wtr. Conn	E Flr to T&P Valve Conn	F Fl. to Outlet Wtr. Conn	G Fl. to Air Intake	H Fl. to Gas Conn.	Front Wtr. Conn. Dia.	Space Heating Conn. Dia.	Gas Conn. Dia.	Relief Valve Open.	Shpg. Wt. (LBS)
EFR-1-60T120	120,000	180	345	138	99	60	95.0	57	28 ¼	5	13	40	42 ½	52 ½	53 ½	1	1	¾	¾	570

			Recovery LPH At Degree Rise					DIMENSIONS (MILLIMETERS)												
Model No.	**Input Rate KW**	**1st Hr. Del. LPH at 56°C Rise**	22°C	56°C	78°C	**Stg. Cap. Liter**	**Therm. Eff. %**	A Ht.	B Dia.	C Flr to Vent Outlet	D Flr to Inlet Wtr. Conn	E Flr to T&P Valve Conn	F Fl. to Outlet Wtr. Conn	G Fl. to Air Intake	H Fl. to Gas Conn.	Front Wtr. Conn. Dia.	Space Heating Conn. Dia.	Gas Conn. Dia.	Relief Valve Open.	Shpg. Wt. (KG)
EFR-1-60T120	35.2	681	1306	522	375	227	95.0	1448	718	127	330	1016	1080	1334	1359	25	25	19	19	259

Table 1. Specifications

SECTION III: GENERAL INFORMATION

FEATURES

This water heater contains the following features:

MAIN POWER ON/OFF SWITCH – The front panel of this water heater has a lighted ON/OFF switch, which is illuminated when the main power is turned on to indicate power to the water heater.

COMBUSTION SYSTEM – This water heater is equipped with a self-compensating negative pressure pre-mix combustion system. As the blower operates, air is drawn in through the air intake and into a venturi, which pulls gas from the gas valve. The gas and air is then mixed in the combustion blower and sent through the transition tube into the burner. The Direct Spark Ignition System (DSI) then ignites the gas/air fuel mixture to produce flue products (combustion). The flame sensor signals the ignition control board (described below), that a flame is present.

HONEYWELL INTEGRATED CONTROL – Consists of a control board and a water heater display. An attractive digital water heater display is on the top front of the water heater for precisely setting and displaying the temperature setpoint and monitoring the status of the water heater. Pressing the temperature UP and DOWN buttons changes the temperature setpoint. The temperature format may be displayed in degrees F or *degrees C*. The water heater display will show diagnostic codes in the event the water heater needs servicing. The temperature readings of the tank sensor can be monitored in Service Mode. Also in Service Mode, the display can show up to 10 previous error codes to further aid in servicing the water heater.

The single control board has plug in wiring harnesses to reduce the chance of miswiring. The control board controls all ignition, temperature, and combustion blower functions. The control board controls the combustion blower, ignition timings, and gas valve to control the combustion system in order to maintain the desired tank temperature. The sequence of operation is described in detail in the Diagnostic Section at the back of this Installation and Operating Instruction Manual.

ADJUSTABLE THERMOSTAT – This water heater is equipped with an adjustable thermostat to control water temperature. Hot water temperatures required for automatic dishwasher and laundry use can cause scald burns resulting in serious personal injury and/or death.

The temperature may be adjusted from about 70°F *(21°C)* to about 180°F *(82°C)*. The thermostat was adjusted to 70°F *(21°C)* before the water heater was shipped from the factory. It is recommended that lower temperatures be used to avoid the risk of scalding. Refer to the “Warnings” and the section on SCALDING in “Section V: Water Connections”. It is further recommended, in all cases, that the water temperature be set for the lowest temperature, which satisfies your hot water requirements for the installation. This will also provide the most energy efficient operation of the water heater and minimizes scale formation.

Setting the water heater temperature at 120°F *(49°C)* will reduce the risk of scalds. Some states require setting lower temperatures for specific installations.

The top immersion well of the single sensor control also contains a redundant sensor for the high limit (energy cutoff). The high limit circuit interrupts the main burner gas flow should the water temperature exceed approximately 200°F *(93°C)*. Error code “65” will be shown on the water heater control display if the high limit temperature has been exceeded.

Should the high limit switch activate, it must be manually reset. This should only be done by a service technician after the cause of overheating has been corrected. Refer to the section on “Accessing Service Mode on the Display” in the Diagnostic section of this Installation and Instruction Manual.

Contact your qualified installing contractor, service provider or manufacturer listed on the rating plate if continued high limit operation occurs.

SERVICE PANEL – The service panel is located behind the service panel access cover, which is located by the exhaust elbow near the bottom of the water heater. This panel contains a pressure switch that monitors the pressure in the exhaust pipe in case the vent terminal becomes blocked. A collector high limit switch is used to monitor the ambient temperature between the first pass collector and the exhaust collector. This is a manually re-settable switch. If this switch continues to trip, please contact an authorized service agency.

LATCHES – The latches allow easy access for servicing the water heater from the top. Simply remove the two latches for servicing and re-latch upon completion. No tools are required to obtain access to the top of the water heater.

MIXING VALVE – This water heater is supplied with an ASSE approved mixing valve to reduce the potential for scald injury when thermostat settings over 120˚F *(49ºC)* are used for dishwashers or other appliances. The mixing valve reduces the discharge temperature by mixing cold and hot water in the branch supply lines. Refer to the instructions supplied with the mixing valve for installation procedures and device specifications. The mixing valve is located inside the control compartment.

⚠ SCALDING WARNING

ASSE APPROVED MIXING DEVICE MUST BE INSTALLED TO PROVIDE PROTECTION FROM SCALDING

This water heater can deliver scalding temperature water at any faucet in the system if installed without installing the supplied ASSE mixing device. By setting the thermostat on this water heater to obtain an increased water temperature without properly installing the supplied mixing device, you may create the potential for scald injury. To protect against injury, the supplied ASSE approved mixing device (a device to limit the temperature of water to protect against scald injury via mixing hot and cold water supply) must be properly installed in the water system. This valve will reduce point of discharge temperature in branch supply lines.

TEMPERATURE AND PRESSURE RELIEF VALVE –

⚠ WARNING

Keep clear of the combination temperature and pressure relief valve discharge line outlet. The discharge may be hot enough to cause scald injury. The water is under pressure and may splash.

For protection against excessive temperatures and pressure, install temperature and pressure protective equipment required by local codes, but not less than a combination temperature and pressure relief valve certified by a nationally recognized testing laboratory that maintains periodic inspection of production of listed equipment or materials as meeting the requirements of the Standard for *Relief Valves and Automatic Gas Shutoff Devices for Hot Water Supply Systems, ANSI Z21.22* and the Standard *CAN1-4.4 Temperature, Pressure, Temperature and Pressure Relief Valves and Vacuum Relief Valves*. The combination temperature and pressure relief valve must be marked with a maximum set pressure not to exceed the maximum working pressure of the water heater. The combination temperature and pressure relief valve rating must not be less than the hourly rating of the water heater

Install the combination temperature and pressure relief valve into the opening provided and marked for this purpose on the water heater.

Note: Some models may already be equipped or supplied with an installed combination temperature and pressure relief valve. Verify that the combination temperature and pressure relief valve complies with local codes. If the combination temperature and pressure relief valve does not comply with local codes, replace it with one that does. Follow the installation instructions above on this page.

Install a discharge line so that water discharged from the combination temperature and pressure relief valve will exit within 6 inches *(15.3 cm)* above, or any distance below the structural floor and cannot contact any live electrical part. The discharge line is to be installed to allow for complete drainage of both the combination temperature and pressure relief valve and the discharge line. The discharge opening must not be subjected to blockage or freezing. **DO NOT** thread, plug or cap the discharge line. It is recommended that a minimum clearance of 4 inches *(10.2 cm)* be provided on the side of the water heater for servicing and maintenance of the combination temperature and pressure relief valve.

Do not place a valve between the combination temperature and pressure relief valve and the tank!

CONDENSATE DRAIN – The water heater should either be raised several inches above the floor on a concrete slab or use a low profile condensate pump to allow free drainage of condensate from the elbow drain fitting. This water heater is a condensing type unit and requires a drain to be located in close proximity to allow the condensate to drain safely. The condensate drains from the unit at the exhaust elbow located near the bottom of the unit. The preferred connection to the drain fitting is to use a ¾ inch *(1.9 cm)* elbow sealed with silicone over the outside of the drain outlet and use ¾ inch *(1.9 cm)* for the drain trap and condensate line to a drain. Use a thick bead of silicone caulk over the outside of the drain outlet connection before assembling the elbow. This is preferred over using the threaded tap because the larger drain line will drain more freely and if too much force is applied to the plastic threads, the fitting may crack and cause a leak. Make sure the condensate drain line slopes down, away from the water heater at least ⅛ inch *(.3 cm)* per foot *(.3 m)* toward the drain. The condensate drain pipe must not be routed through an area subject to below freezing temperatures. The condensate build-up will block the exhaust outlet, which will cause improper operation. Refer to Figure 2 for the proper connection of an elbow to the drain outlet and a condensate trap.

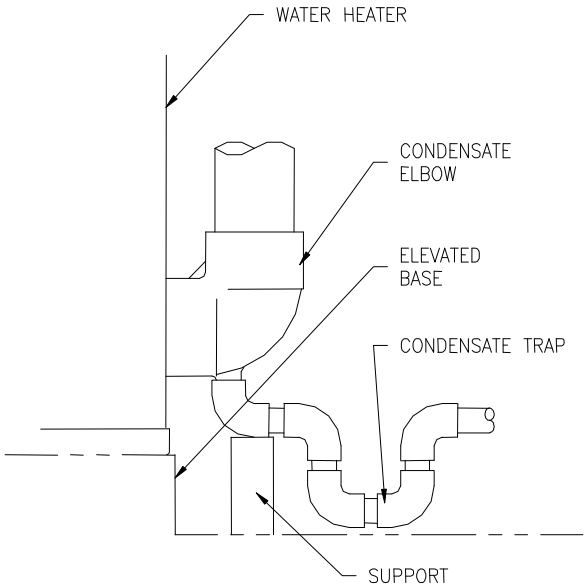

Figure 2. Condensate Elbow With Trap

CLEANOUT – All models are equipped with a cleanout opening to aid in removal of hard water deposits from the tank bottom. If this water heater operates under hard water conditions, the following should be performed at least every 3 months: Turn off water supply and drain the water heater. Remove the cleanout jacket cover and tank cover. When cleaning the tank, care must be taken to avoid trying to break deposits loose as this could damage the glass lining and shorten the life of the water heater. After cleaning, re-install the cleanout tank cover and jacket cover, and refill with water. Refer to the section, “Section X: Maintenance” in this Installation and Operating Instruction manual for the procedures for filling and draining the water heater.

SACRIFICIAL ANODES – Four sacrificial anode rods have been installed in the tank head to extend tank life. The anode rods should be inspected periodically for corrosion and replaced when necessary to prolong tank life. Water conditions in your area will influence the time interval for inspection and replacement of the anode rods. The use of a water softener may increase the speed of anode consumption. More frequent inspection of the anodes is needed when using softened (or phosphate treated) water. Contact the installing contractor, or service provider that installed the water heater or the manufacturer listed on the rating plate for anode replacement information.

SECTION IV: INSTALLATION INSTRUCTIONS

⚠ WARNING

INSTALLATION OF THIS WATER HEATER REQUIRES ABILITY EQUIVALENT TO THAT OF A LICENSED TRADESMAN IN THE FIELD. PLUMBING, AIR SUPPLY, VENTING, GAS SUPPLY AND ELECTRICAL WORK ARE REQUIRED.

DO NOT ATTEMPT TO LIGHT ANY GAS APPLIANCE IF YOU ARE NOT CERTAIN OF THE FOLLOWING:

- Liquefied petroleum gases/propane gas and natural gas have an odorant added by the gas supplier that aids in detection of the gas.
- Most people recognize this odor as a “sulfur” or “rotten egg” smell.
- Other conditions, such as “odorant fade” can cause the odorant to diminish in intensity, or “fade”, and not be as readily detectable.
- If you have a diminished sense of smell, or are in any way unsure of the presence of gas, immediately contact your gas supplier from a telephone in another building.
- Gas detectors are available. Contact your gas supplier or plumbing professional for more information.

Liquefied petroleum gases/propane gas is heavier than air and will remain at floor level if there is a leak. Basements, crawl spaces, closets and areas below ground level will serve as pockets for accumulation of leaking gas. Before lighting, smell all around the appliance area for gas. Be sure to smell next to the floor.

IF YOU SMELL GAS:

- Do not try to light any appliance.
- Do not touch any electric switch; do not use any telephone in your building.
- Immediately call your gas supplier from a telephone in another building. Follow the gas supplier’s instructions.
- If you cannot reach your gas supplier, call the fire department.

DO NOT OPERATE THE APPLIANCE UNTIL THE LEAKAGE IS CORRECTED!

⚠ WARNING

This water heater must be located in an area where leakage of the tank, water line connections, or the combination temperature and pressure relief valve will not result in damage to the area adjacent to the water heater or to lower floors of the structure. When such locations cannot be avoided, a suitable drain pan must be installed under the water heater. The drain pan depth must be suitable for draining and collecting water, and have a minimum length and width of at least 4 inches *(10.2 cm)* measured from the jacket of the water heater. The drain pan, as described above, can be purchased from your plumbing professional. The drain pan must be piped to an adequate drain. The piping must be at least ¾ inch *(1.9 cm)* in diameter and pitched for proper drainage.

Sacrificial anode rods have been installed in the tank head of the water heater to extend tank life. The removal of these anodes for any reason will nullify the warranty. In areas where water is unusually active, an odor may occur at the hot water faucet due to a reaction between the sacrificial anode and the impurities in the water. If this should happen, alternative anodes may be purchased from the supplier that installed this water heater. This will minimize the odor while protecting the tank. Additionally, the water heater should be flushed with appropriate dissolvers to eliminate any bacteria.

This water heater MUST be installed indoors out of the wind and weather.

This water heater MUST NOT be installed in any location where gasoline or flammable vapors are likely to be present, unless the installation is such to eliminate the probable ignition of gasoline or flammable vapors.

Water heaters in residential garages must be installed so that all burner(s) and ignition device(s) are located not less than 18 inches *(45.7 cm)* above the floor and be located, or protected, to avoid physical damage. For other installations, refer to local codes. In the absence of local codes, the water heater must be installed in compliance with the National Fuel Gas Code, (ANSI Z223.1-Latest Edition) or CAN/CGA B149.1 Natural Gas Installation Code (Latest Edition) or CAN/CGA B149.2 Propane Installation Code (Latest Edition).

UNPACKING

INSPECT SHIPMENT carefully for any signs of damage.

1. All equipment is carefully manufactured, inspected and packed.
2. Any claims for damage or shortage in shipment must be filed immediately with Bradford White Corporation and noted on the Bill of Lading.
3. Remove all venting components and mixing valve from the combustion assembly compartment by removing the latches.

NOTICE
The mixing valve, vent terminals and the condensate elbow that are supplied with this water heater are stored at the top in the Combustion Assembly Compartment. To access these parts, unlatch the top lid. Be sure to replace the top and relatch.

LOCATE WATER HEATER in front of final position before removing crate.

1. LOCATE so that venting connections will be short and direct.
2. THIS WATER HEATER IS SUITABLE FOR INSTALLATION ON A COMBUSTIBLE FLOOR. Do not install this water heater directly on carpeting. If the water heater is to be installed on carpeting, it must be installed on top of a metal or wood panel extending beyond the full width and depth of the appliance by at least three 3 inches *(7.6 cm)* in any direction or, if the appliance is to be installed in an alcove or closet, the entire floor must be covered by the panel.
3. FOR BASEMENT INSTALLATION, provide a solid level elevated base such as concrete or other suitable pad to raise the water heater at least 3 inches *(7.6 cm)* to provide a slope of ⅛ inch *(.3 cm)* to ¼ inch *(.6 cm)* per foot *(.3 m)* for the condensate line to a suitable drain.
4. Minimum clearance to combustible material is 0 inches for the Top, Sides, and Rear of this water heater. However, it is recommended that **at least 18 inches *(45.7 cm)* from the Top, 24 inches *(61 cm)* from the Front, 4 inches *(10.2 cm)* for the Left Side and Rear, and 12 inches *(30.5 cm)* from the Right Side Exhaust Elbow of the water heater be provided for servicing.** Clearance for servicing may be reduced down to minimum clearance to combustible material, but service time and effort may be greatly increased.

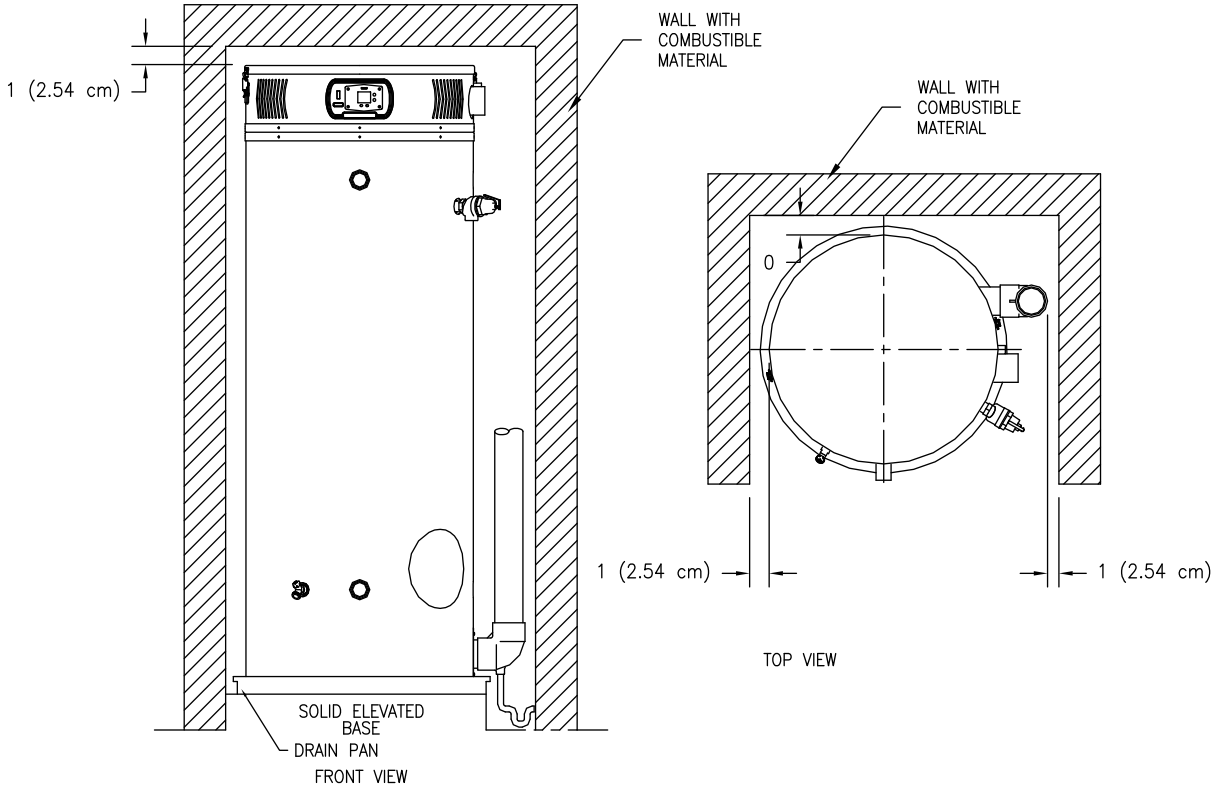

Figure 3a. Minimum Clearance To Combustible Material

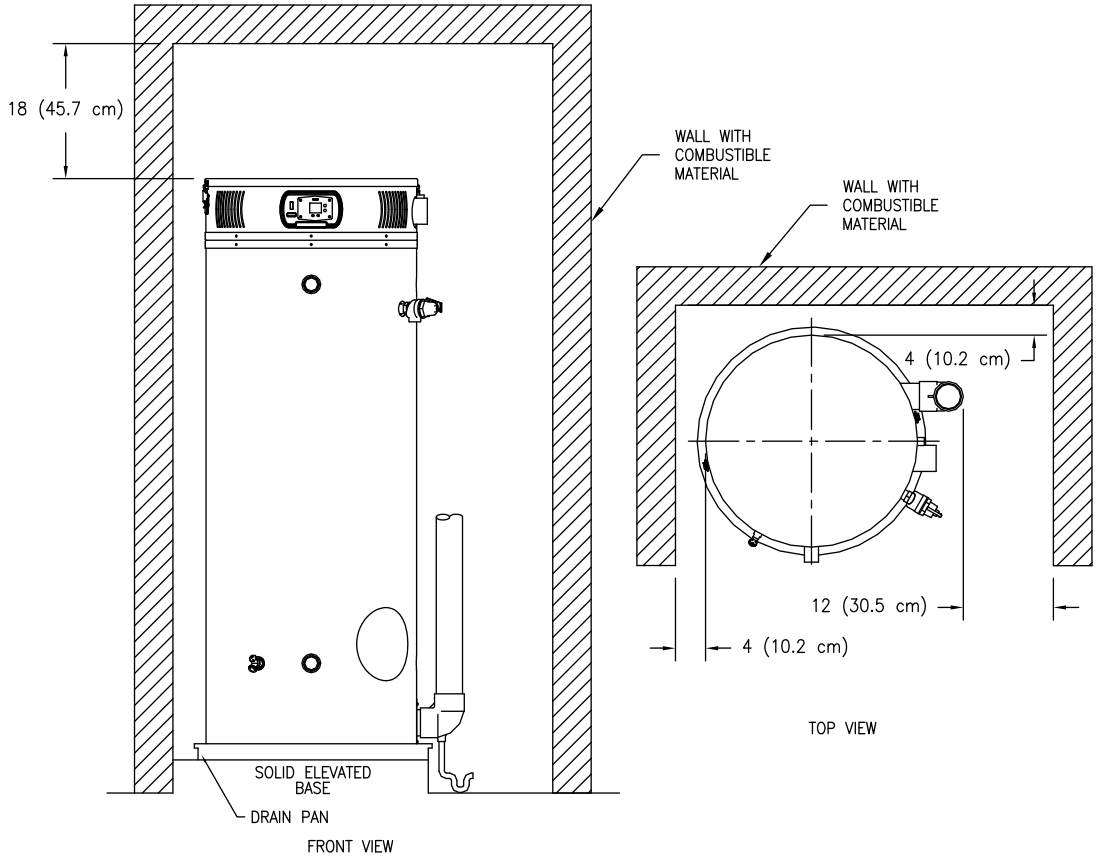

Figure 3b. Recommended Minimum Clearances For Service Access

REMOVE CRATE

1. Remove all banding and pry off crate sides carefully so as not to damage the water heater.
2. Carefully roll/lift the water heater from the crate base.

⚠ CAUTION
Do not drop water heater. Do not bump water heater jacket against floor.
Do not bump exhaust vent pipe against crate or other objects. This will damage the water heater and cause it to be inoperable or create nuisance problems.

MOVE WATER HEATER TO PERMANENT POSITION by sliding or walking. Place drain pan underneath water heater

INSTALL TEMPERATURE AND PRESSURE RELIEF VALVE (if not already installed).

⚠ WARNING
Temperature and pressure relief valve discharge piping must be piped near floor to eliminate potential of severe burns. Do not pipe in any area where freezing could occur. Do not install any shut-off valves, plugs or caps to the temperature and pressure relief valve or piping.

⚠ SCALDING WARNING
ASSE APPROVED MIXING DEVICE MUST BE INSTALLED TO PROVIDE PROTECTION FROM SCALDING
This water heater can deliver scalding temperature water at any faucet in the system if installed without installing the supplied ASSE mixing device. By setting the thermostat on this water heater to obtain an increased water temperature without properly installing the supplied mixing device, you may create the potential for scald injury. To protect against injury, the supplied ASSE approved mixing device (a device to limit the temperature of water to protect against scald injury via mixing hot and cold water supply) must be properly installed in the water system. This valve will reduce point of discharge temperature in branch supply lines.

⚠ CAUTION
If the building cold water supply has a back-flow preventer, check valve or water meter with check valve, provisions for thermal expansion of water in the hot water system must be provided.

LOCATION

KEEP APPLIANCE AREA CLEAR AND FREE OF COMBUSTIBLE MATERIALS, GASOLINE AND OTHER FLAMMABLE VAPORS AND LIQUIDS.

This water heater must be located in an area where the general public does not have access to set temperatures.

AIR REQUIREMENTS

1. Do not obstruct the flow of combustion and ventilating air.
2. For safe operation, adequate air is needed for combustion and ventilation. Sooting may result in serious damage to the water heater and risk of fire or explosion. It can also create a risk of asphyxiation. Such a condition often will result in a yellow, luminous burner flame, causing carboning or sooting of the combustion chamber, burner and flue tubes.

MECHANICAL EXHAUSTING OF ROOM AIR

1. Where an exhaust fan is installed in the same room with this water heater and combustion air is drawn from inside the room, sufficient openings for air must be provided in the walls. UNDERSIZED OPENINGS WILL CAUSE AIR TO BE DRAWN INTO THE ROOM THROUGH THE WATER HEATER'S VENTING SYSTEM, CAUSING POOR COMBUSTION THAT MAY BE HAZARDOUS TO LIFE. SOOTING MAY RESULT IN SERIOUS DAMAGE TO THE WATER HEATER AND RISK OF FIRE OR EXPLOSION, WHICH CAN ALSO CREATE A RISK OF ASPHYXIATION. Refer to local codes and /or National Fuel Gas Code for proper air opening sizing.

UNCONFINED SPACE

1. In buildings of conventional frame, brick or stone construction, unconfined spaces may provide adequate air for combustion and ventilation.
2. If the unconfined space is within a building of tight construction (buildings using the following construction: weather stripping, heavy insulation, caulking, vapor barrier, etc.), air for combustion and ventilation must be obtained from outdoors. This may be accomplished by piping air directly to the water heater from outside or providing opening or ducts in the wall. The installation instructions for confined spaces in tightly constructed buildings must be followed to ensure adequate air supply.

CONFINED SPACE

1. When drawing combustion air from inside a conventionally constructed building to a confined space, such a space shall be provided with two permanent openings.
   - The top opening is to be located within 12 inches *(30.5 cm)* of the enclosure top and the bottom opening within 12 inches *(30.5 cm)* of the enclosure bottom.
   - Each opening shall have a free area of at least 1 inch² *(6.5 cm²)* per 1000 Btu/h *(.3 kw)* of the total input of all appliances in the enclosure, but not less than 100 inches² *(645.2 cm²)*.
2. If the confined space is within a building of tight construction, air for combustion and ventilation must be obtained from outdoors. This may be accomplished by piping air directly to the water heater from outside or providing opening or ducts in the wall. When directly communicating with the outdoors through vertical ducts, two permanent openings, located in the above manner, shall be provided.
   - Each opening shall have a free area of not less than 1 inch² *(6.5 cm²)* per 4000 Btu/h *(1.2 kw)* of the total input of all appliances in the enclosure.
   - If horizontal ducts are used, each opening shall have a free area of not less than 1 inch² *(6.5 cm²)* per 2000 Btu/h *(.6 kw)* of the total input of all appliances in the enclosure.
3. If the water heater is installed as a direct vent (outside air piped directly to the water heater), then additional opening, other than the opening for the air intake, are not required. However, adequate ventilation air must be provided in all cases to prevent increased room temperature.

CHEMICAL VAPOR CORROSION

Corrosion of the flue ways and vent system will occur if air for combustion contains certain chemical vapors. Such corrosion may result in poor combustion and create a risk of asphyxiation, as well as reducing the life of the water heater. Spray can propellants, cleaning solvents, refrigerator and air conditioning refrigerants, swimming pool chemicals, calcium and sodium chloride, waxes and process chemicals are corrosive. Products of this sort should not be stored near the water heater or outside by the air intake (if applicable).

TYPICAL INSTALLATION ILLUSTRATION

⚠ CAUTION

If the building cold water supply has a back-flow preventer, check valve, or water meter with check valve, provisions for thermal expansion of water in the hot water system must be provided.

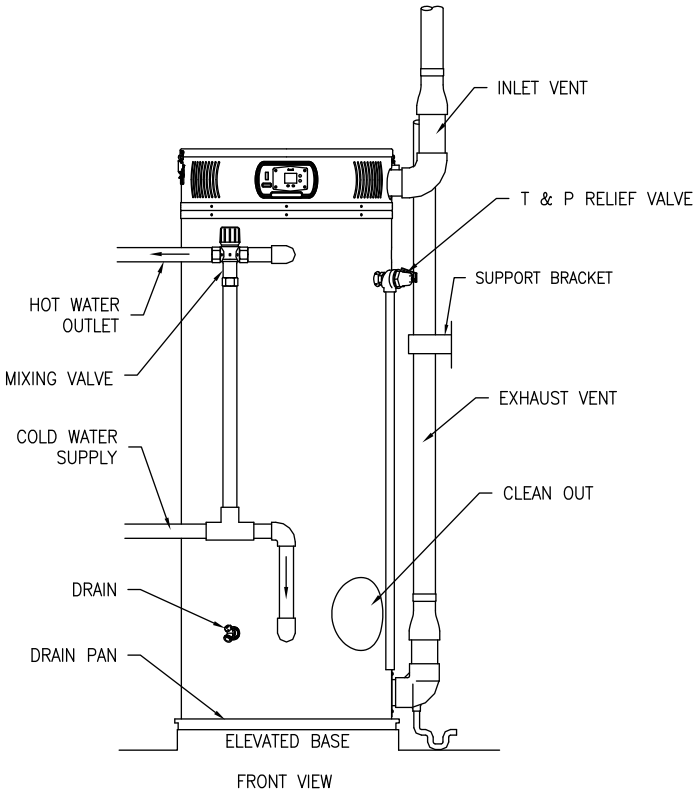

Figure 4. Typical Front Inlet Connection

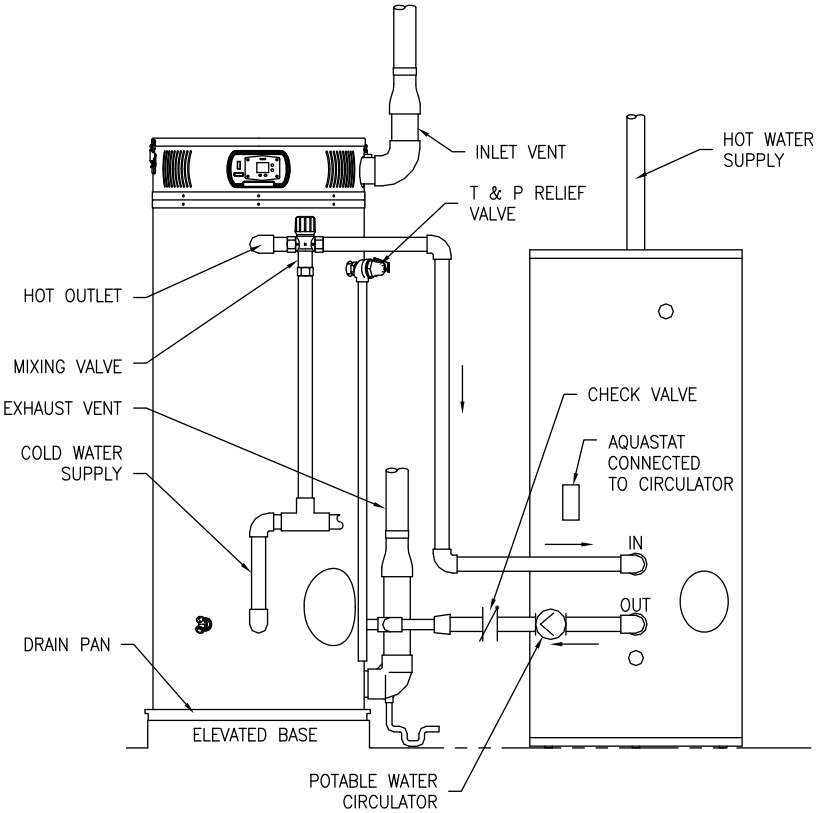

Figure 5. Typical Front Inlet Connect with Storage Heater

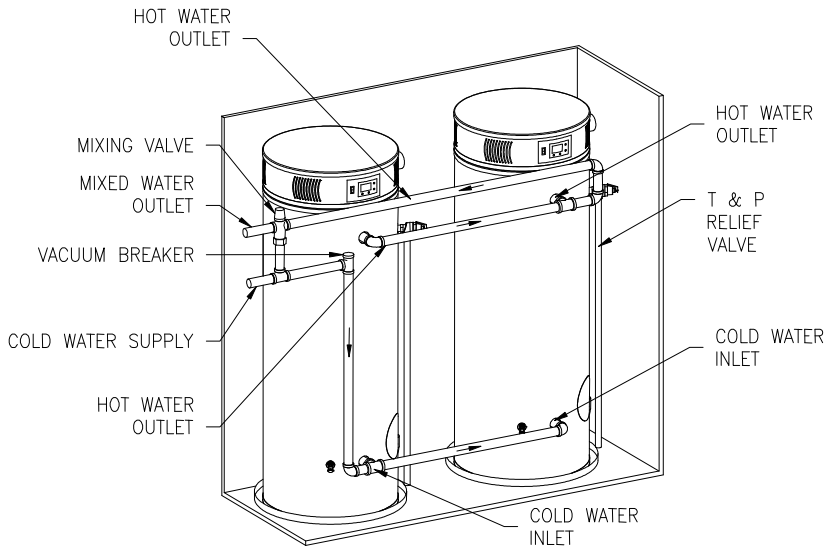

Figure 6. Typical Two Water Heater Connection

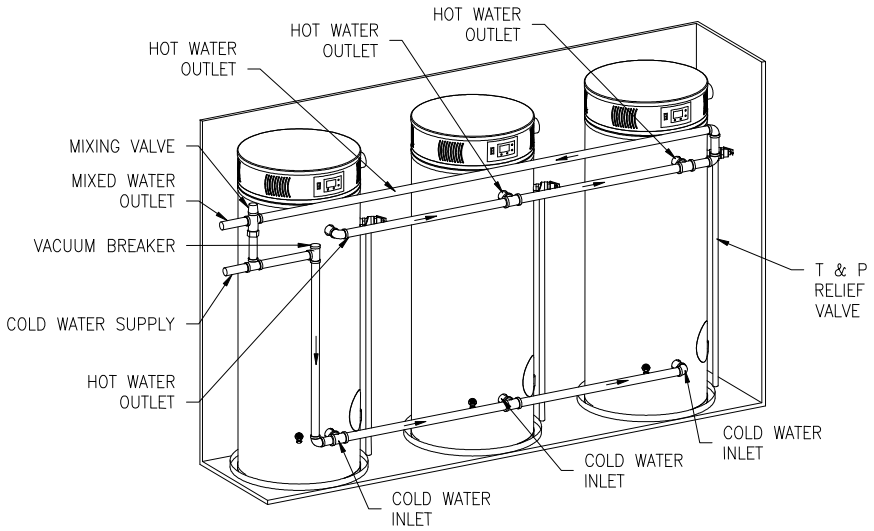

Figure 7. Typical Three Water Heater Connection

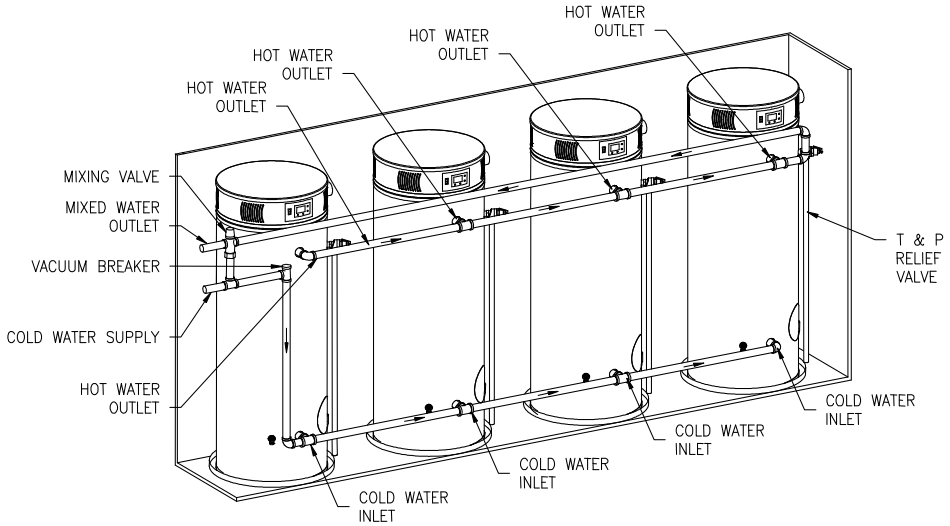

Figure 8. Typical Four Water Heater Connection

SECTION V: WATER CONNECTIONS

⚠ WARNING

Failure to install and maintain a new, listed temperature and pressure relief valve will release the manufacturer from any claim, which might result from excessive temperature and pressures.

Hydrogen gas can be produced in an operating water heater that has not had water drawn from the tank for a long period of time (generally two weeks or more). HYDROGEN GAS IS EXTREMELY FLAMMABLE. To prevent the possibility of injury under these conditions, we recommend the hot water faucet to be open for several minutes at the kitchen sink before you use any electrical appliance, which is connected to the hot water system. If hydrogen is present, there will be an unusual sound such as air escaping through the pipes as hot water begins to flow. Do not smoke or have open flame near the faucet at the time it is open.

Keep clear of the combination temperature and pressure relief valve discharge line outlet. The discharge may be hot enough to cause scald injury. The water is under pressure and may splash.

Setting the water temperature to the maximum set point can result in scalding hot water delivered to the faucets. It is highly recommended that the maximum setpoint be adjusted to the lowest temperature possible for the needs of the installation. See following section to change the maximum setpoint limit (max setpoint). Make sure the water heater control display is not in a public area that can result in the temperature settings being improperly adjusted. See previous warning on scalds and an ASSE approved mixing valve.

⚠ CAUTION

If sweat fittings are to be used, DO NOT apply heat to the nipples in front or side of the water heater. Sweat the tubing to the adapter before fitting the adapter to the water connections. It is imperative that heat is not applied to the nipples containing a plastic liner.

This water heater must not be operated without installing the mixing valve included in the box shipped with the water heater located in the control compartment. Refer to the instructions supplied with the mixing valve for proper installation and settings.

INSTRUCTIONS FOR CONNECTIONS

1. BEFORE PROCEEDING WITH THE INSTALLATION, CLOSE THE MAIN WATER SUPPLY VALVE. After shutting off the main water supply, open a faucet to relieve the water line pressure to prevent any water from leaking out of the pipes while making the water connections to the water heater. The COLD water inlet and HOT water outlet are identified on the water heater. Make the proper plumbing connections between the water heater and the plumbing system to the house. Install a shut-off valve in the cold water supply line.
2. If this water heater is installed in a closed water supply system, such as the one having a back-flow preventer in the cold water supply, provisions must be made to control thermal expansion. **DO NOT** operate this water heater in a closed system without provisions for controlling thermal expansion. Warranties do not cover damages from thermal expansion such as pressure bulges and/or deformities. Your water supplier or local plumbing inspector should be contacted on how to control this situation.
3. After installation of the water lines, open the main water supply valve and fill the water heater. While the water heater is filling, open several hot water faucets to allow air to escape from the water system. When a steady stream of water flows through the faucets, close them and check all water connections for possible leaks.
4. Never operate the water heater without first being certain it is filled with water.

SCALDING

This water heater can deliver scalding temperature water at any faucet in the system. Be careful whenever using hot water to avoid scalding injury. Certain appliances such as dishwashers and automatic clothes washers may require increased temperature water.

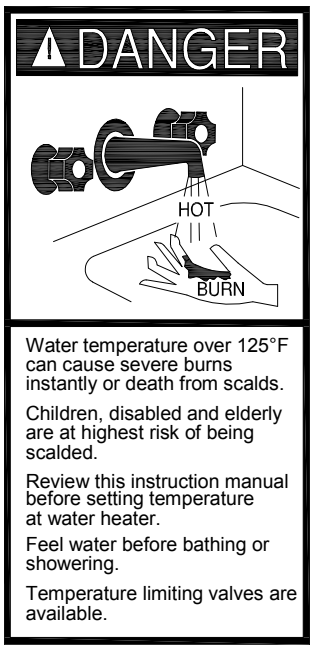

Figure 9. Scald Warning

By setting the thermostat on this water heater to obtain the increased temperature water required by these appliances, you might create the potential for scald injury. To protect against injury, you must install the ASSE approved mixing valve supplied with the water heater in the water system. This valve will reduce point of discharge temperature by mixing cold and hot water in branch supply lines. Follow the instructions supplied with the mixing valve for proper installation and adjustment. The following chart details the relationship of water temperature and time with regard to scald injury and may be used as a guide in determining the safest water temperature for your applications.

Approximate Time/Temperature Scald Chart

APPROXIMATE TIME/TEMPERATURE RELATIONSHIPS IN SCALDS	
120°F *(49°C)*	More than 5 minutes
125°F *(52°C)*	1½ to 2 minutes
130°F *(54°C)*	About 30 seconds
135°F *(57°C)*	About 10 seconds
140°F *(60°C)*	Less than 5 seconds
145°F *(63°C)*	Less than 3 seconds
150°F *(66°C)*	About 1½ seconds
155°F *(68°C)*	About 1 second

Table 2.

ALTERNATE SPACE HEATING WATER CONNECTIONS

⚠ DANGER

Toxic chemicals, such as those used for boiler treatment, **must not** be introduced into potable water used for space heating.

This water heater **must not** be connected to an existing heating system or component(s) previously used with a non-potable water heating appliance.

All piping components connected to this water heater for space heating applications must be suitable for use with potable water.

⚠ WARNING

When the system requires water for space heating at temperatures higher than required for other means, the supplied ASSE approved mixing valve must be installed to temper the water for those uses in order to reduce the scald hazard potential.

Failure to properly pipe this water heater may result in improper operation and damage to the water heater or structure.

Oxygen contamination of this water heater will cause corrosion of iron and steel components, and can lead to water heater failure.

Connect the system supply and return piping to the water heater.

Refer to Figure 10 and Figure 11 for installation examples. Maintain a minimum ½ inch *(1.3 cm)* clearance from hot water piping to combustible materials.

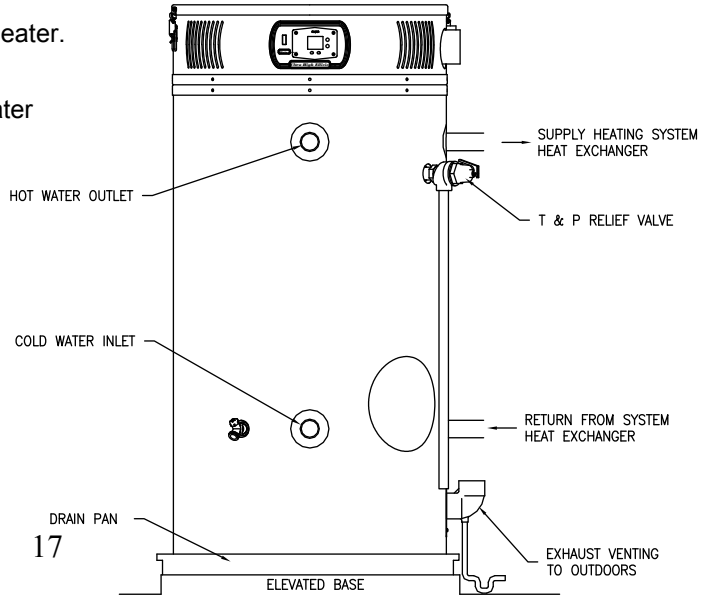

Figure 10. Alternate Space Heating Connections

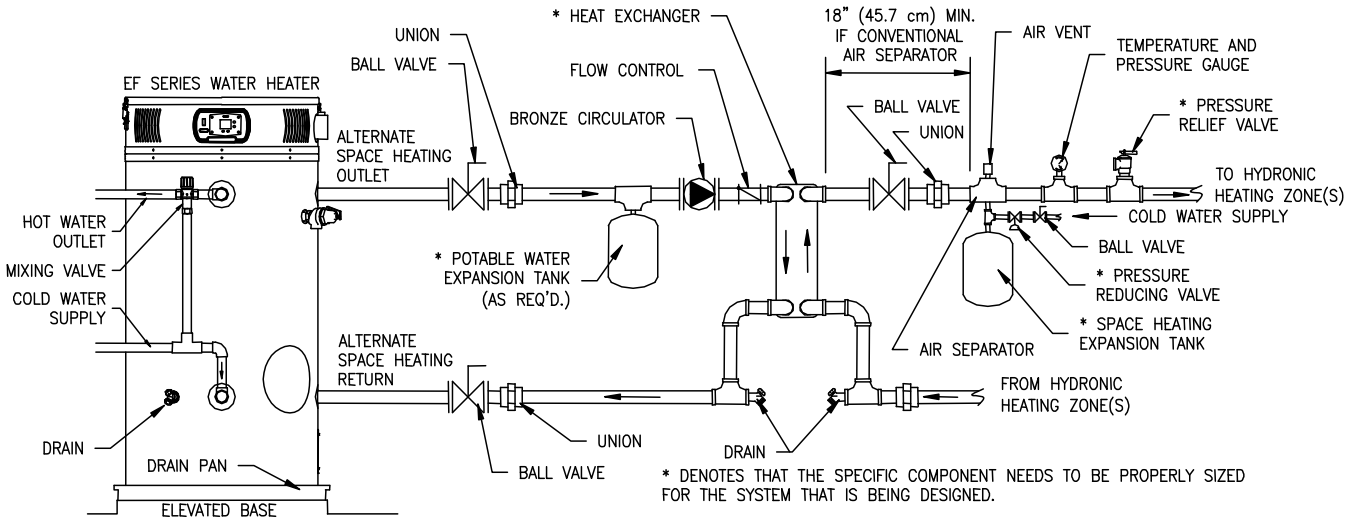

Figure 11. Typical Plumbing Schematic for Zoned Heating

SECTION VI: VENTING

⚠ WARNING

The vent system must be properly installed. Failure to properly install the vent system could result in property damage, personal injury, or death.

DO NOT install damaged venting system components. If damage is evident then please contact the supplier where the water heater was purchased or the manufacturer listed on the rating plate for replacement parts.

Use only the vent terminals provided or factory authorized terminals for venting this water heater.

The water heater requires its own separate venting system. Do not connect the exhaust vent into an existing vent pipe or chimney.

All of the exhaust venting connections must be leak checked with a soap solution upon initial start up of the water heater. Any leaks must be repaired before continuing operation of the water heater.

Do not terminate the venting where noise from the exhaust or intake will be objectionable. This includes locations close to or across from windows and doors. Avoid anchoring the vent and intake pipes directly to framed walls, floors, or ceilings unless rubber isolation pipe hangers are used. This prevents any vibrations from being transmitted into the living spaces.

Do not exceed the venting distances or the number of elbows listed in this manual. Exceeding the maximum venting distances may cause the water heater to malfunction or cause an unsafe condition.

DO NOT operate this water heater until the venting installation is complete and the piping completed. Failure to complete installation before operation can result in property damage, personal injury, or death.

⚠ WARNING

Risk of carbon monoxide poisoning or fire due to joint separation or pipe breakage.

This water heater must be properly vented and connected to an approved vent system in good condition. **DO NOT** operate water heater with the absence of an approved vent system. A clean and unobstructed vent system is necessary to allow noxious fumes that could cause injury or loss of life to vent safely and will contribute toward maintaining the water heater's efficiency. The acceptance of the venting system is dependent upon full compliance with these installation instructions.

Venting system **must not** pass through rated fire separations.

The venting system must be free to expand and contract. This venting system **must be** supported in accordance with these instructions.

NOTICE

Centrotherm Innoflue Single Wall Polypropylene venting systems are approved for use in the water heaters covered in this instruction manual. The Centrotherm venting system components are ULC S636 approved and listed by a recognized agency and may be installed in the U.S. and Canada. Complete instructions for the Centrotherm venting system (part# 238-49754-00) can be found on the Bradford White website, bradfordwhite.com or by calling the Technical Service Department at:800-334-3393.

⚠ WARNING

The Centrotherm Venting System Instruction Supplement (P/n: 238-49754-00) must be carefully read and followed by a qualified installer. Failure to properly install the vent system may result in property damage, personal injury, or death.

NOTICE

For installations in Canada, field supplied vent piping must comply with CAN/CGA B149.1 (latest edition) and be certified to the Standard For Type BH, Class II, 65°C, Gas Venting Systems, ULC S636. Components of this listed system shall not be interchanged with other vent systems or unlisted pipe/fittings. All components and specified primers and cements of the certified vent system must be from a single system manufacturer and not intermixed with other system manufacturer's vent system parts. The supplied vent connector and vent termination are certified under ULC S636 and are also certified as part of the water heater. Refer to the following tables for approved venting materials, primers, and cements. All approved primers and cements are to be used within their marked time limitations.

Approved Venting Materials

For installations in the US only	For installations in CANADA
• PVC (ASTM D-2241 Schedule 40, ASTM D-1785; or Cellular Core Schedule 40 DWV, ASTM F-891) • CPVC (ASTM F-411 Schedule 40) • ABS (ASTM D-2235) • All fittings (other than the components supplied with the water heater) should be equivalent to: PVC-DWV (ASTM-F-2665), CPVC (ASTM F-438), or ABS (ASTM D-266/3311)	• ULC S636 approved CAN-COM VENTING SYSTEM schedule 40 PVC for flue gas venting rated Class II, 65°C (components provided with water heater) • IPEX ULC S636 approved schedule 40 PVC (all other vent pipe/ fittings)

Approved Primers and Cements

For installations in the US only	For installations in CANADA
• PVC and CPVC Primer (ASTM F-656) • PVC and CPVC Cement (ASTM D-2564) • ABS Primer and Cement (ASTM D-2235)	• IPEX ULC S636 approved PVC Primer and Cement for flue gas venting rated Class II, 65°C

⚠ CAUTION

Check to make sure flue gases **do not** recirculate into the air intake terminal when using direct venting. If the water heater is having service issues, flue recirculation may be a contributing factor. Even when the minimum vent terminal separation distances are followed, recirculation may still occur depending upon the location outside the building, the distance from other buildings, proximity to corners, weather conditions, wind patterns, and snow depth. Periodically check to make sure that flue recirculation is not occurring. Signs of flue gas recirculation include frosted or frozen intake terminals, condensate in the intake terminal and venting system, oxidation or white chalk material on the flame sensor or igniter shield. Correction to flue recirculation may involve angling the intake away from the exhaust terminal, increasing the distance between them, relocating the air intake to another side of the building, or using inside air for combustion. Check to be sure the intake and exhaust terminals are not obstructed, especially during periods of below freezing weather.

All intake and exhaust venting components **must** have the same diameter size. **Do not** use a different size on the intake and exhaust venting. For 3 inch *(7.6 cm)* and 4 inch *(10.2 cm)* venting, use the supplied 2 inch *(5.1 cm)* vent terminals.

Be sure the condensate runs freely to a drain and does not accumulate inside the water heater. In cold climates, precautions may need to be taken to insure that the condensate drain does not freeze. Make sure the condensate trap or drain loop is installed to prevent flue gases from being discharged into the room. Refer to the Venting section of the Installation and Operating Instructions Manual for complete instructions on venting and condensate drainage.

High levels of dust and debris such as road and construction dust, insects, and tree pollen may clog the burner resulting in poor performance and damage to the water heater. Avoid air intake locations where debris can be created such as exhaust ventilation hoods, gravel parking lots, and near outdoor spotlights that attract bugs. For these installations, an air intake filter kit, part number 239-47330-00A, is available as an accessory service part from the installer of this water heater. The air intake filter kit is not designed to filter out airborne contaminants or chemicals that may damage the water heater.

⚠ CAUTION

The vent shall terminate a minimum of 12 inches *(30.5 cm)* above expected snowfall level to prevent blockage of vent termination.

The horizontal centerline of the exhaust vent terminal (if applicable) **must not** be located lower than the horizontal centerline of the air intake terminal if vented through the same wall.

A service drain loop must be installed in the drain tubing to serve as a condensate trap to prevent flue gases from escaping into the room.

DO NOT position the air intake above the exhaust terminal.

NEVER locate the air intake where exhaust gases can be introduced.

NOTICE

Before beginning installation of any vent pipe, read the vent pipe manufacturer's installation instructions.

Do not install the water heater in any location where the ambient temperature may fall below freezing. Water heater must be protected from freezing downdrafts during shutdown periods.

Provide protection of the building materials from degradation by flue gases from the exhaust vent terminal.

VENTING

The venting instructions must be followed to avoid restricted combustion or recirculation of flue gases. Such conditions cause sooting or risks of fire and asphyxiation.

This water heater can be installed as either a direct vent system or power vent (air from inside) system. If it is installed as a direct vent system, then the air intake and the exhaust vent are piped to the outside. If a power vented system is used, then air is drawn from inside and only the exhaust is piped to the outside. Determine which system is best for your application and install as described in the following sections.

DIRECT VENT INSTALLATION

Venting may be run horizontally through an outside wall or vertically through a roof through using either 2 inch *(5.1 cm)*, 3 inch *(7.6 cm),* or 4 inch *(10.2 cm)* diameter pipe. This water heater is supplied with a screened intake and exhaust elbow referred to as the air intake terminal and the exhaust vent terminal.

NOTICE

If 4 inch *(10.2 cm)* pipe is used, then a use a 4 inch *(10.2 cm)* to 2 inch *(7.6 cm)* reducer fitting before exiting the wall or roof to use the supplied screened intake and exhaust terminals.
If 3 inch *(5.1 cm)* pipe is used, then use a 3 inch *(5.1 cm)* to 2 inch *(7.6 cm)* reducer fitting before exiting the wall or roof to use the supplied screened intake and exhaust terminals.

Direct Vent Terminal Location

Plan the vent system layout so that proper clearances are maintained from plumbing and wiring. Before the vent is installed, determine the vent pipe termination location as shown in Figure 12.

NOTICE

The air intake and exhaust terminals may be located on separate outside walls or one terminal may exit the roof while the other is through the wall. The total combined equivalent vent length must be within the limits specified in the venting tables and the intake length cannot exceed the exhaust by more than 30 feet *(9 m)*. The minimum recommended vent separation distance between the intake and exhaust terminals is 36 inches *(91.4 cm)*. Local conditions may require a need for greater vent separation distances.

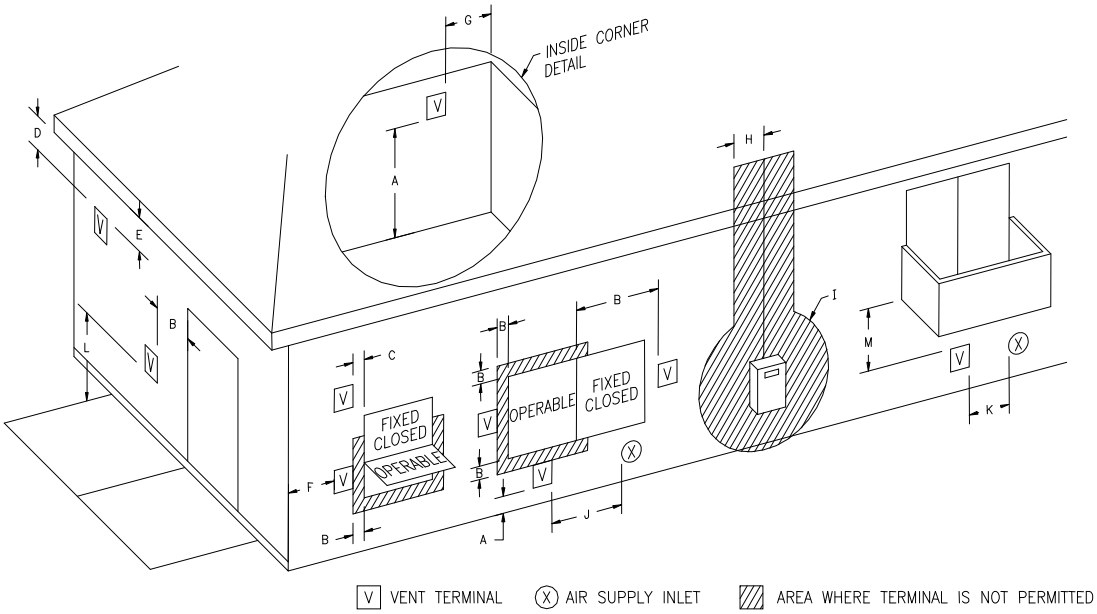

Figure 12a. Vent Terminal Clearances (Other than Direct Vent or "Power Vented" Installations)

		Canadian Installations[1]	US Installations[2]			Canadian Installations[1]	US Installations[2]
A=	Clearance above grade, veranda, porch, deck or balcony	12 inches *(30.5 cm)*	12 inches *(30.5 cm)*	H=	Clearance to each side of center line extended above meter/regulator assembly	3 feet *(.9 m)* within a height 15 feet *(4.6 m)* above the meter/regulator assembly	*b
B=	Clearance to widow or door that may be opened	36 inches *(91.4 cm)*	4 feet *(1.2 m)* below or to the side of opening; 12 inches *(30.5 cm)* above opening	I=	Clearance to service regulator vent outlet or oil tank vent	36 inches *(91.4 cm)*	*b
C=	Clearance to permanently closed window	*b	*b	J=	Clearance to non-mechanical air supply inlet to building or the combustion air inlet to any other appliance	36 inches *(91.4 cm)*	4 feet *(1.2 m)* below or to side of opening; 12 inches *(30.5 cm)* above opening.
D=	Vertical clearance to ventilated soffit located above the terminal within a horizontal distance of 2 feet *(.61 m)* from the center line of the terminal	*b	*b	K=	Clearance to a mechanical air supply inlet	6 feet *(1.8 m)*	3 feet *(.9 m)* above if within 10 feet *(3 m)* horizontally
E=	Clearance to unventilated soffit	*b	*b	L=	Clearance above paved sidewalk or paved driveway located on public property	7 feet *(2.1 m)*†	7 feet *(2.1 m)*†
F=	Clearance to outside corner	*b	*b	M=	Clearance under a veranda, porch, deck, or balcony	12 inches *(30.5 cm)*‡	*b
G=	Clearance to inside corner	36 inches *(91.4 cm)**a	36 inches *(91.4 cm)**a				

[1] In accordance with the current CAN/CGA-B149 *Installation Codes*.
[2] In accordance with the current ANSI Z223.1-(Latest Edition)/NFPA 54 *National Fuel Gas Code*.
† A vent shall not terminate directly above a sidewalk or paved driveway that is located between two single-family dwellings and serves both dwellings.
‡ Permitted only if a veranda, porch, deck or balcony is fully open on a minimum of two sides beneath the floor.
*a) A minimum clearance value determined by testing in accordance with section 2.20.
*b) "Clearance in accordance with local installation codes and the requirements of the gas supplier".

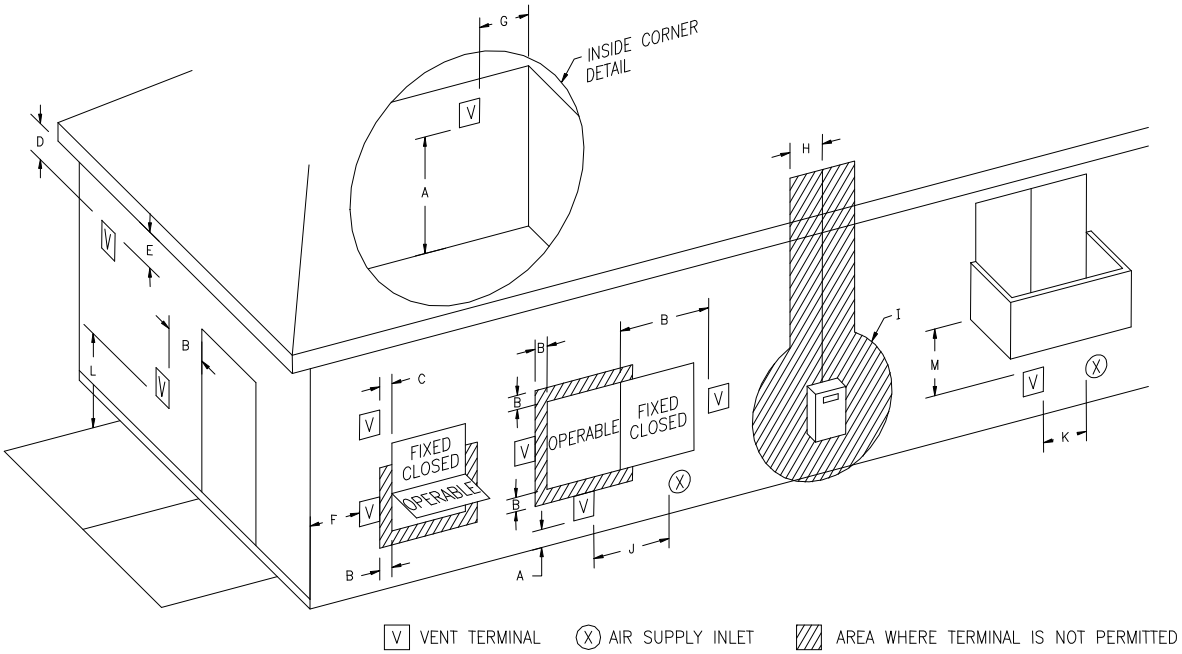

Figure 12b. Direct Vent Terminal Clearances

		Canadian Installations[1]	US Installations[2]			Canadian Installations[1]	US Installations[2]
A=	Clearance above grade, veranda, porch, deck or balcony	12 inches *(30.5 cm)*	12 inches *(30.5 cm)*	H=	Clearance to each side of center line extended above meter/regulator assembly	3 feet *(.9 m)* within a height 15 feet *(4.6 m)* above the meter/regulator assembly	*b
B=	Clearance to widow or door that may be opened	36 inches *(91.4 cm)*	12 inches *(30.5 cm)*	I=	Clearance to service regulator vent outlet or oil tank vent	36 inches *(91 cm)*	*b
C=	Clearance to permanently closed window	*b	*b	J=	Clearance to non-mechanical air supply inlet to building or the combustion air inlet to any other appliance	36 inches *(91.4 cm)*	12 inches *(30.5 cm)*
D=	Vertical clearance to ventilated soffit located above the terminal within a horizontal distance of 2 feet *(.61 m)* from the center line of the terminal	12 inches *(30.5 cm)**a	12 inches *(30.5 cm)**a	K=	Clearance to a mechanical air supply inlet	6 feet *(1.8 m)*	3 feet *(.9 m)* above if within 10 feet *(3 m)* horizontally
E=	Clearance to unventilated soffit	12 inches *(30.5 cm)**a	12 inches *(30.5 cm)**a	L=	Clearance above paved sidewalk or paved driveway located on public property	7 feet *(2.1 m)*†	*b
F=	Clearance to outside corner	*b	*b	M=	Clearance under a veranda, porch, deck, or balcony	12 inches *(30.5 cm)*‡	*b
G=	Clearance to inside corner	36 inches *(91.4 cm)**a	36 inches *(91.4 cm)**a				

[1] In accordance with the current CAN/CGA-B149 *Installation Codes*.
[2] In accordance with the current ANSI Z223.1-(Latest Edition)/NFPA 54 *National Fuel Gas Code*.
† A vent shall not terminate directly above a sidewalk or paved driveway that is located between two single-family dwellings and serves both dwellings.
‡ Permitted only if a veranda, porch, deck or balcony is fully open on a minimum of two sides beneath the floor.
*a) A minimum clearance value determined by testing in accordance with section 2.20.
*b) “Clearance in accordance with local installation codes and the requirements of the gas supplier”.

The vent system must terminate so that proper clearances are maintained as cited in local codes or the latest edition of the National Fuel Gas Code, ANSI Z223.1.73.4e and 7.8a, b as follows:

1. Do not terminate near soffit vents or crawl space or other area where condensate or vapor could create a nuisance or hazard or cause property damage.
2. Do not terminate the exhaust vent terminal where condensate or vapor could cause damage or could be detrimental to the operation of regulators, relief valves, or other equipment.
3. Do not terminate the exhaust vent terminal over public area or walkways where condensate or vapor can cause nuisance or hazard.
4. The vent shall terminate a minimum of 12 inches *(30.5 cm)* above expected snowfall level to prevent blockage of the vent termination.
5. The manufacturer requires the centerline distances between the air intake and exhaust vent terminals to be a **minimum** of 36 inches *(91.4 cm)* apart and the exhaust terminal must extend 6 inches *(15.3 cm)* past the air intake terminal.

Vent pipes serving power vented appliances are classified by building codes as "vent connectors". Required clearances from combustible materials must be provided in accordance with information in this manual under LOCATION OF WATER HEATER and CLEARANCES, and with National Fuel Gas Code and local codes.

All vent pipes and terminals are to have a 1" minimum clearance to combustibles. DO NOT use the placement of insulation or other materials in the required clearance spaces surrounding the venting to combustible material unless otherwise specified.

Horizontal Installation:

In a horizontal application, it is important that condensate not be allowed to buildup in the exhaust vent pipe. To prevent this from happening, the pipe should be installed with a slight upward slope so the condensate will run back toward the water heater. The vent system **must be** supported every 5 feet *(1.5 m)* of vertical run and every 3 feet *(.9 m)* of horizontal run of vent pipe length.

⚠ CAUTION

Failure to properly support the vent piping with hangers and clamps may result in damage to the water heater or venting system.

Stress levels in the pipe and fittings can be significantly increased by improper installation. If rigid pipe clamps are used to hold the pipe in place, or if the pipe cannot move freely through a wall penetration, the pipe may be directly stressed, or high thermal stresses may be formed when the pipe heats up and expands. Install accordingly to minimize such stresses.

Follow the following procedure to vent through the wall:

1. Cut two 2 ½ inch *(6.4 cm)* diameter holes for 2 inch *(5.1 cm)* diameter pipe, in the wall with the centerline hole distances at least 36 inches *(91.4 cm)* apart in the location where the exhaust vent and air intake terminals will exit the outside wall if vented on the same wall. If venting with 3 inch *(7.6 cm)* pipe or 4 inch *(10.2 cm)* diameter pipe, use a bell reducer to reduce to 2 inch *(5.1 cm)* pipe before exiting the wall to use the supplied 2 inch *(5.1 cm)* diameter vent terminals.

2. Use the proper cement to secure the exhaust vent and air intake terminals provided with the water heater to the pipes. The distance between the back edge of the exhaust vent terminal and the exterior wall (see Figure 13) must be 6 inches *(15.3 cm)* more for the exhaust vent terminal than the air intake terminal. Use the proper cement or sealant and assembly procedures to secure the vent connector joints between the terminal and the blower outlet. Provide support brackets for every 3 feet *(.9 m)* of horizontal vent beyond the intake terminal.

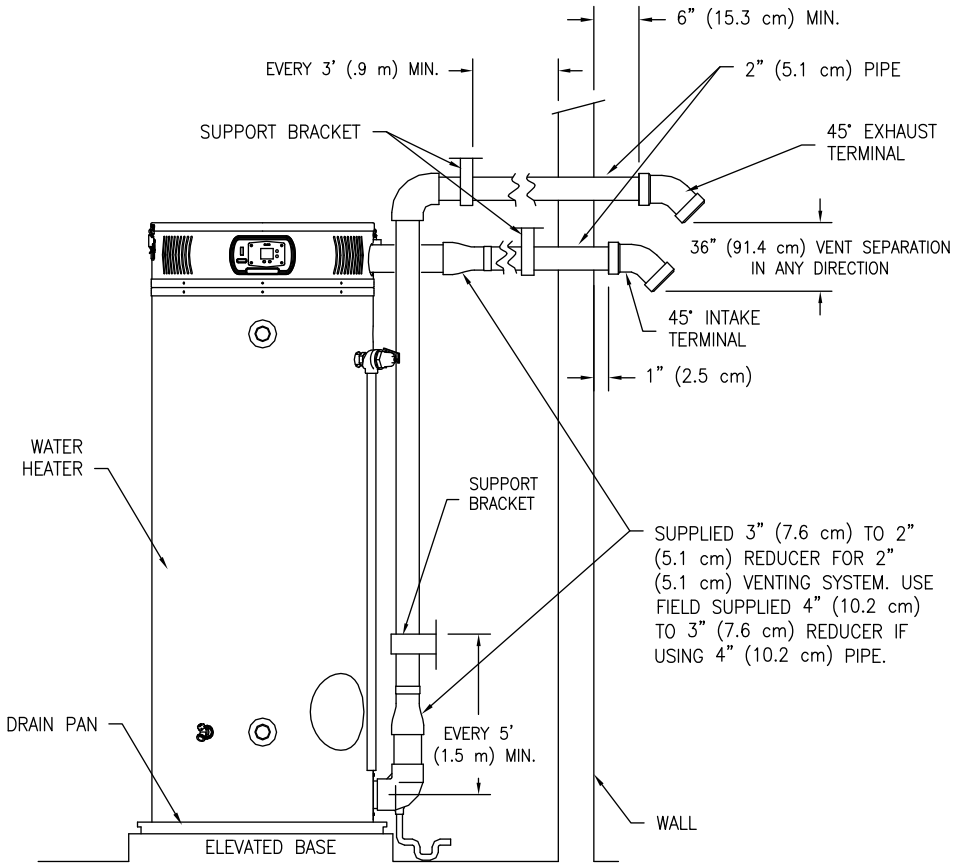

Figure 13. Typical Horizontal Direct Vent System

<u>Vertical Installation:</u>
Vertical venting system **<u>must be</u>** supported every 5 feet *(1.5 m)* of vertical run and every 3 feet *(.9 m)* of horizontal run of vent pipe length.

⚠ CAUTION

Failure to properly support the vent piping with hangers and clamps may result in damage to the water heater or venting system.

Stress levels in the pipe and fittings can be significantly increased by improper installation. If rigid pipe clamps are used to hold the pipe in place, or if the pipe cannot move freely through a wall penetration, the pipe may be directly stressed, or high thermal stresses may be formed when the pipe heats up and expands. Install accordingly to minimize such stresses.

Follow the following procedure to vent through the roof:
1. Cut the necessary holes through the roof and ceiling.
2. Install the exhaust vent and air intake plastic pipes as shown in Figure 14. Make sure that the installation meets the local codes and/or The National Fuel Gas Code ANSI Z223.1 (Latest Edition) or CGA/CAN B149 Installation Code (Latest Edition).

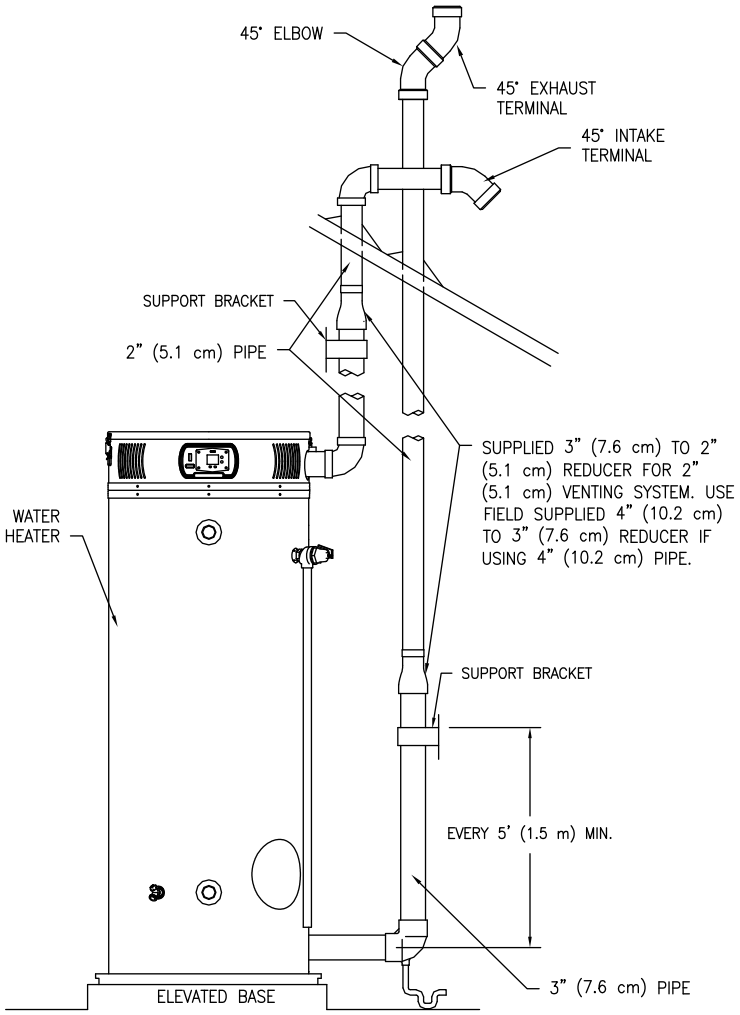

Figure 14. Typical Vertical Direct Vent System Installation
(Note: Intake and exhaust terminals may be on different outside walls.)

Through The Wall Venting With Low Ground Clearance:
When venting cannot exit through the wall at a height greater than or equal to 12 inches *(30.5 cm)* (and above expected snow level) from the ground, then the installation must be modified as shown below (see Figure 15).

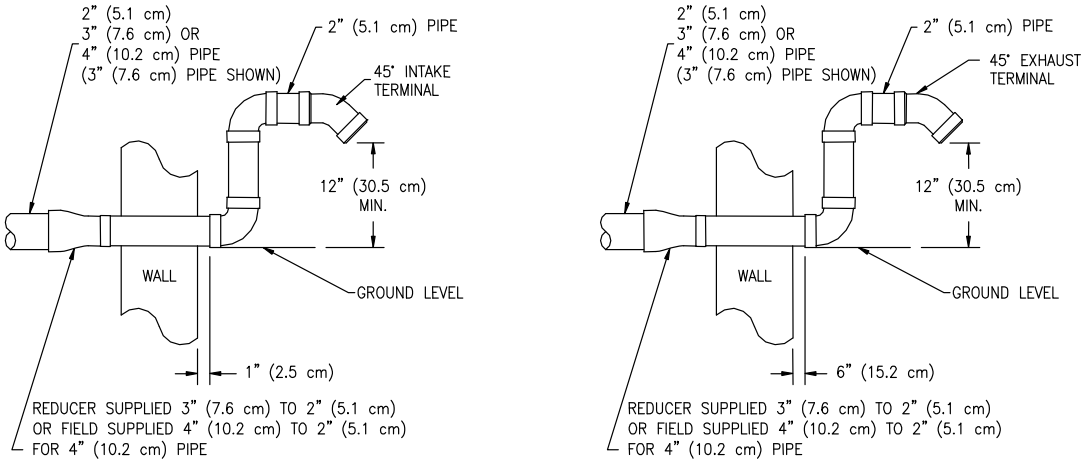

Figure 15. Vent Terminal (Low Ground Clearance)

Maximum Vent Length:

Direct Vent Maximum Vent Length (Combined Maximum Length for Intake and Exhaust)

Model Number	Max Vent Length in feet *(meters)* for 2 inch *(5.1 cm)*	Max Vent Length in feet *(meters)* for 3 inch *(7.6 cm)*	Max Vent Length in feet *(meters)* for 4 inch *(10.2 cm)*
EFR60T120	60 *(18)*	120 *(36)*	170 *(51)*

Table 3

Note: The venting distance shown in the chart above is the combined maximum distance for the intake and exhaust pipe and elbows. The intake and exhaust vent terminals may be in different locations (i.e., different walls or one wall, one roof) provided the intake equivalent venting distance does not exceed the exhaust by more than 30 feet *(9 m)*.

Determining required vent length:

1. Determine the total length of straight vent pipe (in feet) required for both the intake and the exhaust.
2. Add 5 feet *(1.5 m)* of venting for every 90° elbow.
3. Add 2 ½ feet *(.7 m)* of venting for every 45° elbow.
4. **Total vent length cannot exceed "Max Vent Length" in Table 3.**
5. **Air intake cannot exceed exhaust by more than 30 feet *(9 m)* in any venting situation.**

Example of Total Direct Vent Length for EF100T199:
A 3 inch *(7.6 cm)* venting system has a total of six 90-degree elbows and a total straight pipe length of 65 feet *(19.5 m)* (includes both intake and exhaust pipe).
Equivalent vent length for elbows: 6 x 5 feet *(1.5 m)* = 30 feet *(9 m).*
Total equivalent vent distance = 65 feet *(19.5 m)* + 30 feet *(9 m)* = 95 feet *(28.5 m)* total equivalent vent length. This is below the maximum allowed distance of 100 feet *(30 m)* for this model using 3 inch *(7.6 cm)* vent.

NOTICE

Do not include the condensate elbow or vent terminals in determining maximum vent length.

POWER VENT INSTALLATION
Power venting is where the indoor air is used and the exhaust is vented to the outside. Venting may be run horizontally through an outside wall or vertically through a roof through using either 2 inch *(5.1 cm)*, 3 inch *(7.6 cm)* or 4 inch *(10.2 cm)* diameter pipe. This water heater is supplied with a 2 inch *(5.1 cm)* diameter screened intake and exhaust elbow, referred to as the air intake terminal and the exhaust vent terminal.

Power Vent Terminal Location:
Refer to the "Direct Vent Terminal Location" section previously mentioned to determine the proper exhaust vent location. Plan the vent system layout so that proper clearances are maintained from plumbing and wiring.
Vent pipes serving power vented appliances are classified by building codes as "vent connectors". Required clearances from combustible materials must be provided in accordance with information in this manual under LOCATION OF WATER HEATER, and CLEARANCES, and with National Fuel Gas Code and local codes.

All vent pipes and terminals are to have a 1" minimum clearance to combustibles. DO NOT use the placement of insulation or other materials in the required clearance spaces surrounding the venting to combustible material unless otherwise specified.

Horizontal Installation:
In a horizontal application, it is important that condensate not be allowed to buildup in the exhaust vent pipe. To prevent this from happening, the pipe should be installed with a slight upward slope of ¼ inch *(.6 cm)* per foot *(.3 m)*. The vent system **must be** supported every 5 feet *(1.5 m)* of vertical run and every 3 feet *(.9 m)* of horizontal run of vent pipe length.

⚠ CAUTION

Failure to properly support the vent piping with hangers and clamps may result in damage to the water heater or venting system.

Stress levels in the pipe and fittings can be significantly increased by improper installation. If rigid pipe clamps are used to hold the pipe in place, or if the pipe cannot move freely through a wall penetration, the pipe may be directly stressed, or high thermal stresses may be formed when the pipe heats up and expands. Install accordingly to minimize such stresses.

Follow the following procedure to vent through the wall:

1. Cut one 2 ½ inch *(6.4 cm)* diameter hole for 2 inch (*5.1 cm)* diameter pipe. If venting with 3 inch *(7.6 cm)* pipe or 4 inch *(10.2 cm)* diameter pipe, use a bell reducer to reduce to 2 inch *(5.1 cm)* pipe before exiting the wall to use the supplied 2 inch *(5.1 cm)* diameter vent terminal.
2. Use the proper cement or sealant to secure the exhaust vent terminal provided with the water heater to the pipes. The distance between the back edge of the exhaust vent terminal and the exterior wall (see Figure 16) must be 6 inches *(15.3 cm).* Use the proper cement and assembly procedures to secure the vent connector joints between the terminal and the blower outlet. Provide support brackets for every 3 feet *(.9 m)* of horizontal vent.

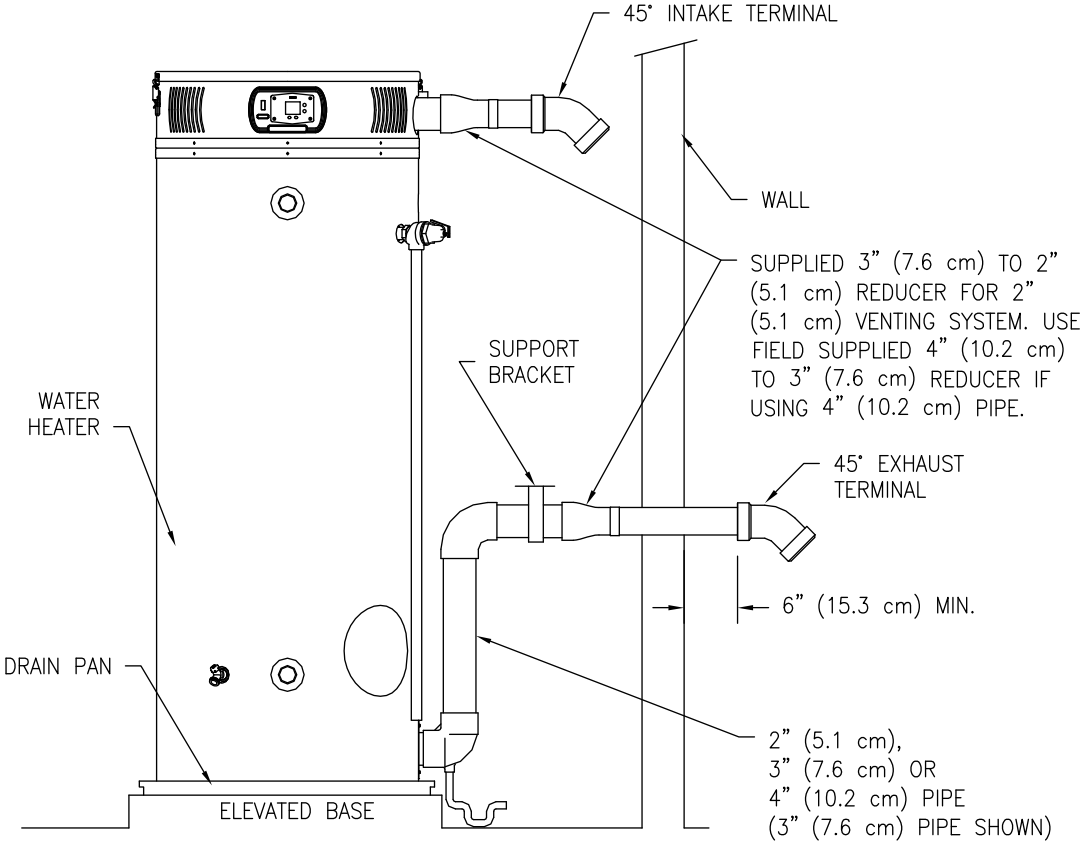

Figure 16. Typical Horizontal Power Vent System

<u>Vertical Installation:</u>
Vertical venting **<u>must be</u>** supported every 5 feet *(1.5 m)* of vertical run and every 3 feet *(.9 m)* of horizontal run of vent pipe length.

Stress levels in the pipe and fittings can be significantly increased by improper installation. If rigid pipe clamps are used to hold the pipe in place, or if the pipe cannot move freely through a wall penetration, the pipe may be directly stressed, or high thermal stresses may be formed when the pipe heats up and expands. Install accordingly to minimize such stresses.

⚠ CAUTION

Failure to properly support the vent piping with hangers and clamps may result in damage to the water heater or venting system.

Follow the following procedure to vent through the roof:

1. Cut the necessary holes through the roof and ceiling.
2. Install the exhaust vent and air intake plastic pipes as shown in Figure 17. Make sure that the installation meets the local codes and/or The National Fuel Gas Code ANSI Z223.1 (Latest Edition) or CGA/CAN B149 Installation Code.

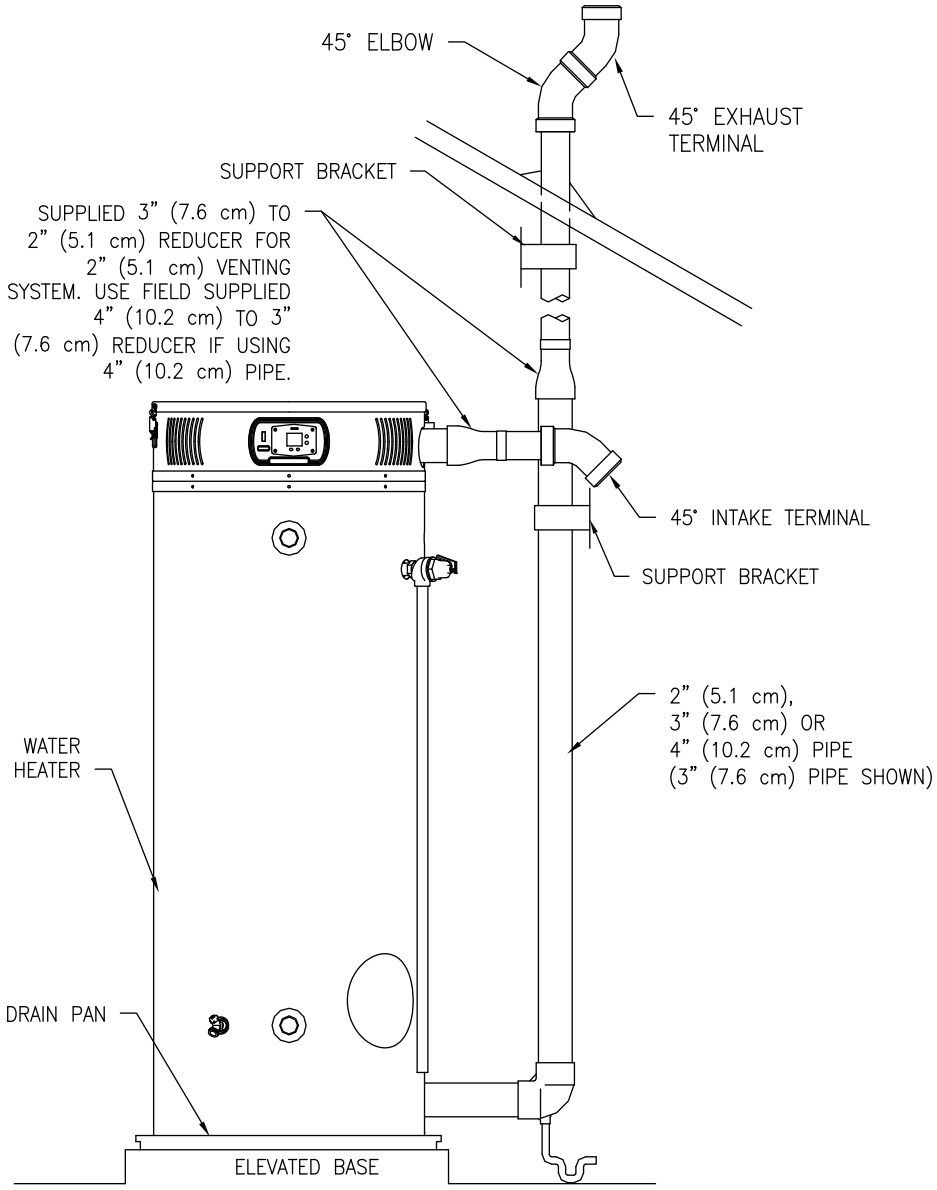

Figure 17. Typical Vertical Power Vent System Installation

Through The Wall Venting With Low Ground Clearance:
When venting cannot exit through the wall at a height greater than or equal to 12 inches *(30.5 cm)* (and above expected snow level) from the ground, then the installation must be modified as shown below (see Figure 18). Refer to Tables 3 or 4 for maximum venting lengths using 2 inch *(5.1 cm)*, 3 inch *(7.6 cm)* or 4 inch *(10.2 cm)* diameter plastic pipe.

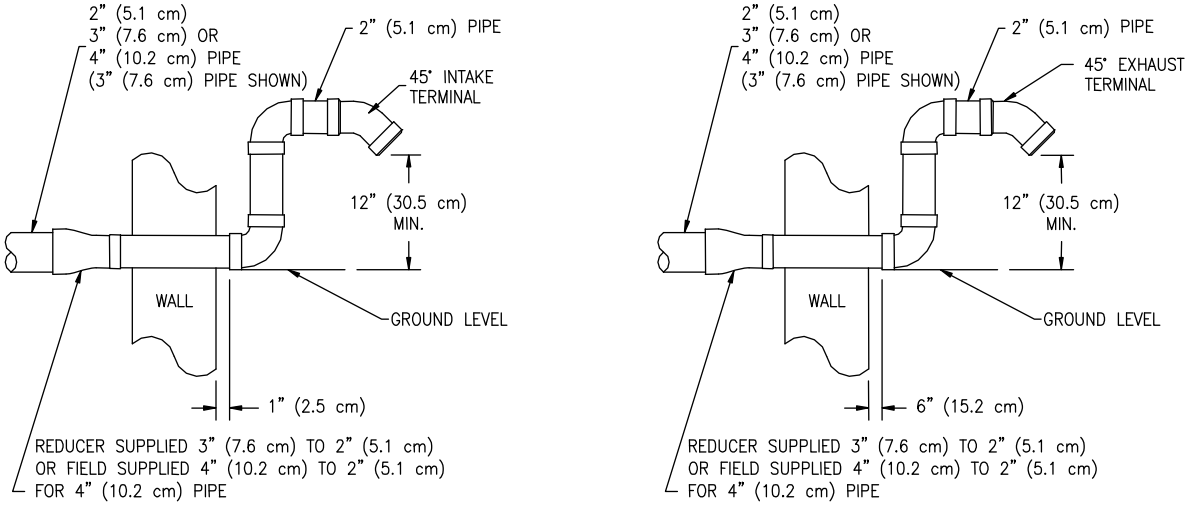

Figure 18. Vent Terminal (Low Ground Clearance)

Maximum Vent Length Determination

Power Vent Maximum Vent Length

Model Number	Max Vent Length in feet *(meters)* for 2 inch *(5.1 cm)*	Max Vent Length in feet *(meters)* for 3 inch *(7.6 cm)*	Max Vent Length in feet *(meters)* for 4 inch *(10.2 cm)*
EFR60T120, EF100T150	60 *(18)*	120 *(36)*	170 *(51)*

Table 4

Determining required vent length:
1. Determine the total length of straight vent pipe (in feet) required.
2. Add 5 feet *(1.5 m)* of venting for every 90° elbow.
3. Add 2 ½ feet *(.7 m)* of venting for every 45° elbow.
4. **Total vent length cannot exceed "Max. Vent Length" in Table 4.**

Example of Total Vent Length for EF100T199 with a power vented installation:
A 3 inch *(7.6 cm)* venting system has a total of six 90-degree elbows and a total straight pipe length of 55 feet *(16.5 m)*.
Equivalent vent length for elbows: 6 x 5 feet *(1.5 m)* = 30 feet *(9 m)*.
Total equivalent vent distance = 55 feet *(16.5 m)* + 30 feet *(9 m)* = 85 feet *(25.5 m)* total equivalent vent length. This is below the maximum allowed distance of 100 feet *(30 m)* for this model using 3 inch *(7.6 cm)* vent.

NOTICE

Do not include the 3 inch *(7.6 cm)* condensate elbow or vent terminals in determining maximum vent length.

MULTIPLE INTAKE/EXHAUST TERMINAL SEPARATION DISTANCES

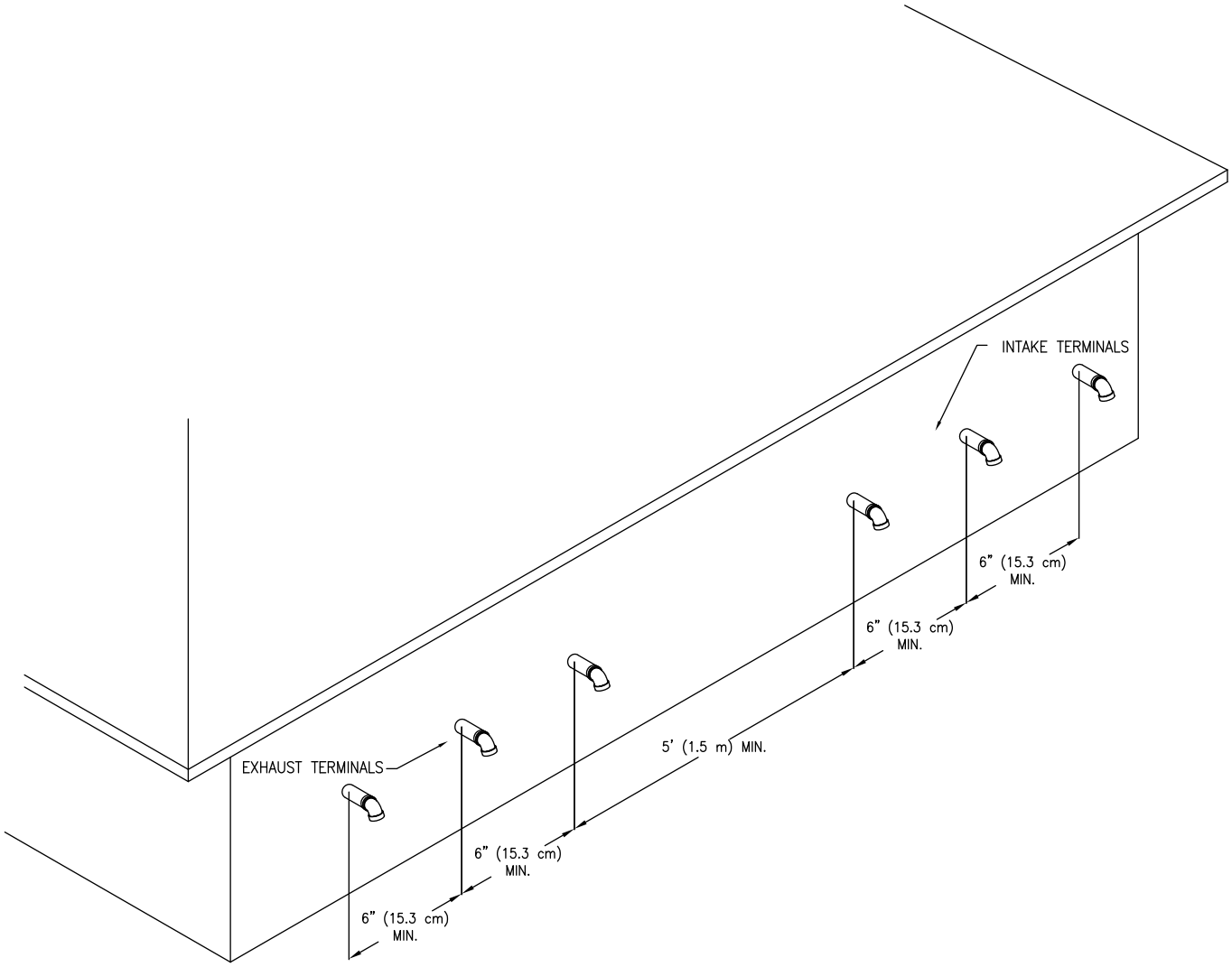

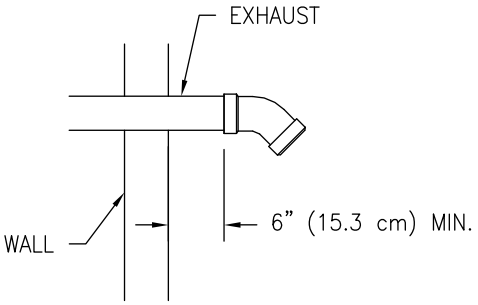

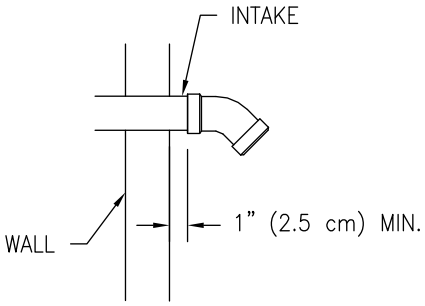

Note: When installing multiple intake/exhaust terminals on the same wall of a building, the nearest intake terminal must be at least 5 feet *(1.5 m)* from the nearest exhaust terminal.

CONCENTRIC VENT TERMINAL INSTALLATION PROCEDURE

⚠ WARNING

Improper installation, adjustment, service, or maintenance can cause property damage, personal injury, or death. Consult a qualified installer, service agency, or the gas supplier for information or assistance.

This kit must be used only for terminating this water heater. Do not use this termination kit for any other appliance. Using this kit on other appliances and/or water heaters can result in property damage, personal injury, or death.

DO NOT operate this water heater until the installation and assembly of this kit is complete and the piping completed. Failure to complete installation before operation can result in property damage, personal injury, or death.

Before beginning any installation, be sure the main electrical disconnect switch is in the OFF position. Electrical shock can cause personal injury or death.

DO NOT operate this water heater with the rain cap removed or recirculation of combustion products may occur. Water may also collect inside larger combustion-air pipe and flow to the burner assembly. Failure to follow this warning could result in product damage, or improper operation, personal injury or death.

⚠ CAUTION

DO NOT use field-supplied couplings to extend pipes. Airflow restriction will occur and the water heater pressure switches may cause intermittent problems.

Vertical Installation:

1. Become familiar with concentric vent kit part no. 239-44069-02. Refer to the previous section on determining the maximum venting distance and pipe diameter required for the installation. For venting with 3 inch *(7.6 cm)* and 4 inch *(10.2 cm)* diameter pipe, use a bell reducer to reduce to the 2 inch *(5.1 cm)* diameter vent size to connect to the 2 inch *(5.1 cm)* vent terminal connections.

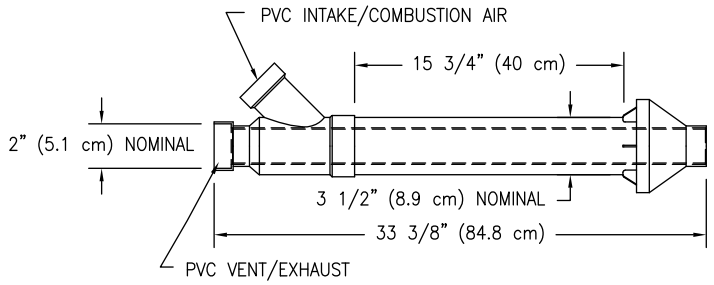

Figure 19. Dimensional Layout of Concentric Vent Kit

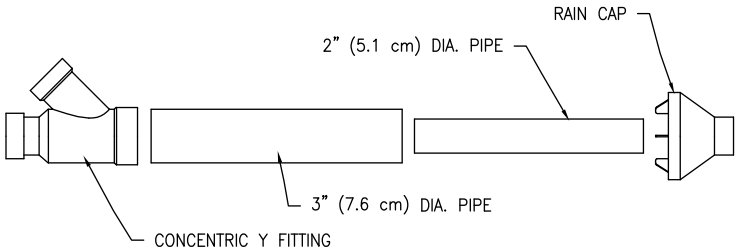

Figure 20. Concentric Vent Kit Part Identification

2. Determine the best location for the termination kit.
3. Cut the recommended 4 inch *(10.2 cm)* diameter hole.
4. Partially assemble vent kit by performing the following:
   a. Cement concentric Y fitting to larger diameter pipe. (See Figure 20).
   b. Cement rain cap to smaller diameter pipe. (See Figure 21).

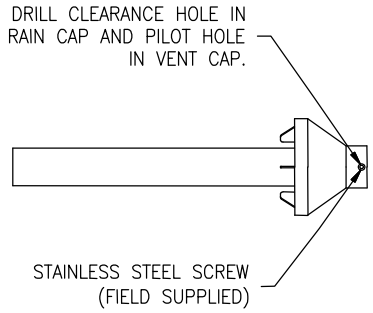

Figure 21. Rain Cap to Small Vent Pipe Assembly

5. Install concentric Y fitting and pipe assembly through the structure's hole and field-supplied roof boot/flashing. Do not allow insulation or other materials to accumulate inside pipe assembly when installing through the hole.
6. Secure assembly to roof structure as shown in Figure 22 using field-supplied metal strapping or equivalent support material.

NOTICE
Ensure termination height is above the roof surface or anticipated snow level. See Figure 22.
If assembly is too short to meet height requirements, the two pipes supplied in the kit may be replaced by using the same diameter pipe. DO NOT extend the overall dimension by more than 60 inches *(152.4 cm)*. See Figure 19.

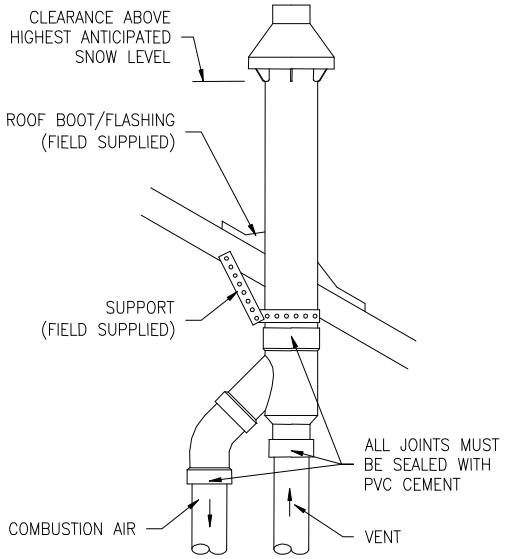

Figure 22. Concentric Vent Roof Top Attachment

7. Install rain cap and small diameter pipe assembly in roof penetration assembly. Ensure small diameter pipe is cemented and bottomed in Y concentric fitting.
8. Cement heater combustion-air and vent pipes to concentric Y fitting assembly (Figure 20). See Figure 22 for proper pipe attachment.
9. Operate heater through one cycle to ensure combustion-air and vent pipes are properly connected and sealed to concentric vent termination connections.

Horizontal Installation:

1. Become familiar with coaxial vent kit part no. 239-44069-02 as shown in Figures 19 through 21.
2. Determine the best location for the termination kit.

NOTICE
Position termination where vent vapors will not be adversely affected by wind condition.
Position termination where it will not be damaged or be subjected to foreign objects.
Position termination where vapors will not be objectionable.

3. Cut the recommended 4 inch *(10.2 cm)* diameter hole.
4. Partially assemble vent kit.
   a. Cement Y concentric fitting to larger diameter kit pipe. (See Figure 20).
   b. Cement rain cap to smaller diameter kit pipe. (See Figure 21).

5. Install concentric Y fitting and pipe assembly through the structure's hole and field-supplied roof boot/flashing. Do not allow insulation or other materials to accumulate inside pipe assembly when installing through the hole.
6. Install rain cap and small diameter pipe assembly in concentric Y fitting and large pipe assembly. Ensure small diameter pipe is cemented and bottomed in concentric Y fitting.
7. Secure assembly to structure as shown in Figure 23. Ensure clearances as shown in Figure 23.

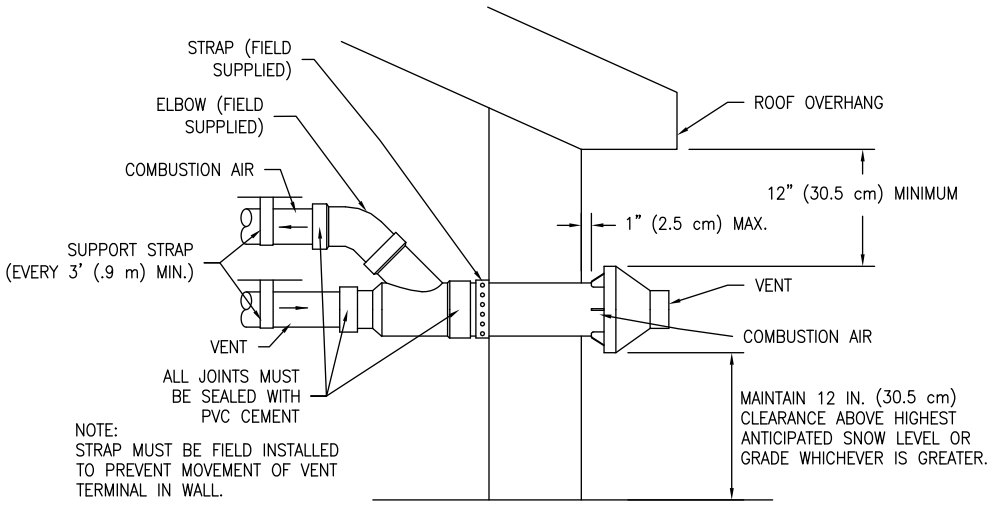

Figure 23. Concentric Vent Side Wall Attachment

8. Cement heater combustion-air and vent pipes to concentric Y fitting termination assembly. See Figure 23 for proper pipe attachment.
9. Operate heater through one cycle to ensure combustion-air and vent pipes are properly connected and sealed to concentric vent termination connections.

VENT PIPE PREPARATION

⚠ WARNING
DO NOT attempt to start this water heater until vent pipe solvent fumes completely clear from the room and inside the vent piping.

INITIAL PREPARATION

1. Make sure the solvent cement you are planning to use is designed for the specific application you are attempting.
2. Know the physical and chemical characteristics and limitations of the PVC, PVC cellular core, ABS or CPVC piping materials that you are about to use.
3. Know the reputation of your pipe and cement manufacturer and their products.
4. Know your own qualifications or those of your contractor. The solvent welding technique of joining PVC, PVC cellular core, ABS or CPVC pipe is a specialized skill just as any other pipe fitting technique.
5. Closely supervise the installation and inspect the finished job before start-up.
6. Contact the manufacturer, supplier, or competent consulting agency if you have any questions about the application or installation of PVC, PVC cellular core, ABS or CPVC pipe.
7. Take the time and effort to do a professional job. Shortcuts will only cause you problems and delays in start-up. The majority of failures in these systems are the result of shortcuts and/or improper joining techniques.

SAFETY PRECAUTION: PRIMERS AND CEMENTS ARE EXTREMELY FLAMMABLE AND MUST NOT BE STORED OR USED NEAR HEAT OR OPEN FLAME. ALSO, USE ONLY IN A WELL VENTILATED AREA.

SECTION VII: GAS CONNECTIONS

⚠ WARNING

Connect this water heater only to the type of gas as shown on the rating plate. Use clean black iron pipe or equivalent material approved by local codes and ordinances. (Dirt and scale from the pipe can enter the gas valve and cause it to malfunction). The inlet gas line must have at least a 3 inch *(7.62 cm)* drip leg (sediment trap) installed as close to the water heater's gas valve as possible. A ground joint union must be installed in the gas supply line, as close to the water heater as possible, to permit servicing of the water heater. Compounds used on the threaded joints of the gas piping must be resistant to the action of liquefied petroleum gases/propane gas. DO NOT apply pipe dope to the gas valve inlet and make certain that no pipe dope has become lodged in the inlet screen of the gas valve. Extreme care must be taken to ensure no pipe dope enters the gas valve and to avoid excessive torque when tightening the gas supply line to the gas valve. Excessive torque may result in cracking of the gas valve housing. The suggested maximum torque is 31.5 foot lbs. *(4.4 kg-m)*. The manufacturer of this water heater will not be liable for any damage or injury caused as a result of a cracked gas inlet as a result of excessive torque.

This water heater and its gas connection must be leak tested before placing the water heater in operation. Check for gas leaks with a soap and water solution and a brush or a commercial leak detector fluid.
NEVER USE A MATCH OR OPEN FLAME FOR TESTING!

The water heater is not intended for operation at higher than 14 inches *(3483.8 Pa)* water column (½ psi *(3.5 kPa)*) supply gas pressure. Higher gas supply pressures require supplemental reducing service regulation. Exposure to higher gas supply pressure may cause damage to the gas controls, which could result in a fire or explosion. If overpressure has occurred such as through improper testing of gas lines or emergency malfunction of the supply system, the gas valve must be checked for safe operation. Make sure that the outside vents on the supply regulators and the safety vent valves are protected against blockage. These are parts of the gas supply system, not the water heater.

⚠ CAUTION

The water heater and individual shutoff valve must be disconnected from the gas supply piping system during any pressure testing of the system at test pressures in excess of ½ psi *(3.5 kPa)*. The water heater must be isolated from the gas supply piping system by closing its manual shutoff valve during any pressure testing of the gas supply system at test pressures equal to or less than ½ psi *(3.5 kPa)*. The supply line must be capped when not connected to the water heater.

If copper supply lines are used, they must be internally tinned and certified for gas service.

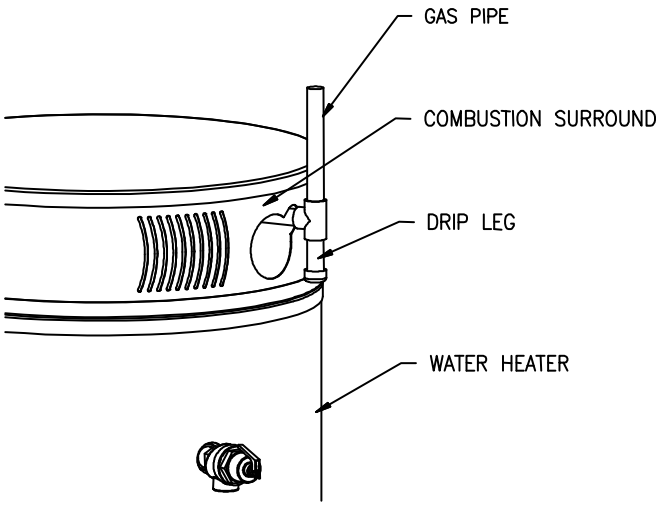

Figure 24. Drip Leg

The gas supply lines must meet all requirements of the National Fuel Gas Code ANSI Z223.1 (Latest Edition), or in Canada CAN/CGA B149.1 Natural Gas Installation Code (Latest Edition) or CAN/CGA B149.2 Propane Installation Code (Latest Edition).

GAS METER SIZE – NATURAL GASES ONLY

Be sure that the gas meter has sufficient capacity to supply the full rated gas input of the water heater as well as the requirements of all other gas fired equipment supplied by the meter. If the gas meter is too small, ask the gas company to install a larger meter having adequate capacity.

GAS PRESSURE REGULATION

Main line gas pressure to the water heater should be between a maximum 14 inches *(3483.8 Pa)* W.C. and a minimum supply pressure as shown on the rating plate. The inlet gas pressure must not exceed the maximum value. In some installations, a regulator sized for the input rating of the water heater will need to be installed just ahead of the inlet gas connection to the water heater to reduce excess gas pressure or surges in gas pressure.

BEFORE PLACING THE WATER HEATER IN OPERATION, CHECK FOR GAS LEAKAGE. USE SOAP AND WATER SOLUTION OR OTHER MATERIAL ACCEPTABLE FOR THE PURPOSE OF LOCATING GAS LEAKS.

⚠ WARNING

DO NOT USE MATCHES, CANDLES, FLAME OR OTHER SOURCES OF IGNITION FOR THIS PURPOSE.

SECTION VIII: ELECTRICAL CONNECTIONS

⚠ WARNING

Turn off or disconnect the electrical power supply to the water heater before servicing. Label all wires prior to disconnection when servicing controls. Wiring errors can cause improper and dangerous operation. Verify proper operation after servicing.

All electrical wiring must be installed and grounded in accordance with local codes, or in the absence of local codes, the National Electrical Code, ANSI/NFPA 70 and/or CSA C22.2 Electrical Code.

The water heater must be wired to a 120 VAC, 60 Hz, 15A power supply. The water heater **must be** wired on a separate circuit and breaker. If a flexible line cord and plug is permitted by local code, then provide a three wire grounding type receptacle within reach of the line cord provided on the control box. Do not plug the line cord into a receptacle that can have the power supply interrupted by a switch that is used to control lights or another appliance.

If wiring in conduit is required, cut the line cord close to the control board and make the appropriate wiring connections. Install an electrical conduit connector on the outside jacket of the water heater. Refer to the wiring diagram for the correct connections to each wire lead.

⚠ CAUTION

This water heater **must** be wired on a separate circuit. Failure to wire on a separate circuit may cause improper operation or failure of the electrical components of the water heater. Refer to the "Electrical Connections" section of the Installation and Operating Instructions Manual for complete instructions on electrical wiring and connections to the water heater.

Do not energize the electric circuit before the water heater tank is filled with water.

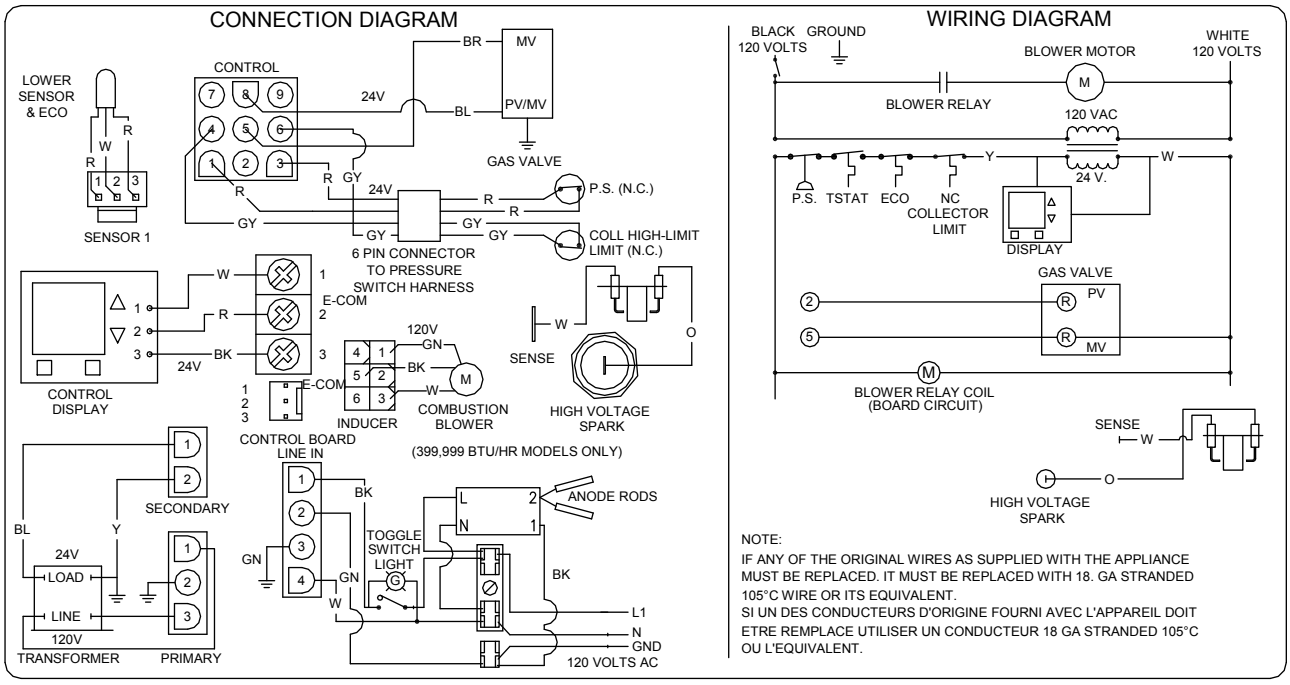

Figure 25. Wiring Diagram and Schematic

SECTION IX: OPERATING INSTRUCTIONS

⚠ WARNING

Water heaters are heat-producing appliances. To avoid damage or injury there must be no materials stored against the water heater or direct vent system, and proper care must be taken to avoid unnecessary contact (especially by children) with the water heater and direct vent system. UNDER NO CIRCUMSTANCES SHOULD FLAMMABLE MATERIALS, SUCH AS GASOLINE OR PAINT THINNER BE USED OR STORED IN THE VICINITY OF THIS WATER HEATER OR IN ANY LOCATION FROM WHICH FUMES COULD REACH THE WATER HEATER.

Installation or service of this water heater requires ability equivalent to that of a licensed tradesman in the field. Plumbing, air supply, venting, gas supply and electrical work are required.

Light the unit in accordance with the operating instructions label attached to the water heater.

Under no circumstances should the input rate exceed the input rate shown on the water heater rating plate. Over firing could result in damage or sooting of the water heater.

If the unit is exposed to the following, do not operate water heater until all corrective steps have been made by a factory authorized independent service contractor or qualified service professional.

1. Flooding to or above the level of the burner or controls
2. External firing
3. Damage
4. Firing without water
5. Sooting

NEVER OPERATE THE WATER HEATER WITHOUT FIRST BEING CERTAIN IT IS FILLED WITH WATER AND A TEMPERATURE AND PRESSURE RELIEF VALVE IS INSTALLED IN THE RELIEF VALVE OPENING OF THE WATER HEATER.

GENERAL INSTRUCTIONS

TO FILL THE WATER HEATER

1. Close the water heater drain valve by turning the knob or valve stem clockwise. If alternative water connections are provided but not used, make certain they are plugged (i.e. right side connections).
2. Open the cold water supply shut-off valve.
3. Open several hot water faucets to allow air to escape from the system.
4. When a steady stream of water flows from the faucets, the water heater is filled. Close the faucets and check for water leaks at the water heater drain valve, combination temperature and pressure relief valve and the hot and cold water connections.

SEQUENCE OF OPERATION

1. Thermostat starts with heating cycle
2. Blower ON
3. Blower pre-purge
4. Spark rod sparks to the burner and gas valve opens – Burner ignition
5. Main burner ON
6. Flame signal confirmed
7. Thermostat satisfied
8. Gas valve closes – Main burner OFF
9. Blower post-purge

LIGHTING AND SHUT-DOWN INSTRUCTIONS

FOR YOUR SAFETY READ BEFORE LIGHTING

WARNING: If you do not follow these instructions exactly, a fire or explosion may result causing property damage, personal injury or loss of life.

A. This appliance does not have a pilot. It is equipped with an ignition device which automatically lights the burner. Do not try to light the burner by hand.

B. BEFORE OPERATING smell all around the appliance for gas. Be sure to smell next to the floor because some gas is heavier than air and will settle on the floor.

WHAT TO DO IF YOU SMELL GAS:

- Do not try to light any appliance.
- Do not touch any electric switch; do not use any phone in your building.
- Immediately call your gas supplier from a neighbor's phone. Follow the gas supplier's instructions.
- If you cannot reach your gas supplier, call the fire department.

C. Turn off main power to the water heater.

D. Do not use this appliance if any part has been under water. Immediately call a qualified service technician to inspect the appliance and to replace any part of the control system and any gas control which has been under water.

LIGHTING INSTRUCTIONS

1. STOP! read the safety information above on this label.
2. Set the thermostat to lowest setting.
3. Turn off all electrical power to the appliance.
4. This appliance does not have a pilot. It is equipped with an ignition device which automatically lights the burner. Do not try to light the burner by hand.
5. Turn off the main power switch.
6. Wait (5) minutes to clear out any gas. If you then smell gas, STOP! Follow "B" in the safety information above on this label if you don't smell gas, go to next step.
7. Turn on main power.
8. Set the thermostat to desired setting.

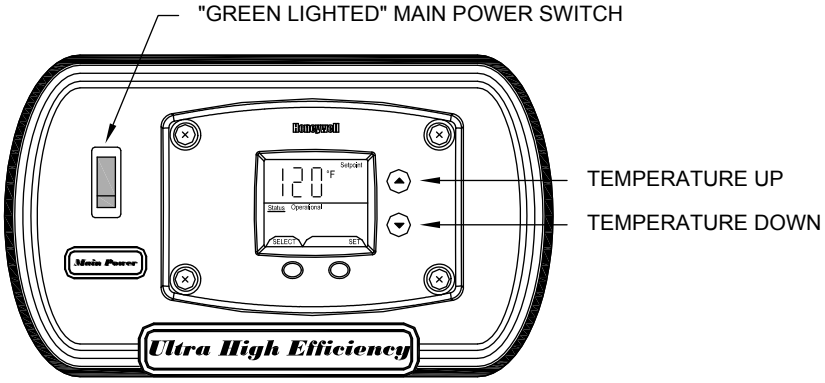

TO TURN OFF GAS TO APPLIANCE

1. Set the thermostat to lowest setting.
2. Turn off the main power switch.

Figure 26. Lighting Instruction Label

TEMPERATURE ADJUSTMENT

APPROXIMATE TIME/TEMPERATURE RELATIONSHIPS IN SCALDS	
120°F *(49°C)*	More than 5 minutes
125°F *(52°C)*	1½ to 2 minutes
130°F *(54°C)*	About 30 seconds
135°F *(57°C)*	About 10 seconds
140°F *(60°C)*	Less than 5 seconds
145°F *(63°C)*	Less than 3 seconds
150°F *(66°C)*	About 1½ seconds
155°F *(68°C)*	About 1 second

⚠ SCALDING WARNING

ASSE APPROVED MIXING DEVICE MUST BE INSTALLED TO PROVIDE PROTECTION FROM SCALDING

This water heater can deliver scalding temperature water at any faucet in the system if installed without installing the supplied ASSE mixing device. By setting the thermostat on this water heater to obtain an increased water temperature without properly installing the supplied mixing device, you may create the potential for scald injury. To protect against injury, the supplied ASSE approved mixing device (a device to limit the temperature of water to protect against scald injury via mixing hot and cold water supply) must be properly installed in the water system. This valve will reduce point of discharge temperature in branch supply lines.

⚠ CAUTION

This water heater, when set at a lower temperature setting is not capable of producing hot water of sufficient temperature for sanitizing purposes.

This water heater is equipped with an energy cut out device to prevent overheating. Should overheating occur or the gas supply fails to shut off, turn off the control panel power switch to the appliance and call a qualified service agency.

NOTICE

The lower the temperature setting, the greater the energy efficiency, both to heat the water and to maintain the storage temperature during standby periods. Lower water temperatures also extend tank life. Remember, no water heating system will provide exact temperatures at all times. Allow a few days of operation at this setting to determine the correct temperature setting consistent with the requirements for the installation.

The water heater temperature setting is adjusted by using the control display mounted to control surround jacket of the water heater. The water heater thermostat is set at the lowest setpoint of 70°F *(21°C)* when shipped from the factory. The control display shows the temperature setpoint in degrees Fahrenheit (°F) or degrees *Celsius (°C)*, and the status of the water heater ("Idle" or "Heating"). If the water heater is functioning normally, the display will also show "Operational".

For energy efficient operation of your water heater, the suggested initial temperature setting is 120°F *(49°C)*. During the winter season, or any cold period, you may desire a higher temperature setting to adjust for the colder incoming water. This adjustment, however, may cause additional condensation to form on the cooler tank surface. This does not mean the tank is leaking. During summer months, the warmer incoming water temperatures will benefit the performance of your water heater and reduce the amount of condensation developed.

Condensation does not mean your tank is leaking. Most of reported tank leaks on installation are proven to be condensation. To avoid unnecessary inconvenience and expense, make sure the tank is leaking before calling an independent servicing contractor or qualified service professional.

If the water heater is to remain idle for 30 days or more or is subjected to freezing temperatures while shut off, the water heater and piping should be fully drained and the drain valve should be left fully open. Refer to the “General Operation” section of this Installation and Operating Instructions Manual for the procedure on draining the water heater.

⚠ WARNING

If the water heater display does not show “Operational” in the “Status” indicator, there may be an operating malfunction with the water heater. If this is the case, a numeric code will be displayed. Refer to the label next to the display for the definition of the error code and call your plumbing professional or service agent to service the water heater. Do not try to reset the water heater without having a qualified service person to diagnose and correct the problem. If the display is blank or does not show an error code, make sure there is power to the water heater.

Setting the water temperature to the maximum set point can result in scalding hot water delivered to the faucets. It is highly recommended that the maximum setpoint be adjusted to the lowest temperature possible for the needs of the installation. See following section to change the maximum setpoint limit (max setpoint). Make sure the water heater control display is not in a public area that can result in the temperature settings being improperly adjusted. See previous warning on scalds and an ASSE approved mixing valve.

NOTICE

When the maximum setpoint is reached, the display will show “Max Setpoint” without the setpoint value. The maximum setting is equal to approximately 180˚F *(82˚C)*.
The default temperature setpoint from the factory is 70˚F *(21˚C)*.

Water Heater Display and Control Buttons

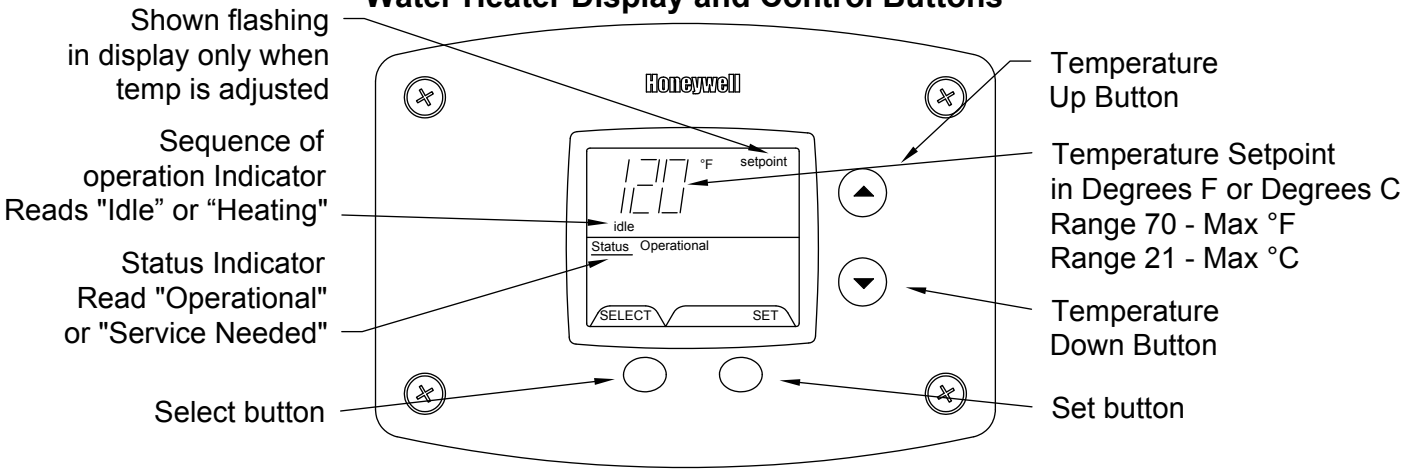

To Increase Setpoint Temperature

Step 1: Depress and hold “Temperature Up” button until desired setpoint temperature appears in the display.

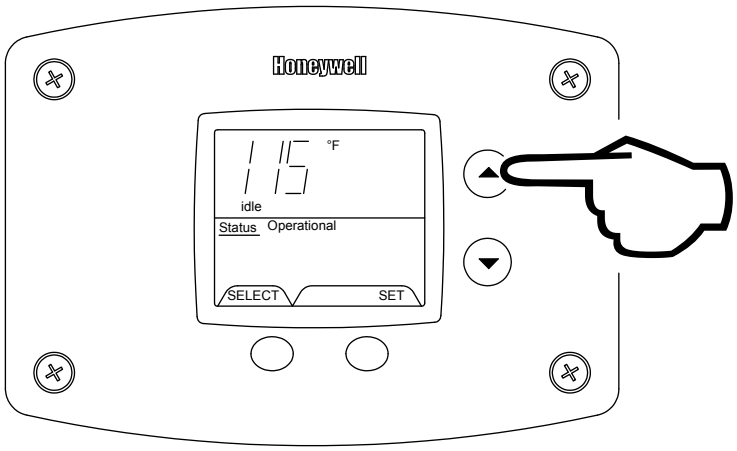

Step 1

Step 2: “Setpoint” indicator begins flashing in the display after pressing “Temperature Up” button.

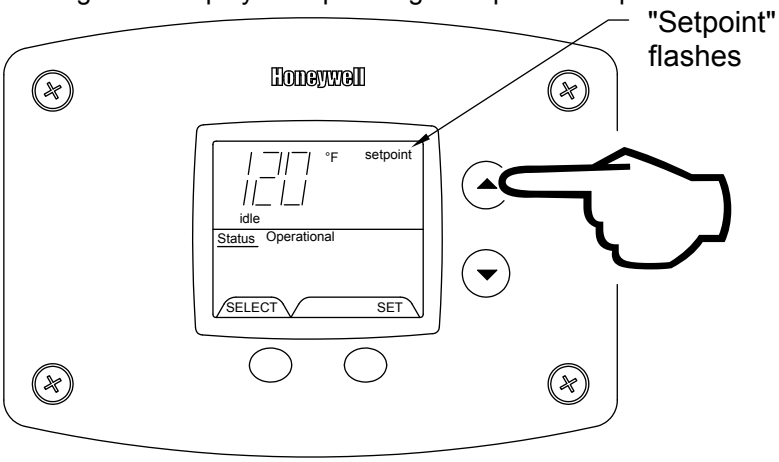

Step 2

Step 3: Press “SET” button for new setting to take effect immediately. “Setpoint” will stop flashing. If the “SET” button is not pressed, the new temperature setting will take effect in approximately 10 seconds.

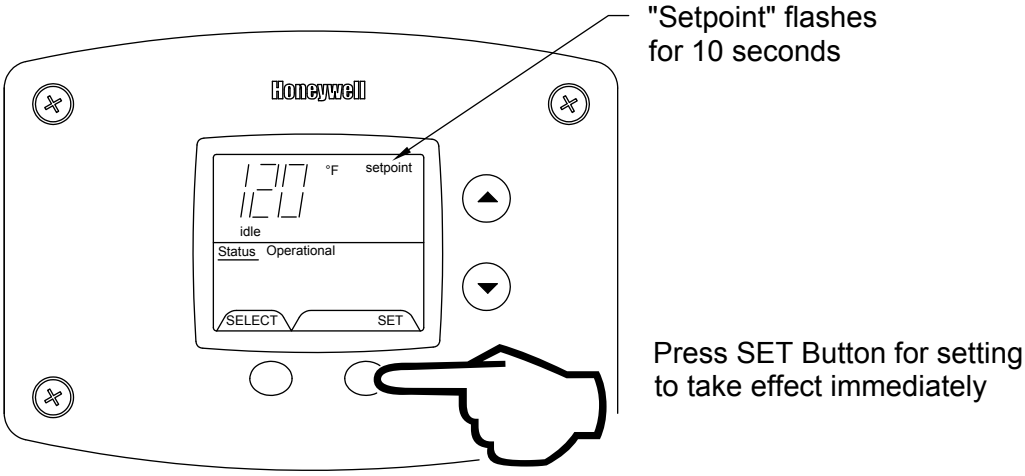

Step 3

To Decrease Setpoint Temperature

Step 1: Depress and hold “Temperature Down” button until desired setpoint temperature appears in the display.

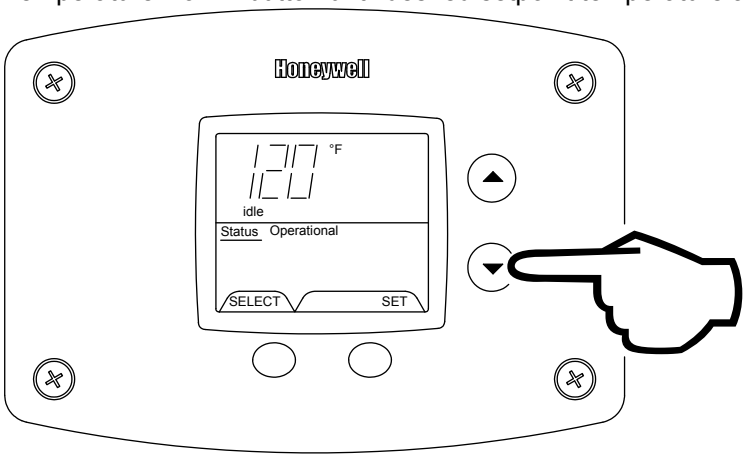

Step 1

Step 2: “Setpoint” indicator begins flashing in the display after pressing “Temperature Down” button.

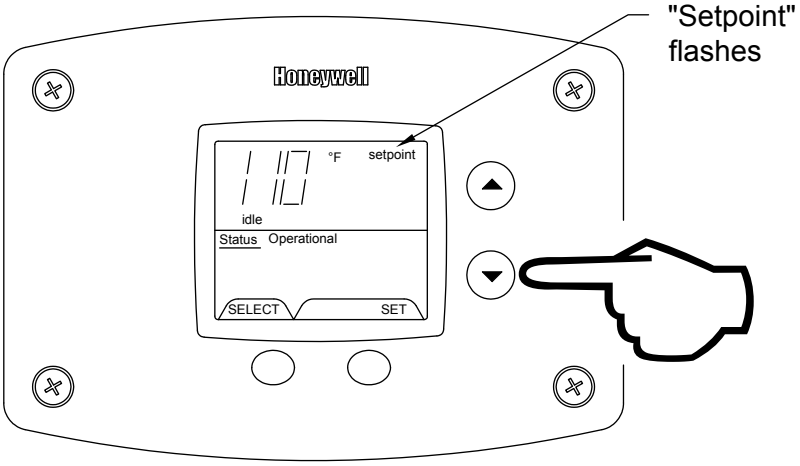

Step 2

Step 3: Press “SET” button for new setting to take effect immediately. The setpoint will stop flashing. If the “SET” button is not pressed, the new temperature setting will take effect in approximately 10 seconds.

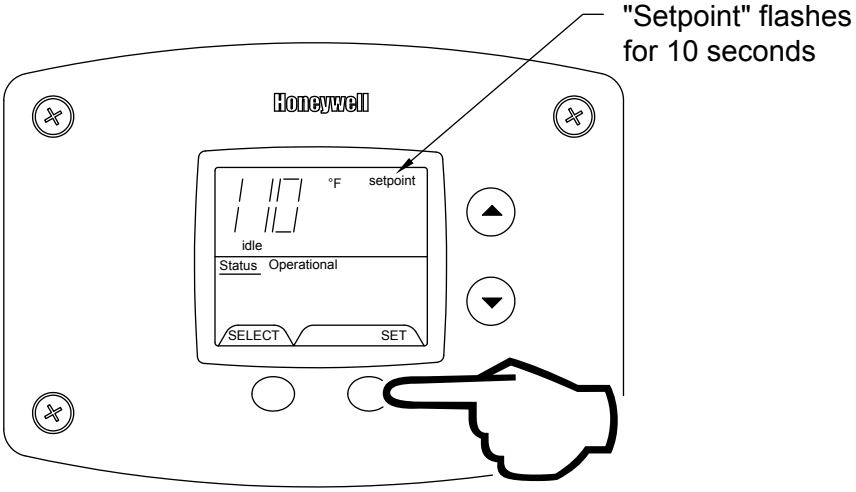

Step 3

Press SET for setting to take effect immediately

To Change Temperature Format in Display from °F to °C or ˚C to ˚F:

Step 1: Press “SELECT” button until °F/°C is displayed.

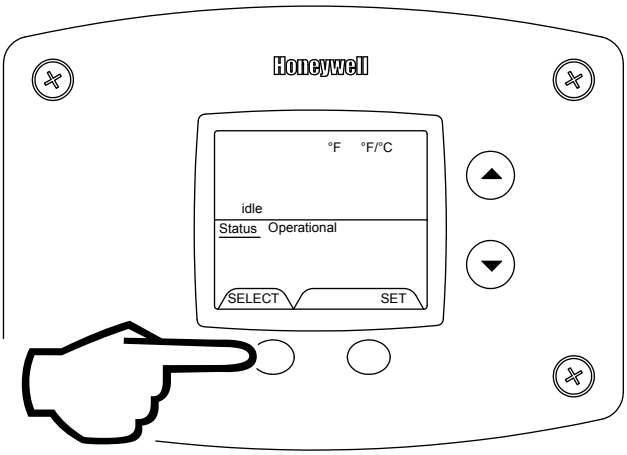

Press select Step 1

Step 2: Press “SET” button to change temperature format. Symbol °F/°C will flash.

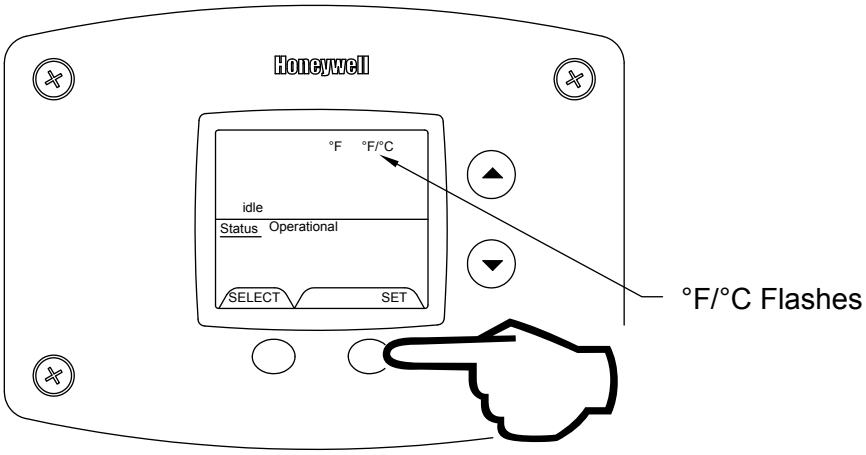

Step 2

Step 3a: Press “Temperature Up” button to change temperature format to °C.

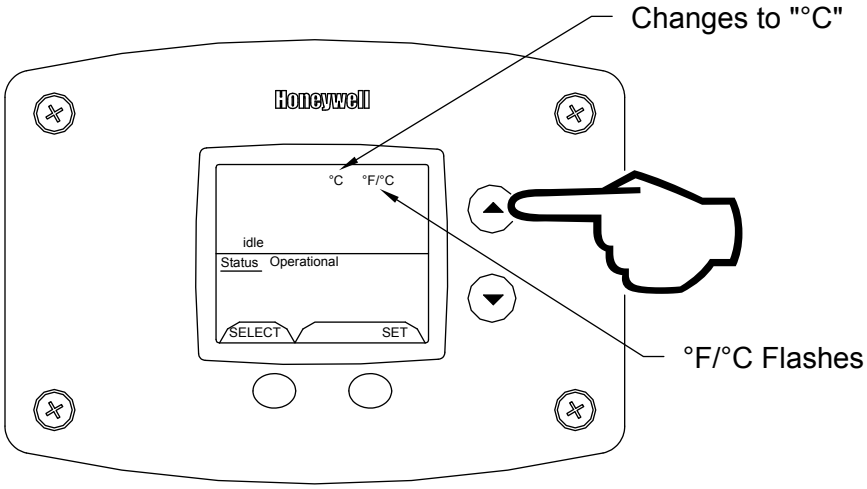

Step 3a

Step 3b: Press “Temperature Down” button to change temperature format to °F.

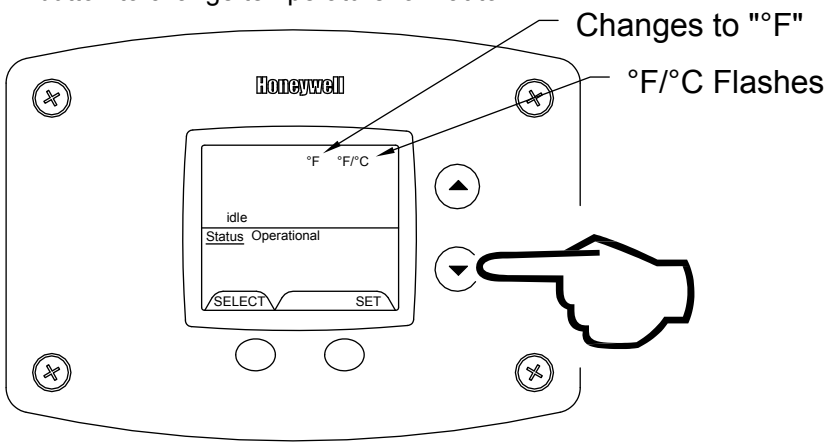

Step 4: Press “SET” button to confirm ˚F or ˚C format. °F/°C will stop flashing. Setpoint display will appear in the format selected (˚F or ˚C) in 10 seconds.

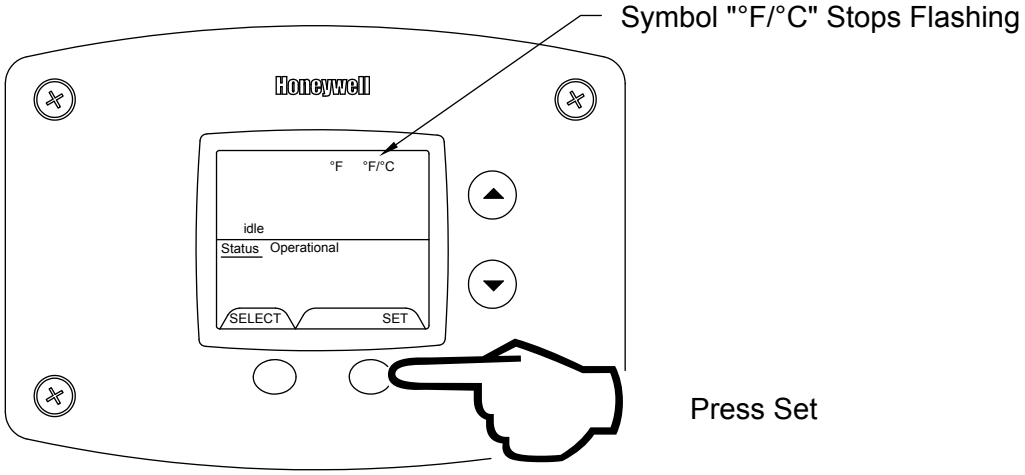

Step 4

Step 5: Pressing “SELECT” button will return display to setpoint in format selected (˚F or ˚C) immediately.

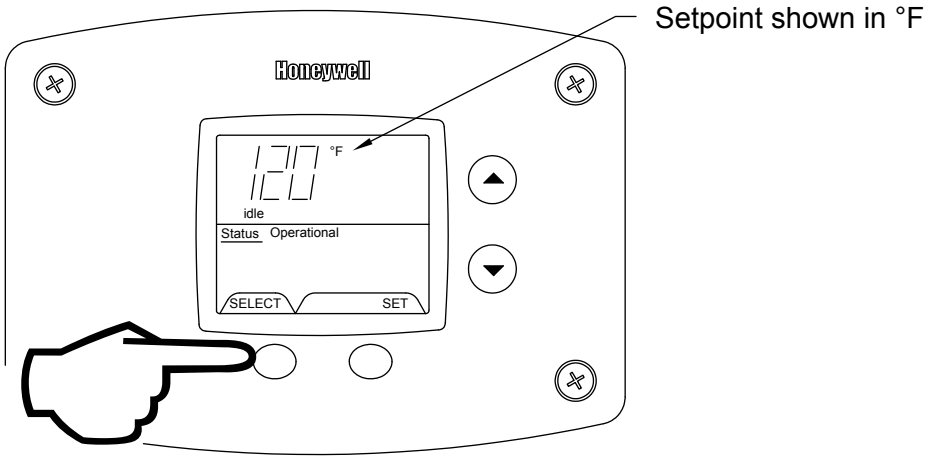

Press select

Step 5

An automatic gas shut-off device (ECO) is incorporated in the sensor and control board which will shut off all gas supply to the burner if the water heater temperature exceeds 200°F (*93°C*). Should the ECO function (open), the water temperature should be reduced to approximately 120°F (*49°C*) and call a qualified service agent to place the water heater in operation. The water heater must have the problem corrected by a qualified service person before putting the water heater back in operation. It is recommended that all service work be performed by a qualified service agency.

If the water heater is to remain idle for 30 days or more or is subjected to freezing temperatures while shut off, the water heater and piping should be fully drained (See "To Drain the Water Heater") and the drain valve should be left fully open.

⚠ WARNING

Hydrogen gas can be produced in an operating water heater that has not had water drawn from the tank for a long period of time (generally two weeks or more). Hydrogen gas is extremely flammable. To prevent the possibility of injury under these conditions, we recommend the hot water faucet to be open for several minutes at the kitchen sink before you use any electrical appliance which is connected to the hot water system. If hydrogen is present, there will be an unusual sound such as air escaping through the pipes as hot water begins to flow. Do not smoke or have open flame near the faucet at the time it is open.

SECTION X: MAINTENANCE

⚠ DANGER

DO NOT ATTEMPT TO REPAIR GAS VALVE.
DO NOT ATTEMPT TO REPAIR CONTROL BOARD.
DO NOT ATTEMPT TO REPAIR VENTURI.
DO NOT ATTEMPT TO REPAIR TRANSFORMER.
DO NOT ATTEMPT TO REPAIR PRESSURE SWITCH.

GENERAL

KEEP APPLIANCE AREA CLEAR AND FREE FROM COMBUSTIBLE MATERIALS, GASOLINE AND OTHER FLAMMABLE VAPORS AND LIQUIDS.

Water heater maintenance includes periodic tank flushing and cleaning, and removal of lime scale. The unit should be inspected and adjusted to maintain proper combustion. Refer to Table 5, "Suggested Maintenance Schedule". A periodic inspection of the venting system should be made.

BURNER FLAME CHECK

At the time of installation and at monthly intervals, a visual check of the burner flames should be made to determine if they are burning properly. The main burner may be seen through the sight glass window on the front of the combustion insert mounting bracket (Figure 27). The burner flames should be a blue flame near the burner surface in a uniform flame pattern. Occasional yellow or white streaks are normal.

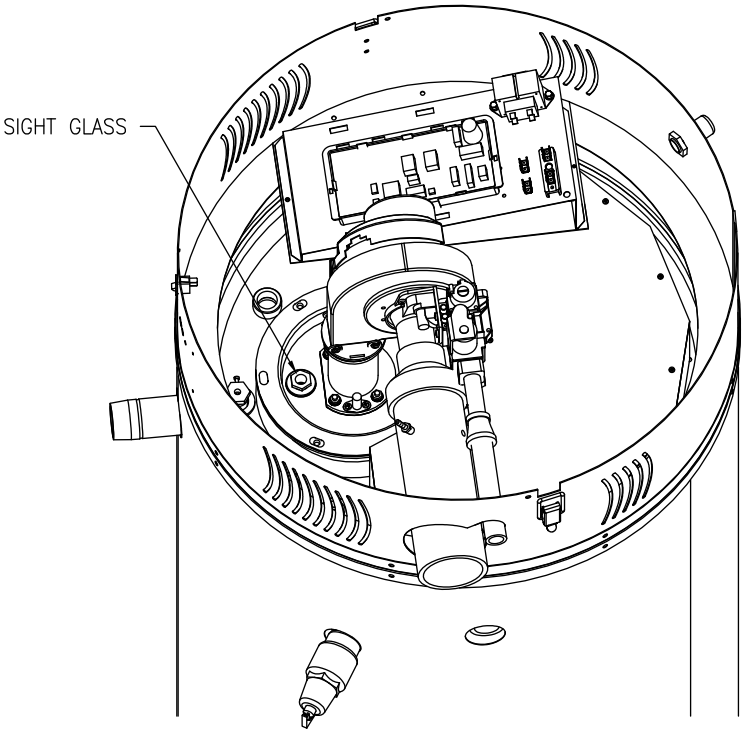

Figure 27. Sight Glass Location

MAINTENANCE SCHEDULE

⚠ WARNING

Water heaters are heat producing appliances. To avoid damage or injury there must be no materials stored against the water heater or vent-air intake system, and proper care must be taken to avoid unnecessary contact (especially by children) with the water heater and vent-air intake system. **UNDER NO CIRCUMSTANCES MUST FLAMMABLE MATERIALS, SUCH AS GASOLINE OR PAINT THINNER BE USED OR STORED IN THE VICINITY OF THIS WATER HEATER, VENT-AIR INTAKE SYSTEM OR IN ANY LOCATION FROM WHICH FUMES COULD REACH THE WATER HEATER OR VENT-AIR INTAKE SYSTEM.**

IMPORTANT

The water heater should be inspected at a minimum annually by a qualified service technician for damaged components and/or joints not sealed. DO NOT operate this water heater if any part is found damaged or if any joint is found not sealed.

Following are the instructions for performing some of the recommended maintenance. Unit inspection and adjustment should be performed by a competent technician.

Suggested Maintenance Schedule

COMPONENT	OPERATION	INTERVAL	REQUIRED
Tank	Sediment Removal	Monthly	Flushing
Anode Rods	Inspect	At least every 2 years	Replace as Required
Relief Valve	Check Operation	At least annually	Proper Operation
Ignition System	Inspect	Annually	Check for proper operation

Table 5.

FLUSHING WATER HEATER

1. Turn OFF the water heater electrical disconnect switch.
2. Open the drain valve and allow water to flow until it runs clean.
3. Close the drain valve when finished flushing.
4. Turn ON the water heater electrical disconnect switch.

DRAINING WATER HEATER

The water heater must be drained if it is to be shut down and exposed to freezing temperatures. Maintenance and service procedures may also require draining the water heater.

1. Turn off the water heater electrical disconnect switch.
2. Connect a hose to the drain valve.
3. Locate hose's discharge in an area where hot water will not cause any damage or injury.
4. Close the cold water inlet valve to water heater.
5. Open a nearby hot water faucet to vent the system.
6. Open the heater drain valve.
7. If the water heater is being drained for an extended shutdown, it is suggested the drain valve be left open during this period.

FILLING WATER HEATER

1. Close the water heater drain valve by turning the knob or valve stem clockwise. If alternative water connections are provided but not used, make certain they are plugged (i.e. rear connections).
2. Open the cold water supply shut-off valve.
3. Open several hot water faucets to allow air to escape from the system.
4. When a steady stream of water flows from the faucets, the water heater is filled. Close the faucets and check for water leaks at the water heater drain valve, combination temperature and pressure relief valve and the hot and cold water connections.

SEDIMENT AND LIME SCALE REMOVAL

Waterborne impurities consist of the particles of soil and sand, which settle out and form a layer of sediment on the bottom of the tank.

The amount of calcium carbonate (lime) released from water is in direct proportion to water temperature and usage. The higher the water temperature or water usage, the more lime deposits are dropped out of the water. This is the lime scale, which forms in pipes, water heaters and on cooking utensils.

Lime accumulation not only reduces the life of the equipment but also reduces efficiency of the water heater and increases fuel consumption.

The usage of water softening equipment greatly reduces the hardness of the water. However, this equipment does not always remove all of the hardness (lime). For this reason it is recommended that a regular schedule of deliming be maintained.

The depth of the buildup should be measured periodically. Water heaters will have about 3 inches *(7.6 cm)* of lime buildup when the level of lime has reached the bottom of the cleanout opening or about 1 inch *(2.5 cm)* of lime buildup if it has reached the drain valve opening. A schedule for deliming should be set up, based on the amount of time it would take for a ½ inch *(1.3 cm)* buildup of lime.

Example 1: Initial inspection shows ½ inch *(1.3 cm)* of lime accumulation. Therefore, the water heater can be delimed once a year.

To remove sediment and lime scale:

1. Drain the heater. Refer to DRAINING THE WATER instructions in this section.
2. Remove outer cover plate from lower side of water heater jacket.
3. Remove cover and gasket from cleanout opening.
4. Remove lime, scale or sediment using care not to damage the glass-lining.
5. Inspect cleanout plate gasket: Replace gasket if necessary (Contact Bradford White Local Distributor for correct part number).
6. Install gasket and cleanout plate. Be sure to draw plate up tight by tightening screws securely.
7. Close the drain valve. Open a hot water fixture to allow air to escape. Open the cold water supply to water heater and allow the tank to fill. Follow the lighting instructions.
8. Check for water leakage.
9. Install outer jacket cover plate.

ANODE INSPECTION AND REPLACEMENT

This water heater is equipped with multiple sacrificial anodes to extend tank life. The anode rod should be inspected periodically (every 2 years) and replaced when necessary to prolong tank life. Water conditions in your area will influence the time interval for inspection and replacement of the anode rods. Consult the plumbing professional who installed the water heater or the manufacturer listed on the rating plate for anode replacement information. The use of a water softener may increase the speed of anode consumption. More frequent inspection of the anode is needed when using softened (or phosphate treated) water.

To inspect or replace an anode:

The anodes on this water heater are easily accessible from the top of the water heater making replacement simple and quick. Use the following procedure to remove and inspect the anodes.

1. Drain the heater. Refer to DRAINING THE WATER HEATER instructions in this section.
2. Flush the heater. Refer to FLUSHING THE WATER HEATER instructions in this section.
3. Remove the combustion surround top by unlatching.
4. Remove the second pass access cover (if equipped).
5. Remove the second pass insulation.
6. Remove the second pass collector cover.
7. Remove the anode using a socket of the appropriate size. Sometimes a breaker bar <u>will need to be used</u>. Do not use an impact wrench.
8. Inspect and replace the anode as required. Use pipe tape or sealant when reinstalling the anode.
9. Close the drain valve. Open a hot water fixture to allow air to escape. Open the cold water supply to water heater and allow the tank to fill.
10. Check your anode and drain valve for leaks.
11. Replace second pass collector cover. Make sure to clean off any sealant and reseal before fastening.
12. Replace second pass insulation.
13. Replace second pass access cover.
14. Replace combustion surround top and latch it securely in place.
15. Follow the lighting instructions.

DRAIN VALVE AND TANK ACCESS PANEL

The water heaters are equipped with a ¾ inch *(1.9 cm)* drain valve.
An access panel covers the cleanout opening in the tank, which is sealed by a gasket and cover.

RELIEF VALVE

At least once a year, check the combination temperature and pressure relief valve to insure that the valve has not become encrusted with lime. Lift the lever at the top of the valve several times until the valve seats properly without leaking and operates freely.

⚠ CAUTION

Before manually operating the valve, make sure that a drain line has been attached to the valve to direct the discharge to an open drain. Failure to take this precaution could mean contact with extremely hot water passing out the valve during this checking operation.

If the combination temperature and pressure relief valve on the water heater discharges periodically, this may be due to thermal expansion in a closed water supply system. Contact the water supplier or local plumbing inspector on how to correct this situation. **Do not plug the combination temperature and pressure relief valve outlet.**

⚠ WARNING

Above all, do not plug the temperature and pressure relief valve. This is not a solution and can create a hazardous situation.

VENT AND AIR INTAKE SYSTEM

Examine the vent and air intake system at least annually. Points of inspection are as follows:

1. Check for obstructions and/or deterioration of vent piping and vent terminal. Replace immediately where needed.
2. Vent pipe and vent terminal screen should be cleaned of any foreign material. The screen is located inside the vent terminal outlet and is accessible from the outside of the vent terminal elbow. Do not reach inside the vent terminal when the water heater is in operation.
3. Check all venting system connections for leakage and reseal as required.

COMBUSTION SYSTEM INSPECTION

Inspect the operation of the combustion system annually. Use the following procedure to inspect the combustion system.

1. Adjust the thermostat to the Min. setting.
2. Turn off the main power switch of the water heater.
3. Remove the top of the combustion surround by unlatching it.
4. While observing the water heater display, turn on the main power switch.
5. Adjust thermostat to the Max. setting.
6. Watch the water heater display status indicator as the control goes through the sequence of operation as previously described.
7. Upon ignition, observe the main burner flame.
8. Readjust thermostat to previous setting.
9. Replace combustion surround top and latch it securely in place.

SECTION XI: DIAGNOSTIC AND TROUBLESHOOTING GUIDE

DIRECT SPARK HONEYWELL INTEGRATED CONTROL SYSTEM
SEQUENCE OF OPERATION

1. When the tank temperature drops below the temperature setpoint on the display, the control sends power to the combustion blower for a 30 second pre-purge period.

2. At the end of the pre-purge period, the control sends high voltage through the spark cable to the spark rod to spark to the burner. The gas valve also opens. If the burner lights, a microamp current is generated through the flame sense rod allowing the control to detect burner flame. The sparking then ceases and the flame is monitored by the flame sense circuit until the tank temperature reaches the thermostat setpoint and turns off the gas valve.

3. If the burner fails to light, the gas valve closes, sparking to the burner stops, and the combustion blower continues to operate for 60 seconds to purge the heat exchanger of unburned gas. The ignition trial is repeated. The control will make 3 attempts to ignite the burner. If the burner fails to light after the third attempt, the control enters “Soft Lockout”, which is an idle period for 60 minutes. There will be an error code 62 or 63 shown on the water heater display indicating that the control cycled through the maximum number of ignition retries for ignition. The control will make another 3 ignition attempts after the 1 hour waiting period.

4. If the exhaust vent terminal should become blocked or the condensate drain becomes plugged, the exhaust vent pressure switch will open and the gas valve closes. The combustion blower will continue to operate. An error code 29 is shown on the water heater display. Removing the blockage will resume normal operation.

5. The burner flame is monitored by the flame sense circuit and if the flame should extinguish, the gas valve closes and the combustion blower will operate to purge the heat exchanger before making an attempt to relight the burner. There may be 3 attempts to relight the burner before going into the Soft Lockout period explained previously.

6. The burner will continue to operate during the heating cycle until the tank temperature reaches the setpoint. The gas valve opens and the combustion blower continues to operate for 30 seconds to purge the heat exchanger of flue gases.

7. If for some reason, the tank temperature should exceed 200°F (*93°C*), then the control closes the gas valve and goes into a “Hard Lockout” state and will not operate until reset by a qualified service person. The display will read error code “65”, which indicates the tank high limit temperature has been exceeded. No attempt should be made to reset the control until a service person has corrected the cause of the high limit condition. Refer to the diagnostic service section at the end of this Installation and Operating Instruction Manual.

ACCESSING SERVICE MODE ON THE WATER HEATER DISPLAY (FOR SERVICE PERSONNEL ONLY)

The display has a “Service Mode” for changing the maximum setpoint and accessing information in aiding servicing of the water heater. This procedure is for service and installation personnel only. To enter the Service Mode, follow the steps illustrated below:

⚠ WARNING

The following procedure is for service and installation personnel only. Resetting lockout conditions without correcting the malfunction can result in a hazardous condition.

Step 1: Press “Select” and “Temperature Up” buttons together and hold for 3 seconds until “Max Setpoint” is shown in the display.

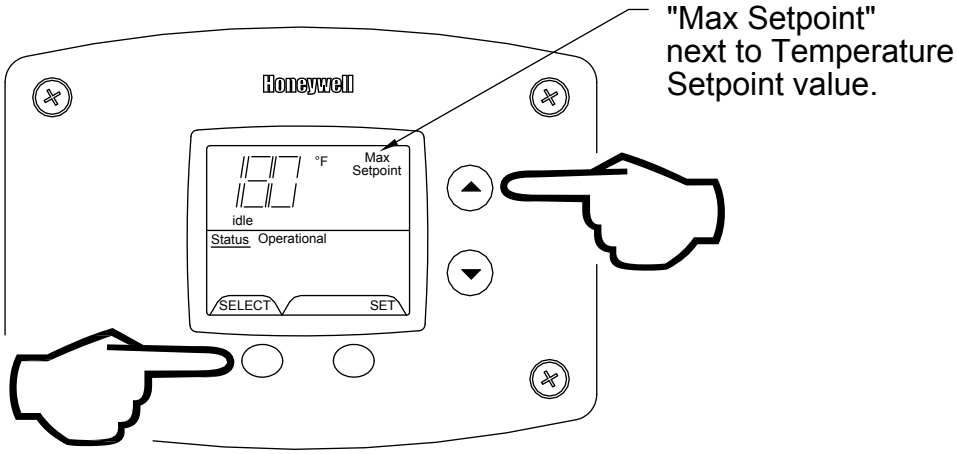

NOTICE

30 Seconds after the last button press, the display will automatically return to the “User Mode”. Simultaneously pressing the “Select” and “Temperature Up” buttons will switch the display immediately to the “User Mode”.

Step 2: Pressing “Select” button will change display to next mode

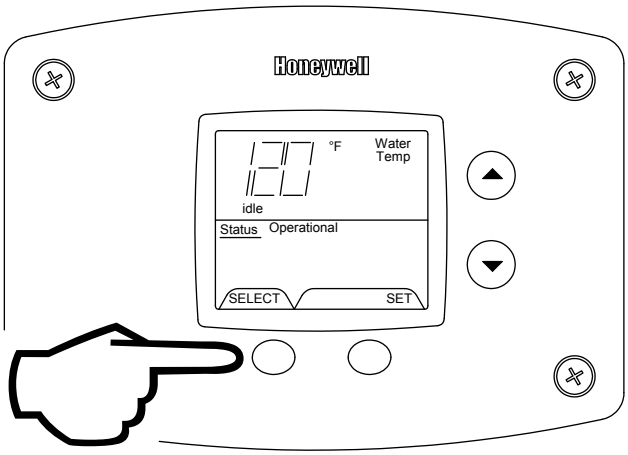

The following is the sequence of modes available in "Service Mode" by pressing the "Select" button:

Error Code Number (Display/Reset). This is only shown if there is an operating error in the "User Mode".

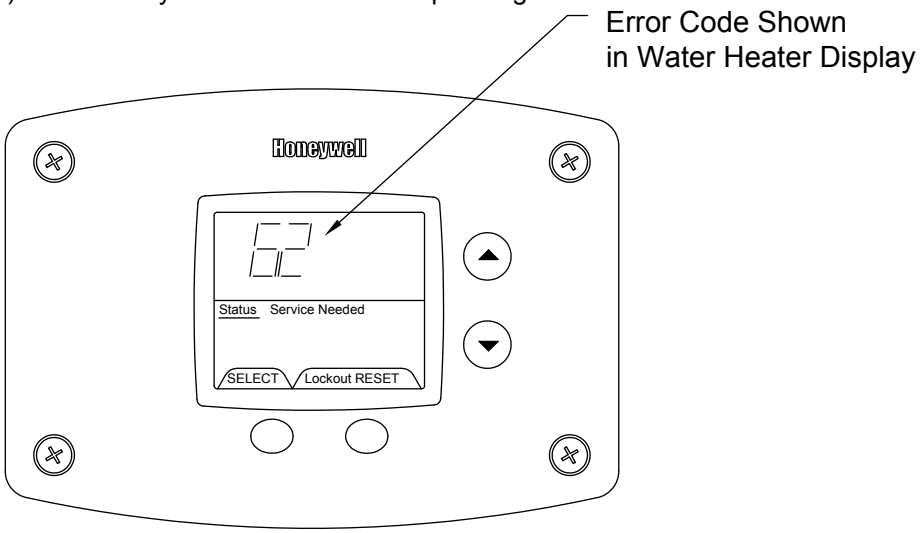

1. Max Setpoint (Display/Change)

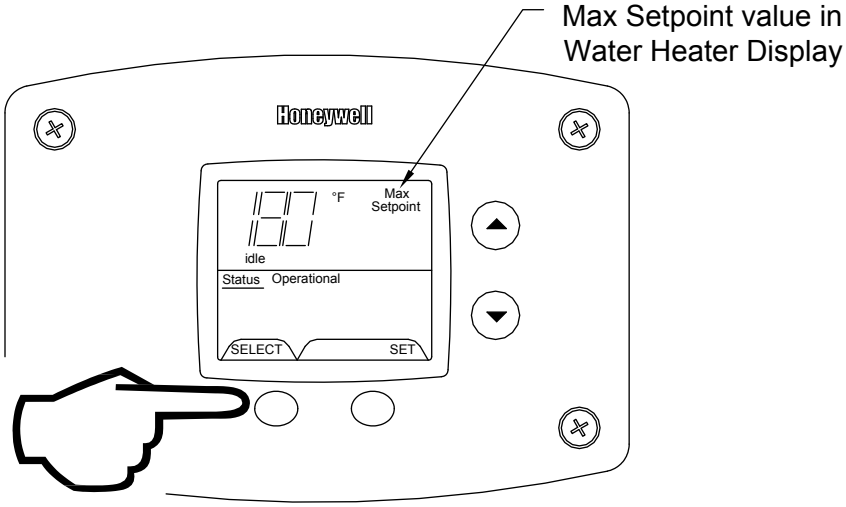

2. Water Temperature Sensor Reading.

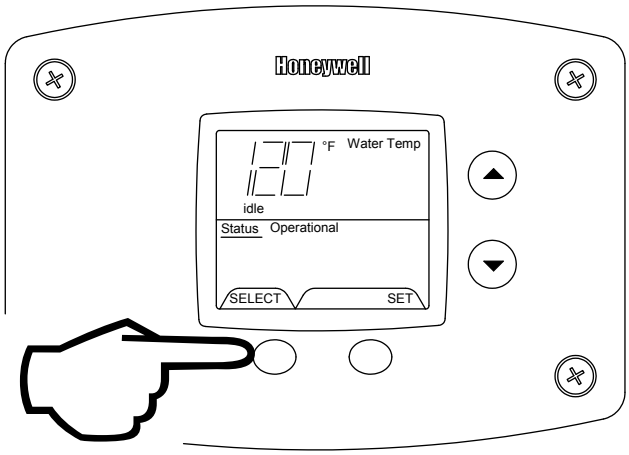

3. Flame Current of Pilot Flame Sensor (Displays only in the Heating Cycle)

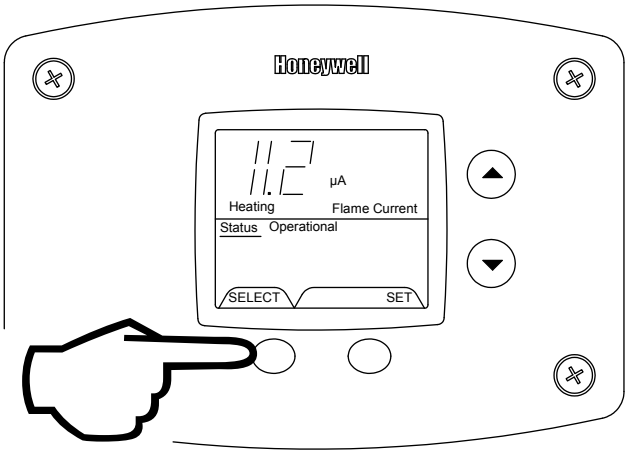

4. Setpoint (Display/Change)

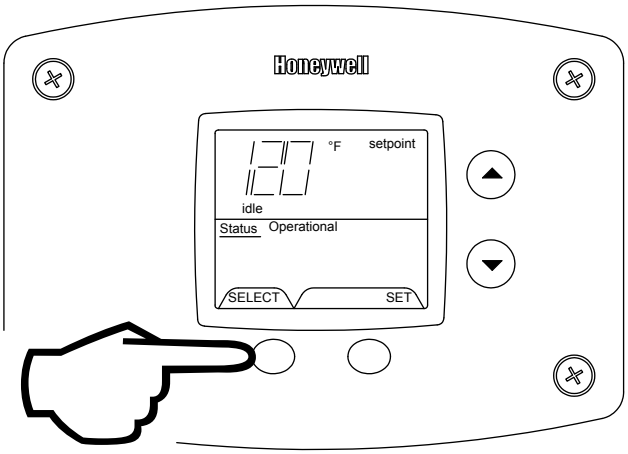

5. ˚F/˚C (Display/Change)

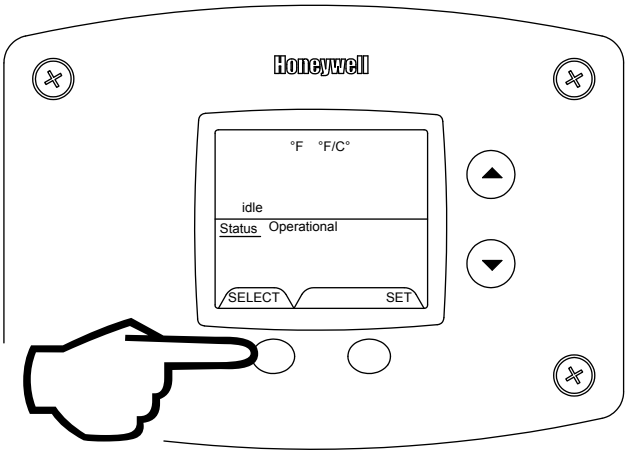

6. Differential (Display only – shows the differential of the thermostat)

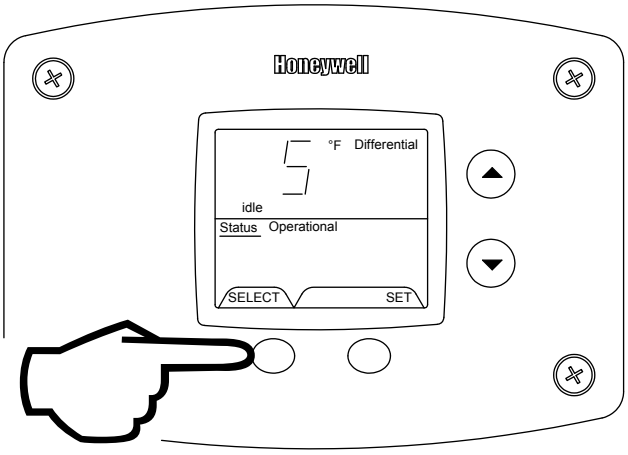

7. Software Version (Display only)

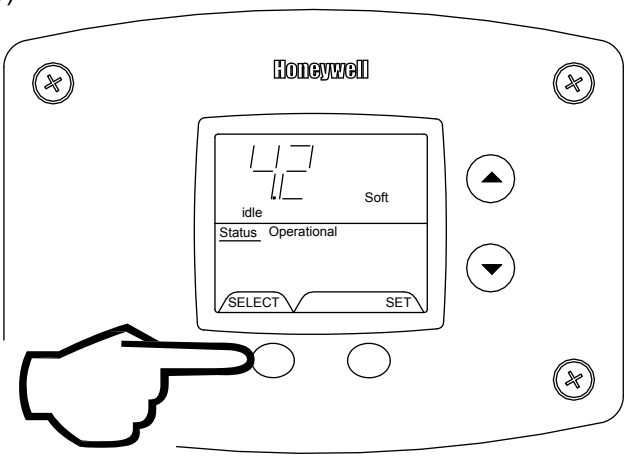

8. Error Code History (Displays if there are present error codes or up to 10 previous error codes). Water Heater Display will show -- if there are no error codes.

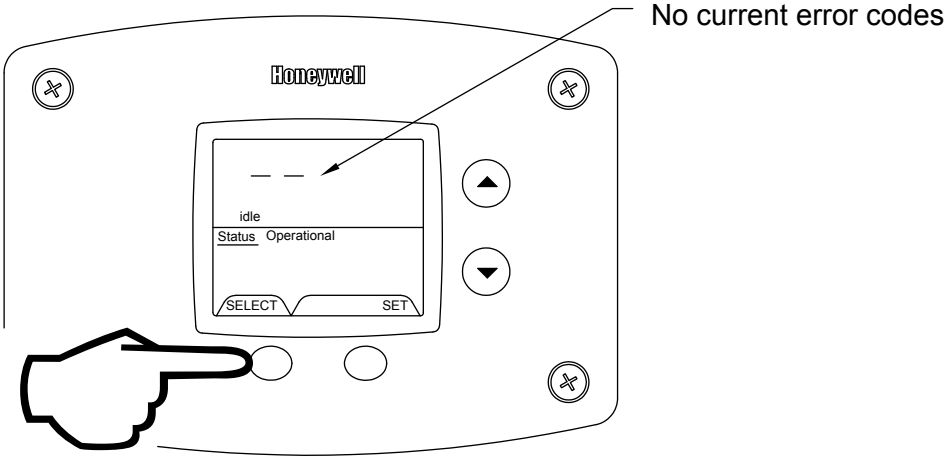

To change the Maximum Setpoint Limit (Max Setpoint) for the temperature setpoint:

⚠ WARNING

Setting the water temperature to the maximum set point can result in scalding hot water delivered to the faucets. It is highly recommended that the maximum setpoint be adjusted to the lowest temperature possible for the needs of the installation. See following section to change the maximum setpoint limit (max setpoint). Make sure the water heater control display is not in a public area that can result in the temperature settings being improperly adjusted. See previous warning on scalds and an ASSE approved mixing valve.

Step 1: In service mode press the “Select” button until “Max Setpoint” is displayed.

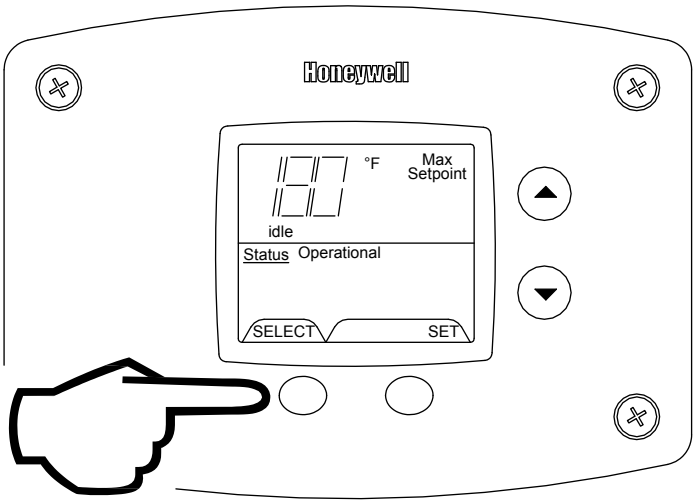

Step 2: Press “Set” button to enter setting mode. “Max Setpoint” will flash to indicate setting mode.

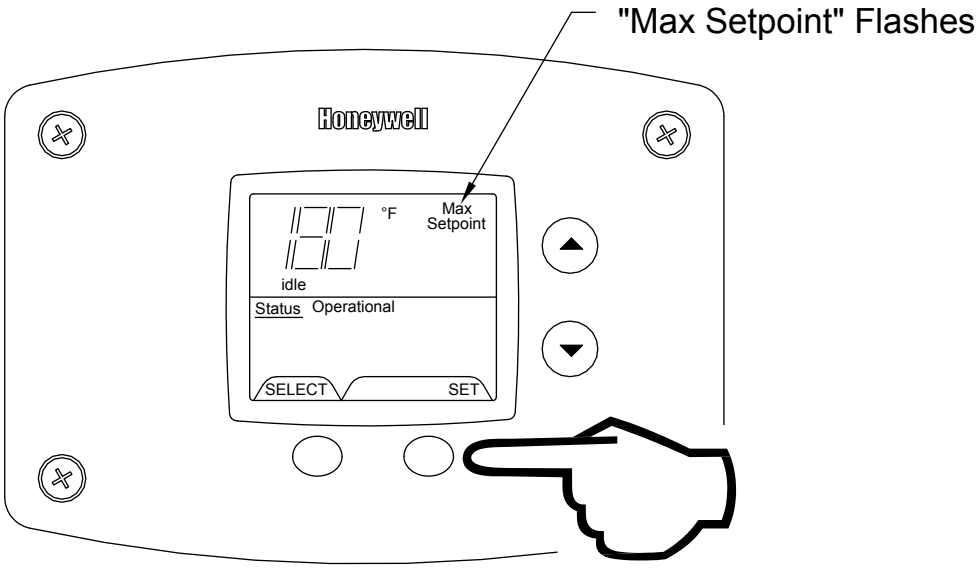

Step 3: Press the “UP” or “DOWN” buttons to change the maximum setpoint value. This will limit the maximum setpoint the user can select. Note: The maximum setpoint is approximately 180˚F *(82˚C)*.

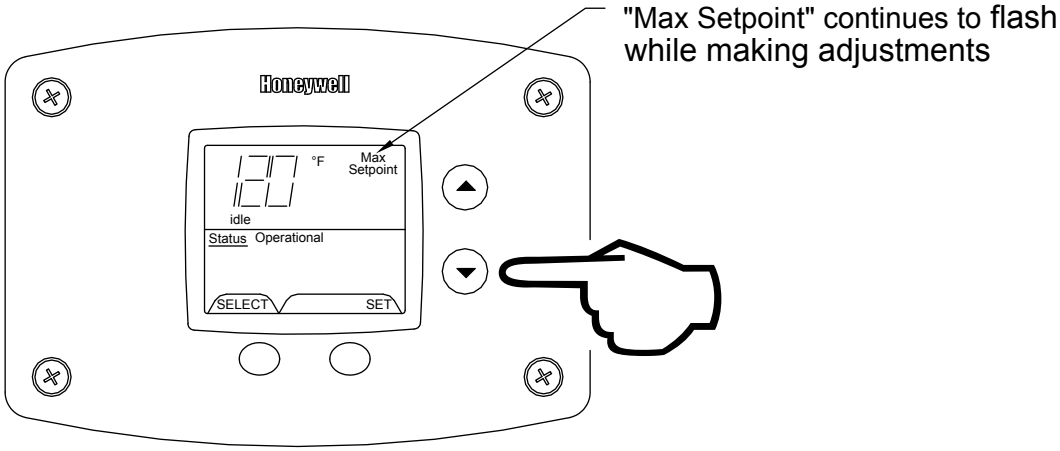

Step 4: Press “Set” button to confirm new “Max Setpoint” value and stop setting mode.

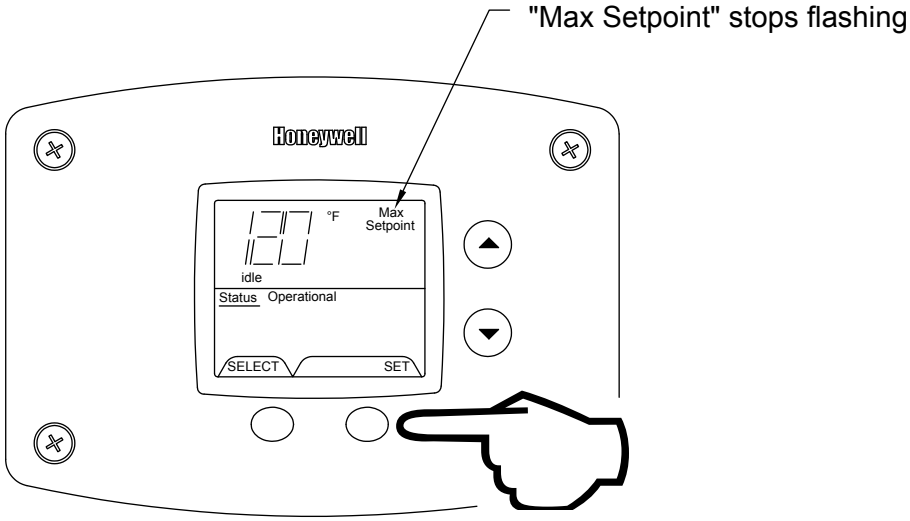

Step 5: 30 Seconds after the last button press, the Water Heater Display will go back to “User Mode”. It will read “Max Setpoint” without showing a temperature value if the temperature setpoint is at the maximum setting. The Water Heater Display can be set back to the “User Mode” immediately by pressing both the “Temperature Up” and “Select” buttons together for 3 seconds.

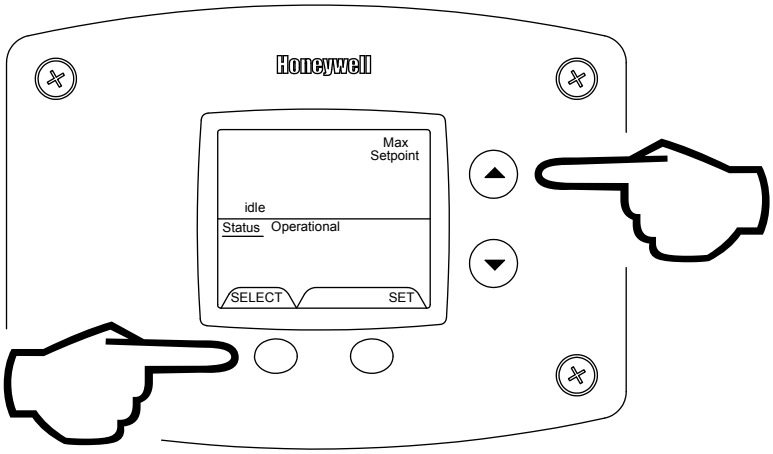

Exiting Service Mode

Display of Water Temperature:

Step 1: In Service Mode, Press the “Select” button until “Water Temp” is displayed in the upper right section of the water heater display. This is the reading for the tank sensor.

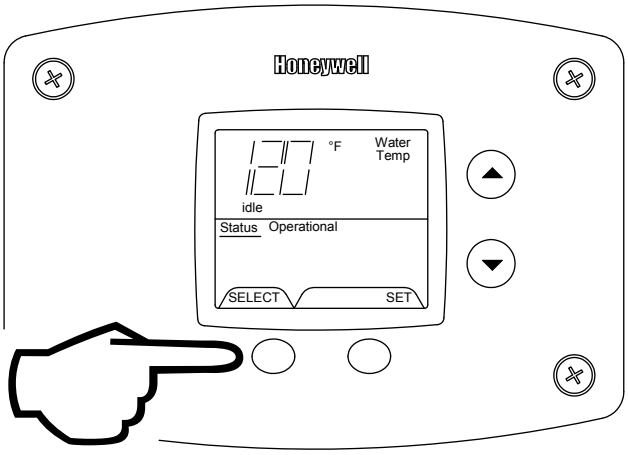

To Display Flame Sense Current of the Pilot Flame Sensor:

The pilot flame sense current is available only when the burners are in operation. Step 1: Make sure the status displays “Heating” or draw enough hot water to start the burners. Step 2: Enter the “Service Mode” described previously. Step 3: Press the “Select” button until a number value is displayed with “Flame Current” to the right of the number. The value displayed is in microamps (µA).

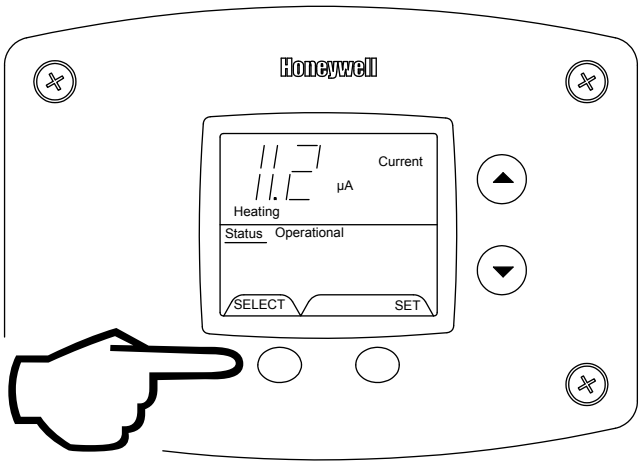

To Display and Change Temperature Setpoint:

Step 1: In “Service Mode” press the “Select” button until “Setpoint” is shown in the water heater display.

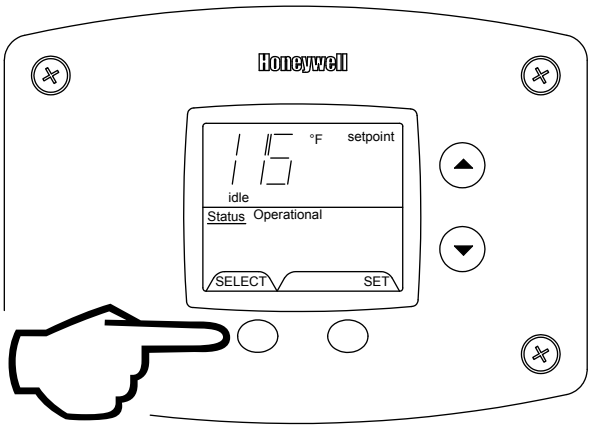

Step 2: Press the “Set” button to enter the setting mode. “Setpoint” will flash in the water heater display.

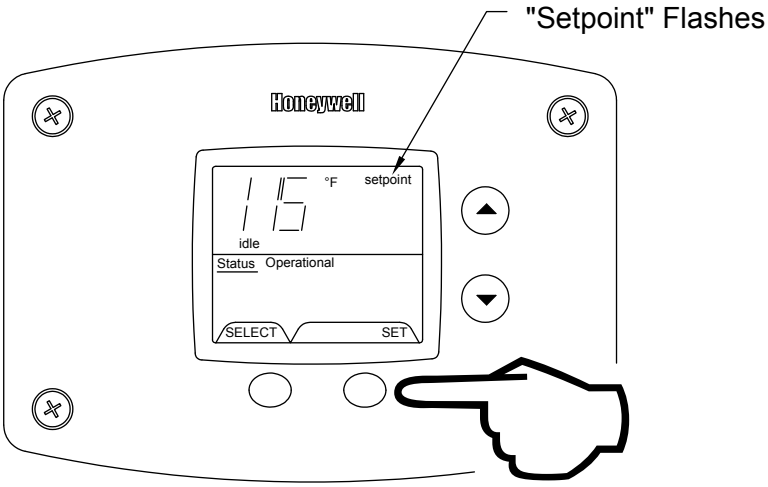

NOTICE
Note: The maximum temperature that can be set in the Water Heater Display is limited to the “Max Setpoint” described previously. To change the “Max Setpoint”, refer to the procedure “To Change the Maximum Setpoint Limit…” described previously under “Accessing the Service Mode on the Water Heater Display”.

Step 3: To raise the temperature setpoint, press the “Temperature Up” button until the desired temperature is shown on the water heater display.

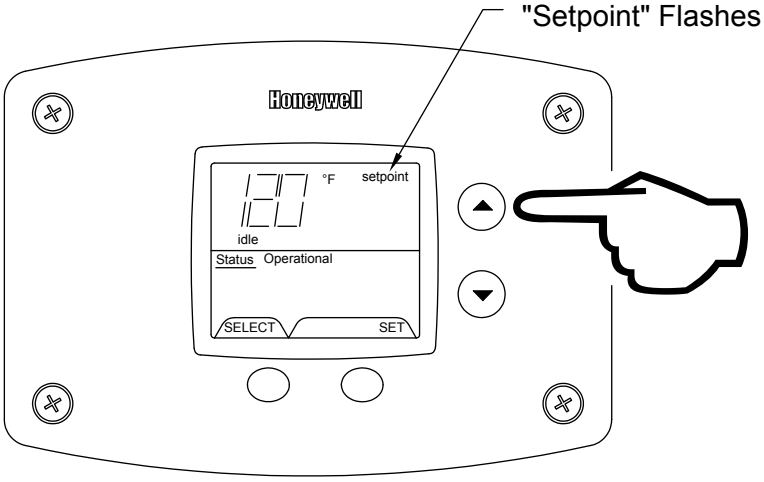

Step 4: To lower the temperature setpoint, press the “Temperature Down” button until the desired temperature is shown on the water heater display.

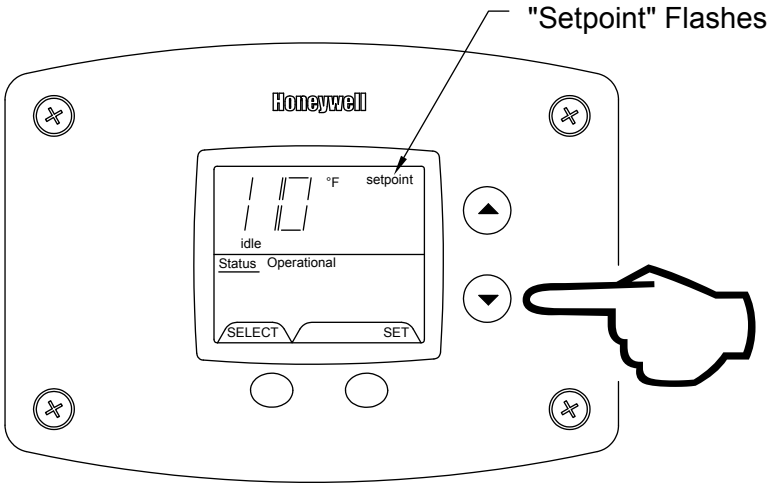

Step 5: When the desired setpoint is reached on the water heater display, press the “Set” button to confirm the new setpoint. “Setpoint” stops flashing in the water heater display.

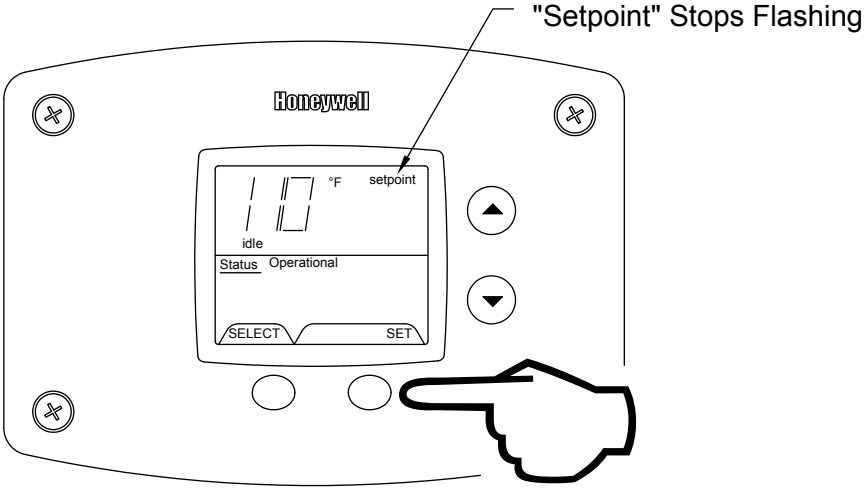

To Display and Change Temperature Format (˚F/˚C):

To Change Temperature Format in Display from ˚F to ˚C or ˚C to ˚F:

Step 1: While in “Service Mode”, press “Select” button until “˚F/˚C” is shown in the upper right portion of the water heater display.

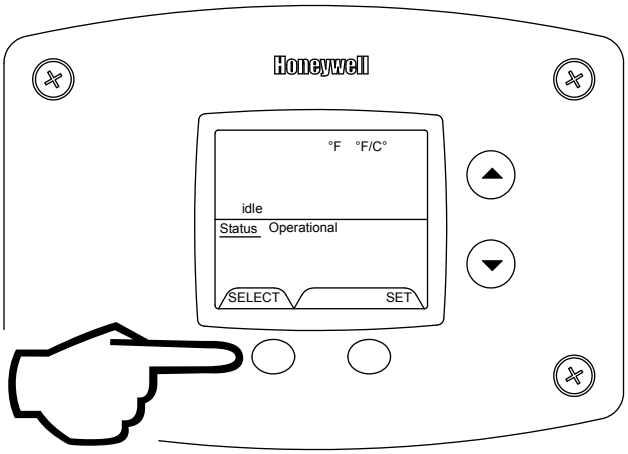

Step 2: Press “Set” button to change temperature format. “˚F/˚C” symbol will flash in the water heater display.

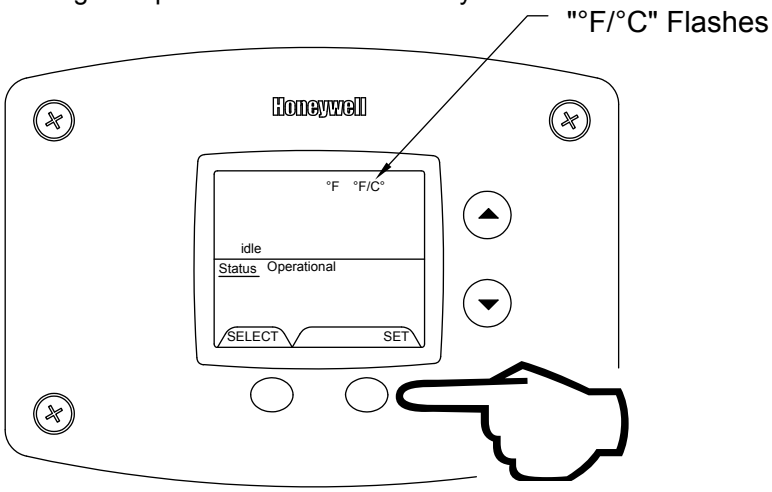

Step 3a: Press “Temperature Up” button to change temperature format to ˚C.

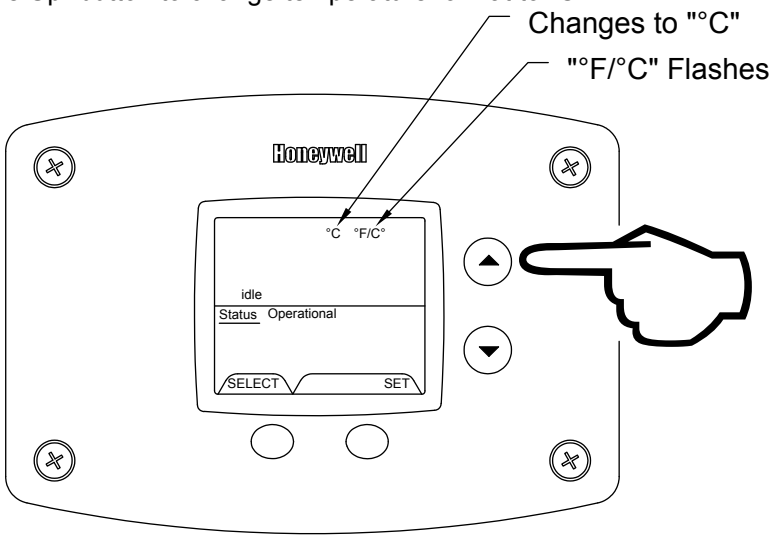

Step 3b: Press “Temperature Down” button to change temperature format to ˚F.

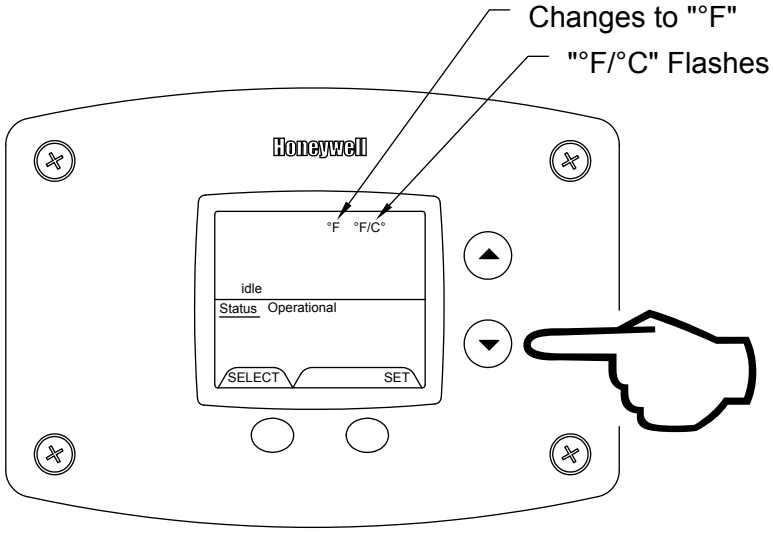

Step 4: Press “Set” button to confirm ˚F or ˚C format. ˚F/˚C will stop flashing.

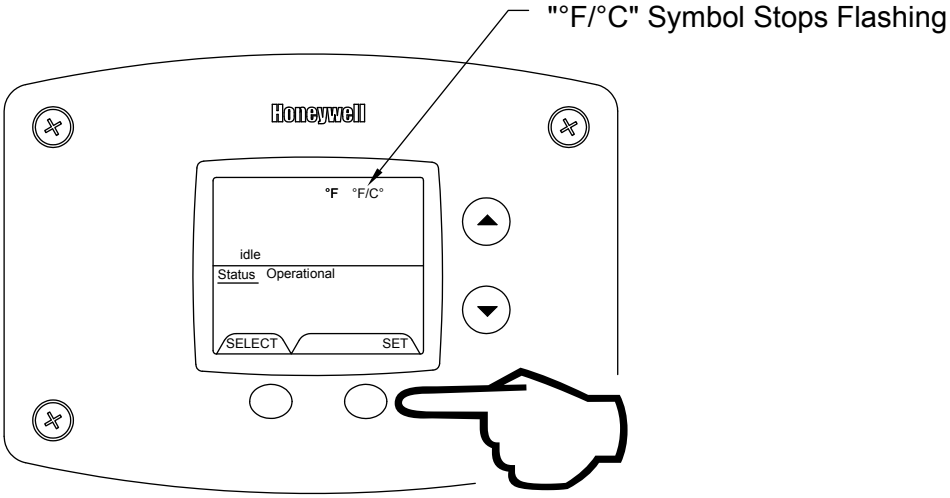

Step 5: Pressing “Select” button will return display to setpoint in format selected (˚F or ˚C) immediately.

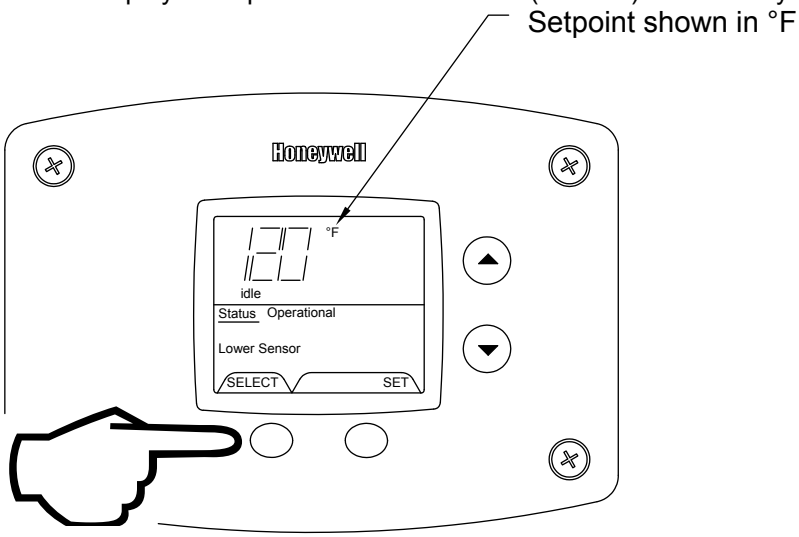

How to reset the control from Lockout Conditions:

⚠ WARNING

The following procedure is for service and installation personnel only. Resetting lockout conditions without correcting the malfunction can result in a hazardous condition.

If an error code is displayed (except for #4, low flame sense current), the water heater will be in a “lockout condition” with the water heater display showing the error code number and “Service Needed” in the status section of the display window. Error codes 62 (maximum number of retries detected) and 63 (maximum number if ignition recycles detected) are “Soft Lockouts” in which the control can be reset in the “User Mode” by pressing the lower right button under “Lockout Reset” shown in the lower right portion of the display. The control will also go through 3 attempts to relight the burners every hour in the soft lockout condition.

Resetting Error Codes in Soft Lockout Condition

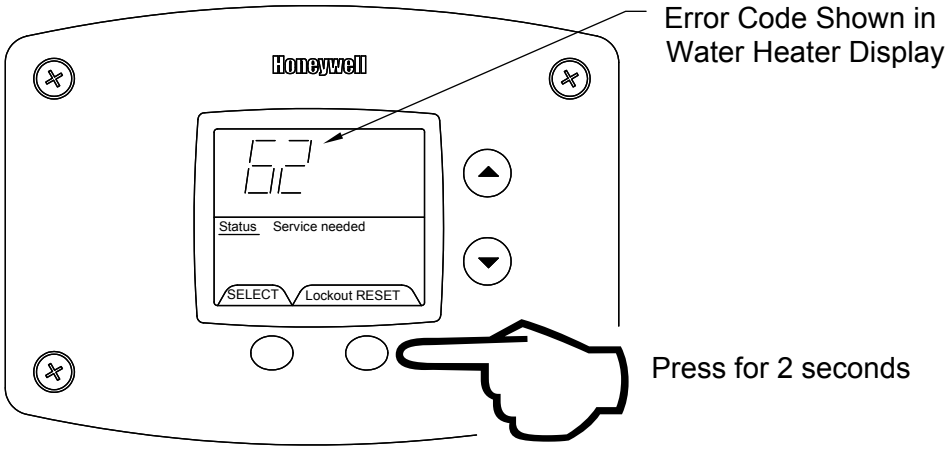

All other error codes will put the water heater into a “Hard Lockout” condition, in which the water heater will not operate and cannot be reset in the “User Mode”. To reset a hard lockout, first enter the “Service Mode” described earlier by pressing both the “Temperature Up” and “Select Buttons” at the same time for 3 seconds. Then press the lower right button under “Lockout Reset” in the water heater display and hold for 3 seconds.

Resetting Error Codes in Hard Lockout Condition

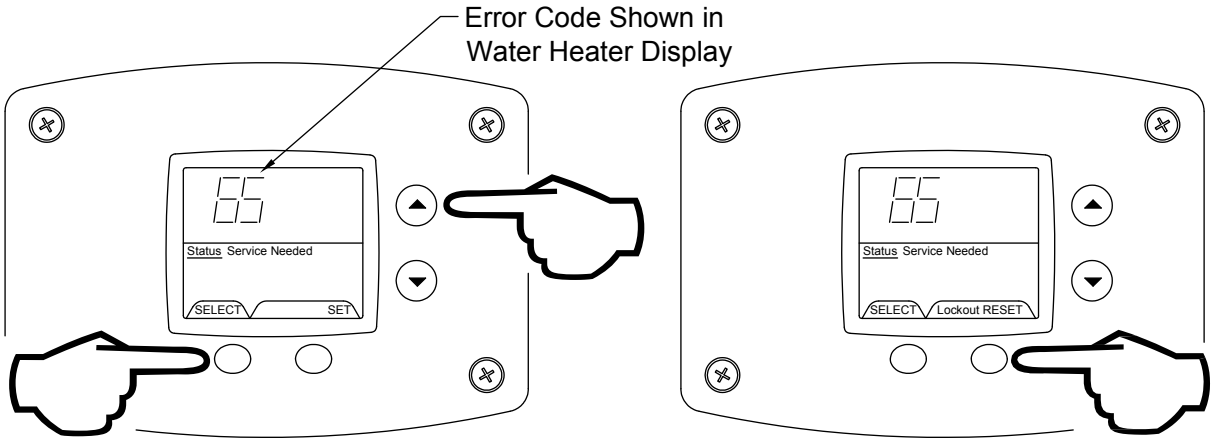

Step 1: Press for 3 seconds to enter service mode.

Step 2: Press for 3 seconds to reset control in service mode.

Error Codes and Error History Display:

If there is an operating problem with the water heater, an error code number will appear on the water heater display with “Service Needed” to the right of the “Status” indicator. The error code label is located below the water heater display and the following section in this Installation and Operating Instruction Manual explains the error codes with corrective actions to repair the water heater.

Example of Error Code in the Display:

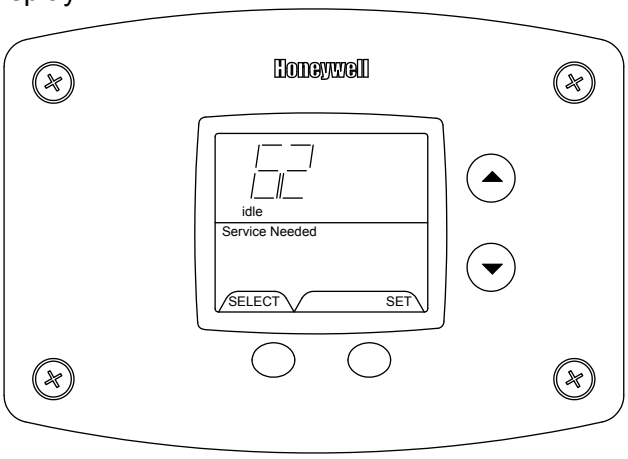

Error Code History:

In “Service Mode” pressing the “Select” button after the “Software Version” (item 8 in the previously described sequence of service modes) will show an error code history, if there have been any previous operating problems with the water heater. If the display shows --, there is not a current error code.
The Water Heater Display will provide up to 10 previous error codes. The oldest error code will be stored in code index #1 and the most recent in code index #10 (if there are 10 error codes).

To view previous error codes:

Step 1:
In “Service Mode” press the “Select” button until the next display after the “Software Version”. If there are no current error codes, the display will show -- .

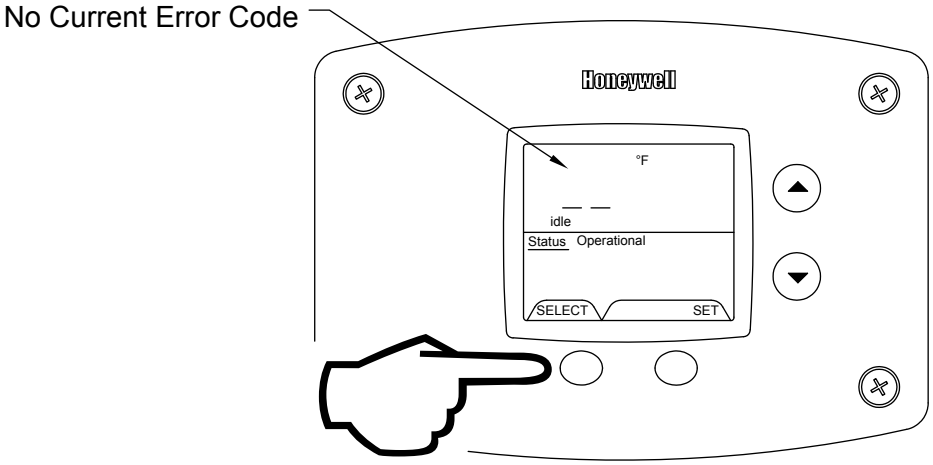

Step 2:
Press the “Temperature Down” button to select the error code index, starting with the most recent error code “10”.

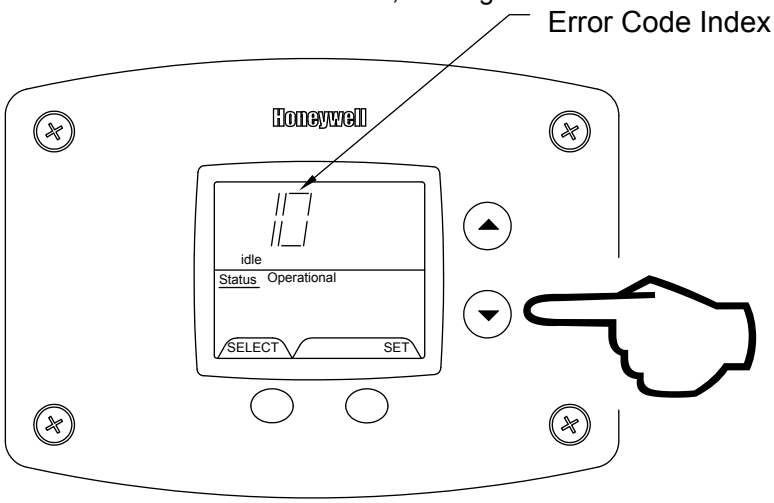

Step 3:
Press the “Select” button to view the error code for “code 10”. If there is a number displayed, note what the number is. The label next to the water heater display will identify the code number. If no number is displayed with only a “--” in the water heater display, then there has not been an error code for error code index 10.

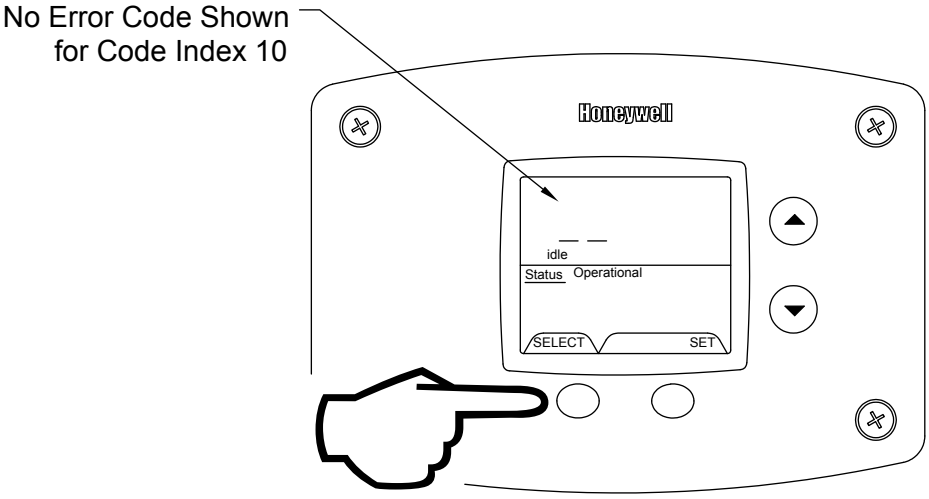

Step 4:
Press the “Temperature Down” button to change to the previous code index, code #9.

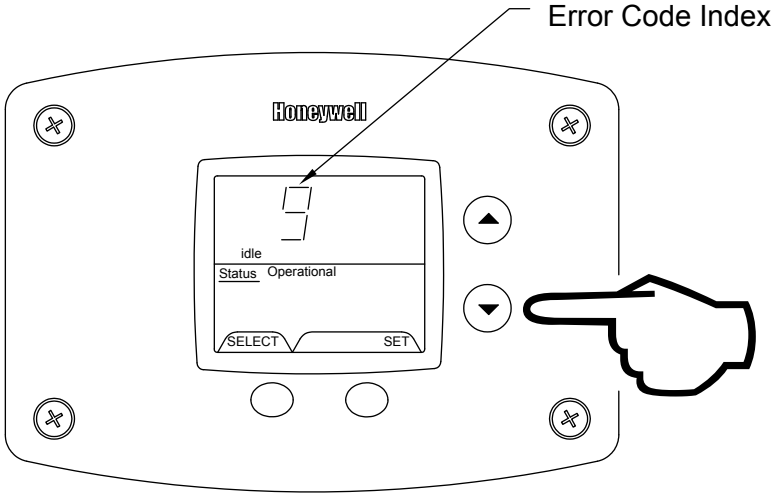

Step 5:
Press the “Select” button for code index #9 to view if there are any code numbers.

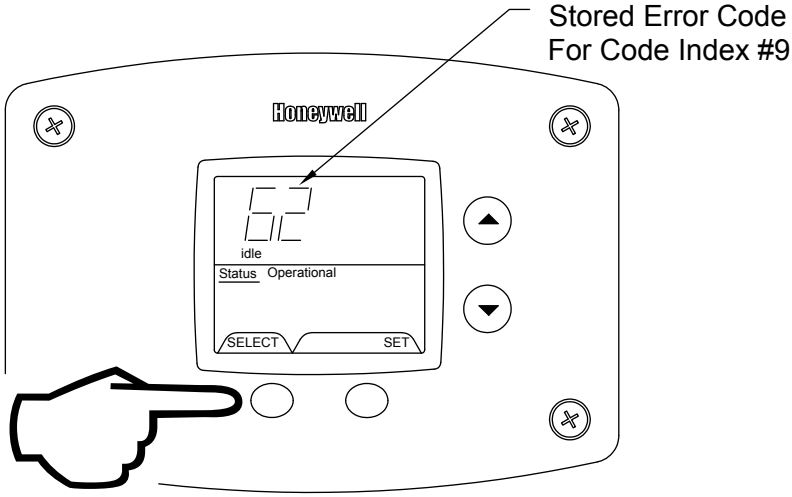

Step 6: Continue pressing the “Temperature Down” button to change to the next error code index and press “Select” to view the error code number, if any, for that index number. Continue on to index #1, the oldest error code index. The water heater display will store up to 10 error codes with the oldest code starting in code index #1 with the most recent code in code index #10.

Step 7: 10 seconds after the last button press, the Water Heater Display will revert back to the current error code display. To exit Service Mode, either wait 30 seconds or press Temperature Up button and Select Button for 3 seconds.

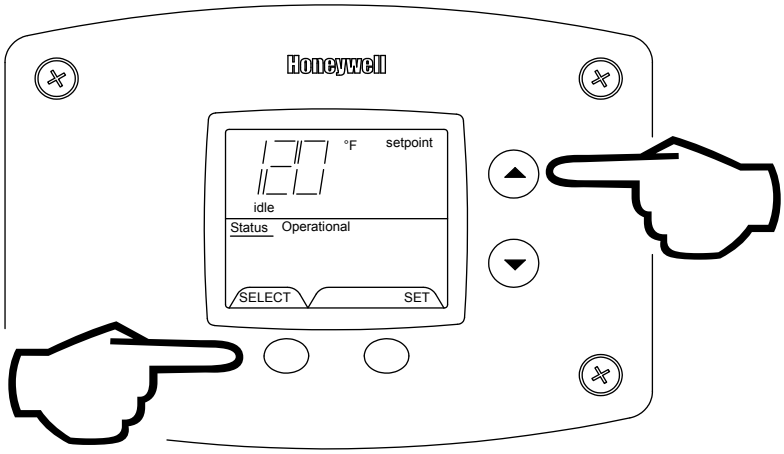

Exiting Service Mode

DIAGNOSTIC ERROR CODES AND TROUBLESHOOTING PROCEDURES FOR EF MODELS WITH HONEYWELL INTEGRATED DIRECT SPARK IGNITON CONTROL SYSTEM

Error Code	Definition of Code	Cause of Problem and Actions Taken to Correct
No code – blank display		Check power supply to the water heater. Make sure water heater is plugged in and the breaker is on. Check if there is 120 volts power supply to the LINE connections on the control board. If 120 volts is present, check for 24 volts output to SECONDARY terminals on the Control Board. Check for loose wires, defective transformer. Check wire harness connections from display to the control board.
4	Low Flame Sense Current	Determine flame sense current in the Service Mode with the water heater operating. If less than 4.0 microamps, check burner flame sense rod and wire. Clean flame sense rod with emery cloth. If problem is not solved, check for debris clogging burner or replace flame sense rod.
6	Flame Sensed Out of Normal Sequence (Before Opening Gas Valve or After Closing Gas Valve)	Check to make sure gas valve has closed. No voltage should be present at the gas valve before or after ignition cycle. Make sure wire positions on the wire harness are correct. If gas valve is stuck open, replace.
23	Flame Detected Before Ignition	Check to make sure gas valve has closed. No voltage should be present at the gas valve before the ignition cycle. Make sure wire positions on the wire harness are correct. If gas valve is stuck open, replace.
24	Flame Detected After Heating Cycle Completes	Check to make sure gas valve has closed. No voltage should be present at the gas valve before the ignition cycle. Make sure wire positions on the wire harness are correct. If gas valve is stuck open, replace.

Error Code	Definition of Code	Cause of Problem and Actions Taken to Correct
29	Pressure Switch Failed to Close	The blocked vent pressure switch contacts have opened. Check to make sure the venting system is not blocked. Check to make sure the condensate drain is not clogged and is sloping toward the drain. Make sure the vent length does not exceed the specified limits. Make sure the vent terminal is not blocked. Check to make sure the pressure switch tubing is clear. Replace the pressure switch if the venting system has checked out O.K. Control will reset once problem is corrected.
32	Lower Sensor Readings Faulty	Resistance of lower sensor out of operating range. Check continuity of wire harness to lower sensor, and if O.K., replace lower sensor.
57	Flame Rod Shorted to Ground	Pilot flame sensor rod is shorted to ground. Check to see if flame sensor wire has bare spots touching metal parts of if flame sensor rod is touching the burner or other metal parts. Replace if flame sense wire is damaged or flame rod is bent.
58	AC Line Frequency Error – Signal Too Noisy or Frequency Incorrect	Check line voltage frequency to the water heater. Determine if there are wide fluctuations. Call an electrician if the problem persists. The water heater should be on a separate line.
59	Line Voltage Too Low or High	Check line voltage to the water heater. Determine cause of low or high voltage. Call an electrician or your utility. The water heater should be on a separate line.
61	DC Output Voltage Unstable	Check line voltage to the water heater for erratic readings. Also check wiring to make sure there are no shorts. If power supply and wiring are O.K., replace control board.
62	Maximum Number of Retries Detected	Burner is either not lighting or not staying lit during ignition cycle. Check inlet gas pressure for minimum pressure on rating label. Can you hear sparking to the burner? Check high voltage cable connections. Check inlet gas pressure to the gas valve making sure the pressure is within the limits specified on the rating label. Check gas valve wire harness for broken wires or shorts. Check outlet gas pressure. If 24 volts is present to the terminals at the gas valve, replace gas valve. Check for voltage output to the blue gas valve wires on the control board pins. If during the ignition trial period, there is no voltage present at the control board pin terminals for the blue wires leading to the gas valve, then replace the control board. Replace spark rod if insulator is damaged or rod is loose. Check to make sure combustion blower is operating when thermostat calls for heat. If blower is not running check for 120 volts to blower harness and then at blower pin connections. Replace control, wire harness, or blower if defective. Check to make sure vent terminals are clear of debris or snow and ice. Make sure the condensate drain flows freely.
63	Maximum Number of Ignition Recycles Detected	Burner flame is lost during run cycle, then re-established on ignition cycle. Check inlet gas pressure. Is gas pressure dropping below the minimum operating pressure on the rating label after the gas valve opens? Is the gas pipe size to the water heater adequate? Check the condition of the burner. Clean or replace as needed. Check the burner flame and observe the microamp output on the run cycle. Replace burner if clogged with dirt and debris. Replace spark rod or flame sensor if damaged. Check to make sure vent terminals are clear of debris or snow and ice. Make sure the condensate drain flows freely.
64	Electronics Failure	Replace control board.
65	High Water Temperature (Over 200°F *(93°C)*)	Water temperature in tank has exceeded 200°F *(93°C)*. Check tank sensor. Make sure sensor is fully inserted into the well (clip on sensor wire secures sensor in place). Check sensor reading. If not within specifications, replace sensor. If sensor and wire harnesses check O.K., replace control board.

Procedure for Checking Thermostat Sensors

Set the thermostat above water temperature (See temperature adjustment section) and observe system through one (1) complete cycle. Make sure system operates as desired.

To check the sensor assembly, compare the resistance of the sensor wires (either outside black to center wire with yellow marking) as measured by an ohmmeter to the water temperature as measured by an accurate thermometer. Thermistor resistance increases as the temperature decreases. The tables below show the correct sensor resistance at various temperatures. Both thermistors in the sensor assembly should have approximately the same readings. Replace the sensor if the ohm reading in the chart does not approximate the reading from the sensor at the temperature measured in the tank. Use a thermometer or thermocouple to measure the temperature from the hot water outlet or T&P valve.

In Degrees F										
°F	0	1	2	3	4	5	6	7	8	9
40	26109	25400	24712	24045	23399	22771	22163	21573	21000	20445
50	19906	19383	18876	18383	17905	17440	16990	16553	16128	15715
60	15314	14925	14548	14180	13823	13477	13140	12812	12494	12185
70	11884	11592	11308	11032	10763	10502	10248	10000	9760	9526
80	9299	9078	8862	8653	8449	8250	8057	7869	7685	7507
90	7333	7165	7000	6839	6683	6531	6383	6238	6098	5961
100	5827	5697	5570	5446	5326	5208	5094	4982	4873	4767
110	4663	4562	4464	4368	4274	4183	4094	4006	3922	3839
120	3758	3679	3602	3527	3453	3382	3312	3244	3177	3112
130	3048	2986	2925	2866	2808	2752	3697	3643	2590	2538
140	2488	2439	2391	2344	2298	2253	2209	2166	2124	2083
150	2043	2004	1966	1928	1891	1856	1820	1786	1753	1720
160	1688	1656	1625	1595	1566	1567	1509	1481	1454	1427
170	1402	1376	1351	1327	1303	1280	1257	1235	1213	1191
180	1170	1150	1129	1110	1090	1071	1053	1035	1017	999
190	982	965	949	933	917	901	886	871	857	842
200	828	814	801	788	775	762	749	737	725	713

In Degrees C										
°C	0	1	2	3	4	5	6	7	8	9
0	32648	31026	29495	28049	26682	25389	24166	23010	21915	20879
10	19898	18968	18088	17253	16461	15710	14998	14322	13680	13071
20	12492	11942	11419	10922	10450	10000	9572	9165	8778	8409
30	8057	7722	7403	7099	6808	8532	6268	6016	5775	5546
40	5327	5117	4917	4726	4543	4368	4201	4042	3889	3742
50	3602	3468	3340	3217	3099	2986	2878	2774	2675	2579
60	2488	2400	2316	2235	2157	2083	2011	1942	1876	1813
70	1752	1693	1637	1582	1530	1480	1432	1385	1340	1297
80	1256	1216	1177	1140	1105	1070	1037	1005	974	944
90	916	888	861	835	810	786	763	741	719	698

Manufactured under one or more of the following U.S. Patents: RE.34,534; B1 5,341,770; 4,416,222; 4,628,184; 4,669,448; 4,672,919; 4,808,356; 4,829,983; 4,861,968; 4,904,428; 5,000,893; 5,023,031; 5,052,346; 5,081,696; 5,092,519; 5,115,767; 5,199,385; 5,277,171; 5,372,185; 5,485,879; 5,574,822; 5,596,952; 5,660,165; 5,682,666; 5,761,379; 5,943,984; 5,954,492; 5,988,117; 6,142,216; 6,684,821; 7,063,132;
Other U.S. and Foreign patent applications pending. Current Canadian Patents: 1,272,914; 1,280,043; 1,289,832; 2,045,862; 2,092,105; 2,107,012; 2,108,186; 2,112,515

SECTION XII: PARTS LIST

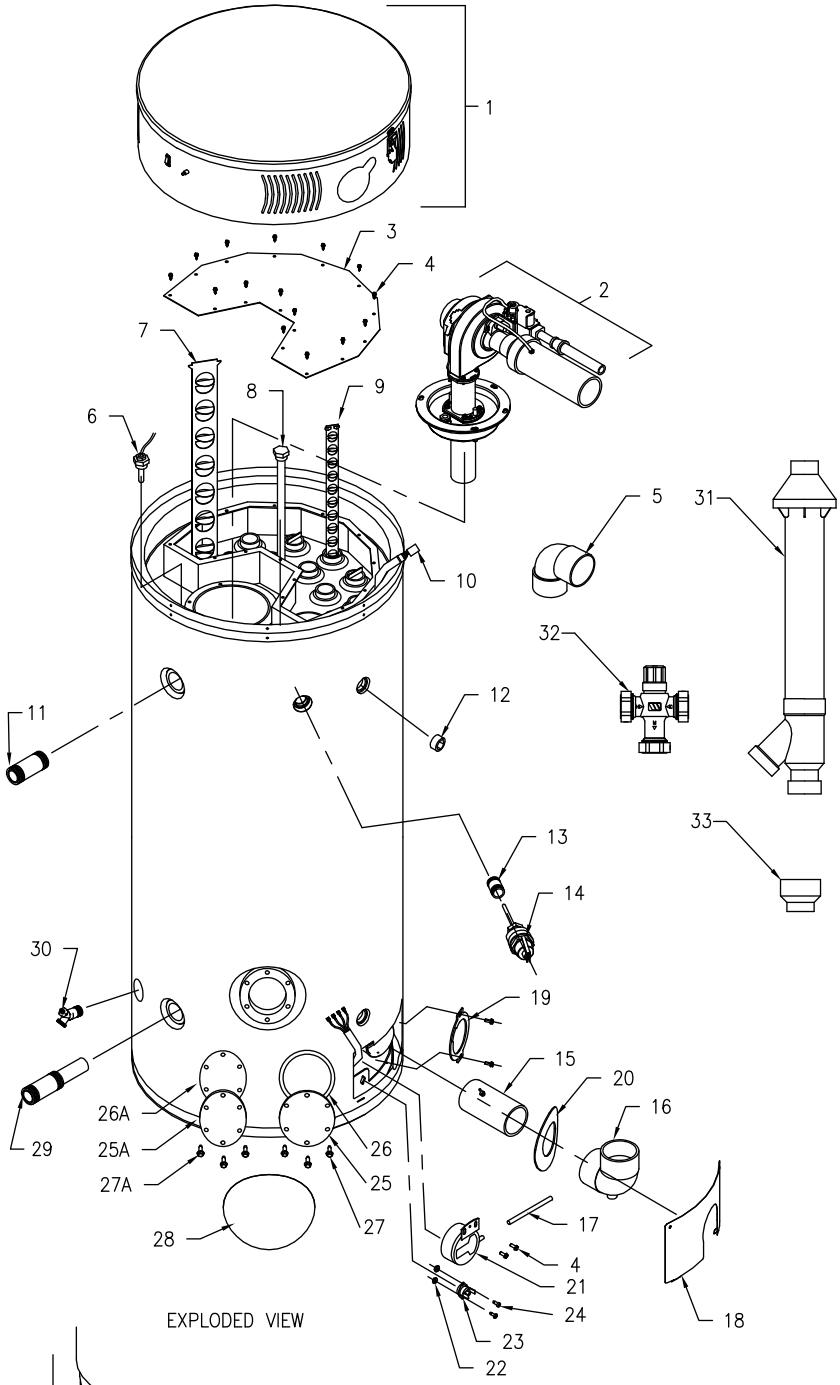

EXPLODED VIEW

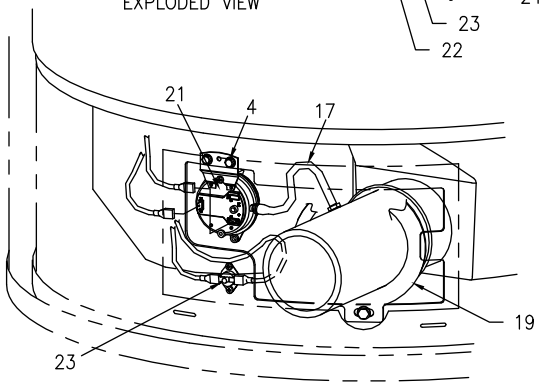

EXHAUST SERVICE AREA DETAIL
(ASSEMBLED)

EF™ – Series Water Heater

1	Combustion Surround Assembly
2	Burner Assembly (Specify model)
3	2nd Pass Top Collector Cover
4	Screw 10-16 x ¾
5	Vent Termination Elbow
6	Thermostat Sensor Probe
7	Baffle 4” Flue (Specify Model)
8	Mag. Rod Assembly
9	Baffle 2” Flue
10	Wire Harness-Service Panel
11	Plastisert Nipple 1” NPT
12	Plug
13	Nipple
14	T&P Relief Valve
15	Exhaust Pipe (PVC) w/ Barb Tap
16	Condensate Trap Elbow
17	Silicone hose
18	Outer Door Service Panel (Specify model)
19	Vent Pipe Support Bracket
20	NSF Escutcheon
21	Exhaust Pressure Switch
22	Nuts
23	Collector Limit Switch
24	Screw 6-32 x ⅜
25	Cleanout Access Cover
26	Cleanout Gasket
27	Screw 5/16 - 18 x ¾ HH Grade 5
28	Cleanout Cover
29	Cold Water Inlet (Hydrojet) Assembly
30	No Handle Brass Drain Valve
31	Concentric Vent System (Optional)
32	Thermostatic Mixing Valve
33	3” to 2” PVC Reducer

Customer must specify complete model number and serial number when ordering service parts.

1 Combustion Surround Assembly

AA	Keeper Latch & Catch
BB	Screw 8-32 x ½ RHCR
CC	Control Panel Assembly
DD	Jacket Head 28 ¼" Grey
EE	Switch Main Power
FF	Control Display
GG	Combustion Surround

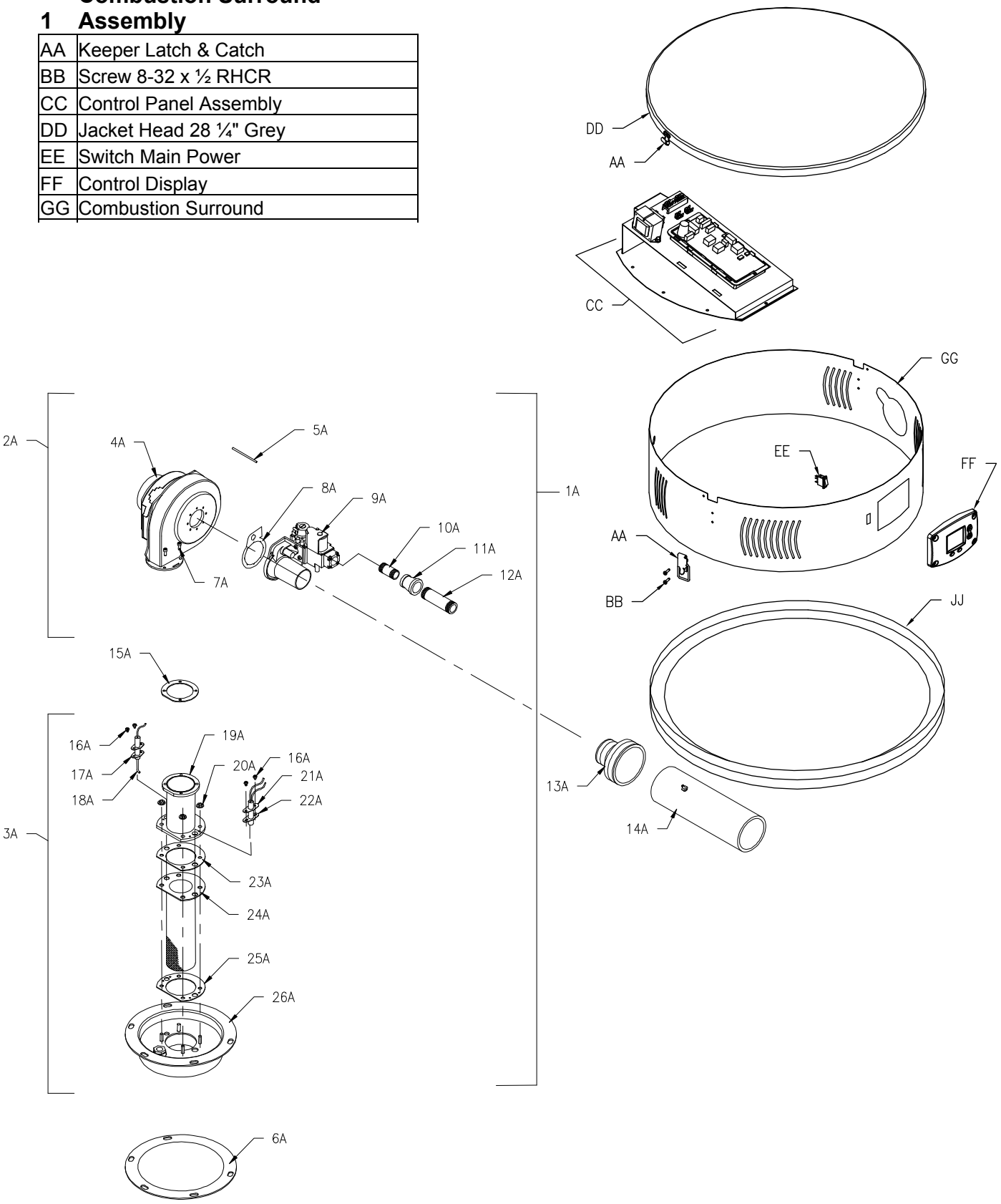

Customer must specify complete model number and serial number when ordering service parts.

2 Combustion Assembly (pictured previous page)

1A	Combustion Assembly (Specify model)	14A	Inlet (PVC)
2A	Blower/Gas Valve Assembly (Specify model)	15A	Gasket Blower Transition (Specify model)
3A	Burner Assembly (Specify model)	16A	Screw 8-32 x ¼ RHCR
4A	Blower – EBM (Specify model)	17A	Gasket Flame Sensor
5A	Silicone Hose	18A	Flame Sensor
6A	Burner Mounting Insert Gasket	19A	Transition Tube
7A	Screw 10-32 x ¾ SHCS	20A	Nut Hex Washer
8A	Gasket & Screw	21A	Gasket Spark Rod
9A	Gas Valve (Specify model)	22A	Spark Rod
10A	Nipple 1/2 NPT x 3"	23A	Burner Mounting Gasket
11A	Reducer ¾ x ½ NPT (or ¾" x 1" for 399)	24A	Burner 21 Port
12A	Nipple ¾ NPT x 6" (or 1" NPT for 399)	25A	Burner Mounting Gasket
13A	2" dia. Flex Reducer (or PVC reducer for 399)	26A	Burner Mounting Insert

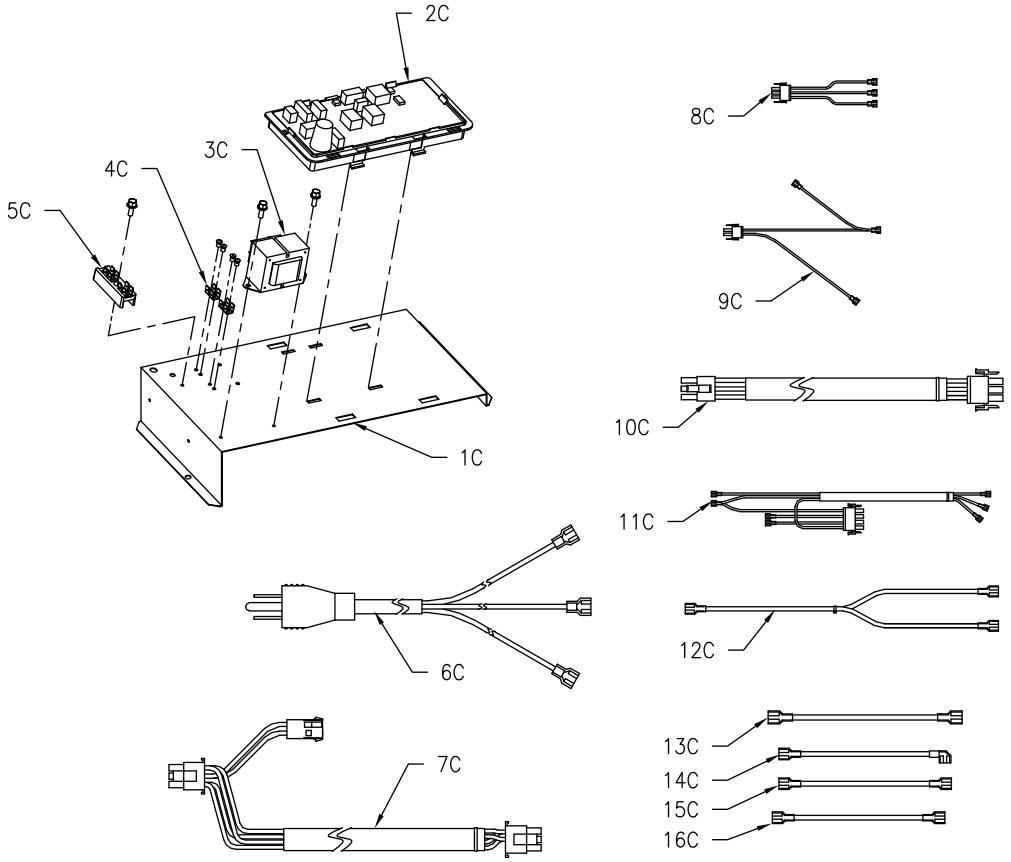

CC	Ignition Control Assembly		
1C	Control Mounting Panel	9C	Secondary Transformer Harness
2C	Thermostat PC Board	10C	Blower Harness
3C	Transformer – 120/24 VAC	11C	Power Switch Harness
4C	Terminal	12C	Powered Anode Harness (399 only)
5C	Terminal Strip	13C	Black Powered Anode Wire Assembly (399 only)
6C	Powered Anode Control (399 only)	14C	White Powered Anode Wire Assembly (399 only)
7C	Controller harness	15C	Green Powered Anode Wire Assembly (399 only)
8C	Primary Transformer Harness	16C	Sensor Wire Assembly (399 only)

Customer must specify complete model number and serial number when ordering service parts.

SUPPLEMENT – VENTING INSTRUCTIONS FOR INSTALLATION AND OPERATING INSTRUCTION MANUALS 238-48384-00, 238-44727-00, 238-44445-00, 238-48144-00, 238-47936-00, 238-45917-00, 238-45637-00, 238-47448-00, 238-48071-00, 238-49060-00, AND 238-47707-00 FOR HIGH EFFICIENCY CONDENSING COMMERCIAL, POWER DIRECT VENT COMMERCIAL, POWER VENT COMMERCIAL, RESIDENTIAL POWER DIRECT VENT, and RESIDENTIAL POWER VENT MODEL SERIES

INSTALLATION OF CENTROTHERM INNOFLUE® SINGLE WALL POLYPROPYLENE VENTING SYSTEMS

This supplement is for the installation of polypropylene single wall venting system manufactured by Centrotherm ECO Systems, LLC. The Centrotherm venting system is a CSA approved alternative to the PVC, ABS, and CPVC venting components for the High Efficiency Commercial Condensing, Power Direct Vent Commercial, Power Direct Vent Residential, and Residential Power Vent model series.

The Centrotherm venting system components are ULC S636 approved and listed by a recognized agency and may be installed in the U.S. and Canada. All components used must be from the same manufacturer and are designed for use with the above noted products. The Centrotherm components may be purchased from plumbing supply distributors. The vent size diameter and maximum vent lengths must be followed as detailed in the Installation and Operating Instruction Manual that was supplied with the water heater. Thoroughly read and understand the venting section of the instruction manual supplied with the water heater before proceeding with the following instructions in this supplement. The vent terminals supplied with the water heater or the factory approved accessory vent terminal kits must be used with this venting system.

⚠ WARNING
The venting system must be properly installed. Failure to properly install the vent system could result in property damage, personal injury, or death.
DO NOT install damaged venting system components. If damage is evident then please contact the supplier where the water heater or venting system components were purchased for replacement parts.
Use only the vent terminals provided or factory authorized terminals for venting this water heater.
The water heater requires its own separate venting system. Do not connect the exhaust vent into an existing vent pipe or chimney.
All of the exhaust venting connections must be leak checked with a soap solution upon initial start-up of the water heater. Any leaks must be repaired before continuing operation of the water heater.
Do not terminate the venting where noise from the exhaust or intake will be objectionable. This includes locations close to or across from windows and doors. Avoid anchoring the vent and intake pipes directly to framed walls, floors, or ceilings unless rubber isolation pipe hangers are used. This prevents any vibrations from being transmitted into the living spaces.
Do not exceed the venting distances or the number of elbows listed in the instruction manual supplied with the water heater. Exceeding the maximum venting distances may cause the water heater to malfunction or cause an unsafe condition.
DO NOT operate this water heater until the venting installation is complete and the piping completed. Failure to complete installation before operation can result in property damage, personal injury, or death.
DO NOT install Centrotherm Innoflue venting components with any other manufacturer's vent components. Centrotherm Innoflue components must be used exclusively throughout the entire venting system from the water heater coupling or vent connection to the outside wall or ceiling near the vent terminal location.
This supplement is intended only for additional information for installing Centrotherm Innoflue single wall venting system and the instruction manual supplied with the water heater must be followed for the detailed information provided for the venting system installation.

Step 1: Thoroughly read and understand the venting section of the Installation and Operating Instruction Manual that was supplied with the water heater before determining the location of the water heater and the vent terminals. Locate the water heater for the shortest practical vent length to the outside. Measure the total venting distance required to reach the outside wall or roof. Determine the diameter of the venting components to use for the length of vent pipe (and combustion air supply for direct vent models) required by referring to the venting tables in the instruction manual for the maximum vent length for each diameter pipe size. Obtain all the necessary venting system components for the installation.

Step 2: Before installation, inspect each vent component for damage making sure the gaskets for each component are fully intact and in undamaged condition. Do not attempt to install or repair damaged components. If a gasket is damaged, these are available from the supplier of Centrotherm Innoflue components. Do not use gaskets from another manufacturer and do not try to repair the gasket.

Step 3: A Centrotherm PVC to Polypropylene adapter (Centrotherm ISAGL part series) must be used to connect into a PVC coupling or tee (Commercial and Residential Power Direct Vent air intake connections), condensate elbow (High Efficiency Commercial Condensing models) or the exhaust outlet adapter for Commercial Power Direct Vent and Residential Power Vented models. To make the insertion of the gasketed fittings into the coupling easier, Centrocerin gasket lubricant is recommended. Centrocerin is a water based lubricant available from your Centrotherm supplier. If Centrocerin is not available, water may be used. DO NOT use any other kind of lubricant which may damage the gaskets.

Apply lubricant using your finger to the gasket surface and inside of the coupling and insert the male end of the adapter with the exterior gasket into the coupling, condensate elbow or exhaust outlet adapter connection. If a larger vent diameter size is to be used, use the appropriately sized reducer coupling first on the water heater intake or exhaust vent connection as detailed in the installation manual supplied with the water heater. See the following photos.

⚠ WARNING

Use only water or Centrocerin lubricant for lubricating the gaskets and pipe ends to allow easy insertion. DO NOT use any other kind of lubricant, since deterioration of the gasket may result, which may allow dangerous flue gases to leak into the room. If the vent pipe needs to be disassembled after the gasket has dried, wet the joint thoroughly to loosen the connection.

High Efficiency Condensing Commercial Models: Use the appropriate primer and cement (refer to venting section of instruction manual with water heater) for cementing a PVC coupling (not supplied with water heater) to the end of the PVC air intake pipe connection. Apply Centrocerin lubricant with your finger to the male gasketed end of the Centrotherm PVC adapter and fully insert into the air intake coupling. Loosen the Centrotherm flue pipe clamp (Centrotherm p/n IAFC03) and install on the end of the PVC coupling so that the 3 clamp hooks secure the PVC adapter to the PVC coupling. See following photos.

Install PVC pipe coupling over air intake pipe connection and cement to pipe using appropriate solvent and cement.

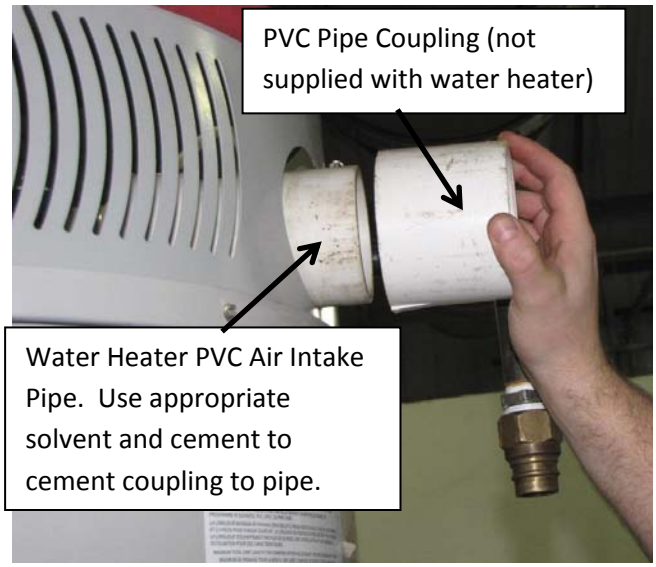

Apply Centrocerin Lubricant to PVC Adapter gasket using finger

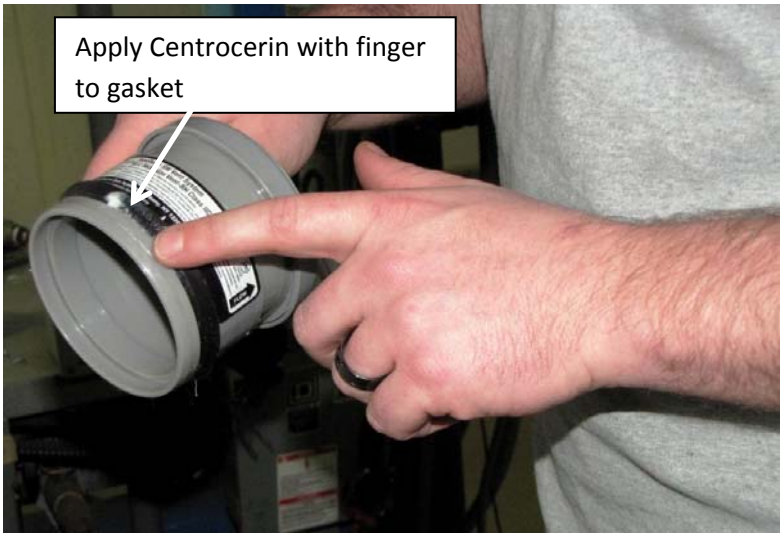

Insert male gasketed end of Centrotherm PVC adapter into PVC pipe coupling.

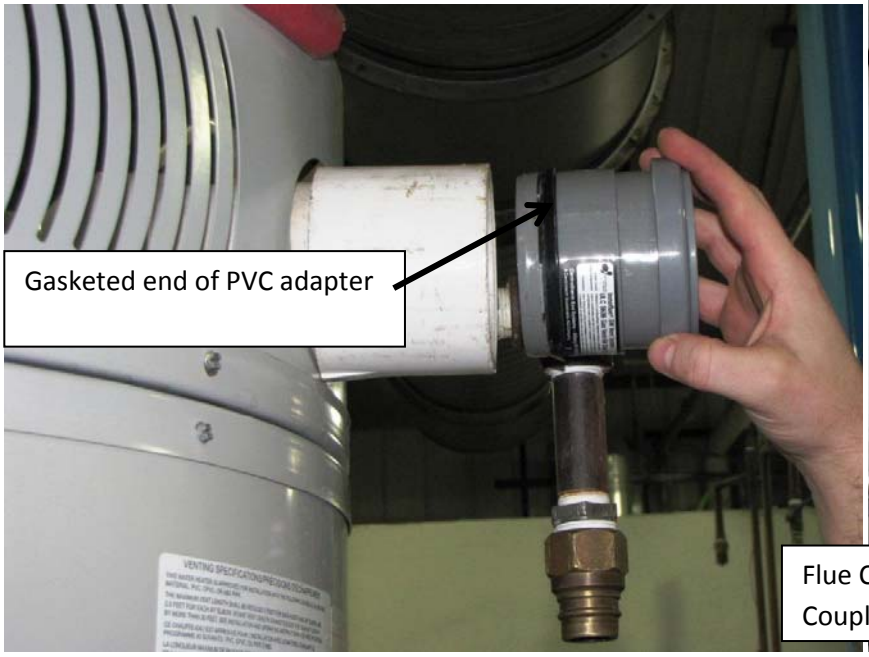

Install Centrotherm Flue Clamp (IAFC03) over the PVC coupling so that clamp brackets secure the shoulder of PVC adapter fitting.

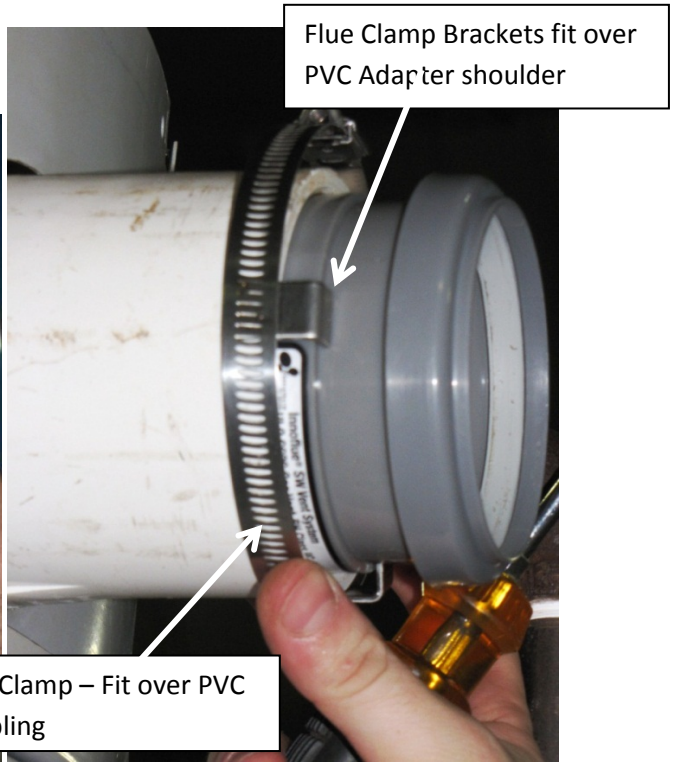

Tighten clamp screw securely to secure the PVC Adapter to
the cemented PVC coupling. Refer to the instruction manual for appropriate solvent and cement.

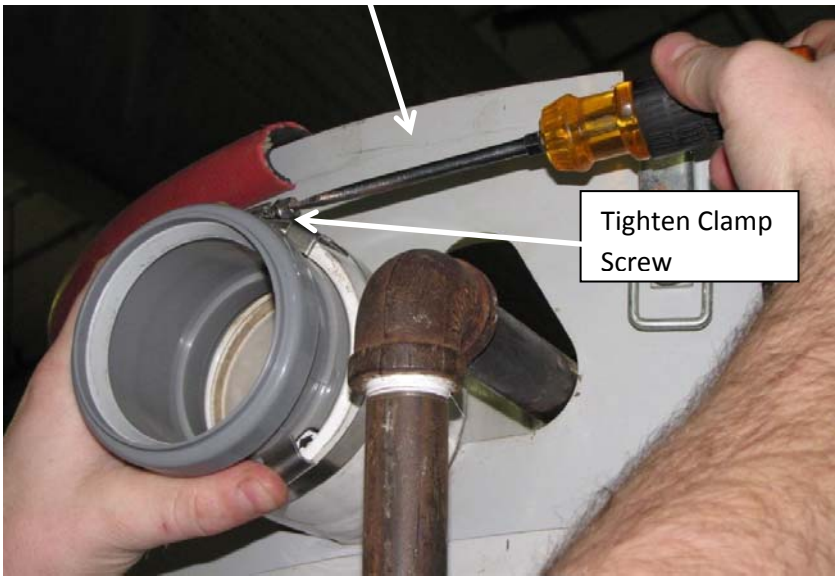

⚠ WARNING

Centrotherm Flue Clamps (p/n: IAFC02, 03, or 04) MUST be properly installed to secure the PVC Vent Adapter. DO NOT operate the vent system without first installing the Flue Clamps.

For High Efficiency Commercial Model series exhaust connection, apply Centrocerin lubricant with finger to outside gasket and insert PVC adapter into the condensate elbow. Insert PVC Adapter fitting into Condensate Elbow as shown.

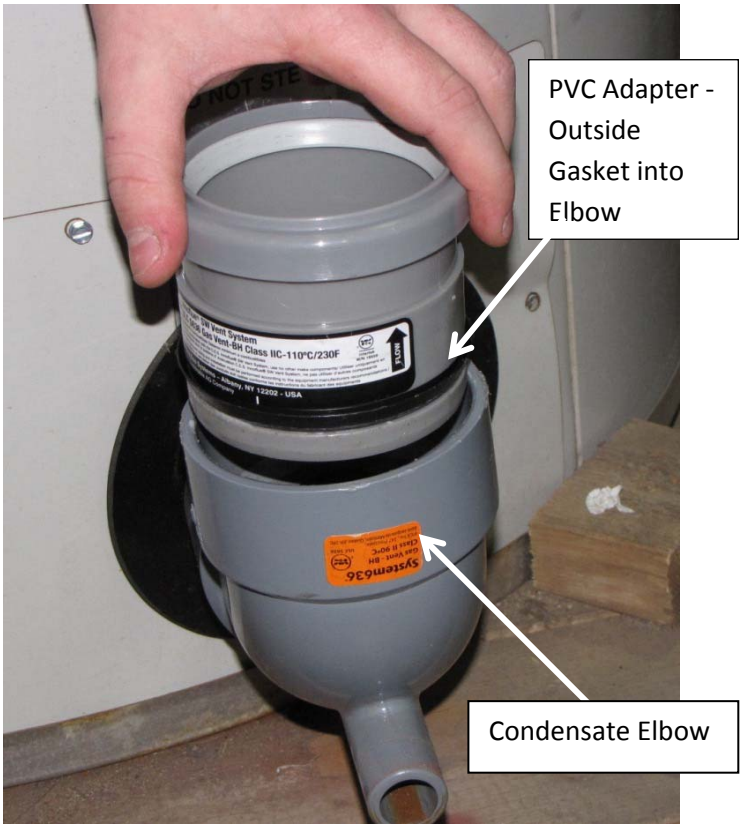

Install Centrotherm Flue Clamp around outside of elbow so that Clamp Brackets engage PVC Adapter shoulder as shown.

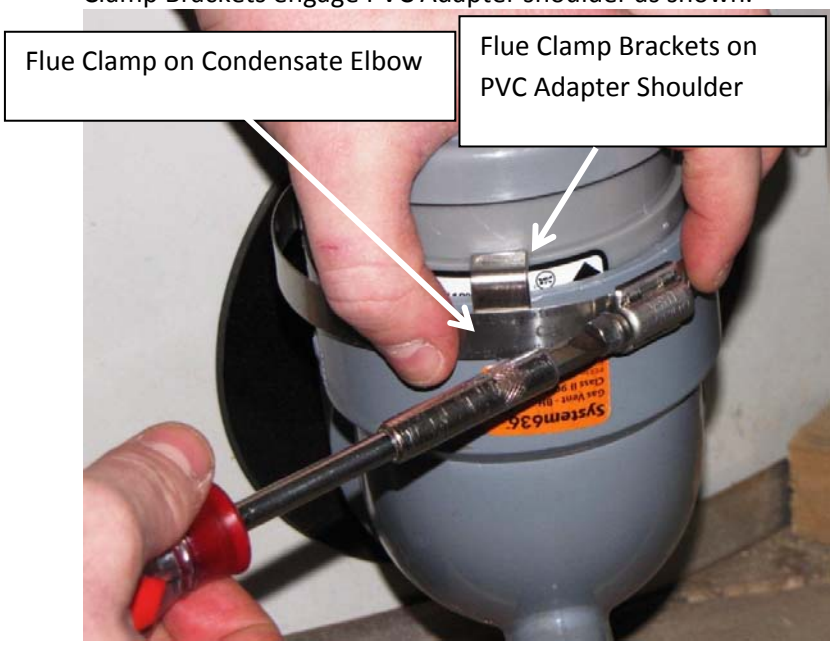

Tighten Flue Clamp Screw to secure PVC Adapter into Condensate Elbow

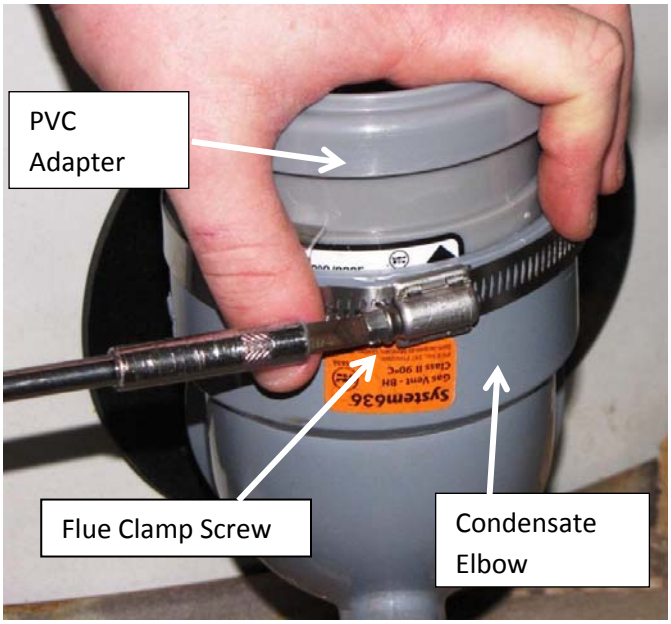

<u>Commercial and Residential Power Direct Vent Models and Residential Power Vent Models:</u>

For installations of commercial and residential power direct vent models, install the PVC adapter into the air intake pipe tee as shown.

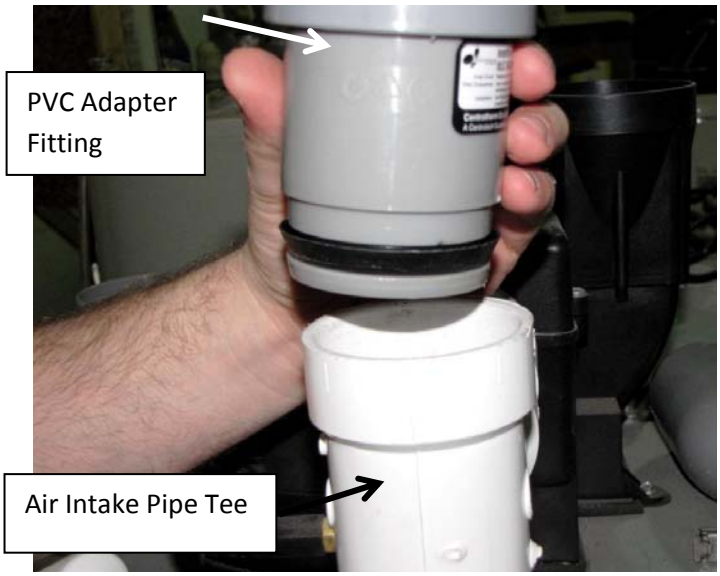

Install the Flue Clamp over the Air Intake Pipe Tee and tighten Flue Clamp Screw to secure the PVC adapter.

For the exhaust venting for all power vent and power direct vent models, insert the PVC Adapter into the Exhaust Outlet Adapter. On residential models, tighten the clamp to secure the PVC Adapter.

For Commercial Power Direct Vent models, insert PVC Adapter into Exhaust Outlet Adapter.
Install Flue Clamp over Exhaust Outlet Adapter and Tighten clamp screw to secure the PVC Adapter.

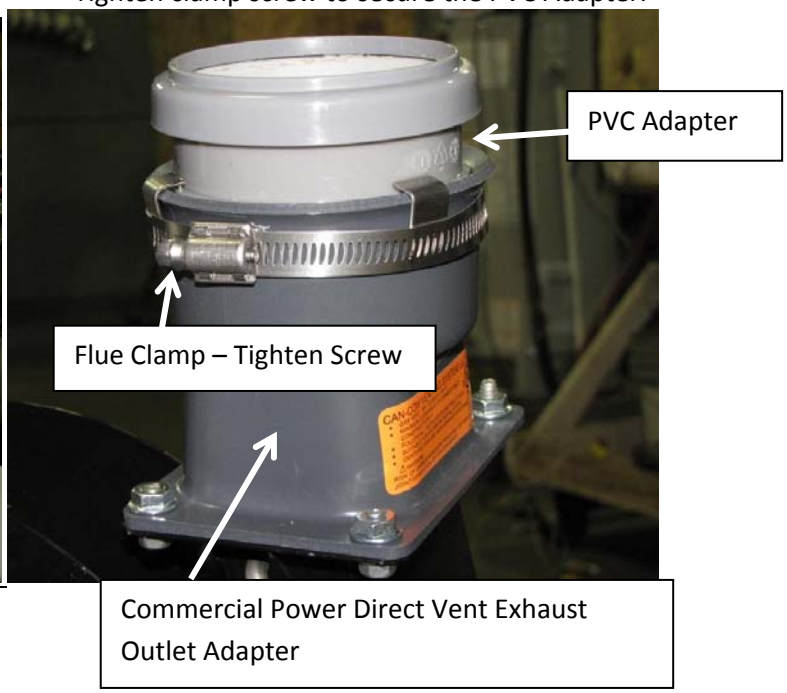

Step 4: Lubricate the inside gasket of the PVC adapter and the male end (without gasket) of the elbow or straight section of pipe for running the exhaust or intake pipe from the water heater. Insert the male end of the elbow or straight section into the PVC adapter. Use a twisting motion while pushing the male end of the pipe or elbow into the PVC adapter to fully seat into the gasket. The male end of the pipe or elbow must always point toward the water heater.

Apply Centrocerin lubricant to the inside gasket of the PVC adapter.

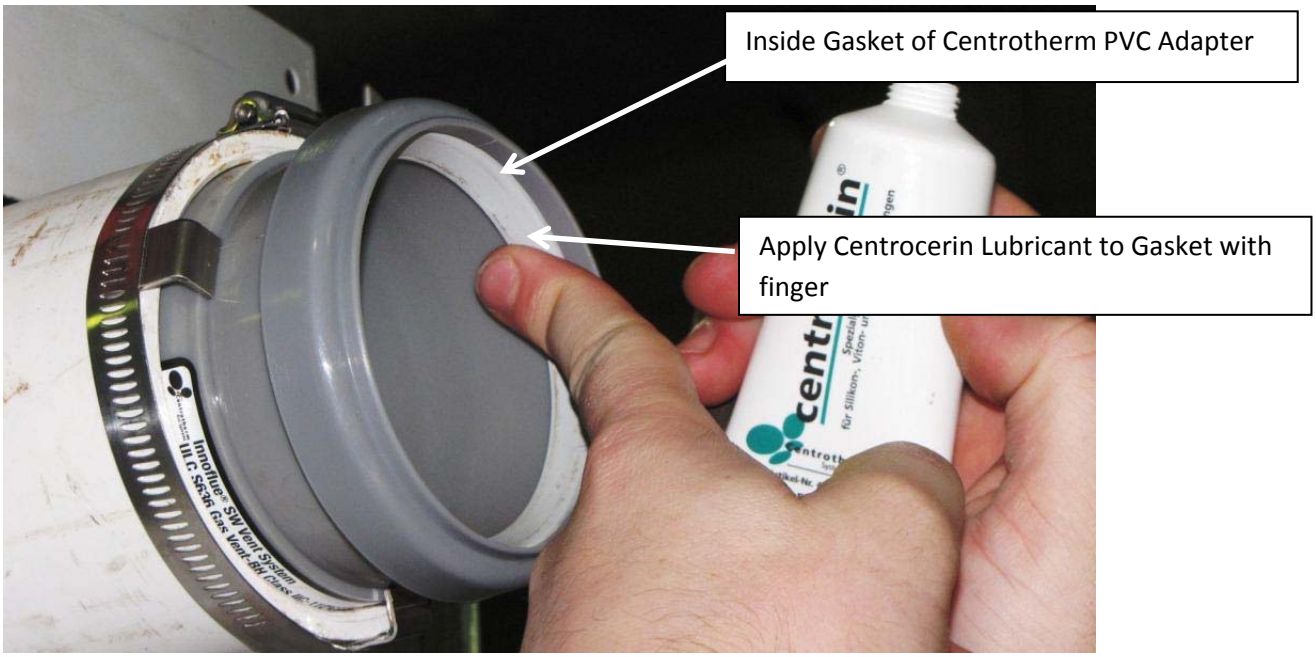

Insert the male end of the straight pipe or elbow into the flanged gasketed end of the PVC adapter. Push the pipe or elbow into the adapter using a twisting motion to fully insert the pipe into the gasket inside the adapter.

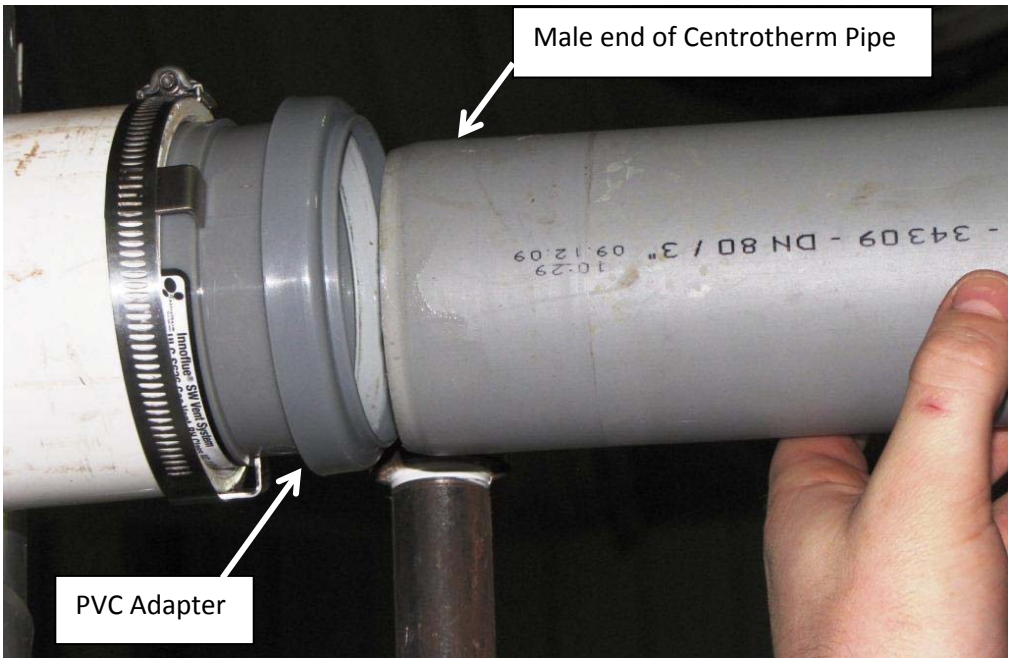

⚠ WARNING

Make sure pipe sections are fully inserted into the PVC adapter and/or gasketed end of Centrotherm fitting. Insertion depth is no less than 2 inches.

Step 5: Centrotherm supplied support brackets must be used to support the pipe sections. The vent pipe sections **must be** supported a minimum of every 5 feet (1.5 meters) of vertical run or every 3 feet (1 meter) of horizontal run of pipe. Consult local codes for additional requirements. In addition, support brackets must be installed on both sides of elbows used in the venting system.

High Efficiency Commercial Condensing Models:

For horizontal sections of flue pipe, the pipe must be installed with a slight upward slope of approximately 5/8 inch per foot (5.6 cm per meter) toward the water heater (as recommended by Centrotherm) to allow condensate to drain into the condensate elbow.

Residential and Commercial Power Direct Vent and Residential Power Vent Models:

To prevent condensate from accumulating in the exhaust blower, install the horizontal vent pipe with a downward slope toward the vent terminal of 5/8 inch per foot (5.6 cm per meter) of horizontal vent pipe. An optional condensate kit is available for residential power vent models or a tee fitting with a condensate drain loop may be used on commercial power direct vent models to prevent condensate accumulation in the blower for long vertical runs of vent pipe. Refer to the venting section of the Installation and Operating Instructions supplied with the water heater.

Installing pipe clamp around pipe every 3 feet to support pipe. Install pipe clamps on each side of elbow.

Steel joint connector rings (available from Centrotherm supplier) must be used at each pipe joint. The connector rings ensure that the joints do not separate under heavy loads. These connector rings must be used to comply with ULC-S636 requirements. See following photo with the joint connector attached to the pipe sections.

Pipe shown with connector ring

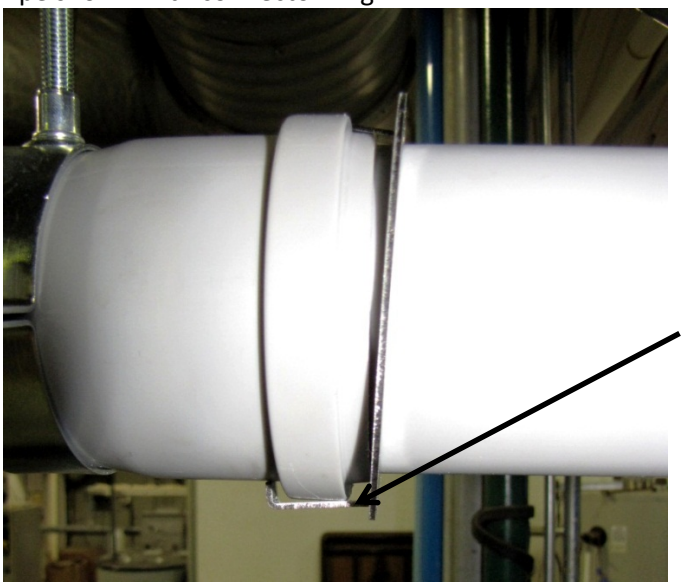

⚠ WARNING

DO NOT operate vent system without properly installing Connector Rings.

Step 6: If any of the straight pipe sections need to be cut, use a hack saw and make a straight cut on the male (ungasketed) end of the pipe. When making the cut, allow for the 2” minimum (51 mm) insertion distance inside the female end of the pipe. Using a razor knife, deburr the edges of the cut pipe to make an approximately 15 degree bevel to avoid any sharp edges that may damage the gasket.

⚠ WARNING

Cut pipe edges must be properly deburred. Damage to the gasket from not deburring the edges of the cut male end may result in the release of dangerous flue products.

Cut end of pipe to length using a hacksaw. Cut male end only and allow for 2” insertion depth into female end of fitting.

Deburring cut pipe edge with razor knife to create smooth 15° (approx.) bevel to prevent gasket damage.

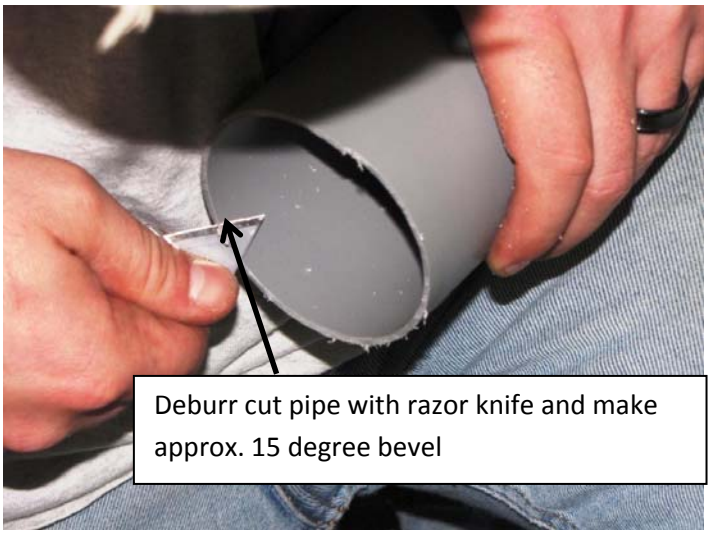

Step 7: Continue installing straight sections of pipe and elbows and support with pipe support clamps as previously shown a minimum of every 36 inches (1 meter). Run the vent pipe near the outside wall or roof to be terminated. A Centrotherm ISTAGL-0202, 0303, or 0404 PVC Termination Adapter (2”, 3” or 4” diameters) must be used to connect the Centrotherm polypropylene vent pipe to PVC pipe first before exiting the wall or roof. The Centrotherm polypropylene to PVC Vent Adapter has a male ungasketed end and a male outside gasket on the other end. The ungasketed end of the Centrotherm PVC Termination Adapter is inserted into the last section of the gasketed end of vent pipe. The arrow on the Centrotherm PVC termination adapter must point toward the vent terminal. Connect the PVC coupling and flue pipe clamp to the gasketed end of the PVC Termination Adapter. Cut the PVC pipe to the length needed to exit the wall or roof. Refer to the installation instruction manual supplied with the water heater for information regarding the location of the vent terminals.

Cut the male end of the last piece of pipe to the length as needed to get near the exiting wall or ceiling of the desired outside vent terminal location. Install this last section of pipe.

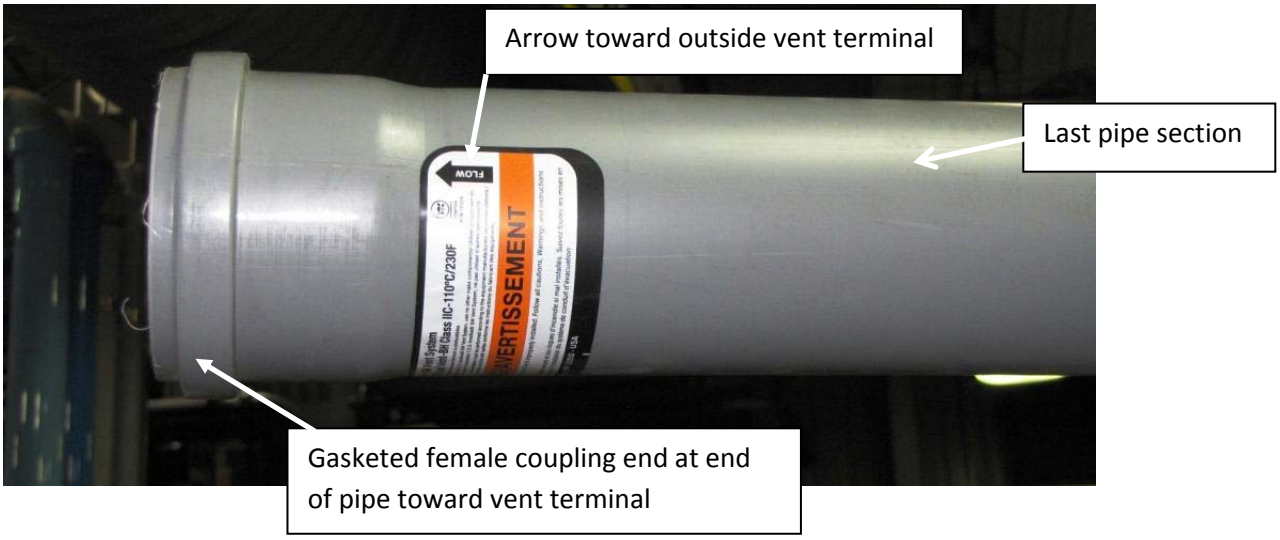

Install the appropriate diameter Centrotherm ISTAGL PVC Termination Adapter on the end of the last pipe.

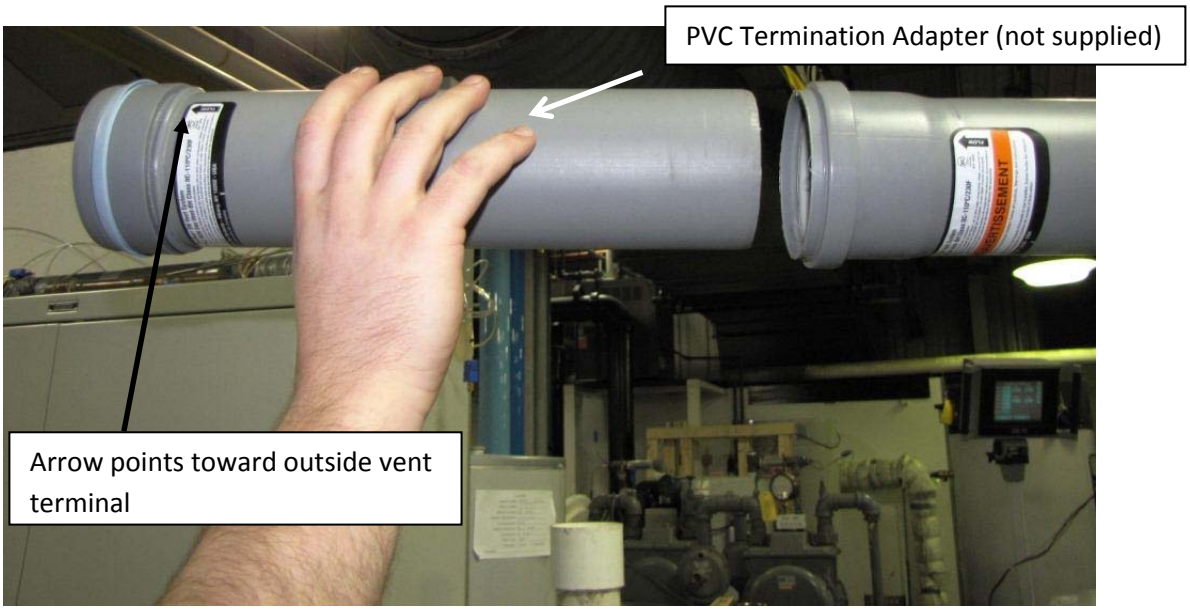

Install a PVC coupling onto the male gasketed end of the Centrotherm PVC Termination Adapter. A reducer coupling may be needed to use the supplied vent terminals if a larger pipe diameter size was used. Cement the straight section of PVC pipe to the PVC pipe coupling. Install the PVC pipe to exit the wall or roof, and then cement the vent terminal onto the PVC or CPVC pipe. Refer to the venting section of the water heater Installation and Operating Instruction manual for the appropriate solvent and cement to use. The exhaust vent terminal for the EF model series is shown. Use the vent terminals supplied with the water heater. See the following photos.

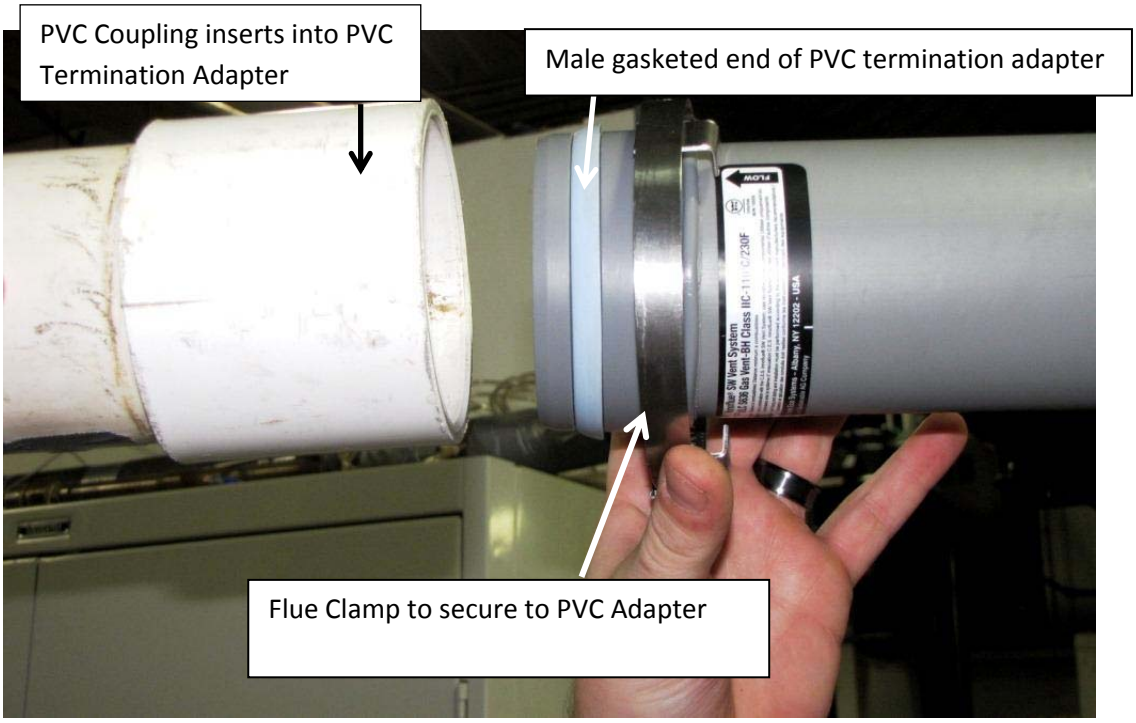

⚠ WARNING

A Centrotherm ISTAGL series PVC Vent Termination Adapter must be used at the end of the last section of polypropylene vent pipe to connect to the PVC pipe coupling. The arrow must point toward the vent terminal. DO NOT USE THE SAME PVC ADAPTER THAT IS USED TO CONNECT TO THE WATER HEATER.

Secure the PVC coupling to the PVC Terminal Adapter with the Centrotherm Flue Pipe Clamp. Cement a short section of PVC pipe into the PVC pipe coupling. Cement the supplied PVC exhaust terminal coupling onto the PVC pipe.

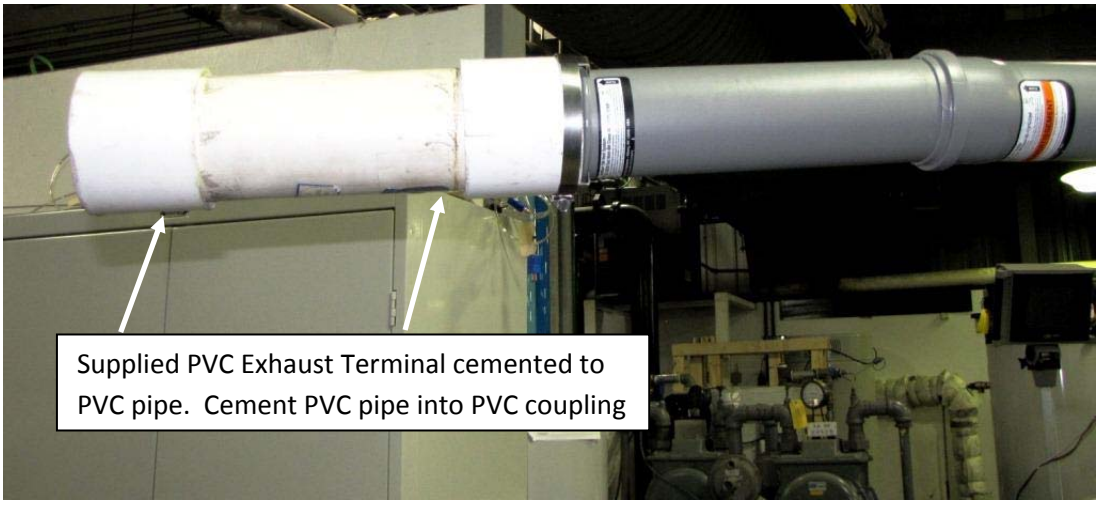

Step 8: After the venting system installation is completed, start the water heater and check all joints for leaks using a soapy water solution. Any leaks found must be repaired. If a gasket is damaged, replacement gaskets may be obtained from the local Centrotherm supplier.

⚠ WARNING

All of the exhaust venting connections must be leak checked with a soap solution upon initial start-up of the water heater. Any leaks must be repaired before continuing operation of the water heater.
Periodically check all venting system connections for leakage. Replace any defective venting components. Refer to the maintenance section of the Installation and Operating Instructions for further details.