Installation Instructions For Commercial Heating & Cooling 3 Ton - 6 Ton Package Gas Unit CPG Series

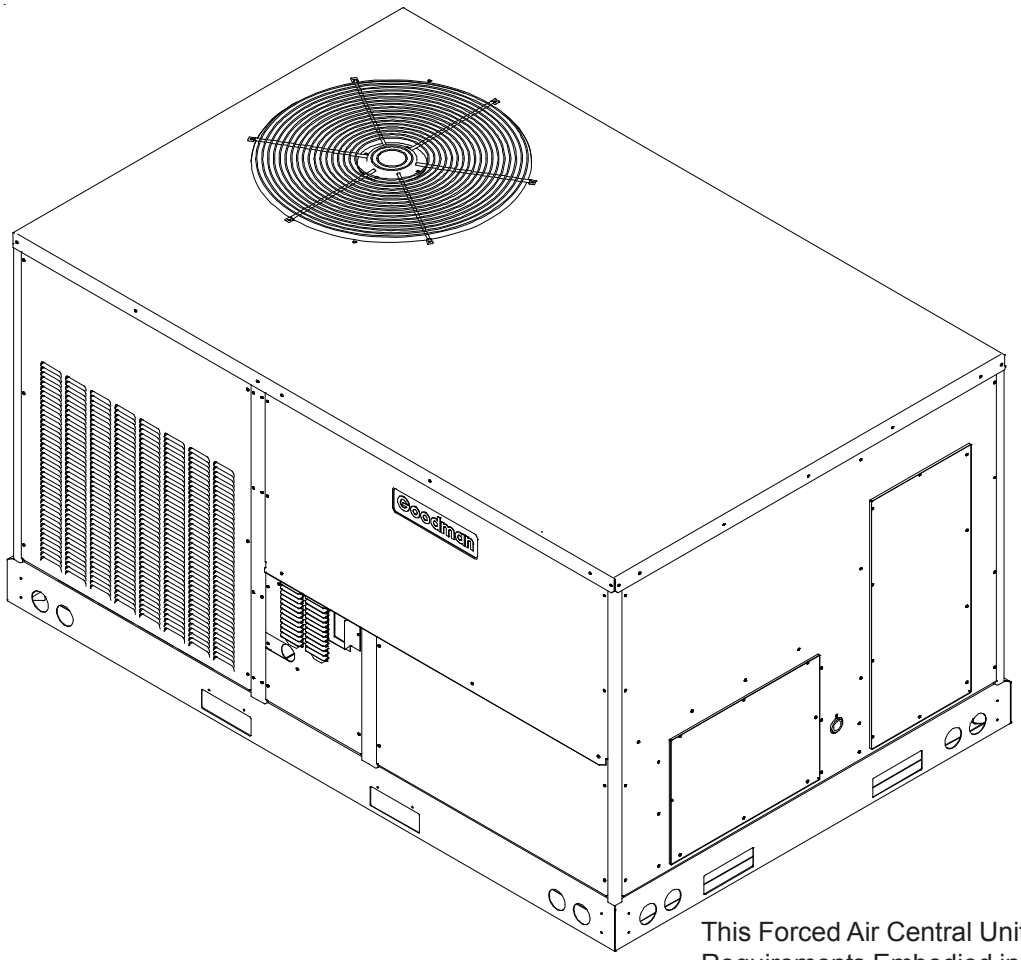

This Forced Air Central Unit Design Complies With Requirements Embodied in The American National Standard / National Standard of Canada Shown Below.

ANSI Z21.47•CSA-2.3 Central Furnaces

RECOGNIZE THIS SYMBOL AS A SAFETY PRECAUTION.

ATTENTION INSTALLING PERSONNEL

Prior to installation, thoroughly familiarize yourself with this Installation Manual. Observe all safety warnings. During installation or repair, caution is to be observed.

It is your responsibility to install the product safely and to educate the customer on its safe use.

All information contained herein is subject to change without notice.

IO-353J
12/12

Goodman Manufacturing Company, L.P.
5151 Felipe, Suite 500, Houston, TX 77056
www.goodmanmfg.com www.amana-hac.com

© 2009-2012 Goodman Manufacturing Company, L.P.

Index

Replacement Parts 2
Safety Instructions 2
General Information 3
Unit Location 4
Clearances 6
Roof Curb Post-Installation Checks 6
Roof Top Duct Connections 6
Rigging Details 7
Electrical Wiring 9
Gas Supply Piping 10
Propane Gas Installations 12
Circulating Air and Filters 13
Venting 13
Condensate Drain Connection 13
Startup, Adjustments, and Checks 14
Normal Sequence Of Operation 19
Troubleshooting 20
Input Rating 21
Air flow Adjustments 22
Motor Sheave Adjustments 22
Maintenance 22
Appendix A Blower Performance Tables 25
- Direct Drive 25
  - CPG036 Down Shot and Horizontal 25
  - CPG048 Down Shot and Horizontal 26
  - CPG060 Down Shot 27
  - CPG060 Horizontal 28
- Belt Drive 29
  - Standard Down Shot 29
  - Standard Horizontal 30
  - High Static Down Shot 31
  - Belt Drive - High Static Horizontal 32

Appendix B Electrical Data 33
Appendix C Unit Dimensions 34
Appendix D Wiring Diagrams 35

REPLACEMENT PARTS

Ordering Parts

When reporting shortages or damages, or ordering repair parts, give the complete unit model and serial numbers as stamped on the unit's nameplate.

Replacement parts for this appliance are available through your contractor or local distributor. For the location of your nearest distributor, consult the white business pages, the yellow page section of the local telephone book or contact:

CONSUMER AFFAIRS
GOODMAN MANUFACTURING COMPANY, L.P.
7401 SECURITY WAY
HOUSTON, TEXAS 77040
(877) 254-4729

SAFETY INSTRUCTIONS

To The Installer

Before installing this unit, please read this manual to familiarize yourself on the specific items which must be adhered to, including maximum external static pressure to unit, air temperature rise, minimum or maximum CFM and motor speed connections.

Keep this literature in a safe place for future reference.

WARNING

If the information in these instructions is not followed exactly, a fire or explosion may result causing property damage, personal injury or loss of life.
- Do not store or use gasoline or other flammable vapors and liquids in the vicinity of this or any other appliance.
- **WHAT TO DO IF YOU SMELL GAS:**
  * Do not try to light any appliance.
  * Do not touch any electrical switch; do not use any phone in your building.
  * Immediately call your gas supplier from a neighbors phone. Follow the gas suppliers instructions.
  * If you cannot reach your gas supplier, call the fire department.
- Installation and service must be performed by a qualified installer, service agency or the gas supplier

WARNING

Should overheating occur or the gas supply fail to shut off, turn off the manual gas shutoff valve external to the furnace before turning off the electrical supply.

CAUTION

Sheet metal parts, screws, clips and similar items inherently have sharp edges, and it is necessary that the installer and service personnel exercise caution.

WARNING

DO NOT CONNECT TO OR USE ANY DEVICE THAT IS NOT DESIGN CERTIFIED BY GOODMAN FOR USE WITH THIS UNIT. SERIOUS PROPERTY DAMAGE, PERSONAL INJURY, REDUCED UNIT PERFORMANCE AND/OR HAZARDOUS CONDITIONS MAY RESULT FROM THE USE OF SUCH NON-APPROVED DEVICES.

WARNING

THIS PRODUCT CONTAINS OR PRODUCES A CHEMICAL OR CHEMICALS WHICH MAY CAUSE SERIOUS ILLNESS OR DEATH AND WHICH ARE KNOWN TO THE STATE OF CALIFORNIA TO CAUSE CANCER, BIRTH DEFECTS OR OTHER REPRODUCTIVE HARM.

WARNING

TO AVOID PROPERTY DAMAGE, PERSONAL INJURY OR DEATH, DO NOT USE THIS UNIT IF ANY PART HAS BEEN UNDER WATER. IMMEDIATELY CALL A QUALIFIED SERVICE TECHNICIAN TO INSPECT THE FURNACE AND TO REPLACE ANY PART OF THE CONTROL SYSTEM AND ANY GAS CONTROL HAVING BEEN UNDER WATER.

WARNING

THIS UNIT MUST NOT BE USED AS A "CONSTRUCTION HEATER" DURING THE FINISHING PHASES OF CONSTRUCTION ON A NEW STRUCTURE. THIS TYPE OF USE MAY RESULT IN PREMATURE FAILURE OF THE UNIT DUE TO EXTREMELY LOW RETURN AIR TEMPERATURE AND EXPOSURE TO CORROSIVE OR VERY DIRTY ATMOSPHERES.

WARNING

HIGH VOLTAGE!
DISCONNECT ALL POWER BEFORE SERVICING OR INSTALLING THIS UNIT. MULTIPLE POWER SOURCES MAY BE PRESENT. FAILURE TO DO SO MAY CAUSE PROPERTY DAMAGE, PERSONAL INJURY OR DEATH.

WARNING

TO PREVENT THE RISK OF PROPERTY DAMAGE, PERSONAL INJURY, OR DEATH, DO NOT STORE COMBUSTIBLE MATERIALS OR USE GASOLINE OR OTHER FLAMMABLE LIQUIDS OR VAPORS IN THE VICINITY OF THIS APPLIANCE.

WARNING

HIGH VOLTAGE!
INSTALLATION AND REPAIR OF THIS UNIT SHOULD BE PERFORMED ONLY BY INDIVIDUALS MEETING(AT A MINIMUM) THE REQUIREMENTS OF AN "ENTRY LEVEL TECHNICIAN" AS SPECIFIED BY THE AIR CONDITIONING, HEATING AND REFRIGERATION INSTITUTE (AHRI). ATTEMPTING TO INSTALL OR REPAIR THIS UNIT WITHOUT SUCH BACKGROUND MAY RESULT IN PRODUCT DAMAGE, PERSONAL INJURY OR DEATH.

WARNING

CARBON MONOXIDE POISONING HAZARD

FAILURE TO KEEP THIS COMPARTMENT CLOSED EXCEPT WHEN SERVICING COULD RESULT IN CARBON MONOXIDE POISONING OR DEATH.

THIS COMPARMENT MUST BE CLOSED EXCEPT WHEN SERVICING

AVERTISSEMENT

RISQUE D'EMPOISONNEMENT AU MONOXYDE DE CARBONE

SI CE COMPARTMENT N'EST PAS FERME EN TOUT TEMPS, SAUF EN CAS DE REPARATION, IL Y A RISQUE D'EMPOISONNEMENT OU MONOXYDE DE CARBONE OU DE MORT.

CE COMPARTIMENT DOIT ETRE FERME SAUF AU MOMENT DE L'ENTRETIEN.

ADVERTENCIA

PELIGRO MONÓXIDO DE CARBONO TOXICO

EL FRACASO DE NO MANTENER COMPARTIMIENTO CERRADO MENOS DURANTE, ATENDER, PODRIA TENER COMO RESULTADO ENVENENAR DE MONÓXIDO DE CARBONO O MUERTE.
ESTE COMPARTIMIENTO DEBE CERRADO MENOS AL ATENDER

0I40L00I06

GENERAL INFORMATION

WARNING

TO PREVENT PROPERTY DAMAGE, PERSONAL INJURY OR DEATH, DUE TO FIRE, EXPLOSIONS, SMOKE, SOOT, CONDENSATION, ELECTRIC SHOCK OR CARBON MONOXIDE, THIS UNIT MUST BE PROPERLY INSTALLED, REPAIRED, OPERATED, AND MAINTAINED.

This unit is approved for outdoor installation ONLY. Rated performance is achieved after 72 hours of operation. Rated performance is delivered at the specified airflow. See outdoor unit specification sheet for split system models or product specification sheet for packaged and light commercial models. Specification sheets can be found at www.goodmanmfg.com for Goodman® brand products or www.amana-hac.com for Amana® brand products. Within either website, please select the residential or commercial products menu and then select the submenu for the type of product to be installed, such as air conditioners or heat pumps, to access a list of product pages that each contain links to that model's specification sheet.

To assure that your unit operates safely and efficiently, it must be installed, operated, and maintained in accordance with these installation and operating instructions, all local building codes and ordinances, or in their absence, with the latest edition of the National Fuel Gas Code NFPA54/ANSI Z223.1 and National Standard of Canada CAN/CSA B149 Installation Codes.

The heating and cooling capacities of the unit should be greater than or equal to the design heating and cooling loads of the area to be conditioned. The loads should be calculated

by an approved method or in accordance with ASHRAE Guide or Manual J - Load Calculations published by the Air Conditioning Contractors of America.

Obtain from:

American National Standards Institute
1430 Broadway
New York, NY 10018

System design and installation should also, where applicable, follow information presented in accepted industry guides such as the ASHRAE Handbooks. The manufacturer assumes no responsibility for equipment installed in violation of any code or regulation. The mechanical installation of the packaged roof top units consists of making final connections between the unit and building services; supply and return duct connections; and drain connections (if required). The internal systems of the unit are completely factory-installed and tested prior to shipment.

Units are generally installed on a steel roof mounting curb assembly which has been shipped to the job site for installation on the roof structure prior to the arrival of the unit. The model number shown on the unit's identification plate identifies the various components of the unit such as refrigeration tonnage, heating input and voltage.

Carefully inspect the unit for damage including damage to the cabinetry. Any bolts or screws which may have loosened in transit must be re-tightened. In the event of damage, the receiver should:

1. Make notation on delivery receipt of any visible damage to shipment or container.
2. Notify carrier promptly and request an inspection.
3. In case of concealed damage, carrier should be notified as soon as possible-preferably within 5 days.
4. File the claim with the following supporting documents:
   a. Original Bill of Lading, certified copy, or indemnity bond.
   b. Original paid freight bill or indemnity in lieu thereof.
   c. Original invoice or certified copy thereof, showing trade and other discounts or reductions.
   d. Copy of the inspection report issued by carrier representative at the time damage is reported to the carrier. The carrier is responsible for making prompt inspection of damage and for a thorough investigation of each claim. The distributor or manufacturer will not accept claims from dealers for transportation damage.

NOTE: When inspecting the unit for transportation damage, remove all packaging materials. Recycle or dispose of the packaging material according to local codes.

Pre-Installation Checks

Carefully read all instructions for the installation prior to installing unit. Ensure each step or procedure is understood and any special considerations are taken into account before starting installation. Assemble all tools, hardware and supplies needed to complete the installation. Some items may need to be purchased locally.

UNIT LOCATION

⚠ WARNING

To prevent possible equipment damage, property damage, personal injury or death, the following bullet points must be observed when installing the unit.

IMPORTANT NOTE: Remove wood shipping rails prior to installation of the unit.

All Installations:

NOTE: Appliance is shipped from factory for vertical duct application.

Proper installation of the unit ensures trouble-free operation. Improper installation can result in problems ranging from noisy operation to property or equipment damages, dangerous conditions that could result in injury or personal property damage and that are not covered by the warranty. Give this booklet to the user and explain it's provisions. The user should retain these instructions for future reference.

- For proper flame pattern within the heat exchanger and proper condensate drainage, the unit must be mounted level.
- The flue outlet must be at least 12 inches from any opening through which flue gases could enter a building, and at least three feet above any forced air inlet located within ten feet. The economizer/manual fresh air intake/motorized fresh air intake and combustion air inlet mounted on the unit are not affected by this restriction.
- To avoid possible corrosion of the heat exchanger, do not locate the unit in an area where the outdoor air (i.e. combustion air for the unit) will be frequently contaminated by compounds containing chlorine or fluorine. Common sources of such compounds include swimming pool chemicals and chlorine bleaches, paint stripper, adhesives, paints, varnishes, sealers, waxes (which are not yet dried) and solvents used during construction and remodeling. Various commercial and industrial processes may also be sources of chlorine/fluorine compounds.
- To avoid possible illness or death of the building occupants, do NOT locate outside air intake device (economizer, manual fresh air intake, motorized fresh air intake) too close to an exhaust outlet, gas vent termination, or plumbing vent outlet. For specific distances required, consult local codes.
- Allow minimum clearances from the enclosure for fire protection, proper operation, and service access (see unit clearances). These clearances must be permanently maintained.
- The combustion air inlet and flue outlet on the unit must never be obstructed. If used, do not allow the economizer/manual fresh air damper/ motorized fresh air damper to become blocked by snow or debris. In

some climates or locations, it may be necessary to elevate the unit to avoid these problems.

- When the unit is heating, the temperature of the return air entering the unit must be between 50° F and 100° F.

Ground Level Installations Only:

- When the unit is installed on the ground adjacent to the building, a level concrete (or equal) base is recommended. Prepare a base that is 3" larger than the package unit footprint and a minimum of 3" thick.
- The base should also be located where no runoff of water from higher ground can collect in the unit.

Roof top Installations Only:

- To avoid possible property damage or personal injury, the roof must have sufficient structural strength to carry the weight of the unit(s) and snow or water loads as required by local codes. Consult a structural engineer to determine the weight capabilities of the roof.
- The unit may be installed directly on wood floors or on Class A, Class B, or Class C roof covering material.
- To avoid possible personal injury, a safe, flat surface for service personnel should be provided.
- As indicated on the unit data plate, a minimum clearance of 36" to any combustible material is required on the furnance access side of the unit. All combustible materials must be kept out of this area.
- This 36" clearance must also be maintained to insure proper combustion air and flue gas flow. The combustion air intake and furance flue discharge must not be blocked for any reason, including blockage by snow.
- Adequate clearances from the furnace flue discharge to any adjacent public walkways, adjacent buildings, building openings or openable windows must be maintained in accordance with the latest edition of the National Fuel Gas Code (ANSI Z223.1)
- Minimum horizontal clearance of 48" from the furnace flue discharge to any electric meters, gas meters, regulators and relief equipment is required.

Unit Precautions

- Do not stand or walk on the unit.
- Do not drill holes anywhere in panels or in the base frame of the unit. Unit access panels provide structural support.
- Do not remove any access panels until unit has been installed on roof curb or field supplied structure.
- Do not roll unit across finished roof without prior approval of owner or achitect.
- Do not skid or slide on any surface as this may damage unit base. The unit must be stored on a flat, level surface. Protect the condenser coil because it is easily damaged.

Roof Curb Installations Only:

Curb installatons must comply with local codes and should be done in accordance with the established guidelines of the National Roofing Contractors Association.

Proper unit installation requires that the roof curb be firmly and permanently attached to the roof structure. Check for adequate fastening method prior to setting the unit on the curb.

Full perimeter roof curbs are available from the factory and are shipped unassembled. Field assembly, squaring, leveling and mounting on the roof structure are the responsibility of the installing contractor. All required hardware necessary for the assembly of the sheet metal curb is included in the curb accessory.

⚠ WARNING

To prevent possible equipment damage, property damage, personal injury or death, the following bullet points must be observed when installing the unit.

- Sufficient structural support must be determined prior to locating and mounting the curb and package unit.
- Ductwork must be constructed using industry guidelines. The duct work must be placed into the roof curb before mounting the package unit. Our full perimeter curbs include duct connection frames to be assembled with the curb. Cantilevered type curbs are not available from the factory.
- Curb insulation, cant strips, flashing and general roofing material are furnished by the contractor.

The curbs must be supported on parallel sides by roof members. The roof members must not penetrate supply and return duct opening areas as damage to the unit might occur.

NOTE: The unit and curb accessories are designed to allow vertical duct installation <u>before</u> unit placement. Duct installaton <u>after</u> unit placement is not recommended.

⚠ CAUTION

All curbs look similar. To avoid incorrect curb positioning, check job plans carefully and verify markings on curb assembly. Instructions may vary in curb styles and supersedes information shown.

See the manual shipped with the roof curb for assembly and installation instructions.

CLEARANCES

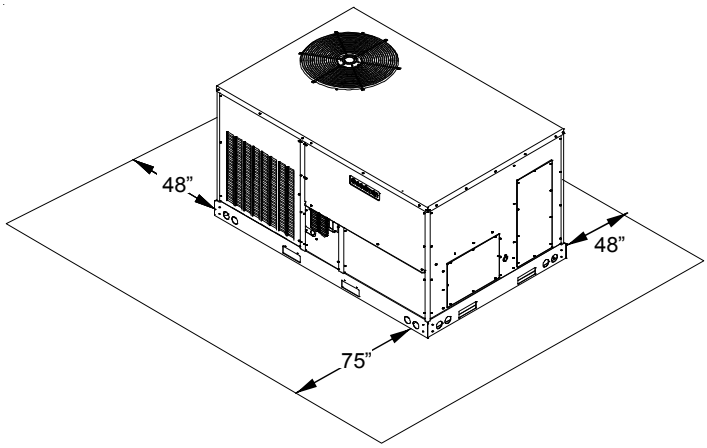

Unit Clearances

Adequate clearance around the unit should be kept for safety, service, maintenance, and proper unit operation. A total clearance of 75” on the main control panel side of the unit is recommended to facilitate possible fan shaft, coil, electric heat and gas furnace removal. A clearance of 48” is recommended on all other sides of the unit to facilitate possible compressor removal, to allow service access and to insure proper ventilation and condenser airflow. The unit must not be installed beneath any obstruction. The unit should be installed remote from all building exhausts to inhibit ingestion of exhaust air into the unit fresh air intake.

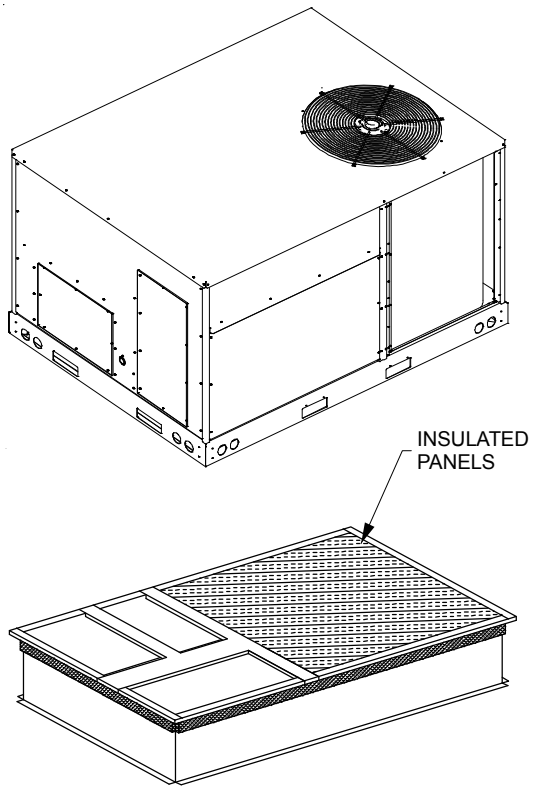

Roof Curb Installation

ROOF CURB POST-INSTALLATION CHECKS

After installation, check the top of the curb, duct connection frame and duct flanges to make sure gasket has been applied properly. Gasket should be firmly applied to the top of the curb perimeter, duct flanges and any exposed duct connection frame. If gasket is loose, re-apply using strong weather resistant adhesive.

Protrusion

Inspect curb to ensure that none of the utility services (electric) routed through the curb protrude above the curb.

⚠ CAUTION

If protrusions exist, do no attempt to set unit on curb.

ROOF TOP DUCT CONNECTIONS

Install all duct connections on the unit before placing the unit on rooftop.

Horizontal Discharge

Refer to IO-785 included in the literature pack for installing horizontal duct covers.

Flexible duct connectors between the unit and ducts are recommended. Insulate and weatherproof all external ductwork and joints as required and in accordance with local codes.

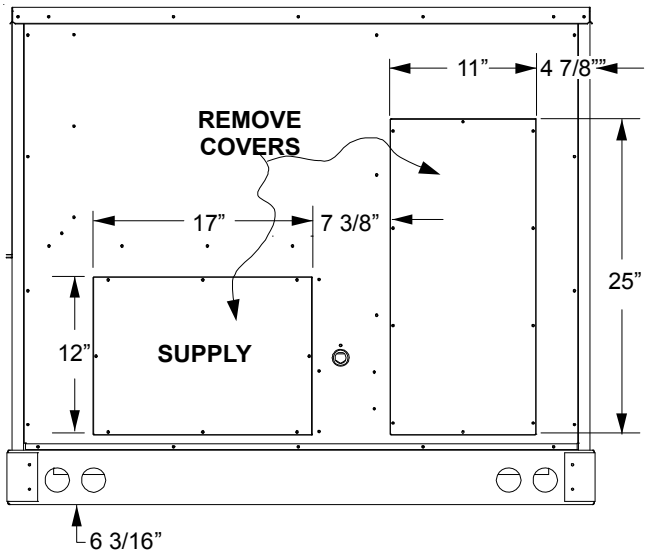

Horizontal Discharge Duct Connections

RIGGING DETAILS

WARNING

TO PREVENT PROPERTY DAMAGE, THE UNIT SHOULD REMAIN IN AN UPRIGHT POSITION DURING ALL RIGGING AND MOVING OPERATIONS. TO FACILITATE LIFTING AND MOVING WHEN A CRANE IS USED, PLACE THE UNIT IN AN ADEQUATE CABLE SLING.

CAUTION

IF UNITS ARE LIFTED TWO AT A TIME, THE FORK HOLES ON THE CONDENSER END OF THE UNIT MUST NOT BE USED. MINIMUM FORK LENGTH IS 42" TO PREVENT DAMAGE TO THE UNIT; HOWEVER, 48" IS RECOMMENDED.

Provisions for forks have been included in the unit base frame. No other fork locations are approved.

WARNING

TO PREVENT POSSIBLE EQUIPMENT DAMAGE, PROPERTY DAMAGE, PERSONAL INJURY OR DEATH, THE FOLLOWING BULLET POINTS MUST BE OBSERVED WHEN INSTALLING THE UNIT.

- Unit must be lifted by the four lifting holes located at the base frame corners.
- Lifting cables should be attached to the unit with shackles.
- The distance between the crane hook and the top of the unit must not be less than 60".
- Two spreader bars must span over the unit to prevent damage to the cabinet by the lift cables. Spreader bars must be of sufficient length so that cables do not come in contact with the unit during transport. Remove wood struts mounted beneath unit base frame before setting unit on roof curb. These struts are intended to protect unit base frame from fork lift damage. Removal is accomplished by extracting the sheet metal retainers and pulling the struts through the base of the unit. Refer to rigging label on the unit.

Important: If using bottom discharge with roof curb, ductwork should be attached to the curb prior to installing the unit. Ductwork dimensions are shown in Roof Curb Installation Instructions.

Refer to the Roof Curb Installation Instructions for proper curb installation. Curbing must be installed in compliance with the National Roofing Contractors Association Manual.

Lower unit carefully onto roof mounting curb. While rigging unit, center of gravity will cause condenser end to be lower than supply air end.

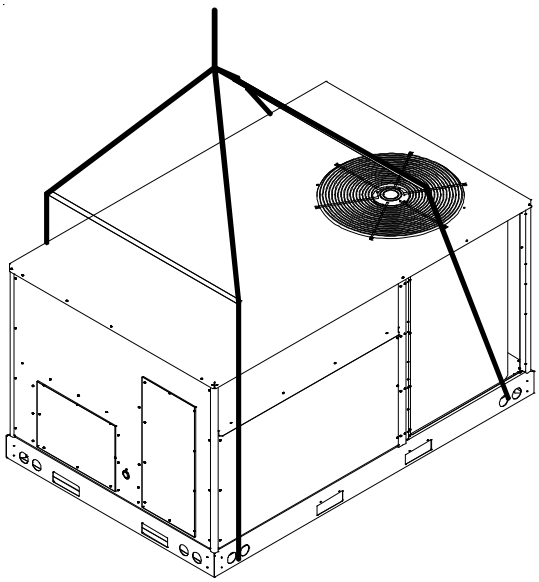

To assist in determining rigging requirements, unit weights are shown as follows:

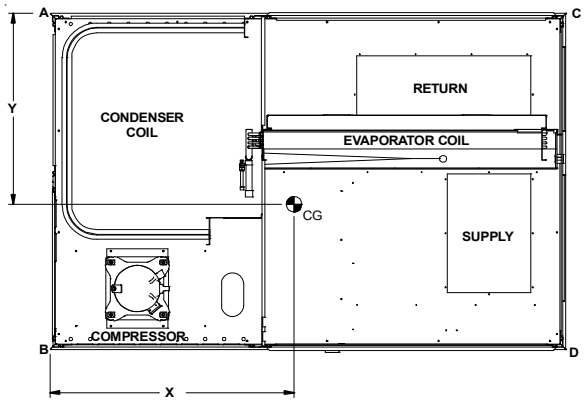

Corner & Center of Gravity Locations

TABLE TO BE USED FOR B* MODELS

B* Model	X (in)	Y (in)	Shipping Weight (lbs)	Operating Weight (lbs)	Corner Weights (lbs)			
					A	B	C	D
CPG036045*	37	30	550	525	100	165	100	165
CPG036090*	37	30	560	535	100	170	100	170
CPG048090*	37	30	600	575	110	180	110	180
CPG048115*	37	30	605	580	110	180	110	180
CPG060090*	37	30	645	620	115	190	120	195
CPG060140*	37	30	655	630	120	195	120	195
CPG072140*	37	30	715	690	130	215	130	215

**** Weights shown are belt drive with no accessories.***

TABLE TO BE USED FOR C* AND LATER MODELS

Model	X (in)	Y (in)	Shipping Weight (lbs)	Operating Weight (lbs)	Corner Weights (lbs)			
					A	B	C	D
CPG060090*	37	30	635	610	113	187	118	192
CPG060140*	37	30	645	620	118	192	118	192
CPG072140*	37	30	700	675	127	210	127	211

**** Weights shown are belt drive with no accessories.***

⚠ CAUTION

TO PREVENT SEVERE DAMAGE TO THE BOTTOM OF THE UNIT, DO NOT FORK LIFT UNIT AFTER WOOD STRUTS HAVE BEEN REMOVED.

Bring condenser end of unit into alignment with the curb. With condenser end of the unit resting on curb member and using curb as a fulcrum, lower opposite end of the unit until entire unit is seated on the curb. When a rectangular cantilever curb is used, care should be taken to center the unit. Check for proper alignment and orientation of supply and return openings with duct.

RIGGING REMOVAL

⚠ CAUTION

TO PREVENT DAMAGE TO THE UNIT, DO NOT ALLOW CRANE HOOKS AND SPREADER BARS TO REST ON THE ROOF OF THE UNIT.

Remove spreader bars, lifting cables and other rigging equipment.

ELECTRICAL WIRING

WARNING

HIGH VOLTAGE!
DISCONNECT ALL POWER BEFORE SERVICING OR INSTALLING THIS UNIT. MULTIPLE POWER SOURCES MAY BE PRESENT. FAILURE TO DO SO MAY CAUSE PROPERTY DAMAGE, PERSONAL INJURY OR DEATH.

WARNING

HIGH VOLTAGE!
TO AVOID PERSONAL INJURY OR DEATH DUE TO ELECTRICAL SHOCK, DO NOT TAMPER WITH FACTORY WIRING. THE INTERNAL POWER AND CONTROL WIRING OF THESE UNITS ARE FACTORY-INSTALLED AND HAVE BEEN THOROUGHLY TESTED PRIOR TO SHIPMENT. CONTACT YOUR LOCAL REPRESENTATIVE IF ASSISTANCE IS REQUIRED.

CAUTION

TO PREVENT DAMAGE TO THE WIRING, PROTECT WIRING FROM SHARP EDGES. FOLLOW NATIONAL ELECTRICAL CODE AND ALL LOCAL CODES AND ORDINANCES. DO NOT ROUTE WIRES THROUGH REMOVABLE ACCESS PANELS.

CAUTION

CONDUIT AND FITTINGS MUST BE WEATHER-TIGHT TO PREVENT WATER ENTRY INTO THE BUILDING.

For unit protection, use a fuse or HACR circuit breaker that is in excess of the circuit ampacity, but less than or equal to the maximum overcurrent protection device. DO NOT EXCEED THE MAXIMUM OVERCURRENT DEVICE SIZE SHOWN ON UNIT DATA PLATE.

All line voltage connections must be made through weatherproof fittings. All exterior power supply and ground wiring must be in approved weatherproof conduit.

The main power supply wiring to the unit and low voltage wiring to accessory controls must be done in accordance with these instructions, the latest edition of the National Electriacl Code (ANSI/NFPA 70), and all local codes and ordinances. All field wiring shall conform with the temperature limitations for Type T wire (63°F/35°C rise).

The main power supply for the CPG036XXX3,4,7 through CPG072 shall be three-phase, three wire. The power supply for the CPG036XXX1 through CPG060 shall be single-phase, two wire. The unit is factory wired for the voltage shown on the unit's data plate.

NOTE: If supply voltage is 208V, lead on primary of transformer TRANS1 must be moved from the 230V to the 208V tap.

Main power wiring should be sized for the minimum wire ampacity shown on the unit's database. Size wires in accordance with the ampacity tables in Article 310 of the National Electrical Code. If long wires are required, it may be necessary to increase the wire size to prevent excessive voltage drop. Wires should be sized for a maximum of 3% voltage drop.

CAUTION

TO AVOID PROPERTY DAMAGE OR PERSONAL INJURY DUE TO FIRE, USE ONLY COPPER CONDUCTORS.

CAUTION

TO PREVENT IMPROPER AND DANGEROUS OPERATION DUE TO WIRING ERRORS, LABEL ALL WIRES PRIOR TO DISCONNECTION WHEN SERVICING CONTROLS. VERIFY PROPER OPERATION AFTER SERVICING.

NOTE: A weather-tight disconnect switch, properly sized for the unit total load, must be field installed. An external field supplied disconnect may be mounted on the exterior panel.

Ensure the data plate is not covered by the field-supplied disconnect switch.

- Some disconnect switches are not fused. Protect the power leads at the point of distribution in accordance with the unit data plate.
- The unit must be electrically grounded in accordance with local codes or, in the absence of local codes, with the latest edition of the National Electrical Code (ANSI-NFPA 70). A ground lug is provided for this purpose. Size grounding conductor in accordance with Table 250-95 of the National Electrical Code. Do not use the ground lug for connecting a neutral conductor.
- Connect power wiring to the compressor contactor closest to the entrance located within the main control box.

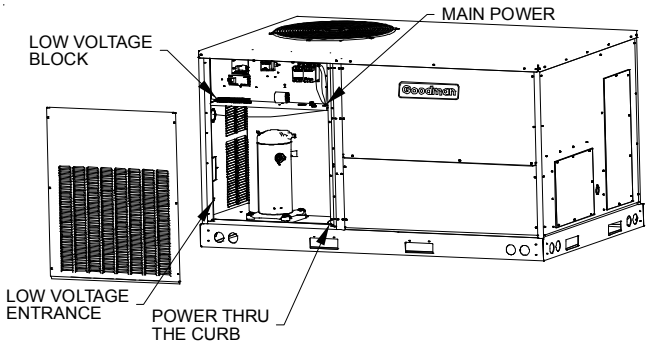

Power and Low Voltage Block Connections

WARNING

FAILURE OF UNIT DUE TO OPERATION ON IMPROPER LINE VOLTAGE OR WITH EXCESSIVE PHASE UNBALANCE CONSTITUTES PRODUCT ABUSE AND WILL VOID YOUR WARRANTY AND MAY CAUSE SEVERE DAMAGE TO THE UNIT ELECTRICAL COMPONENTS.

Areas Without Convenience Outlet

It is recommended that an independant 115V power source be brought to the vicinity of the roof top unit for portable lights and tools used by the service mechanic.

Units installed on Roof Tops

Main power and low voltage wiring may enter the unit through the condenser end of unit or through the roof curb. Install conduit connectors at the desired entrance locations. External connectors must be weatherproof. All holes in the unit base must be sealed (including those around conduit nuts) to prevent water leakage into building. All required conduit and fittings are to be field supplied.

Supply voltage to roof top unit must not vary by more than 10% of the value indicated on the unit data plate. Phase voltage unbalance must not exceed 2%. Contact your local power company for correction of improper voltage or phase unbalance.

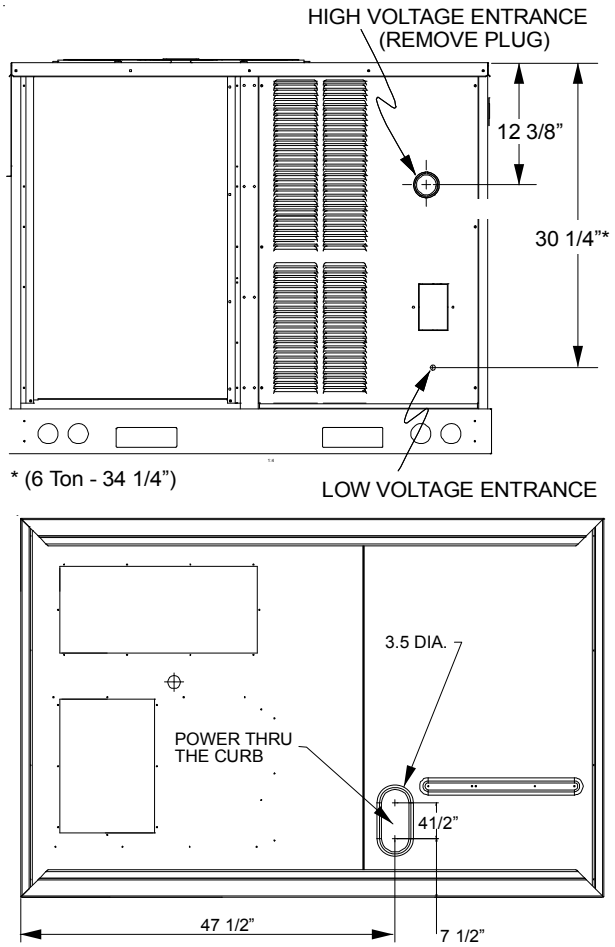

Electrical Entrance and Thru Curb

Unit is equipped with a Low Voltage Terminal Block and has Single Point wiring to the contactor.

Low Voltage Control Wiring

1. A 24V thermostat must be installed for unit operation. It may be purchased with the unit or field -supplied. Thermostats may be programmable or electromechanical as required.
2. Locate thermostat or remote sensor in the conditioned space where it will sense average temperature. Do not locate the device where it may be directly exposed to supply air, sunlight or other sources of heat. Follow installation instructions packaged with the thermostat.
3. Use #18 AWG wire for 24V control wiring runs not exceeding 75 feet. Use #16 AWG wire for 24V control wiring runs not exceeding 125 feet. Use #14 AWG wire for 24V control wiring runs not exceeding 200 feet. Low voltage wiring may be National Electrical Code (NEC) Class 2 where permitted by local codes.
4. Route thermostat wires from sub-base terminals to the unit. Control wiring should enter through the condenser end of unit or through curb. Connect thermostat and any accessory wiring to low voltage terminal block TB1 in the main control box.

NOTE: Field-supplied conduit may need to be installed depending on unit/curb configuration. Use #18 AWG solid conductor wire whenever connecting thermostat wires to terminals on sub-base. DO NOT use larger than #18 AWG wire. A transition to #18 AWG wire may be required before entering thermostat sub-base.

NOTE: Refer to unit wiring diagrams for thermostat hookups.

GAS SUPPLY PIPING

⚠ WARNING

To prevent personal injury or death due to improper installation, adjustment, alteration, service or maintenance, refer to this manual. For additional assistance or information, consult a qualified installer, service agency or the gas supplier.

IMPORTANT NOTE: This unit is factory set to operate on natural gas at the altitudes shown on the rating plate.

⚠ WARNING

To avoid property damage, personal injury or death when either using propane gas alone or at higher altitudes, obtain and install the proper conversion kit(s). Failure to do so can result in unsatisfactory operation and/or equipment damage. High altitude kits are for U.S. Installations only and are not approved for use in Canada.

The rating plate is stamped with the model number, type of gas and gas input rating. Make sure the unit is equipped to operate on the type of gas available. Conversion to propane (LP) gas is permitted with the use of the factory authorized conversion kit (see the unit Technical Manual for the appropriate kit). For High Altitude derates, refer to the latest edition of the National Fuel Gas Code NFPA 54/ANSI Z223.1.

INLET GAS PRESSURE	
NATURAL	Min. 5.0" W.C., Max. 10.0" W.C.
PROPANE	Min. 11.0" W.C., Max. 14.0" W.C.

Inlet Gas Pressure Must Not Exceed the Maximum Value Shown in Table Above.

The minimum supply pressure should not vary from that shown in the table above because this could prevent the unit from having dependable ignition. In addition, gas input to the burners must not exceed the rated input shown on the rating plate. Overfiring of the unit could result in premature heat exchanger failure.

Piping

IMPORTANT NOTE: To avoid possible unsatisfactory operation or equipment damage due to under firing of equipment, do not undersize the natural/propane gas piping from the meter/tank to the unit. When sizing a trunk line, include all appliances on that line that could be operated simultaneously.

The rating plate is stamped with the model number, type of gas and gas input rating. Make sure the unit is equipped to operate on the type of gas available. The gas line installation must comply with local codes, or in the absence of local codes, with the latest edition of the National Fuel Gas Code NFPA 54/ANSI Z223.1.

Natural Gas Connection

Natural Gas Capacity of Pipe in Cubic Feet of Gas Per Hour (CFH)					
Length of Pipe in Feet	Nominal Black Pipe Size (inches)				
	1/2	3/4	1	1 1/4	1 1/2
10	132	278	520	1050	1600
20	92	190	350	730	1100
30	73	152	285	590	980
40	63	130	245	500	760
50	56	115	215	440	670
60	50	105	195	400	610
70	46	96	180	370	560
80	43	90	170	350	530
90	40	84	160	320	490
100	38	79	150	305	460

Pressure = .50 PSIG or less and Pressure Drop of 0.3" W.C. (Based on 0.60 Specific Gravity Gas)

$$\text{CFH} = \frac{\text{BTUH Furnace Input}}{\text{Heating Value of Gas (BTU/Cubic Foot)}}$$

Refer to the Proper Piping Practice drawing for the general layout at the unit. The following rules apply:

1. Use black iron pipe and fittings for the supply piping. The use of a flex connector and/or copper piping is permitted as long as it is in agreement with local codes.
2. Use pipe joint compound on male threads only. Pipe joint compound must be resistant to the action of the fuel used.
3. Use ground joint unions.
4. Install a drip leg to trap dirt and moisture before it can enter the gas valve. The drip leg must be a minimum of three inches long.
5. Use two pipe wrenches when making connection to the gas valve to keep it from turning.
6. Install a manual shut-off valve in a convenient location (within six feet of unit) between the meter and the unit.
7. Tighten all joints securely.
8. The unit must be connected to the building piping by one of the following methods:

- Rigid metallic pipe and fittings
- Semirigid metallic tubing and metallic fittings (Aluminum alloy tubing must not be used in exterior locations)
- Listed gas appliance connectors used in accordance with the terms of their listing that are completely in the same room as the equipment
- In the prior two methods above the connector or tubing must be protected from physical and thermal damage. Aluminum alloy tubing and connectors must be coated to protect against external corrosion when in contact with masonry, plaster or insulation or are subject to repeated wettings by liquids (water - not rain water, detergents or sewage).

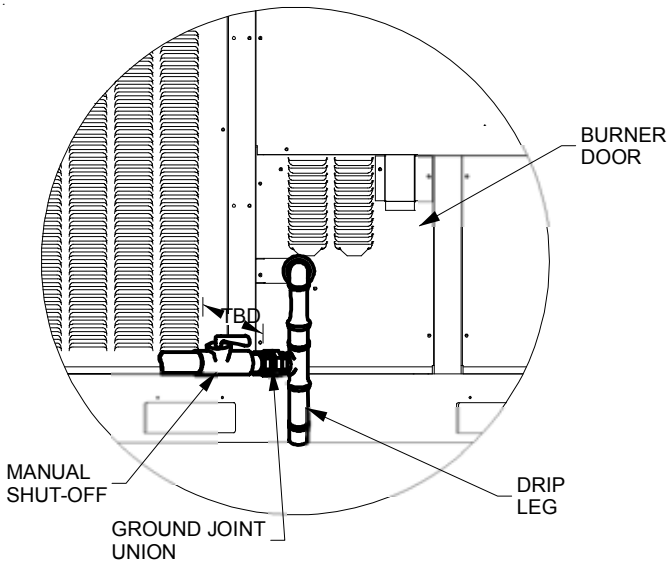

Proper Piping Practice

NOTE: The unit gas supply entrance is factory sealed with plugs. Keep plugs in place until gas supply is ready to be installed. Once ready, replace the plugs with the supplied grommets and install gas supply line.

Gas Piping Checks

CAUTION

To prevent property damage or personal injury due to fire, the following instructions must be performed regarding gas connections and pressure testing:

- The unit and its gas connections must be leak tested before placing in operation. Because of the danger of explosion or fire, never use a match or open flame to test for leaks. Never exceed specified pressures for testing. Higher pressure may damage gas valve and cause overfiring which may result in premature heat exchange failure.
- This unit and its shut-off valve must be disconnected from the gas supply during any pressure testing of that system at test pressures in excess of 1/2 PSIG (3.48 kPa).
- This unit must be isolated from the gas supply system by closing its manual shut-off valve during any pressure testing of the gas supply piping system at test pressures equal to or less than 1/2 PSIG (3.48 kPa).

WARNING

To avoid property damage or personal injury, be sure there is no open flame in the vicinity during air bleeding.

There will be air in the gas supply line after testing for leaks on a new installation. Therefore, the air must be bled from the line by loosening the ground joint union until pure gas is expelled. Tighten union and wait for five minutes until all gas has been dissipated in the air. Be certain there is no open flame in the vicinity during air bleeding procedure. The unit is placed in operation by closing the main electrical disconnect switch for the unit.

PROPANE GAS INSTALLATIONS

WARNING

To avoid property damage, personal injury or death due to fire or explosion caused by a propane gas leak, install a gas detecting warning device. Since rust can reduce the level of odorant in propane gas, a gas detecting warning device is the only reliable way to detect a propane gas leak. Contact a local propane gas supplier about installing a gas detecting warning device.

IMPORTANT NOTE: Propane gas conversion kits must be installed to convert units to propane gas. NOx screens must be removed before converting to LP. Remove burner assembly and pull NOx screens from each burner tube. When all the screens are out, reassemble the burner assembly without the screens.

All propane gas equipment must conform to the safety standards of the National Board of Fire Underwriters (See NBFU Manual 58).

For satisfactory operation, propane gas supply pressure must be within 9.7 - 10.3 inches W.C. at the manifold with all gas appliances in operation. Maintaining proper gas pressure depends on three main factors:

1. Vaporization rate, which depends on (a) temperature of the liquid, and (b) wetted surface area of the container or containers.
2. Proper pressure regulation.
3. Pressure drop in lines between regulators, and between second stage regulator and the appliance. Pipe size required will depend on length of pipe run and total load of all appliances.

Tanks and Piping

Complete information regarding tank sizing for vaporization, recommended regulator settings and pipe sizing is available from most regulator manufacturers and propane gas suppliers.

Since propane gas will quickly dissolve white lead or most standard commercial compounds, special pipe dope must be used. Shellac base compounds resistant to the actions of liquefied petroleum gases such as Gasolac®, Stalactic®, Clyde's® or John Crane® are satisfactory.

See below for typical propane gas piping.

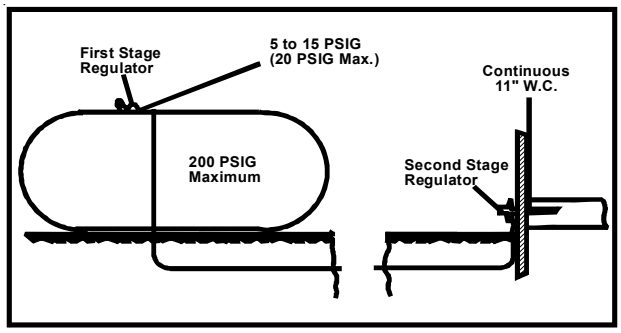

Typical Propane Gas Piping

Roof Top Location and Installation

The gas supply piping location and installation for roof top units must be in accordance with local codes or, in the absence of locals codes, with ordinances of the latest edition of the National Fuel Gas Code (ANSI Z223.1).

A manual gas shutoff valve must be field installed external to the roof top unit. In addition, a drip leg must be installed near the inlet connection. A ground joint union connection is required between the external shutoff valve and the unit connection to the gas valve to permit removal of the burner assembly for servicing.

1. Route gas piping to unit so that it does not interfere with the removal of access panels. Support and align piping to prevent strains or misalignment of the manifold assembly.
2. All units are furnished with standard female NPT pipe connections. Connection pipe sizes for CPG036 through 072 units is 1/2" NPT on 045 to 140 mBH units. The size of the gas supply piping to the unit must be based on length of run, number of units on the system, gas characteristics, BTU requirement and available supply pressure. All piping must be done in accordance with local codes or, in the absence of local codes, with the latest edition of the National Fuel Gas Code (ANSI Z223.1).

NOTE: The gas connection size at the unit does NOT establish the size of the supply line.

3. These units are designed for either natural or propane (LP) gas and are specifically constructed at the factory for only one of these fuels. The fuels are NOT interchangeable. However, the furnace can be converted in the field from natural gas to LP gas with the appropriate factory kit (see unit Technical Manual for the appropriate kit). Only a qualified contractor, experienced with natural and propane gas systems, should attempt conversion. Kit instructions must be followed closely to assure safe and reliable unit operation.
4. With all units on a common line operating under full fire, natural gas main supply pressure should be adjusted to approximately 7.0" w.c., measured at the unit gas valve. If the gas pressure at the unit is greater than 10.5" w.c., the contractor must furnish and install an external type positive shutoff service pressure regulator. The unit will not function satisfactorily if supply gas pressure is less than 5.5" w.c. or greater than 10.5" w.c..

   NOTE: A minimum horizontal distance of 48" between the regulator and the furnace flue discharge is required.
5. With all units on a common line operating under full LP gas main supply pressure should be at least 11.0" w.c. and must be no greater than 13.0" w.c., measured at the unit gas valve. Unit will not function satisfactorily if supply gas pressure is less than 11.0" w.c. or greater than 13.0" w.c..
6. All pipe connections should be sealed with a pipe thread compound, which is resistant to the fuel used with the furnace. A soapy water solution should be used to check all joints for leaks. A tap is located on the entering side of the gas valve for test gauge connection to measure supply (main) gas pressure. Another tap is provided on the manifold side of the gas valve for checking manifold pressure.

⚠ WARNING

THIS UNIT AND ITS INDIVIDUAL SHUTOFF VALVE MUST BE DISCONNECTED FROM THE GAS SUPPLY SYSTEM DURING ANY PRESSURE TESTING OF THAT SYSTEM AT TEST PRESSURES IN EXCESS OF 1/2 PSIG (13.8" W.C.).

⚠ CAUTION

THIS UNIT MUST BE ISOLATED FROM THE GAS SUPPLY PIPING SYSTEM BY CLOSING ITS INDIVIDUAL MANUAL SHUTOFF VALVE DURING ANY PRESSURE TESTING EQUAL TO OR LESS THAN 1/2 PSIG.

7. There must be no obstruction to prevent the flow of combustion and ventilating air. A vent stack is not required and must never be used. The power venter will supply an adequate amount of combustion air as long as the air passageways are kept free of any obstructions and the recommended external unit clearances are maintained.

CIRCULATING AIR AND FILTERS

Ductwork

The supply duct should be provided with an access panel large enough to inspect the air chamber downstream of the heat exchanger. A cover should be tightly attached to prevent air leaks.

Ductwork dimensions are shown in the roof curb installation manual.

If desired, supply and return duct connections to the unit may be made with flexible connections to reduce possible unit operating sound transmission.

VENTING

NOTE: Venting is self-contained.

CONDENSATE DRAIN CONNECTION

Condensate Drain Connection

A 3/4" NPT drain connection is supplied for condensate piping. An external trap must be installed for proper condensate drainage.

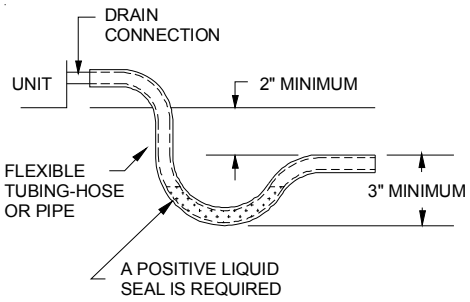

Drain Connection

Install condensate drain trap as shown. Use 3/4" drain line and fittings or larger. Do not operate without trap.

Horizontal Drain

Drainage of condensate directly onto the roof may be acceptable; refer to local code. It is recommended that a small drip pad of either stone, mortar, wood or metal be provided to prevent any possible damage to the roof.

Cleaning

Due to the fact that drain pans in any air conditioning unit will have some moisture in them, algae and fungus will grow due to airborne bacteria and spores. Periodic cleaning is necessary to prevent this build-up from plugging the drain.

STARTUP, ADJUSTMENTS, AND CHECKS

⚠ WARNING

HIGH VOLTAGE!
TO AVOID PERSONAL INJURY OR DEATH DUE TO ELECTRICAL SHOCK, BOND THE FRAME OF THIS UNIT TO THE BUILDING ELECTRICAL GROUND BY USE OF THE GROUNDING TERMINAL PROVIDED OR OTHER ACCEPTABLE MEANS. DISCONNECT ALL POWER BEFORE SERVICING OR INSTALLING THIS UNIT.

PRE-STARTUP INSTRUCTIONS

⚠ CAUTION

TO PREVENT PROPERTY DAMAGE OR PERSONAL INJURY, DO NOT START THE UNIT UNTIL ALL NECESSARY PRE-CHECKS AND TESTS HAVE BEEN PERFORMED.

Prior to the beginning of Startup, Adjustments, and Checks procedures, the following steps should be completed in the building.

THERMOSTAT. Set the thermostat in the conditioned space at a point at least 10°F below zone temperature. Set the thermostat system switch on COOL and the fan switch on AUTO.

⚠ WARNING

MOVING MACHINERY HAZARD!
TO PREVENT POSSIBLE PERSONAL INJURY OR DEATH, DISCONNECT POWER TO THE UNIT AND PADLOCK IN THE "OFF" POSITION BEFORE SERVICNG FANS.

HEATING STARTUP

This unit is equipped with an electronic ignition device to automatically light the main burners. It also has a power vent blower to exhaust combustion products.

On new installations, or if a major component has been replaced, the operation of the unit must be checked.

Check unit operation as outlined in the following instructions. If any sparking, odors, or unusual sounds are encountered, shut off electrical power and recheck for wiring errors, or obstructions in or near the blower motors. **Duct covers must be removed before operating unit.**

The Startup, Adjustments, and Checks procedure provides a step-by-step sequence which, if followed, will assure the proper startup of the equipment in the minimum amount of time. Air balancing of duct system is not considered part of this procedure. However, it is an important phase of any air conditioning system startup and should be performed upon completion of the Startup, Adjustments, and Checks procedure. The Startup, Adjustments, and Checks procedure at outside ambients below 55°F should be limited to a readiness check of the refrigeration system with the required final check and calibration left to be completed when the outside ambient rises above 55°F.

TOOLS REQUIRED

Refrigeration gauge and manifold
Voltmeter
Clamp-on ammeter
Ohmmeter
Test lead
(Minimum #16 AWG with insulated alligator clips)
Manometer for verifying gas pressure 0 to 20" w.c.
Air temperature measuring device
General refrigeration mechanics' tools

TEMPORARY HEATING OR COOLING

If the unit is to be used for temporary heating or cooling, a "Startup, Adjustments, and Checks" must first be performed in accordance with this manual. Failure to comply with this requirement will void the warranty. **After** the machines are used for temporary heating or cooling, inspect the coils, fans, and motors for unacceptable levels of construction dust and dirt and install new filters.

CONTRACTOR RESPONSIBILITY

The installing contractor must be certain that:

- All supply and return air ductwork is in place and corresponds with installation instructions.
- All thermostats are mounted and wired in accordance with installation instructions.
- All electric power, all gas, hot water or steam line connections, and the condensate drain installation have been made to each unit on the job. These main supply lines must be functional and capable of operating all units simultaneously.

ROOF CURB INSTALLATION CHECK

Inspect the roof curb for correct installation. The unit and curb assembly should be level. Inspect the flashing of the roof mounting curb to the roof, especially at the corners, for good workmanship. Also check for leaks around gaskets. Note any deficiencies in a separate report and forward to the contractor.

OBSTRUCTIONS, FAN CLEARANCE AND WIRING

Remove any extraneous construction and shipping materials that may be found during this procedure. Rotate all fans manually to check for proper clearances and that they rotate freely. Check for bolts and screws that may have jarred loose during shipment to the jobsite. Retighten if necessary. Retighten all electrical connections.

PRE-STARTUP PRECAUTIONS

It is important to your safety that the unit has been properly grounded during installation. Check ground lug connection in main control box for tightness prior to closing circuit breaker or disconnect switch. Verify that supply voltage on line side of disconnect agrees with voltage on unit identification plate and is within the utilization voltage range as indicated in Appendix C Electrical Data.

System Voltage - That nominal voltage value assigned to a circuit or system for the purpose of designating its voltage class.

Nameplate Voltage - That voltage assigned to a piece of equipment for the purpose of designating its voltage class and for the purpose of defining the minimum and maximum voltage at which the equipment will operate.

Utilization Voltage - The voltage of the line terminals of the equipment at which the equipment must give fully satisfactory performance. Once it is established that supply voltage will be maintained within the utilization range under all system conditions, check and calculate if an unbalanced condition exists between phases. Calculate percent voltage unbalance as follows.

Three Phase Models Only

$$\text{3) PERCENT VOLTAGE UNBALANCE} = 100 \times \frac{\text{2) MAXIMUM VOLTAGE DEVIATIONS FROM AVERAGE VOLTAGE}}{\text{1) AVERAGE VOLTAGE}}$$

HOW TO USE THE FORMULA:
EXAMPLE: With voltage of 220, 216, and 213
1) Average Voltage = 220+216+213=649 / 3 = 216
2) Maximum Voltage Deviations from Average Voltage = 220 - 216 = 4

$$\text{3) Percent Voltage Unbalance} = 100 \times \frac{4}{216} = \frac{400}{216} = 1.8\%$$

Percent voltage unbalance MUST NOT exceed 2%.

Field Duct Connections

Verify that all duct connections are tight and that there is no air bypass between supply and return.

Control Voltage Check

With disconnect switch in the open "OFF" position, disconnect blue wire from low voltage transformer TRANS1. Close the disconnect switch to energize TRANS1 control transformer. Check primary and secondary (24V) of control transformer TRANS1.

Thermostat Preliminary Check

With disconnect switch open and blue wire disconnected from TRANS1 transformer, attach one lead of ohmmeter to terminal R on TB1 terminal block. Touch, in order, the other ohmmeter lead to terminals Y1, Y2 and G at TB1 terminal block. There must be continuity from terminal R to terminals Y and G. R to Y indicates cool. R to G indicates fan (auto). Replace blue wire on TRANS1 transformer.

Filter Section Check

Remove filter section access panels and check that filters are properly installed. Note airflow arrows on filter frames.

BELT DRIVE MODELS ONLY

Bearing Check

Prior to energizing any fans, check and make sure that all setscrews are tight so that bearings are properly secured to shafts.

Set Evaporator Fan Rpm

Actual RPM's must be set and verified with a tachometer or strobe light. Refer to Appendices A and B for basic unit fan RPM. Refer also to "Airflow" section of this manual. With disconnect switch open, disconnect thermostat wires from terminals Y and W. This will prevent heating and mechanical cooling from coming on. Place a jumper wire across terminals R and G at TB1 terminal block. Close disconnect switch; evaporator fan motor will operate so RPM can be checked.

For gas heat units, the airflow must be adjusted so that the air temperature rise falls within the ranges given stated on Data Plate (see Appendix A - Blower Performance).

Tension and Alignment Adjustment

Correct belt tension is very important to the life of your belt. Too loose a belt will shorten its life; too tight, premature motor and bearing failure will occur. Check you belt drive for adequate "run-in" belt tension by measuring the force required to deflect the belt at the midpoint of the span length. Belt tension force can be measured using a belt tension gauge, available through most belt drive manufacturers.

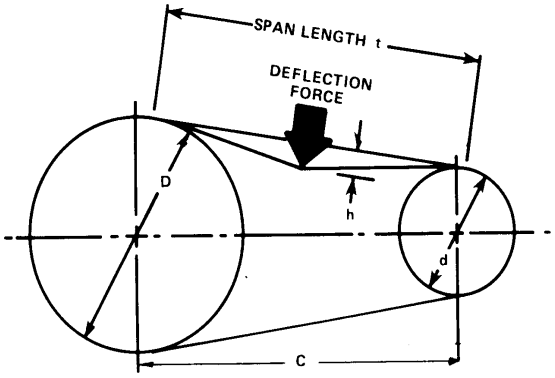

Belt Tension Adjustment

t = Span length, inches
C = Center distance, inches
D = Larger sheave diameter, inches
d = Smaller sheave diameter, inches
h = Deflection height, inches

TYPE		SMALL SHEAVE DIAMETER (in)	DEFLECTION FORCE (lbs)		DEFLECTION (in)
BELT	DRIVE		USED	NEW	
AX	Standard	3.0 to 4.0	4.2 ± 0.5	5.5 ± 0.5	0.313

Recommended Pounds of Force Per Belt

New V-belts will drop rapidly during the first few hours of use. Check tension frequently during the first 24 hours of operation. Tension should fall between the minimum and maximum force. To determine the deflection distance from a normal position, measure the distance from sheave to sheave using a straightedge or a cord. This is your reference line. On multiple belt drives, an adjacent undeflected belt can be used as a reference.

Evaporator Fan Rotation Check (Three Phase Models Only)

Check that fan rotates clockwise when viewed from the drive side of unit and in accordance with rotation arrow shown on blower housing. If it does not, reverse any two incoming power cables at Single Point Power Block. In this case, repeat bearing check.

Do not attempt to change load side wiring. Internal wiring assures all motors and compressors will rotate in correct direction once evaporator fan motor rotation check has been made.

Electrical Input Check

Make preliminary check of evaporator fan ampere draw and verify that motor nameplate amps are not exceeded. A final check of amp draw should be made upon completion of air balancing of the duct system (see Appendix C).

Restoring Connections

With disconnect switch open, remove jumper wire from terminals R and G at TB1 terminal block, and reconnect thermostat wires to terminals Y and W.

Refrigeration System Checks

Ensure the hold-down bolts on the compressor are secure and have not vibrated loose during shipment. Check that vibration grommets have been installed. Visually check all piping and clamps. The entire refrigeration system has been factory charged and tested, making it unnecessary to field charge. Factory charges are shown in Appendix C and on the unit nameplate.

Install service manifold hoses. Gauges should read saturation pressure corresponding to ambient temperature. Charge should be checked to obtain 12° to 15° of sub-cooling per system (i.e. compressor circuits).

Rollout Protection Control

The rollout protection device opens, cutting power to the gas valve, if the flames from the burners are not properly drawn into the heat exchanger. The rollout protection device is located on the burner bracket. The reason for elevated temperatures at the control should be determined and repaired prior to resetting this manual reset control.

⚠ WARNING

To avoid property damage, personal injury or death due to fire or explosion, a qualified servicer must investigate the reason for the rollout protection device to open before manually resetting the rollout protection device.

Secondary Limit Control

The secondary limit control is located on the top of the blower scroll assembly. This control opens when elevated temperatures are sensed. Elevated temperatures at the control are normally caused by blower failure. The reason for the opening should be determined and repaired prior to resetting.

If the power to the unit is interrupted during the heating cycle, it may cause the secondary limit to trip. Once the blower compartment temperature drops below the limit reset temperature, the limit will automatically reset. The unit will restart after one (1) hour.

Pre-Operation Checks

1. Close the manual gas valve external to the unit.
2. Turn off the electrical power supply to the unit.
3. Set the room thermostat to its lowest possible setting.
4. Remove the heat exchanger door on the side of the unit by removing screws.
5. This unit is equipped with an ignition device which automatically lights the main burner. DO NOT try to light burner by any other method.
6. Move the gas control valve switch to the OFF position. Do not force.
7. Wait five minutes to clear out any gas.
8. Smell for gas, including near the ground. This is important because some types of gas are heavier than air. If you have waited five minutes and you do smell gas, immediately follow the warnings on page 3 of this manual. If having waited for five minutes and no gas smell is noted, move the gas control valve switch to the ON position.
9. Replace the heat exchanger door on the side of the unit.
10. Open the manual gas valve external to the unit.
11. Turn on the electrical power supply to the unit.
12. Set the thermostat to desired setting.

Gas Supply And Manifold Check

Gas supply pressure and manifold pressure with the burners operating must be as specified on the rating plate.

Gas Inlet Pressure Check

Gas inlet pressure must be checked and adjusted in accordance to the type of fuel being consumed.

With Power And Gas Off:

1. Connect a water manometer or adequate gauge to the inlet pressure tap of the gas valve.
   Inlet gas pressure can also be measured by removing the cap from the dripleg and installing a predrilled cap with a hose fitting.

With Power And Gas On:

2. Put unit into heating cycle and turn on all other gas consuming appliances.

INLET GAS PRESSURE	
NATURAL	Min. 5.0" W.C., Max. 10.0" W.C.
PROPANE	Min. 11.0" W.C., Max. 14.0" W.C.

NOTE: Inlet Gas Pressure Must Not Exceed the Maximum Value Shown.

If operating pressures differ from above, make necessary pressure regulator adjustments, check piping size, etc., and/or consult with local utility.

Manifold Pressure Check

The gas valve has a tapped opening to facilitate measurement of the manifold pressure. A “U” Tube manometer having a scale range from 0 to 12 inches of water should be used for this measurement. The manifold pressure must be measured with the burners operating.

1. With disconnect switch open, remove field connected thermostat wire from terminal R, W1 and W2 on TB1. Place jumper wire between R, W1 and W2 to engage high stage heat. (note on 045 kbtu/hr units W2 is not used, only jumper R to W1).
2. See Figure in input rating section for gas valve adjustment.

To adjust the pressure regulator, remove the adjustment screw or cover on the gas valve. Turn out (counterclockwise) to decrease pressure, turn in (clockwise) to increase pressure. Only small variations in gas flow should be made by means of the pressure regulator adjustment. In no case should the final manifold pressure vary more than plus or minus 0.3 inches water column from the specified nominal pressure. Any major changes in flow should be made by changing the size of the burner orifices. The measured input rate to the furnace must not exceed the rating specified on the unit rating plate.

For natural gas, the high stage manifold pressure must be between 3.2 and 3.8 inches water column (3.5 nominal). Low stage manifold pressure must be between 1.7 to 2.3 inches water column (2.0 nominal).

3. To set low fire rate on 090, 115 and 140 kbtu/hr: Open disconnect switch, and remove jumper from R to W2. To set low fire manifold pressure, repeat steps above. Refer to Figure in input rating section for location of high and low stage adjustment.

For propane gas, the manifold pressure must be between 9.7 and 10.3 inches water column (10.0 nominal). Low stage manifold must be between 5.7 and 6.3 inches water column (6.0 nominal).

Gas Input (Natural Gas Only) Check

To measure the gas input use a gas meter and proceed as follows:

1. Turn off gas supply to all other appliances except the unit.
2. With the unit operating, time the smallest dial on the meter for one complete revolution. If this is a 2 cubic foot dial, divide the seconds by 2; if it is a 1 cubic foot dial, use the seconds as is. This gives the seconds per cubic foot of gas being delivered to the unit.
3. INPUT=GAS HTG VALUE x 3600 / SEC. PER CUBIC FOOT

Example: Natural gas with a heating value of 1000 BTU per cubic foot and 34 seconds per cubic foot as determined by Step 2, then:

Input = 1000 x 3600 / 34 = 106,000 BTU per Hour.
NOTE: BTU content of the gas should be obtained from the gas supplier. This measured input must not be greater than shown on the unit rating plate.

4. Relight all other appliances turned off in step 1. Be sure all pilot burners are operating.

Main Burner Flame Check

Flames should be stable, soft and blue (dust may cause orange tips but they must not be yellow) and extending directly outward from the burner without curling, floating or lifting off.

NOx Screen Check

Verify that the alignment of the NOx screens is at 6 o' clock. In jurisdictions that do not require low NOx emissions, NOx screens may be removed.

Temperature Rise Check

Check the temperature rise through the unit by placing thermometers in supply and return air registers as close to the unit as possible. Thermometers must not be able to sample temperature directly from the unit heat exchangers, or false readings could be obtained.

1. All registers must be open; all duct dampers must be in their final (fully or partially open) position and the unit operated for 15 minutes before taking readings.
2. The temperature rise must be within the range specified on the rating plate.

NOTE: Air temperature rise is the temperature difference between supply and return air.

With a properly designed system, the proper amount of temperature rise will normally be obtained when the unit is operated at rated input with the recommended blower speed.

If the correct amount of temperature rise is not obtained, it may be necessary to change the blower speed. A higher blower speed will lower the temperature rise. A slower blower speed will increase the temperature rise.

NOTE: Blower speed MUST be set to give the correct air temperature rise through the unit as marked on the rating plate.

Refrigeration Sequence Check

With the disconnect switch open, remove the field connected thermostat wire from terminal R on TB1 terminal block. Place a jumper across terminals R and G, and across R and Y on TB1 terminal block. Close the disconnect switch. The following operational sequence should be observed.

1. Current through primary winding of transformer TRANS1 energizes the 24-volt control circuit.
2. To simulate a mechanical call for cooling from the wall thermostat, place a jumper across terminals R and Y of terminal block TB1. The cooling is energized when the room temperature is above the thermostat setpoint for cooling. The thermostat makes R to Y.
3. **UNIT WITH ECONOMIZER OPTION:** The compressor circuit is interlocked through terminals 3 and 4 of the economizer module. If the outdoor air enthalpy (temperature and humidity) is not suitable for cooling, the economizer terminals will be closed permitting compressor to be energized.

4. The belt drive blower contactor closes its contacts L1, L2 and L3 to T1, T2 and T3 to provide power to the supply fan motor.

   PSC Motor

   Adjust the CFM for the unit by changing the speed tap of the indoor blower motor at the EBTDR "com" connection with one of the speed taps on "M1" or "M2". (Black-High Speed, Blue-Medium Speed, Red-Low Speed.)

   EEM Motor

   Adjust the CFM for the unit by changing the position of the low voltage leads on the motor terminal block. White is for fan only and gas heat, Yellow is for cooling. Refer to Appendix A for blower performance at each speed tap. **NOTE:** If more than one lead is energized simultaneously, the motor will run at the higher speed.
5. Check supply fan rotation. If the supply fan is rotating in the wrong direction, disconnect and lock off Single Point Power Block. Do not attempt to change load side wiring. Internal wiring is set at the factory to assure that the supply fan and compressors all rotate in the proper direction. Verification of correct supply fan rotation at initial startup will also indicate correct compressor rotation. Reconnect power and check for proper operation.
6. Compressor contactor closes its contacts L1, L2 and L3 to T1, T2 and T3 to provide power to the compressor motor COMP. 1. In addition, contactor C1 closes its contact L3 to T3 , energizing the condenser fan motor.

WARNING

BURN HAZARD!
DO NOT TOUCH! DISCHARGE LINE MAY BE HOT!

7. Check that the compressor is operating correctly. The scroll compressors in these units MUST operate in the proper rotation. To ensure the compressors are operating in the correct direction, check the compressor discharge line pressure or temperature after the compressor is started.

   The discharge pressure and discharge line temperature should increase. If this does not occur and the compressor is producing an exceptional amount of noise, perform the following checks.

   • Ensure all compressors and the supply fan motor are operating in the proper direction. If a single motor is operating backwards, check the power wiring for that motor and correct any leads that have been interchanged at the contactor or at the motor.

   • If all of the motors are operating backward, disconnect the unit power supply and lock it in the "OFF" position. Switch two leads of the power supply at the unit Single Point Power Block. Reconnect power and check for compressor and supply fan motor operation.
8. With all safety devices closed, the system will continue cooling operation until the thermostat is satisfied.
9. Disconnecting the jumper wire between R and Y and between R and G on TB1 terminal block will simulate a satisfied thermostat. The compressor will cycle off and IIC (pin 12) will initiate its time delay cycle. The compressor and the supply fan will cycle off.
10. After a time delay of approximately 3 minutes, the compressor control circuits will be ready to respond to a subsequent call for cooling from the wall thermostat.
11. Open disconnect switch. Reconnect the field thermostat wire at terminal R on terminal block TB1.

Refrigeration Performance Check

Under normal summertime (full load) operating conditions, superheat should be between 8°F and 12°F and sub-cooling measured at the condenser outlet should be 15°F (nominal). A 25°F to 35°F temperature difference should exist between the entering condenser air and the temperature corresponding to the compressor saturated discharge pressure. Check that compressor RLA corresponds to values shown in Appendix C. RLA draw can be much lower than values listed at low load conditions and low ambient condensing temperatures. Values in Appendix C can slightly exceed at high load conditions and high ambient condensing temperatures.

Gas Supply Pressures & Regulator Adjustments

WARNING

Should overheating occur or the gas supply fail to shut off, turn off the manual gas shutoff valve external to the unit before turning off the electrical supply.

WARNING

To avoid property damage, personal injury or death, do not fire gas unit with flue box cover removed.

NOTE: Except during brief periods when gas pressures are being measured by qualified service personnel, the furnace access panel must always be secured in place when the furnace is in operation. An inspection port in the access panel is provided to monitor the flame.

The first step in checking out the gas-fired furnace is to test the gas supply piping to the unit for tightness and purge the system of air using methods outlined in the latest edition of the National Fuel Gas Code ANSI Z223.1. Verify that the disconnect switch is in the "OFF" position. A soapy water solution should be used to check for gas leaks. Since the unit is subject to considerable jarring during shipment, it is extremely important that all gas connections and joints be tested for tightness. Gas piping downstream from the unit inlet should be checked for leaks during the subsequent sequence check.

The supply gas pressure should be adjusted to 7.0" w.c. on natural gas and 11.0" on LP gas with the gas burners operating. If there is more than one unit on a common gas line, the pressures should be checked with all units under full fire. A

supply pressure tap is provided on the upstream side of the gas valve. A manifold pressure tap is provided on the gas valve. The normal manifold pressure for full input is 3.5" w.c. on natural gas and 9.5" w.c. for propane gas. Low fire natural gas 2.0” w.c., 6.0” low fire propane gas. Minimum gas supply pressure is 5.5" w.c. for natural gas and 11.0" for propane gas. In order to obtain rating, gas supply pressure must be 11.0" w.c. for propane gas.

The pressure regulator on LP gas models is adjusted for 9.5" w.c. manifold pressure and is intended to prevent over-firing only. Do not attempt adjustment of the built-in pressure regulator unless the supply pressure is at least 7.0" w.c. on natural gas or 13.0" w.c. on propane gas. Check the location of the ignition electrode and the flame sensor for correct gap setting.

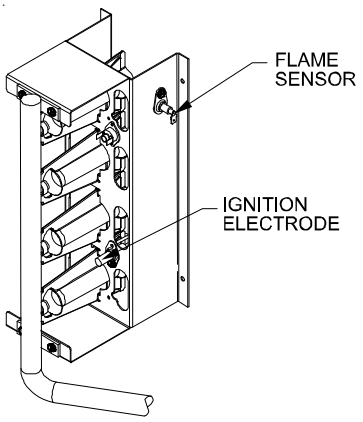

Flame Sensor and Ignition Electrode Location

MAXIMUM INPUT (BTUH)	NUMBER of BURNERS	MAXIMUM BTUH/BURNER	GAS ORIFICES	
			NATURAL (Dia)	PROPANE (LP) (Dia)
45,000	2	23,000	#43	#55
115,000	5	23,000	#43	#55
140,000	6	23,000	#43	#55
90,000	4	23,000	#43	#55

Heat Exchanger and Burner Orifice Specifications

NOTE: Gas appliances located more than 2000 feet above sea level must be derated 4% per 1000 feet of total elevation and that variance in gas heating value and specific gravity require change in manifold pressure to obtain rating, it is mandatory that the input be adjusted at the installation site. All installations should be made as outlined in the latest edition of the National Fuel Gas Code ANSI Z223.1,section “Procedures To Be Followed To Place An Appliance in Operation”. Refer also to the “User’s Information Manual” supplied with the unit for additional information on the gas furnace.

Unit Shutdown

1. Set the thermostat to lowest setting.
2. Turn off the electrical power supply to the unit.
3. Remove the heat exchanger door on the side of the unit by removing screws.
4. Move the gas control valve switch to the OFF position. Do not force.
5. Close manual gas shutoff valve external to the unit.
6. Replace the heat exchanger door on the unit.
7. If cooling and/or air circulation will be desired, turn ON the electrical power.

NORMAL SEQUENCE OF OPERATION

Heating

This unit has one (RS) Manual Reset Limit Control Switch. Check the limit to make sure it has not tripped. The limit may arrive at the job site tripped as a result of shipping shock.

If the ventermotor comes on, but the unit does not attempt ignition, check if the ALS (Auxiliary High Limit Control Switch) requires resetting.

1. With electricity and gas turned on, the system switch in the “HEAT” or “AUTO” position and the fan switch in the “AUTO” position, the thermostat will close the circuit between unit terminals R and W (R-W) when the temperature falls below the thermostat setting.
2. D1 on IIC energizes relay IDMR.
3. Relay IDMR energizes the ventermotor IDM.
4. Operation of the ventermotor closes the pressure switch PS located in the burner compartment. Unless excessive temperatures or shipping shock have opened high limit control ALS, power is fed to the integrated ignition control, which then initiates a 15-second pre-purge time delay. During this period, the ventermotor will clear the combustion chamber of any residual gas.
5. After the pre-purge period, the ignition control energizes the WI-C gas valve and simultaneously initiates a “three (3)-try” spark ignition sequence.
6. When the burners are ignited, a minimum one (1) micro-amp DC current will flow through the flame between the sensor electrode and the grounded burner.
7. When the controller proves that the flame has been established, it will keep the gas valve energized and discontinue the ignition spark. High stage manifold pressure will be approximately 3.5" w.c. for natural gas and 10.0" w.c. for propane (LP). Low fire natural gas is 2.0” w.c.; low fire propane 6.0” w.c.
8. If the control is unable to ignite the burners after its initial attempt, it will initiate another purge and spark sequence. A third purge and spark sequence will be initiated if the second attempt is unsuccessful. If the third attempt is unsuccessful, the controller will close the gas valve and lock itself out. It may be reset by momentarily interrupting power. This may be accomplished by briefly lowering the room thermostat set-point below room temperature, or by shutting off the main power to the unit. (See TP-105 for more details.)

9. Integrated ignition control will close its normally open contacts after a delay of approximately 30 seconds. This action energizes contactor BC and starts the supply fan motor. Operation of the supply fan circulates air across the heat exchanger and delivers heated air to the conditioned space.
10. When the space temperature rises, the thermostat will open R-W. Opening R-W will cause the gas valve to close, and the furnace to shut down.
11. The furnace has three high temperature limit controls, which can shut down the burner. They do not shut down the ventermotor.

Automatic Reset High Limit Control (LS)

Located in the burner compartment on the heat exchanger, its sensing element projects through the blower section bulkhead and senses the temperature at the rear of the furnace. It will cycle the furnace off if the temperature exceeds 100°F plus maximum rise.

Auxiliary High Limit Control (ALS)

Located in the blower compartment on the blower housing, it senses air temperature within the blower compartment and protects the filters from excessive temperature. It will shut down the furnace if it senses excessive temperatures.

Manual Reset Flame Rollout Control (RS)

Located in the burner compartment at the top of the burner assembly, it senses high temperature that could occur if the heat exchanger tubes were plugged and the flame was rolling out instead of entering the tubes. It has a manual push-button reset that cannot be actuated until the limit control has cooled.

TROUBLESHOOTING

Ignition Control Error Codes

The following presents probable causes of questionable unit operation. Refer to *Diagnostic Indicator Chart* for an interpretation of the signal and to this section for an explanation.

Remove the control box access panel and note the number of diagnostic LED flashes. Refer to *Diagnostic Indicator Chart* for an interpretation of the signal and to this section for an explanation.

Internal Control Failure

If the integrated ignition control in this unit encounters an internal fault, it will go into a “hard” lockout and turn off the diagnostic LED. If diagnostic LED indicates an internal fault, check power supply to unit for proper voltage, check all fuses, circuit breakers and wiring. Disconnect electric power for five seconds. If LED remains off after restoring power, replace control.

Abnormal Operation - Heating Codes

External Lockout **(1 FLASH CODE)**

An external lockout occurs if the integrated ignition control determines that a measurable combustion cannot be established within three (3) consecutive ignition attempts. If flame is not established within the seven (7) second trial for ignition, the gas valve is deenergized, 15 second inter-purge cycle is completed, and ignition is reattempted. The control will repeat this routine three times if a measurable combustion is not established. The control will then shut off the induced draft blower and go into a lockout state.

If flame is established but lost, the control will energize the circulator blower at the heat speed and then begin a new ignition sequence. If flame is established then lost on subsequent attempts, the control will recycle for four (4) consecutive ignition attempts (five attempts total) before locking out.

The diagnostic fault code is 1 flash for a lockout due to failed ignition attempts or flame dropouts. The integrated control will automatically reset after one hour, or it can be reset by removing the thermostat signal or disconnecting the electrical power supply for over five seconds. If the diagnostic LED indicates an external lockout, perform the following checks:

- *Check the supply and manifold pressures*
- *Check the gas orifices for debris*
- *Check gas valve for proper operation*
- *Check secondary limit*
  A dirty filter, excessive duct static, insufficient air flow, a faulty limit, or a failed circulator blower can cause this limit to open. Check filters, total external duct static, circulator blower motor, blower motor speed tap (see wiring diagram), and limit. An interruption in electrical power during a heating cycle may also cause the auxiliary limit to open. The automatic reset secondary limit is located on top of the circulator blower assembly.
- *Check rollout limit*
  If the burner flames are not properly drawn into the heat exchanger, the flame rollout protection device will open. Possible causes are restricted or blocked flue passages, blocked or cracked heat exchanger, a failed induced draft blower, or insufficient combustion air. The rollout protection device is a manual reset limit located on the burner bracket. The cause of the flame rollout must be determined and corrected before resetting the limit.
- *Check flame sensor*
  A drop in flame signal can be caused by nearly invisible coating on the sensor. Remove the sensor and carefully clean with steel wool.
- *Check wiring*
  Check wiring for opens/shorts and miswiring.

IMPORTANT: If you have to frequently reset your gas/electric package unit, it means that a problem exists that should be corrected. Contact a qualified servicer for further information.

Pressure Switch Stuck Open **(2 FLASH CODE)**

IA pressure switch stuck open can be caused by a faulty pressure switch, faulty wiring, a disconnected or damaged hose, a blocked or restricted flue, or a faulty induced draft blower.f the control senses an open pressure switch during the prepurge cycle, the induced draft blower only will be energized.

If the pressure switch opens after ignition has begun the gas valve is deenergized, the circulator blower heat off cycle begins, and the induced draft blower remains on. The diagnostic fault code is two flashes.

Pressure Switch Stuck Closed **(3 FLASH CODE)**

A stuck closed pressure switch can be caused by a faulty pressure switch or faulty wiring. If the control encounters a pressure switch stuck closed, the induced draft blower remains off. The diagnostic LED code for this fault is three (3) flashes.

Open Thermal Protection Device **(4 FLASH CODE)**

If the primary limit switch opens, the gas valve is immediately deenergized, the induced draft and air circulating blowers are energized. The induced draft and air circulator blowers remain energized until the limit switch recloses. The diagnostic fault code for an open limit is four (4) flashes.

A primary limit will open due to excessive supply air temperatures. This can be caused by a dirty filter, excessive duct static, insufficient air flow, or a faulty limit. Check filters, total external duct static, blower motor, blower motor speed tap (see wiring diagram), and limit. This limit will automatically reset once the temperature falls below a preset level.

Flame Detected with Gas Valve Closed **(5 FLASH CODE)**

If flame is detected with the gas valve deenergized, the combustion and air circulator blowers are energized. The diagnostic fault code is five (5) flashes for this condition. The control can be reset by removing the power supply to the unit or it will automatically reset after one hour. Miswiring is the probable cause for this fault.

Abnormal Operation - Cooling Codes

Short Cycle Compressor Delay **(6 FLASH CODE)**

The automatic ignition control has a built-in feature that prevents damage to the compressor in short cycling situations. In the event of intermittent power losses or intermittent thermostat operation, the ignition control will delay output to the compressor contactor for three minutes from the time power is restored. (Compressor is off a total of three minutes). The diagnostic LED will flash six (6) times to indicate the compressor contactor output is being delayed.

NOTE: Some electronic thermostats also have a built-in compressor short cycle timer that may be longer than the three minute delay given above. If you are using an electronic thermostat and the compressor has not started after three minutes, wait an additional five minutes to allow the thermostat to complete its short cycle delay time.

INPUT RATING

It is the responsibility of the contractor to adjust the gas input to the unit. The input rate can be calculated by using the formula:

$$\text{INPUT Btu/Hr} = \frac{3600 \times HV}{T}$$

WHERE:
HV = Heating value of fuel = Btu/ft^3 of gas
T = Time in seconds per ft^3 of gas flow as read from gas meter

Adjust input rate by varying the adjustment of the gas pressure regulator on the gas valve. All adjustments must be made with furnace operating at high fire and at normal operating temperature. Clockwise (**P**) rotation of the pressure regulator screw increases pressure and gas flow rate. Turn screw counterclockwise (**Q**) to decrease pressure and gas flow rate. After adjustment the furnace temperature rise must be within the range specified on the unit data plate. **NOTE:** Thermal efficiency of the furnace is a product efficiency rating determined under continuous operating conditions independent of any installed system.

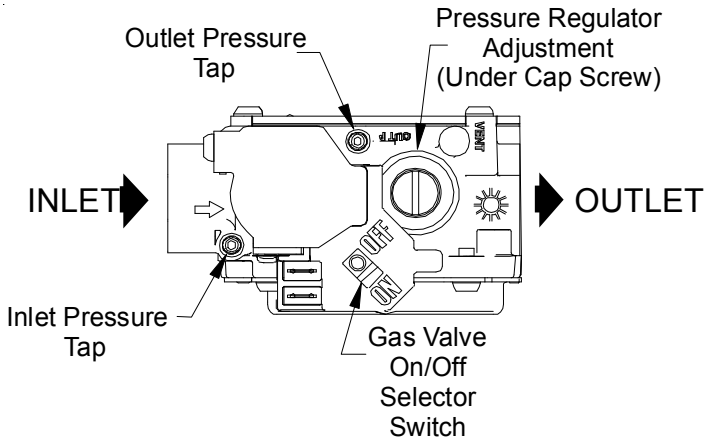

White-Rodgers 36G22 - Single Stage

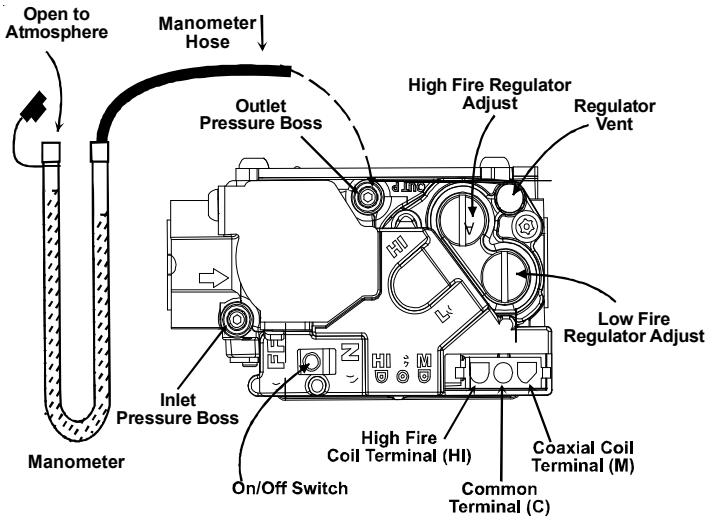

White-Rodgers 36G54 (2-Stage) Connected to Manometer Pressure Adjustments

To connect manometer to gas valve:

1. Back outlet pressure test screw (inlet/outlet pressure boss) out one turn (counterclockwise, not more than one turn).
2. Attach a hose and manometer to the outlet pressure boss of the valve.

To remove manometer from gas valve:

1. Remove manometer hose from outlet pressure boss.
2. Turn outlet pressure test screw in to seal pressure port (clockwise, 7 in-lb. minimum).
3. Turn on electrical power and gas supply to the system.
4. Turn on system power and energize valve.
5. Using a leak detection solution or soap suds, check for leaks at pressure boss screw. Bubbles forming indicate a leak. SHUT OFF GAS AND FIX ALL LEAKS IMMEDIATELY.

CAUTION

TO PREVENT UNRELIABLE OPERATION OR EQUIPMENT DAMAGE, THE GAS MANIFOLD PRESSURE MUST BE AS SPECIFIED ON THE UNIT RATING PLATE. ONLY MINOR ADJUSTMENTS SHOULD BE MADE BY ADJUSTING THE GAS VALVE PRESSURE REGULATOR.

AIR FLOW ADJUSTMENTS

The drive on the supply fan is typically set in the middle of the RPM range. The drive motor sheave pitch diameter is field adjustable for the required airflow. Refer to “Drive Adjustments” section below.

When the final adjustments are complete, the current draw of the motor should be checked and compared to the full load current rating of the motor. The amperage must not exceed the service factor stamped on the motor nameplate. The total airflow must not be less than that required for operation of the electric heaters or the furnace.

If an economizer is installed, check the unit operating balance with the economizer at full outside air and at minimum outside air. Upon completion of the air flow balancing, we recommend replacing the variable pitched motor sheave with a properly-sized fixed sheave. A matching fixed sheave will provide longer belt and bearing life and vibration free operation. Initially, it is best to have a variable pitched motor sheave for the purpose of airflow balancing, but once the balance has been achieved, fixed sheaves maintain alignment and minimize vibration more effectively. For direct drive units, move fan speed wire.

NOTE: Never run CFM below 350 CFM per ton, evaporator freezing or poor unit performance is possible.

PSC Motor

Adjust the CFM for the unit by changing the speed tap of the indoor blower motor at the heat or cool tap on the control board connection with the one of the speed taps on “M1” or “M2” (Black-High Speed, Blue-Medium Speed, Red-Low Speed).

EEM Motor

Adjust the CFM for the unit by changing the position of the low voltage leads on the motor terminal block. Green is for Fan Only. Yellow is for Cooling and Heat Pump Heating. Refer to Appendix A for blower performance at each speed tap. **NOTE:** If more than one lead is energized simultaneously, the motor will run at the higher speed.

MOTOR SHEAVE ADJUSTMENTS

VL, VM, & 2VP Variable Pitch Key Type Motor Sheaves

The driving and driven motor sheaves should be in alignment with each other and the shafts parallel.

VL & VM Sheaves Adjustment

1. Loosen set screw “B” using a 5/32" Allen key.
2. Making half or full turns from closed position, adjust sheave pitch diameter for desired speed. DO NOT OPEN MORE THAN FIVE FULL TURNS.
3. Tighten set screw “B” securely over flat.
4. Carefully put on belts and adjust belt tension. DO NOT FORCE BELTS OVER GROOVES.
5. Ensure all keys are in place and the set screws tight before starting drive. Recheck set screws and belt tension after 24 hours service.

NOTE: Future adjustments should be made by loosening the belt tension and increasing or decreasing the pitch diameter of the sheave by half or full turns as required. Readjust belt tension before starting drive.

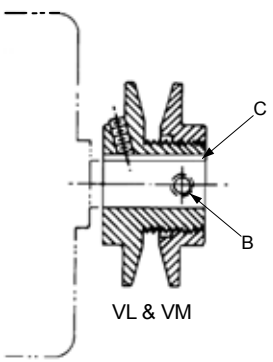

Sheave

NOTE: Do **NOT** operate sheave with flange projecting beyond the hub end.

MAINTENANCE

WARNING

HIGH VOLTAGE!
DISCONNECT ALL POWER BEFORE SERVICING OR INSTALLING THIS UNIT. MULTIPLE POWER SOURCES MAY BE PRESENT. FAILURE TO DO SO MAY CAUSE PROPERTY DAMAGE, PERSONAL INJURY OR DEATH.

WARNING

TO PREVENT PERSONAL INJURY OR DEATH DUE TO IMPROPER INSTALLATION, ADJUSTMENT, ALTERATION, SERVICE OR MAINTENANCE, REFER TO THIS MANUAL. FOR ADDITIONAL ASSISTANCE OR INFORMATION, CONSULT A QUALIFIED INSTALLER, SERVICE AGENCY OR THE GAS SUPPLIER.

CAUTION

SHEET METAL PARTS, SCREWS, CLIPS AND SIMILAR ITEMS INHERENTLY HAVE SHARP EDGES, AND IT IS NECESSARY THAT THE INSTALLER AND SERVICE PERSONNEL EXERCISE CAUTION.

Preventive maintenance is the best way to avoid unnecessary expense and inconvenience. Have this system inspected at regular intervals by qualified service personnel, at least twice a year. Routine maintenance should cover the following items:

1. Tighten all belts, set screws, and wire connections.
2. Clean evaporator and condenser coils mechanically or with cold water, if necessary. Usually any fouling is only matted on the entering air face of the coil and can be removed by brushing.
3. Lubricate motor bearings.
4. Align or replace belts as needed.
5. Replace filters as needed (see below).
6. Check for blockage of condensate drain.
7. Check power and control voltages.
8. Check running amperage.
9. Check operating temperatures and pressures.
10. Check and adjust temperature and pressure controls.
11. Check and adjust damper linkages.
12. Check operation of all safety controls.
13. Examine gas furnaces (see below and the User's Information Manual).
14. Check condenser fans and tighten set screws.

Filters

CAUTION

TO PREVENT PROPERTY DAMAGE DUE TO FIRE AND LOSS OF EQUIPMENT EFFICIENCY OR EQUIPMENT DAMAGE DUE TO DUST AND LINT BUILD UP ON INTERNAL PARTS, NEVER OPERATE UNIT WITHOUT AN AIR FILTER INSTALLED IN THE RETURN AIR SYSTEM.

Every application may require a different frequency of replacement of dirty filters. Filters must be replaced at least every three (3) months during operating seasons.

Dirty filters are the most common cause of inadequate heating or cooling performance. Filter inspection should be made at least every two months; more often if necessary because of local conditions and usage.

Dirty throwaway filters should be discarded and replaced with a new, clean filter.

Disposable return air filters are supplied with this unit. See the unit Specification Sheet or Technical Manual for the correct size and part number. To remove the filters, remove the filter access panel on return side of the unit.

Cabinet Finish Maintenance

Use a fine grade automotive wax on the cabinet finish to maintain the finish's original high luster. This is especially important in installations with extended periods of direct sunlight.

Clean Outside Coil (Qualified Servicer Only)

The coil with the outside air flowing over it should be inspected annually and cleaned as frequently as necessary to keep the finned areas free of lint, hair and debris.

Condenser And Induced Draft Motors

Bearings on the condenser fan motors and the combustion fan motor are permanently lubricated. No additional oiling is required.

Flame Sensor (Qualified Servicer Only)

A drop in the flame current can be caused by a nearly invisible coating on the flame sensor. This coating, created by the fuel or combustion air supply, can be removed by carefully cleaning the flame sensor with steel wool.

NOTE: After cleaning, the microamp signal should be stable and in the range of 4 - 6 microamps DC.

Flue Passages (Qualified Servicer Only)

At the start of each heating season, inspect and, if necessary, clean the unit flue passage.

Lubrication

The fan shaft bearings, the 1 to 2 HP supply fan motors, the condenser fan motors and compressors are permanently lubricated.

Inspection & Cleaning

All flue product carrying areas of the furnace, its vent system, and main burners should be examined by a qualified service agency before the start of each heating season. This examination is necessary for continued safe operation. Particular attention should be given to deterioration from corrosion or other sources. This examination is accomplished in the following manner.

1. Disconnect power to the unit and remove furnace section access panel.
2. Remove burner assembly:
   a. Disconnect the wires from the gas valve after noting which wires are connected to each terminal.

b. Disconnect wires from the flame rod and ignition electrode.
c. Disconnect the gas piping at the union.
d. The entire burner assembly can now be removed from the unit.

NOTE: Use all screws that were removed; they are necessary for safe and proper operation of the unit.

3 Inspect and periodically clean the vent outlet (bird screen) on the access panel.

NOTE: Periodic observation of the flame and a log of $C0_2$ measurements are recommended. This will aid in determining whether the furnace is operating efficiently or if the furnace requires cleaning.

Flames should be stable, soft and blue (dust may cause orange tips but must not be yellow). The flames must extend directly outward from the burner without curling, floating or lifting off.

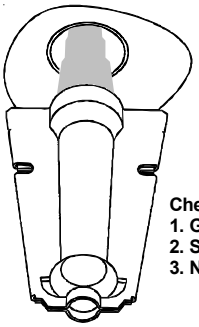

Check the burner flames for:
1. Good adjustment
2. Stable, soft and blue
3. Not curling, floating, or lifting off.

Burner Flame

WARNING

TO AVOID PERSONAL INJURY OR DEATH DUE TO ELECTRIC SHOCK, DO NOT REMOVE ANY INTERNAL COMPARTMENT COVERS OR ATTEMPT ANY ADJUSTMENT. CONTACT A QUALIFIED SERVICER AT ONCE IF AN ABNORMAL FLAME SHOULD DEVELOP.

At least once a year, prior to or during the heating season, make a visual check of the burner flames.

NOTE: This will involve removing and reinstalling the heat exchanger door on the unit, which is held by two screws. If you are uncertain about your ability to do this, contact a qualified servicer.

If a strong wind is blowing, it may alter the airflow pattern within the unit enough that an inspection of the burner flames is not possible.

FUNCTIONAL PARTS

Refer to the unit Parts Catalog for a list of functional parts. Parts are available from your distributor.

APPENDIX A BLOWER PERFORMANCE TABLES
DIRECT DRIVE

CPG036 DOWN SHOT AND HORIZONTAL

CPG036 DIRECT DRIVE DOWN SHOT

SPEED TAP	EXTERNAL STATIC PRESSURE (ESP) in w.c.	STANDARD CFM	AMPS	WATTS	RPM
LOW	0.10	1313	1.68	356	748
	0.20	1247	1.63	344	786
	0.30	1178	1.59	334	832
	0.40	1094	1.55	324	869
	0.50	1002	1.50	312	913
	0.60	919	1.45	296	940
MED	0.10	1471	2.11	454	830
	0.20	1400	2.06	440	863
	0.30	1354	2.02	432	896
	0.40	1271	1.95	416	929
	0.50	1188	1.90	398	957
	0.60	1083	1.82	378	984
	0.70	955	1.74	356	1012
HIGH	0.30	1470	2.37	510	935
	0.40	1390	2.31	492	957
	0.50	1310	2.25	476	978
	0.60	1206	2.17	454	1000
	0.70	1098	2.09	436	1023
	0.80	966	1.99	412	1045

CPG036 DIRECT DRIVE HORIZONTAL

SPEED TAP	EXTERNAL STATIC PRESSURE (ESP) in w.c.	STANDARD CFM	AMPS	WATTS	RPM
LOW	0.10	1293	1.72	364	715
	0.20	1235	1.67	354	759
	0.30	1173	1.62	342	803
	0.40	1124	1.58	330	841
	0.50	1056	1.54	316	880
	0.60	978	1.47	298	913
MED	0.10	1500	2.13	462	808
	0.20	1434	2.10	448	838
	0.30	1381	2.04	436	869
	0.40	1318	2.00	424	902
	0.50	1238	1.94	406	929
	0.60	1163	1.88	392	951
	0.70	1055	1.80	370	990
HIGH	0.80	936	1.72	350	1017
	0.40	1441	2.35	504	940
	0.50	1355	2.28	484	962
	0.60	1264	2.21	468	989
	0.70	1157	2.13	446	1012
	0.80	1027	2.03	418	1034
	0.90	840	1.90	388	1067

NOTES:
Tables represent dry coil without filter, to compensate for filter add 0.08" to measured E.S.P. SCFM correction for wet coil = 4 %.
3 Ton models are shipped from the factory with speed tap set on LOW.

APPENDIX A BLOWER PERFORMANCE TABLES
DIRECT DRIVE

CPG048 DOWN SHOT AND HORIZONTAL

CPG048 DIRECT DRIVE DOWN SHOT

SPEED TAP	EXTERNAL STATIC PRESSURE (ESP) in w.c.	STANDARD CFM	AMPS	WATTS	RPM
LOW	0.10	1592	2.54	543	815
	0.20	1528	2.43	521	858
	0.30	1464	2.32	499	901
	0.40	1380	2.21	475	930
	0.50	1296	2.10	451	959
MED	0.10	1828	3.08	665	892
	0.20	1700	2.75	601	924
	0.30	1606	2.61	563	966
	0.40	1531	2.48	537	990
	0.50	1401	2.32	503	1023
	0.60	1287	2.22	477	1045
	0.70	1123	2.05	441	1073
HIGH	0.10	1926	3.34	740	937
	0.20	1825	3.18	700	965
	0.30	1712	3.03	660	989
	0.40	1598	2.87	626	1015
	0.50	1482	2.76	596	1032
	0.60	1357	2.62	564	1049

CPG048 DIRECT DRIVE HORIZONTAL

SPEED TAP	EXTERNAL STATIC PRESSURE (ESP) in w.c.	STANDARD CFM	AMPS	WATTS	RPM
LOW	0.10	1612	2.60	554	789
	0.20	1548	2.49	532	832
	0.30	1484	2.38	510	875
	0.40	1400	2.27	486	904
	0.50	1316	2.16	462	933
MED	0.10	1846	3.14	676	866
	0.20	1718	2.81	612	898
	0.30	1624	2.67	574	940
	0.40	1549	2.54	548	964
	0.50	1419	2.38	514	997
	0.60	1305	2.28	488	1019
	0.70	1141	2.11	452	1047
HIGH	0.10	1954	3.43	758	924
	0.20	1853	3.27	718	952
	0.30	1740	3.12	678	976
	0.40	1626	2.96	644	1002
	0.50	1510	2.85	614	1019
	0.60	1385	2.71	582	1036

NOTES:
Tables represent dry coil without filter, to compensate for filter add 0.08" to measured E.S.P. SCFM correction for wet coil = 4 %.
4 Ton models are shipped from the factory with speed tap set on MED.

APPENDIX A BLOWER PERFORMANCE TABLES
DIRECT DRIVE

CPG060 DOWN SHOT

CPG060 DIRECT DRIVE DOWN SHOT

SPEED TAP	EXTERNAL STATIC PRESSURE (ESP) in w.c.	STANDARD CFM	AMPS	WATTS	RPM
T1	0.10	1237	1.64	180	638
	0.20	1191	1.75	194	682
	0.30	1127	1.80	200	715
	0.40	1065	1.89	214	753
	0.50	994	1.97	220	797
T2	0.10	1437	2.13	248	687
	0.20	1384	2.24	254	726
	0.30	1312	2.29	262	759
	0.40	1245	2.42	280	803
	0.50	1185	2.54	294	847
T3	0.10	1988	4.49	558	885
	0.20	1942	4.58	574	907
	0.30	1882	4.69	582	935
	0.40	1847	4.80	600	962
	0.50	1784	4.87	612	990
	0.60	1762	4.97	626	1008
	0.70	1688	5.05	642	1039
T4	0.10	2106	5.14	650	924
	0.20	2050	5.26	670	951
	0.30	1993	5.32	678	969
	0.40	1960	5.47	696	1001
	0.50	1920	5.54	706	1021
	0.60	1880	5.61	726	1041
	0.70	1810	5.73	736	1072
	0.80	1760	5.81	750	1093
	0.90	1694	5.84	752	1122
T5	0.10	2199	5.87	762	968
	0.20	2146	5.96	772	989
	0.30	2121	6.06	788	1012
	0.40	2066	6.15	804	1039
	0.50	2010	6.21	814	1056
	0.60	1978	6.32	834	1084
	0.70	1919	6.28	830	1102
	0.80	1837	6.22	814	1122
	0.90	1738	6.04	786	1127

NOTES:
Tables represent dry coil without filter, to compensate for filter add 0.08" to measured E.S.P. SCFM correction for wet coil = 4 %. 5 Ton models are shipped from the factory with speed tap set on T4.

APPENDIX A BLOWER PERFORMANCE TABLES
DIRECT DRIVE

CPG060 HORIZONTAL

CPG060 DIRECT DRIVE HORIZONTAL

SPEED TAP	EXTERNAL STATIC PRESSURE (ESP) in w.c.	STANDARD CFM	AMPS	WATTS	RPM
T1	0.10	1416	1.63	176	588
	0.20	1295	1.61	174	621
	0.30	1200	1.68	186	660
	0.40	1133	1.79	196	704
	0.50	1045	1.90	208	753
T2	0.10	1543	2.00	220	627
	0.20	1485	2.12	236	671
	0.30	1425	2.20	250	698
	0.40	1352	2.26	258	748
	0.50	1304	2.39	274	786
T3	0.10	2107	4.02	502	797
	0.20	2031	4.13	518	819
	0.30	1980	4.27	536	858
	0.40	1954	4.37	554	880
	0.50	1887	4.48	572	913
	0.60	1839	4.58	582	940
	0.70	1782	4.72	602	968
T4	0.10	2224	4.73	592	832
	0.20	2165	4.79	612	860
	0.30	2123	4.91	630	891
	0.40	2079	5.01	642	913
	0.50	2029	5.14	666	946
	0.60	1978	5.26	676	969
	0.70	1926	5.38	698	1001
	0.80	1872	5.48	712	1028
	0.90	1817	5.58	722	1056
T5	0.10	2318	5.42	700	874
	0.20	2296	5.55	720	903
	0.30	2228	5.66	734	929
	0.40	2193	5.76	748	950
	0.50	2145	5.90	766	979
	0.60	2097	5.99	784	1012
	0.70	2054	6.10	798	1034
	0.80	1991	6.15	810	1050
	0.90	1952	6.26	826	1079

NOTES:
Tables represent dry coil without filter, to compensate for filter add 0.08" to measured E.S.P. SCFM correction for wet coil = 4 %. 5 Ton models are shipped from the factory with speed tap set on T4.

APPENDIX A BLOWER PERFORMANCE TABLES
BELT DRIVE

STANDARD DOWN SHOT

CPG036 STANDARD BELT DRIVE DOWN SHOT

ESP, In H_2O	TURNS OPEN											
	0		1		2		3		4		5	
	CFM	BHP	CFM	BHP	CFM	BHP	CFM	BHP	CFM	BHP	CFM	BHP
0.2							1596	0.36	1368	0.28	1162	0.21
0.4					1468	0.37	1224	0.28	981	0.20		
0.6	1610	0.51	1383	0.39	1124	0.28	856	0.19				
0.8	1293	0.40	1021	0.29	776	0.20						
1.0	948	0.29	614	0.17								

CPG048 STANDARD BELT DRIVE DOWN SHOT

ESP, In H_2O	TURNS OPEN											
	0		1		2		3		4		5	
	CFM	BHP	CFM	BHP	CFM	BHP	CFM	BHP	CFM	BHP	CFM	BHP
0.2							1891	0.56	1632	0.42	1391	0.30
0.4					1796	0.57	1533	0.43	1290	0.31	1055	0.19
0.6	1948	0.74	1744	0.61	1446	0.44	1206	0.32	910	0.19		
0.8	1654	0.63	1409	0.48	1096	0.31						
1.0	1337	0.50	987	0.28								

CPG060 STANDARD BELT DRIVE DOWN SHOT

ESP, In H_2O	TURNS OPEN											
	0		1		2		3		4		5	
	CFM	BHP	CFM	BHP	CFM	BHP	CFM	BHP	CFM	BHP	CFM	BHP
0.2			2210	0.91	2041	0.76	1869	0.63	1739	0.52	1565	0.40
0.4	2197	0.98	2021	0.82	1841	0.67	1660	0.54	1521	0.44	1339	0.32
0.6	2002	0.88	1822	0.72	1635	0.58	1445	0.44	1288	0.35		
0.8	1799	0.77	1610	0.62	1425	0.48						
1.0	1587	0.67	1384	0.51								

CPG072 STANDARD BELT DRIVE DOWN SHOT

ESP, In H_2O	TURNS OPEN											
	0		1		2		3		4		5	
	CFM	BHP	CFM	BHP	CFM	BHP	CFM	BHP	CFM	BHP	CFM	BHP
0.2					2771	1.27	2567	1.05	2421	0.88	2220	0.71
0.4			2753	1.38	2573	1.15	2382	0.95	2186	0.77	1980	0.61
0.6	2655	1.42	2548	1.24	2360	1.02	2119	0.81	1934	0.65		
0.8	2470	1.30	2331	1.11	2111	0.89	1868	0.69				
1.0	2296	1.18	2078	0.96	1840	0.75						
1.2	2040	1.02										

NOTE

Tables represent dry coil without filter, to compensate for filter add 0.08" to measured E.S.P.
SCFM correction for wet coil = 4 %.

APPENDIX A BLOWER PERFORMANCE TABLES
BELT DRIVE
STANDARD HORIZONTAL

CPG036 STANDARD BELT DRIVE HORIZONTAL

ESP, In H_2O	TURNS OPEN											
	0		1		2		3		4		5	
	CFM	BHP	CFM	BHP	CFM	BHP	CFM	BHP	CFM	BHP	CFM	BHP
0.2									1524	0.32	1340	0.25
0.4					1628	0.41	1396	0.32	1171	0.24	900	0.16
0.6			1541	0.43	1284	0.32	1024	0.23	714	0.14		
0.8	1444	0.45	1193	0.33	936	0.24						
1.0	1111	0.34	806	0.23								
1.2	744	0.22										

CPG048 STANDARD BELT DRIVE HORIZONTAL

ESP, In H_2O	TURNS OPEN											
	0		1		2		3		4		5	
	CFM	BHP	CFM	BHP	CFM	BHP	CFM	BHP	CFM	BHP	CFM	BHP
0.2									1800	0.47	1556	0.35
0.4					2002	0.65	1708	0.49	1438	0.36	1167	0.22
0.6			1910	0.67	1612	0.50	1330	0.37	1030	0.23		
0.8	1813	0.69	1571	0.54	1222	0.36	989	0.25				
1.0	1478	0.56	1142	0.32								
1.2	1107	0.41										

CPG060 STANDARD BELT DRIVE HORIZONTAL

ESP, In H_2O	TURNS OPEN											
	0		1		2		3		4		5	
	CFM	BHP	CFM	BHP	CFM	BHP	CFM	BHP	CFM	BHP	CFM	BHP
0.2					2460	0.96	2251	0.80	2073	0.65	1862	0.51
0.4			2408	1.00	2206	0.84	1982	0.68	1808	0.55	1572	0.41
0.6	2402	1.08	2173	0.89	1943	0.72	1701	0.55	1511	0.43		
0.8	2153	0.95	1917	0.77	1667	0.59						
1.0	1888	0.82	1634	0.63								
1.2	1601	0.67										

CPG072 STANDARD BELT DRIVE HORIZONTAL

ESP, In H_2O	TURNS OPEN											
	0		1		2		3		4		5	
	CFM	BHP	CFM	BHP	CFM	BHP	CFM	BHP	CFM	BHP	CFM	BHP
0.2							2749	1.18	2573	0.96	2402	0.79
0.4					2680	1.22	2544	1.06	2346	0.84	2164	0.68
0.6			2655	1.31	2498	1.10	2306	0.92	2094	0.72	1890	0.57
0.8	2703	1.47	2486	1.20	2263	0.97	2076	0.81				
1.0	2515	1.34	2272	1.07	2002	0.83						
1.2	2253	1.16	2028	0.93								

NOTE

Tables represent dry coil without filter, to compensate for filter add 0.08" to measured E.S.P.
SCFM correction for wet coil = 4 %.

APPENDIX A BLOWER PERFORMANCE TABLES
BELT DRIVE

HIGH STATIC DOWN SHOT

CPG036 HIGH STATIC BELT DRIVE DOWN SHOT

ESP, In H_2O	TURNS OPEN											
	0		1		2		3		4		5	
	CFM	BHP	CFM	BHP	CFM	BHP	CFM	BHP	CFM	BHP	CFM	BHP
0.6							1655	0.526	1389	0.395	1103	0.275
0.8					1640	0.571	1342	0.426	1035	0.289	775	0.19
1.0			1638	0.632	1326	0.471	1002	0.317	713	0.192		
1.2	1638	0.692	1307	0.519	984	0.362						
1.4	1307	0.579	1002	0.416								
1.6	1002	0.476	717	0.319								
1.8	717	0.379										

CPG048 HIGH STATIC BELT DRIVE DOWN SHOT

ESP, In H_2O	TURNS OPEN											
	0		1		2		3		4		5	
	CFM	BHP	CFM	BHP	CFM	BHP	CFM	BHP	CFM	BHP	CFM	BHP
0.6							1989	0.769	1712	0.594	1433	0.441
0.8					1929	0.788	1662	0.631	1384	0.469	1106	0.329
1.0			1952	0.876	1622	0.665	1335	0.494	1056	0.345		
1.2	1897	0.93	1611	0.726	1315	0.543	1008	0.357				
1.4	1616	0.80	1298	0.588	1007	0.419						
1.6	1316	0.659	1007	0.46								
1.8												

CPG060 HIGH STATIC BELT DRIVE DOWN SHOT

ESP, In H_2O	TURNS OPEN											
	0		1		2		3		4		5	
	CFM	BHP	CFM	BHP	CFM	BHP	CFM	BHP	CFM	BHP	CFM	BHP
0.6					2262	1.161	2051	0.948	1851	0.763	1657	0.60
0.8			2277	1.271	2070	1.048	1852	0.837	1646	0.656		
1.0	2304	1.387	2089	1.153	1872	0.931	1647	0.722				
1.2	2104	1.255	1893	1.029	1668	0.811						
1.4	1912	1.129	1690	0.90								
1.6	1720	1.00										

CPG072 HIGH STATIC BELT DRIVE DOWN SHOT

ESP, In H_2O	TURNS OPEN											
	0		1		2		3		4		5	
	CFM	BHP	CFM	BHP	CFM	BHP	CFM	BHP	CFM	BHP	CFM	BHP
0.6					2793	1.645	2575	1.367	2407	1.155	2250	0.963
0.8			2775	1.762	2638	1.526	2407	1.253	2226	1.045	2011	0.835
1.0	2821	1.894	2660	1.668	2407	1.358	2194	1.116	2012	0.923		
1.2	2696	1.787	2497	1.54	2228	1.235	1977	0.985				
1.4	2455	1.591	2236	1.346	2013	1.10						
1.6	2262	1.44	2032	1.20								
1.8	2069	1.30										

NOTE

Tables represent dry coil without filter, to compensate for filter add 0.08" to measured E.S.P.
SCFM correction for wet coil = 4 %.

APPENDIX A BLOWER PERFORMANCE TABLES
BELT DRIVE - HIGH STATIC HORIZONTAL

CPG036 HIGH STATIC BELT DRIVE HORIZONTAL

ESP, In H_2O	TURNS OPEN											
	0		1		2		3		4		5	
	CFM	BHP	CFM	BHP	CFM	BHP	CFM	BHP	CFM	BHP	CFM	BHP
0.6									1568	0.45	1266	0.32
0.8							1492	0.47	1194	0.34	922	0.23
1.0					1476	0.52	1163	0.37	856	0.24		
1.2			1458	0.57	1146	0.41	802	0.25				
1.4	1458	0.63	1139	0.46	782	0.30						
1.6	1139	0.52	844	0.36								
1.8	844.3	0.42										

CPG048 HIGH STATIC BELT DRIVE HORIZONTAL

ESP, In H_2O	TURNS OPEN											
	0		1		2		3		4		5	
	CFM	BHP	CFM	BHP	CFM	BHP	CFM	BHP	CFM	BHP	CFM	BHP
0.6									1894	0.66	1585	0.49
0.8							1839	0.71	1532	0.53	1223	0.37
1					1782	0.73	1477	0.55	1170	0.39		
1.2			1786	0.80	1445	0.59	1115	0.40				
1.4	1764	0.86	1426	0.64	1107	0.46						
1.6	1446	0.72	1098	0.50								
1.8	1099	0.56										

CPG060 HIGH STATIC BELT DRIVE HORIZONTAL

ESP, In H_2O	TURNS OPEN											
	0		1		2		3		4		5	
	CFM	BHP	CFM	BHP	CFM	BHP	CFM	BHP	CFM	BHP	CFM	BHP
0.6									2219	0.95	1970	0.75
0.8							2215	1.04	1956	0.82	1697	0.62
1.0					2240	1.15	1957	0.90	1681	0.67		
1.2			2260	1.26	1983	1.00	1683	0.74				
1.4	2288	1.38	2009	1.10	1711	0.84						
1.6	2032	1.21	1741	0.93								
1.8	1776	1.04										

CPG072 HIGH STATIC BELT DRIVE HORIZONTAL

ESP, In H_2O	TURNS OPEN											
	0		1		2		3		4		5	
	CFM	BHP	CFM	BHP	CFM	BHP	CFM	BHP	CFM	BHP	CFM	BHP
0.6									2677	1.29	2486	1.07
0.8							2690	1.42	2529	1.20	2263	0.94
1.0					2740	1.60	2471	1.27	2246	1.02	1972	0.79
1.2			2748	1.74	2518	1.44	2255	1.13	1970	0.87		
1.4	2797	1.87	2562	1.59	2273	1.27	2025	0.99				
1.6	2556	1.67	2314	1.40	2035	1.11						
1.8	2342	1.50	2037	1.21								
2.0	2137	1.35										

NOTE

Tables represent dry coil without filter, to compensate for filter add 0.08" to measured E.S.P.
SCFM correction for wet coil = 4 %.

APPENDIX B ELECTRICAL DATA

ELECTRICAL DATA

MODELS	VOLTAGE (NAMEPLATE)	VOLTAGE LIMITATION		COMPRESSOR			OUTDOOR FAN MOTOR			INDOOR MOTOR APPLICATION	INDOOR FAN MOTOR	
		MIN.	MAX.	QTY	RLA	LRA	QTY	HP	RLA		HP	FLA
3 TON	208/230-60-1	187	253	1	16.67	79	1	1/4	1.40	DD STD STATIC	1/3	2.5
	208/230-60-3	187	253	1	10.45	73.0	1	1/4	1.40	DD STD STATIC	1/3	2.5
										BD STD STATIC	1.0	3.8
	460-60-3	414	506	1	5.77	38.0	1	1/4	0.80	BD STD STATIC	1.0	1.9
	575-60-3	518	633	1	3.8	37.0	1	1/4	0.60	BD STD STATIC	1.5	2.3
4 TON	208/230-60-1	187	253	1	19.87	109	1	1/4	1.40	DD STD STATIC	1/2	2.9
	208/230-60-3	187	253	1	13.14	83.1	1	1/4	1.40	DD STD STATIC	1/2	2.9
										BD STD STATIC	1.0	3.8
	460-60-3	414	506	1	6.09	41.0	1	1/4	0.80	BD STD STATIC	1.0	1.9
	575-60-3	518	633	1	4.4	33.0	1	1/4	0.60	BD STD STATIC	1.5	2.3
5 TON	208/230-60-1	187	253	1	26.41	134	1	1/4	1.40	DD STD STATIC	1.0	7.6
	208/230-60-3	187	253	1	15.96	110.0	1	1/4	1.40	DD STD STATIC	1.0	7.6
										BD STD STATIC	1.0	3.8
	460-60-3	414	506	1	7.76	52.0	1	1/4	0.80	BD STD STATIC	1.0	1.9
	575-60-3	518	633	1	5.71	38.9	1	1/4	0.60	BD STD STATIC	1.5	2.3
6 TON	208/230-60-3	187	253	1	19	123	1	1/3	1.92	BD STD STATIC	1.5	5.0
	460-60-3	414	506	1	9.70	62.0	1	1/3	1.20	BD STD STATIC	1.5	2.5
	575-60-3	518	633	1	7.4	50.0	1	1/3	0.90	BD STD STATIC	1.5	2.3

APPENDIX C UNIT DIMENSIONS

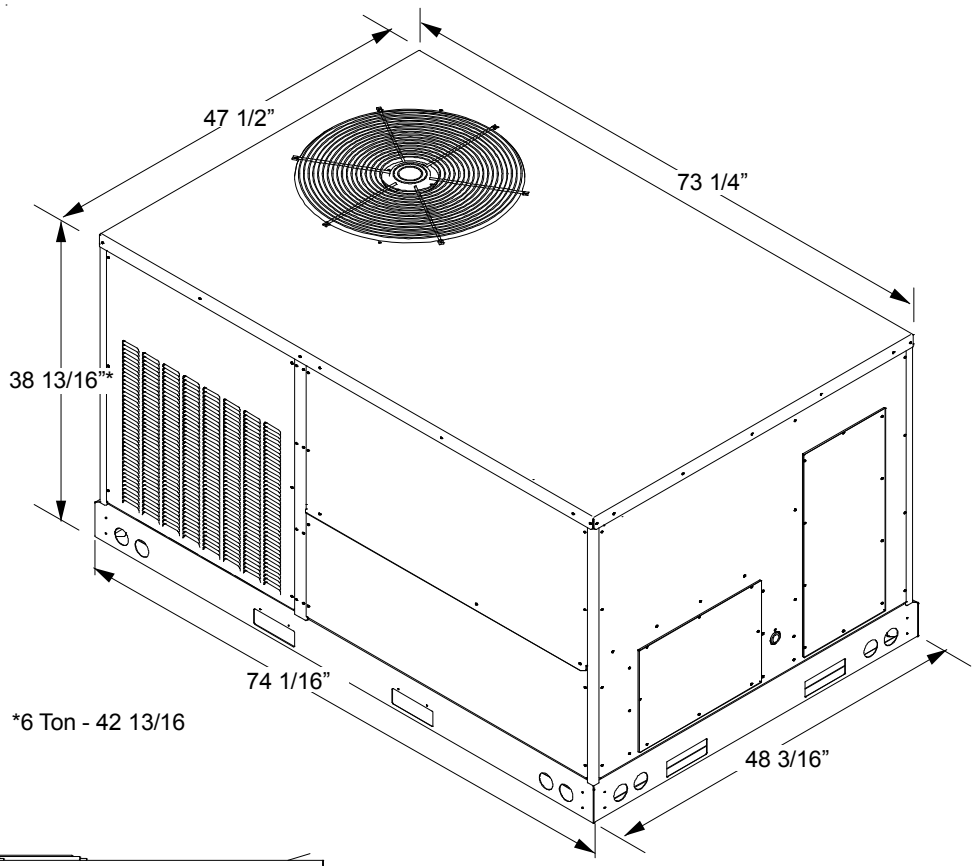

*6 Ton - 42 13/16

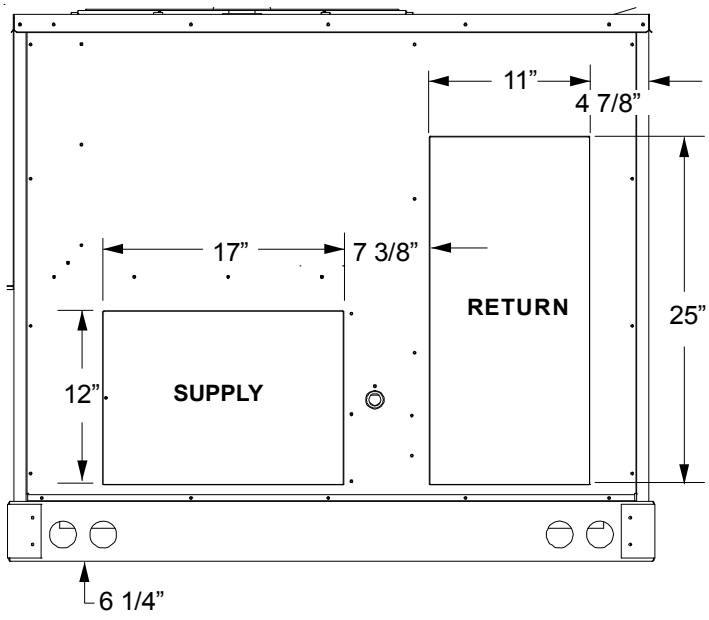

Horizontal Discharge

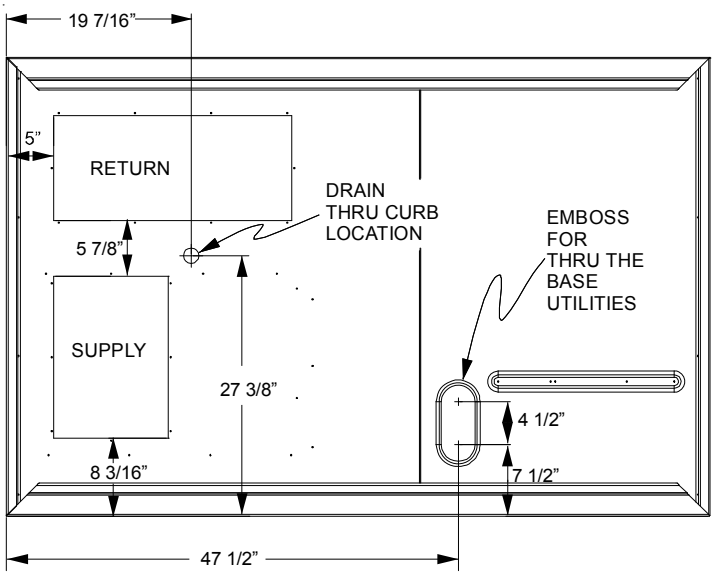

BOTTOM VIEW OF UNIT

Vertical Discharge

NOTE

Refer to IO-785 included in the literature pack for installing horizontal duct covers.

APPENDIX D WIRING DIAGRAMS

CPG036(48)0451D SINGLE PHASE 240V/60HZ **DIRECT DRIVE**

WARNING

HIGH VOLTAGE!
DISCONNECT ALL POWER BEFORE SERVICING OR INSTALLING THIS UNIT. MULTIPLE POWER SOURCES MAY BE PRESENT. FAILURE TO DO SO MAY CAUSE PROPERTY DAMAGE, PERSONAL INJURY OR DEATH.

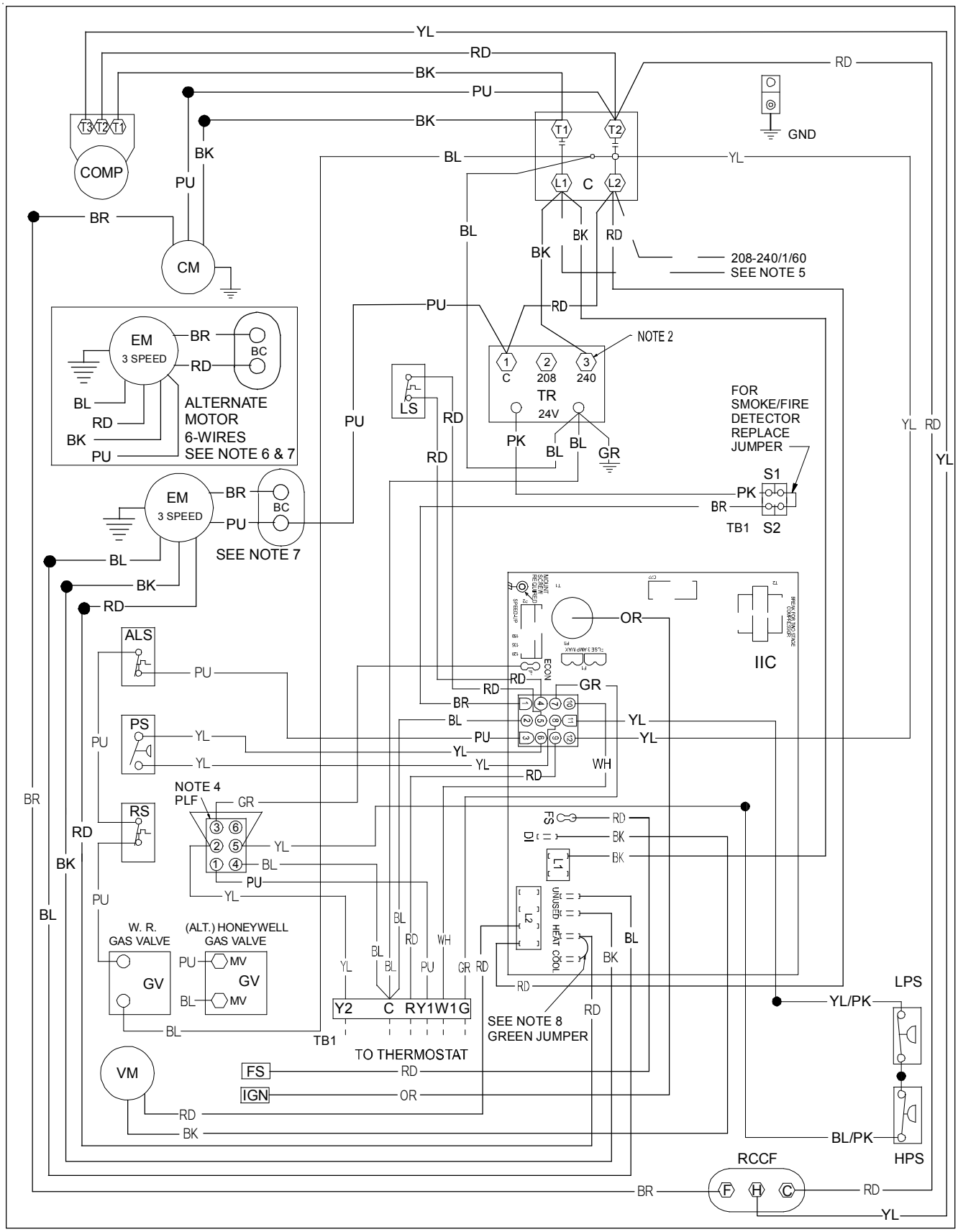

208-240/1/60 0140L00510 REV A

Wiring is subject to change. Always refer to the wiring diagram on the unit for the most up-to-date wiring.

CPG036(48)0451D SINGLE PHASE 240V/60HZ **DIRECT DRIVE**

WARNING

HIGH VOLTAGE!
DISCONNECT ALL POWER BEFORE SERVICING OR INSTALLING THIS UNIT. MULTIPLE POWER SOURCES MAY BE PRESENT. FAILURE TO DO SO MAY CAUSE PROPERTY DAMAGE, PERSONAL INJURY OR DEATH.

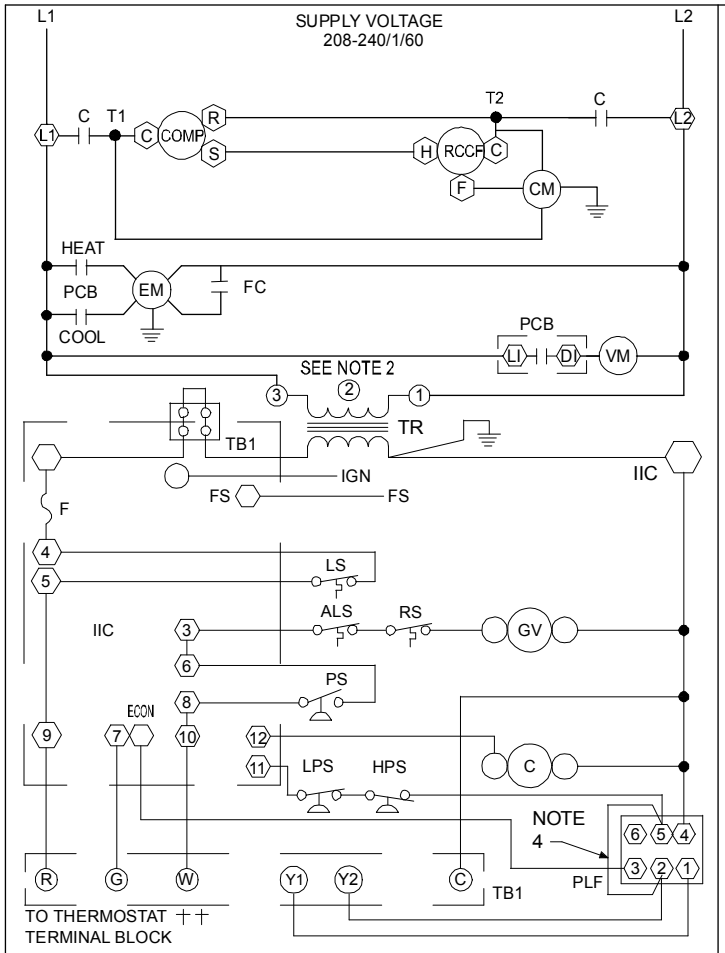

INSTALLER/SERVICEMAN

THE STATUS LIGHT ON THE FURNACE CONTROL MAY BE USED AS A GUIDE TO TROUBLESHOOTING THIS APPLIANCE. STATUS LIGHT CODES ARE AS FOLLOWS:

STATUS LIGHT	EQUIP. STATUS	CHECK
ON	NORMAL OPERATION	-
OFF	NO POWER OR INTERNAL CONTROL FAULT	CHECK INPUT POWER CHECK FUSE ON CONTROL REPLACE CONTROL
1 BLINK	IGNITION FAILURE OR OPEN ROLLOUT SWITCH OR OPEN AUX. LIMIT SWITCH	GAS FLOW GAS PRESSURE GAS VALVE FLAME SENSOR FLAME ROLLOUT BAD SWITCH AUX. LIMIT OPEN
2 BLINKS	PRESSURE SWITCH OPEN	CHECK PRESSURE SWITCH
3 BLINKS	PRESSURE SWITCH CLOSED WITHOUT INDUCER ON	CHECK PRESSURE SWITCH
4 BLINKS	OPEN LIMIT SWITCH	MAIN LIMIT OPEN BAD SWITCH
5 BLINKS	FALSE FLAME SENSED	STICKING GAS VALVE
6 BLINKS	COMPRESSOR OUTPUT DELAY	3 MIN. COMP. ANTI-CYCLE TIMER

COMPONENT LEGEND

ALS	AUXILIARY LIMIT SWITCH
COMP	COMPRESSOR
CM	CONDENSER MOTOR
C	CONTACTOR
EM	EVAPORATOR MOTOR
F	FUSE
FS	FLAME SENSOR
GND	EQUIPMENT GROUND
GV	GAS VALVE
HPS	HIGH PRESSURE SWITCH
IIC	INTEGRATED IGNITION CONTROL
IGN	IGNITOR
LS	LIMIT SWITCH
LPS	LOW PRESSURE SWITCH
PLF	FEMALE PLUG/CONNECTOR
PS	PRESSURE SWITCH
RCCF	RUN CAPACITOR FOR CONDENSER FAN
RS	ROLLOUT SWITCH
TB1	TERMINAL BLOCK (24V SIGNAL)
TR	TRANSFORMER
VM	VENT MOTOR
VMR	VENT MOTOR RELAY
BC	BLOWER CAPACITOR

NOTES

1. REPLACEMENT WIRE MUST BE THE SAME SIZE AND TYPE OF INSULATION AS ORIGINAL. (USE COPPER CONDUCTOR ONLY).
2. FOR 208 VOLT TRANSFORMER OPERATION MOVE BLACK WIRE FROM TERMINAL 3 TO TERMINAL 2 ON TRANSFORMER.
3. FOR DIFFERENT THAN FACTORY SPEED TAP. CHANGE COOLING SPEED AT COOL TERMINAL. CHANGE HEATING SPEED AT HEAT TERMINAL ON CONTROL BOARD
   3 SPEED MOTOR
   RD - LOW SPEED
   BL - MED. SPEED
   BK - HIGH SPEED
4. ACCESSORY ECONOMIZER PLUG ADJACENT TO BLOWER HOUSING IN RETURN AIR COMPARTMENT. REMOVE MALE PLUG AND ATTACH FEMALE PLUG TO ECONOMIZER ACCESSORY.
5. USE COPPER CONDUCTORS ONLY.
   ++ USE NEC CLASS 2 WIRE.
6. PURPLE WIRE CONNECTS TO TRANSFORMER (PIN 1).
7. SPEED TAP TERMINATIONS SHOWN ON DIAGRAM ARE REPRESENTATIVE, BUT ACTUAL FACTORY SETTING MAY BE DIFFERENT BASED ON HEATING VALUE AND CAPACITY OF UNIT.
8. TO RUN DIFFERENT SPEED FOR HEATING AND COOLING, DISCONNECT GEEEN JUMPER FROM "COOL" TERMINAL AND REPLACE WITH APPROPRIATE SPEED TAP. THEN PLACE DISCONNECTED END OF JUMPER ON "UNUSED" TERMINAL LEFT OPEN BY MOVING THE SPEED TAP.

SEE UNIT RATING PLATE FOR TYPE AND SIZE OF OVERCURRENT PROTECTION.

208-240/1/60 0140L00510 REV A

FACTORY WIRING

LINE VOLTAGE
LOW VOLTAGE
OPTIONAL HIGH VOLTAGE

FIELD WIRING

HIGH VOLTAGE
LOW VOLTAGE

WIRE CODE

BK BLACK
BL BLUE
BR BROWN
GR GREEN
OR ORANGE
PK PINK
PU PURPLE
RD RED
WH WHITE
YL YELLOW
BL/PK BLUE WITH PINK STRIP
YL/PK YELLOW WITH PINK STRIP

THERMOSTAT FIELD WIRING ++

NO ECONOMIZER

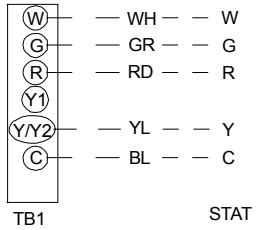

WITH ECONOMIZER OPTION

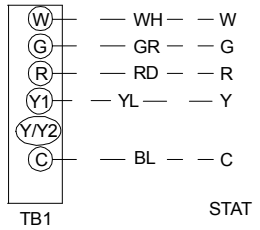

2 STAGE COOLING

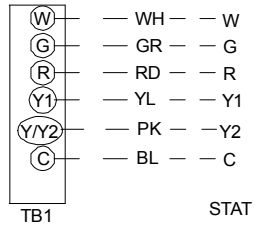

Wiring is subject to change. Always refer to the wiring diagram on the unit for the most up-to-date wiring.

CPG036(048)0901D SINGLE PHASE 240V/60HZ **DIRECT DRIVE**

WARNING

HIGH VOLTAGE!
DISCONNECT ALL POWER BEFORE SERVICING OR INSTALLING THIS UNIT. MULTIPLE POWER SOURCES MAY BE PRESENT. FAILURE TO DO SO MAY CAUSE PROPERTY DAMAGE, PERSONAL INJURY OR DEATH.

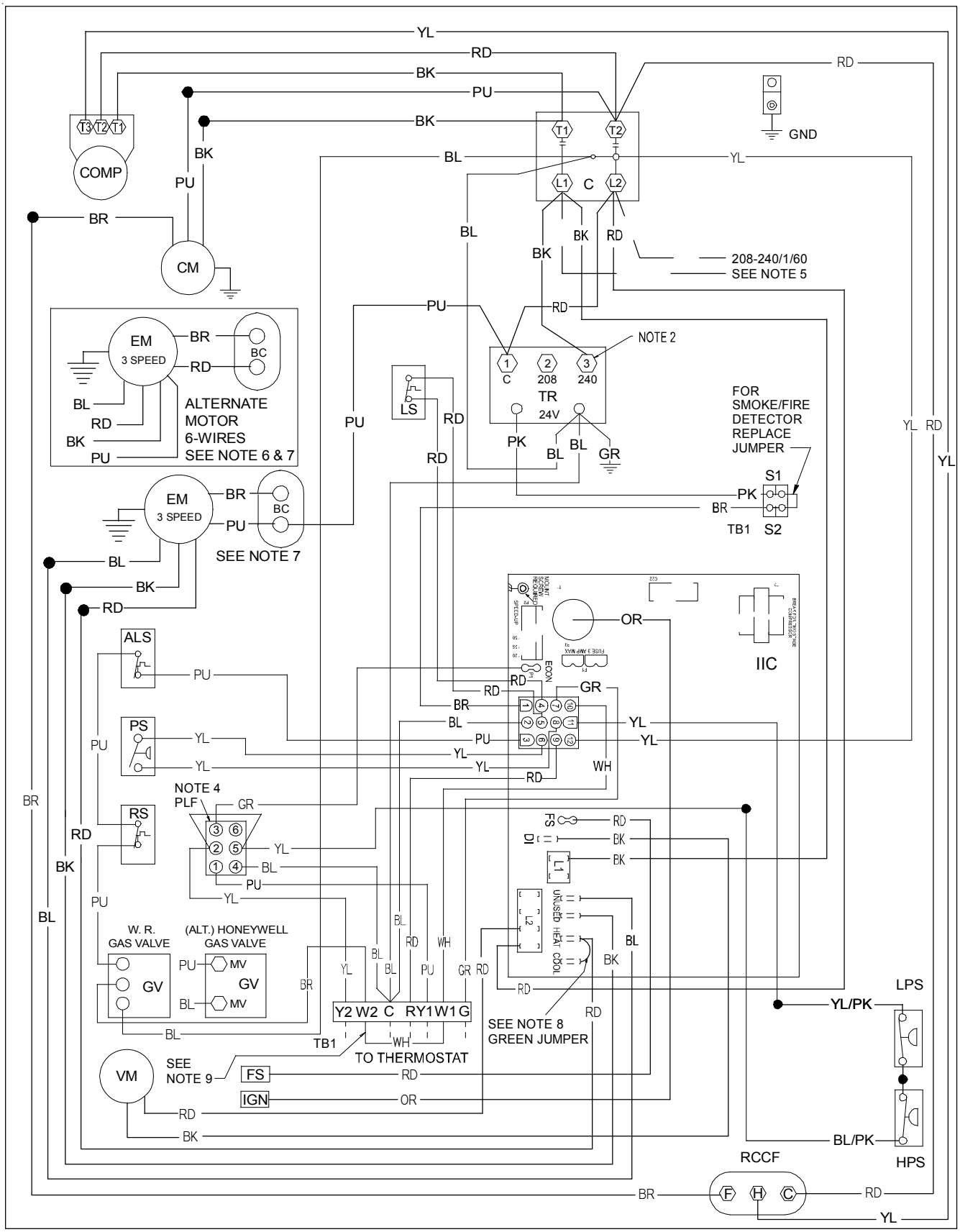

208-240/1/60 0140L00506 REV A

Wiring is subject to change. Always refer to the wiring diagram on the unit for the most up-to-date wiring.

CPG036(048)0901D SINGLE PHASE 240V/60HZ **DIRECT DRIVE**

WARNING

HIGH VOLTAGE!
DISCONNECT ALL POWER BEFORE SERVICING OR INSTALLING THIS UNIT. MULTIPLE POWER SOURCES MAY BE PRESENT. FAILURE TO DO SO MAY CAUSE PROPERTY DAMAGE, PERSONAL INJURY OR DEATH.

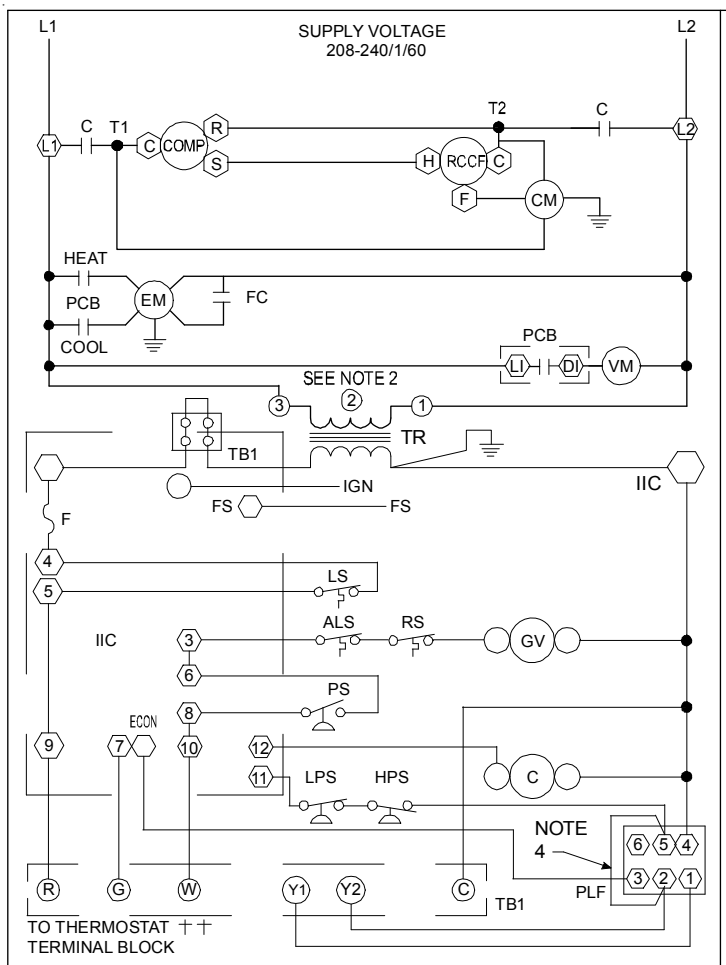

INSTALLER/SERVICEMAN

THE STATUS LIGHT ON THE FURNACE CONTROL MAY BE USED AS A GUIDE TO TROUBLESHOOTING THIS APPLIANCE. STATUS LIGHT CODES ARE ASFOLLOWS:

STATUS LIGHT	EQUIP. STATUS	CHECK
ON	NORMAL OPERATION	-
OFF	NO POWER OR INTERNAL CONTROL FAULT	CHECK INPUT POWER CHECK FUSE ON CONTROL REPLACE CONTROL
1 BLINK	IGNITION FAILURE OR OPEN ROLLOUT SWITCH OR OPEN AUX. LIMIT SWITCH	GAS FLOW GAS PRESSURE GAS VALVE FLAME SENSOR FLAME ROLLOUT BAD SWITCH AUX. LIMIT OPEN
2 BLINKS	PRESSURE SWITCH OPEN	CHECK PRESSURE SWITCH
3 BLINKS	PRESSURE SWITCH CLOSED WITHOUT INDUCER ON	CHECK PRESSURE SWITCH
4 BLINKS	OPEN LIMIT SWITCH	MAIN LIMIT OPEN BAD SWITCH
5 BLINKS	FALSE FLAME SENSED	STICKING GAS VALVE
6 BLINKS	COMPRESSOR OUTPUT DELAY	3 MIN. COMP. ANTI-CYCLE TIMER

COMPONENT LEGEND

ALS	AUXILIARY LIMIT SWITCH
COMP	COMPRESSOR
CM	CONDENSER MOTOR
C	CONTACTOR
EM	EVAPORATOR MOTOR
F	FUSE
FS	FLAME SENSOR
GND	EQUIPMENT GROUND
GV	GAS VALVE
HPS	HIGH PRESSURE SWITCH
IIC	INTEGRATED IGNITION CONTROL
IGN	IGNITOR
LS	LIMIT SWITCH
LPS	LOW PRESSURE SWITCH
PLF	FEMALE PLUG/CONNECTOR
RCCF	RUN CAPACITOR FOR CONDENSER FAN
PS	PRESSURE SWITCH
RS	ROLLOUT SWITCH
TB1	TERMINAL BLOCK (24V SIGNAL)
TR	TRANSFORMER
VM	VENT MOTOR
VMR	VENT MOTOR RELAY
BC	BLOWER CAPACITOR

NOTES

1. REPLACEMENT WIRE MUST BE THE SAME SIZE AND TYPE OF INSULATION AS ORIGINAL. (USE COPPER CONDUCTOR ONLY).
2. FOR 208 VOLT TRANSFORMER OPERATION MOVE BLACK WIRE FROM TERMINAL 3 TO TERMINAL 2 ON TRANSFORMER.
3. FOR DIFFERENT THAN FACTORY SPEED TAP. CHANGE COOLING SPEED AT COOL TERMINAL. CHANGE HEATING SPEED AT HEAT TERMINAL ON CONTROL BOARD
   3 SPEED MOTOR
   RD - LOW SPEED
   BL - MED. SPEED
   BK - HIGH SPEED
4. ACCESSORY ECONOMIZER PLUG ADJACENT TO BLOWER HOUSING IN RETURN AIR COMPARTMENT. REMOVE MALE PLUG AND ATTACH FEMALE PLUG TO ECONOMIZER ACCESSORY.
5. USE COPPER CONDUCTORS ONLY.
   ++ USE NEC CLASS 2 WIRE.
6. PURPLE WIRE CONNECTS TO TRANSFORMER (PIN 1).
7. SPEED TAP TERMINATIONS SHOWN ON DIAGRAM ARE REPRESENTATIVE, BUT ACTUAL FACTORY SETTING MAY BE DIFFERENT BASED ON HEATING VALUE AND CAPACITY OF UNIT.
8. TO RUN DIFFERENT SPEED FOR HEATING AND COOLING, DISCONNECT GEEEN JUMPER FROM "COOL" TERMINAL AND REPLACE WITH APPROPRIATE SPEED TAP. THEN PLACE DISCONNECTED END OF JUMPER ON "UNUSED" TERMINAL LEFT OPEN BY MOVING THE SPEED TAP.
9. FOR LOW STAGE OPERATION ONLY, REMOVE WHITE JUMPER. FOR 2 STAGE OPERATION, REMOVE JUMPER AND CONNECT W2 TO W1 ON THERMOSTAT.

SEE UNIT RATING PLATE FOR TYPE AND SIZE OF OVERCURRENT PROTECTION.

208-240/1/60 0140L00506 REV A

FACTORY WIRING

LINE VOLTAGE
LOW VOLTAGE
OPTIONAL HIGH VOLTAGE

FIELD WIRING

HIGH VOLTAGE
LOW VOLTAGE

WIRE CODE

BK BLACK
BL BLUE
BR BROWN
GR GREEN
OR ORANGE
PK PINK
PU PURPLE
RD RED
WH WHITE
YL YELLOW
BL/PK BLUE WITH PINK STRIP
YL/PK YELLOW WITH PINK STRIP

THERMOSTAT FIELD WIRING ++

NO ECONOMIZER

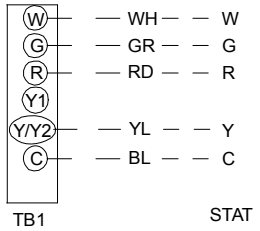

WITH ECONOMIZER OPTION

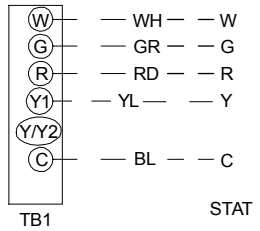

2 STAGE COOLING

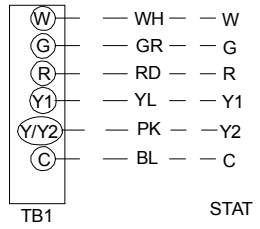

Wiring is subject to change. Always refer to the wiring diagram on the unit for the most up-to-date wiring.

CPG0060*1D SINGLE PHASE 240V/60HZ **DIRECT DRIVE**

WARNING

HIGH VOLTAGE!
DISCONNECT ALL POWER BEFORE SERVICING OR INSTALLING THIS UNIT. MULTIPLE POWER SOURCES MAY BE PRESENT. FAILURE TO DO SO MAY CAUSE PROPERTY DAMAGE, PERSONAL INJURY OR DEATH.

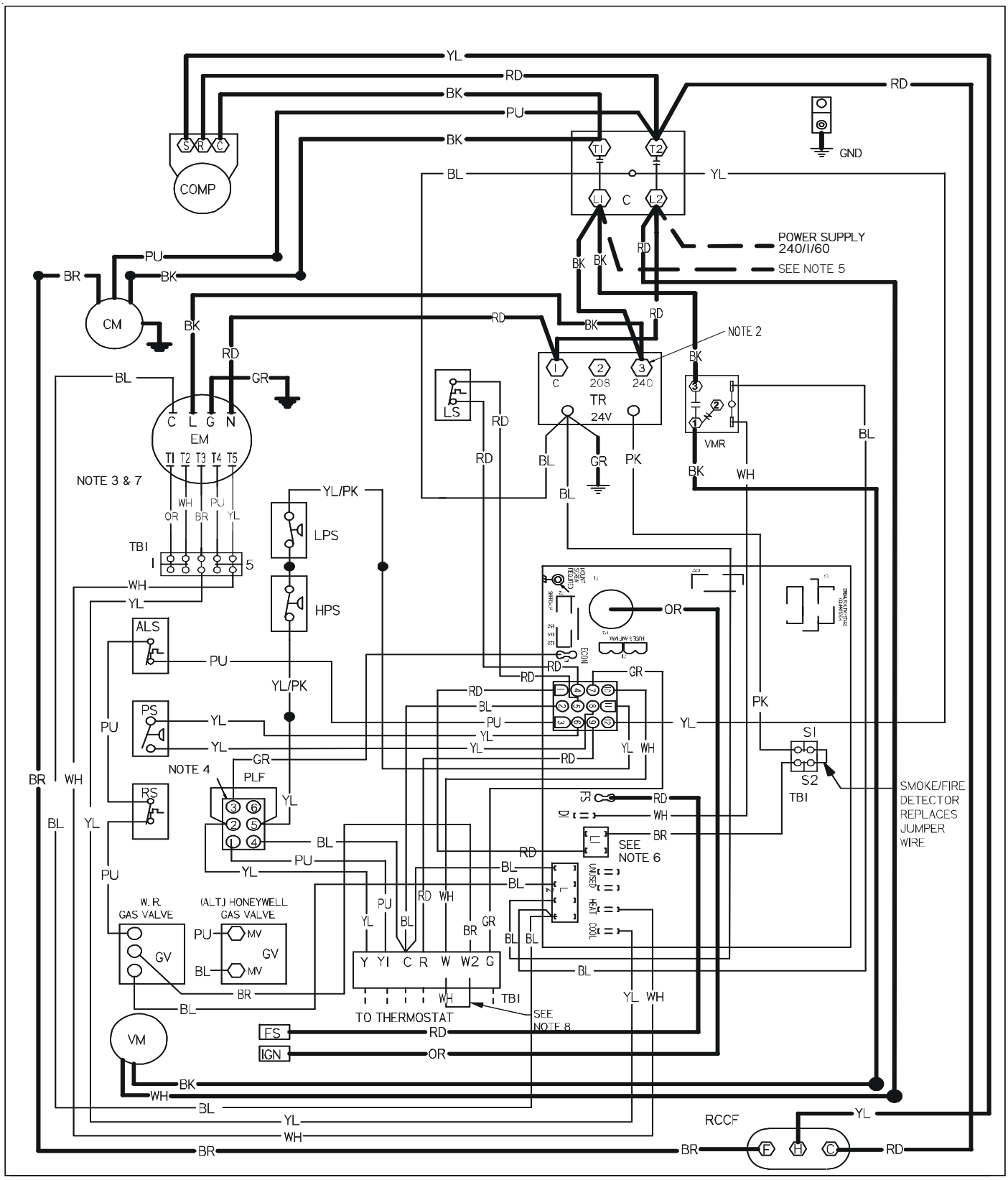

Wiring is subject to change. Always refer to the wiring diagram on the unit for the most up-to-date wiring.

CPG0060*1D SINGLE PHASE 240V/60HZ **DIRECT DRIVE**

WARNING

HIGH VOLTAGE!
DISCONNECT ALL POWER BEFORE SERVICING OR INSTALLING THIS UNIT. MULTIPLE POWER SOURCES MAY BE PRESENT. FAILURE TO DO SO MAY CAUSE PROPERTY DAMAGE, PERSONAL INJURY OR DEATH.

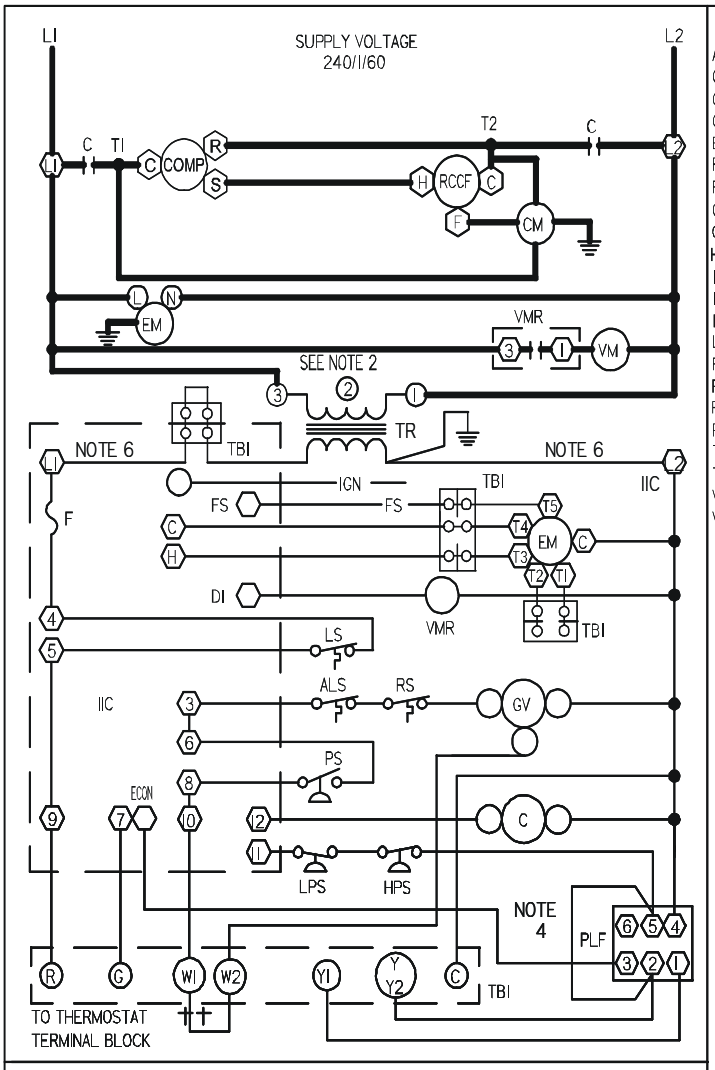

COMPONENT LEGEND

ALS	AUXILIARY LIMIT SWITCH
COMP	COMPRESSOR
CM	CONDENSER MOTOR
C	CONTACTOR
EM	EVAPORATOR MOTOR
F	FUSE
FS	FLAME SENSOR
GND	EQUIPMENT GROUND
GV	GAS VALVE
HPS	HIGH PRESSURE SWITCH
IIC	INTEGRATED IGNITION CONTROL
IGN	IGNITOR
LPS	LOW PRESSURE SWITCH
LS	LIMIT SWITCH
PLF	FEMALE PLUG/CONNECTOR
PS	PRESSURE SWITCH
RCCF	RUN CAPACITOR FOR COMPRESSOR/FAN
RS	ROLLOUT SWITCH
TBI	TERMINAL BLOCK (24V SIGNAL)
TR	TRANSFORMER
VM	VENT MOTOR
VMR	VENT MOTOR RELAY

NOTES

1. REPLACEMENT WIRE MUST BE THE SAME SIZE AND TYPE OF INSULATION AS ORIGINAL. (USE COPPER CONDUCTOR ONLY).
2. FOR 208 VOLT TRANSFORMER OPERATION MOVE BLACK WIRE FROM TERMINAL (3) TO TERMINAL (2) ON TRANSFORMER.
3. FOR DIFFERENT THAN FACTORY SPEED TAP. CHANGE COOLING SPEED AT MOTOR T4 AND T5 TERMINALS. CHANGE HEATING SPEED AT MOTOR TI. T2, AND T3 TERMINALS

   COOLING SPEED (YELLOW WIRE)
   T3 - LOW SPEED
   T4 - HIGH SPEED

   HEATING SPEED (WHITE WIRE)
   TI - LOW SPEED (070)
   T2 - MED. SPEED
   T5 - HIGH SPEED (140)
4. ACCESSORY ECONOMIZER PLUG ADJACENT TO BLOWER HOUSING IN RETURN AIR COMPARTMENT. REMOVE MALE PLUG AND ATTACH FEMALE PLUG TO ECONOMIZER ACCESSORY.
5. USE COPPER CONDUCTORS ONLY.
   ++ USE NEC CLASS 2 WIRE.
6. L1 AND L2 ON ICC CONTROL IS 24V INPUT.
7. SPEED TAP TERMINATIONS SHOWN ON DIAGRAM ARE REPRESENTATIVE, BUT ACTUAL FACTORY SETTINGS MAY BE DIFFERENT BASED ON THE HEATING VALUE OF THE UNIT.
8. FOR LOW STAGE OPERATION ONLY, REMOVE WHITE JUMPER. FOR 2 STAGE OPERATION, REMOVE JUMPER AND CONNECT W2 TO W2 ON THERMOSTAT.

SEE UNIT RATING PLATE FOR TYPE AND SIZE OF OVER CURRENT PROTECTION .

240/1/60 0140L02105-A

FACTORY WIRING
LINE VOLTAGE
LOW VOLTAGE

FIELD WIRING
HIGH VOLTAGE
LOW VOLTAGE

WIRE CODE

BK	BLACK
BL	BLUE
BR	BROWN
GR	GREEN
OR	ORANGE
PK	PINK
PU	PURPLE
RD	RED
WH	WHITE
YL	YELLOW
BL/PK	BLUE WITH PINK STRIP
YL/PK	YELLOW WITH PINK STRIP

THERMOSTAT FIELD WIRING ++

NO ECONOMIZER

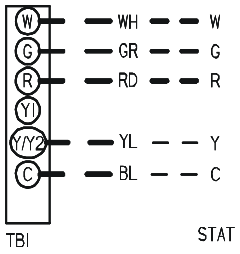

WITH ECONOMIZER OPTION

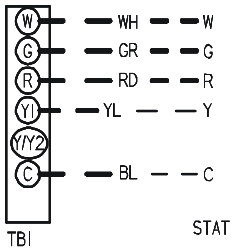

2 STAGE COOLING

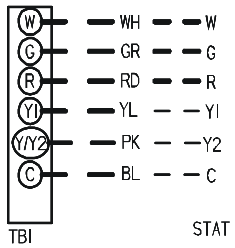

INSTALLER/SERVICEMAN

THE STATUS LIGHT ON THE FURNACE CONTROL MAY BE USED AS A GUIDE TO TROUBLESHOOTING THIS APPLIANCE. STATUS LIGHT CODES ARE AS FOLLOWS:

STATUS LIGHT	EQUIP. STATUS	CHECK
ON	NORMAL OPERATION	-
OFF	NO POWER OR INTERNAL CONTROL FAULT	CHECK INPUT POWER CHECK FUSE ON CONTROL REPLACE CONTROL
1 BLINK	IGNITION FAILURE OR OPEN ROLLOUT SWITCH OR OPEN AUX. LIMIT SWITCH	GAS FLOW GAS PRESSURE GAS VALVE FLAME SENSOR FLAME ROLLOUT BAD SWITCH AUX. LIMIT OPEN
2 BLINKS	PRESSURE SWITCH OPEN	CHECK PRESSURE SWITCH
3 BLINKS	PRESSURE SWITCH CLOSED WITHOUT INDUCER ON	CHECK PRESSURE SWITCH
4 BLINKS	OPEN LIMIT SWITCH	MAIN LIMIT OPEN BAD SWITCH
5 BLINKS	FALSE FLAME SENSED	STICKING GAS VALVE
6 BLINKS	COMPRESSOR OUTPUT DELAY	3 MIN. COMP. ANTI-CYCLE TIMER

Wiring is subject to change. Always refer to the wiring diagram on the unit for the most up-to-date wiring.

CPG060*3D THREE PHASE 208-230V/60HZ **DIRECT**

WARNING

HIGH VOLTAGE!
DISCONNECT ALL POWER BEFORE SERVICING OR INSTALLING THIS UNIT. MULTIPLE POWER SOURCES MAY BE PRESENT. FAILURE TO DO SO MAY CAUSE PROPERTY DAMAGE, PERSONAL INJURY OR DEATH.

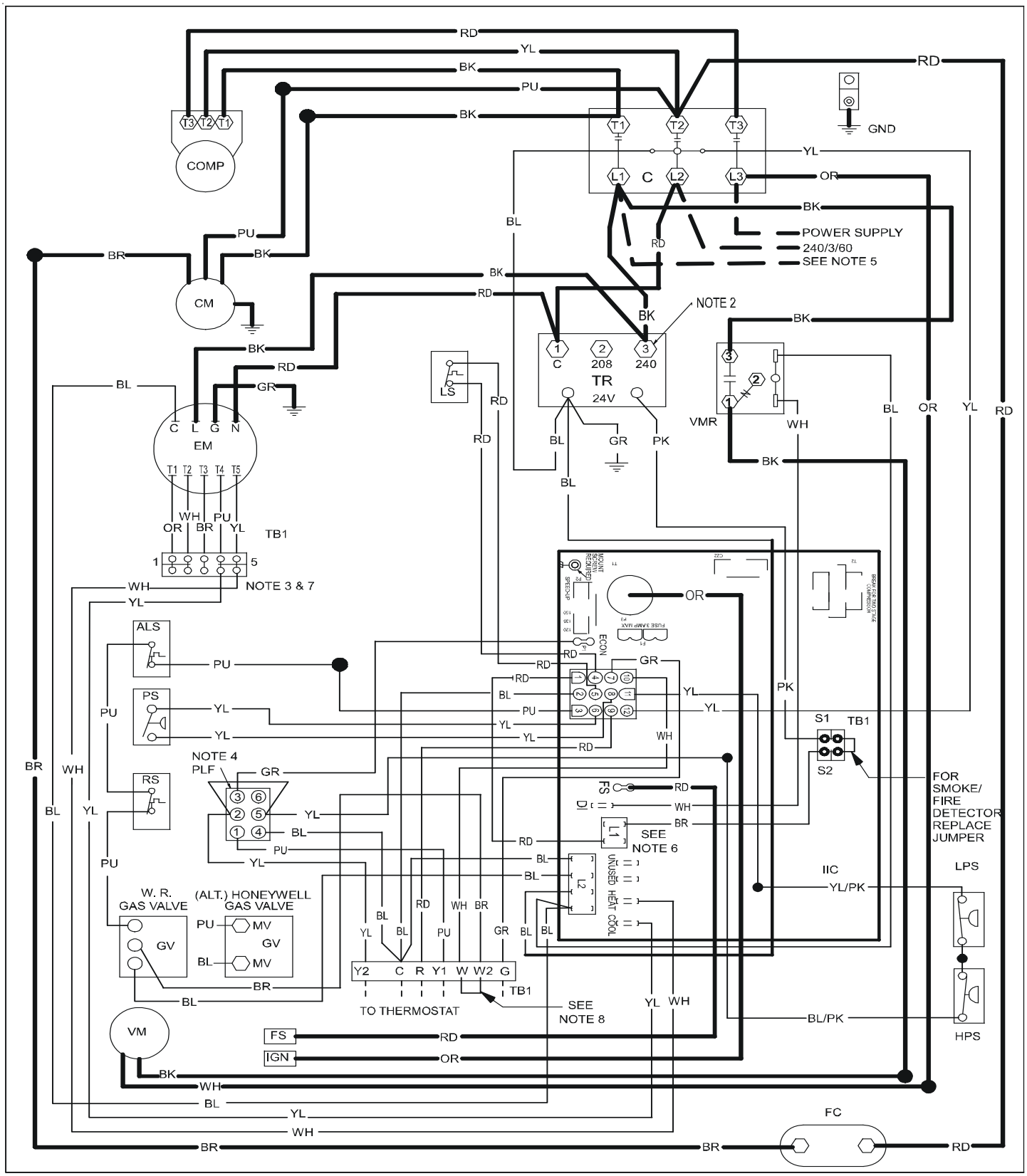

230/3/60 0140L02106-A

Wiring is subject to change. Always refer to the wiring diagram on the unit for the most up-to-date wiring.

CPG060*3D THREE PHASE 208-230V/60HZ **DIRECT DRIVE**

WARNING

HIGH VOLTAGE!
DISCONNECT ALL POWER BEFORE SERVICING OR INSTALLING THIS UNIT. MULTIPLE POWER SOURCES MAY BE PRESENT. FAILURE TO DO SO MAY CAUSE PROPERTY DAMAGE, PERSONAL INJURY OR DEATH.

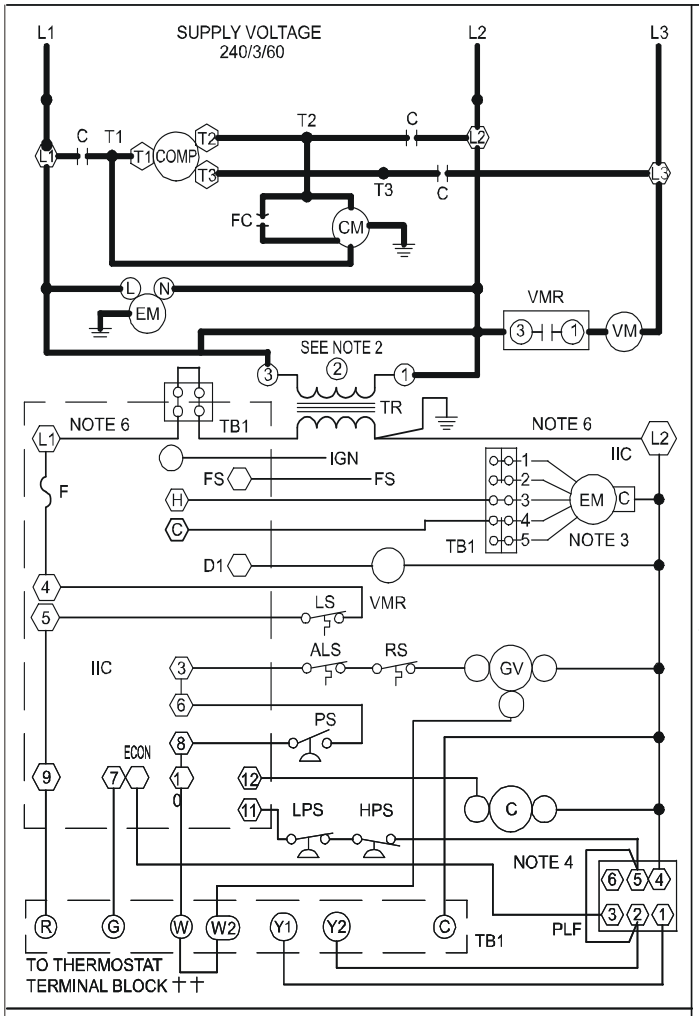

INSTALLER/SERVICEMAN

THE STATUS LIGHT ON THE FURNACE CONTROL MAY BE USED AS A GUIDE TO TROUBLESHOOTING THIS APPLIANCE. STATUS LIGHT CODES ARE AS FOLLOWS:

STATUS LIGHT	EQUIP. STATUS	CHECK
ON	NORMAL OPERATION	-
OFF	NO POWER OR INTERNAL CONTROL FAULT	CHECK INPUT POWER CHECK FUSE ON CONTROL REPLACE CONTROL
1 BLINK	IGNITION FAILURE OR OPEN ROLLOUT SWITCH OR OPEN AUX. LIMIT SWITCH	GAS FLOW GAS PRESSURE GAS VALVE FLAME SENSOR FLAME ROLLOUT BAD SWITCH AUX. LIMIT OPEN
2 BLINKS	PRESSURE SWITCH OPEN	CHECK PRESSURE SWITCH
3 BLINKS	PRESSURE SWITCH CLOSED WITHOUT INDUCER ON	CHECK PRESSURE SWITCH
4 BLINKS	OPEN LIMIT SWITCH	MAIN LIMIT OPEN BAD SWITCH
5 BLINKS	FALSE FLAME SENSED	STICKING GAS VALVE
6 BLINKS	COMPRESSOR OUTPUT DELAY	3 MIN. COMP. ANTI-CYCLE TIMER

COMPONENT LEGEND

ALS	AUXILIARY LIMIT SWITCH
COMP	COMPRESSOR
CM	CONDENSER MOTOR
C	CONTACTOR
EM	EVAPORATOR MOTOR
F	FUSE
FC	FAN CAPACITOR
FS	FLAME SENSOR
GND	EQUIPMENT GROUND
GV	GAS VALVE
HPS	HIGH PRESSURE SWITCH
IIC	INTEGRATED IGNITION CONTROL
IGN	IGNITOR
LS	LIMIT SWITCH
LPS	LOW PRESSURE SWITCH
PLF	FEMALE PLUG/CONNECTOR
PS	PRESSURE SWITCH
RS	ROLLOUT SWITCH
TB1	TERMINAL BLOCK (24V SIGNAL)
TR	TRANSFORMER
VM	VENT MOTOR
VMR	VENT MOTOR RELAY

NOTES

1. REPLACEMENT WIRE MUST BE THE SAME SIZE AND TYPE OF INSULATION AS ORIGINAL. (USE COPPER CONDUCTOR ONLY).
2. FOR 208 VOLT TRANSFORMER OPERATION MOVE BLACK WIRES FROM TERMINAL (3) TO TERMINAL (2) ON TRANSFORMER.
3. FOR DIFFERENT THAN FACTORY SPEED TAP. CHANGE COOLING SPEED AT MOTOR T3 AND T4 TERMINALS. CHANGE HEATING SPEED AT MOTOR T1. T2, AND T5 TERMINALS

   COOLING SPEED (YELLOW WIRE)
   T3 - LOW SPEED
   T4 - HIGH SPEED

   HEATING SPEED (WHITE WIRE)
   T1 - LOW SPEED (070)
   T2 - MED. SPEED
   T5 - HIGH SPEED (140)
4. ACCESSORY ECONOMIZER PLUG ADJACENT TO BLOWER HOUSING IN RETURN AIR COMPARTMENT. REMOVE MALE PLUG AND ATTACH FEMALE PLUG TO ECONOMIZER ACCESSORY.
5. USE COPPER CONDUCTORS ONLY.
   ++ USE NEC CLASS 2 WIRE.
6. L1 AND L2 ON ICC CONTROL IS 24V INPUT.
7. SPEED TAP TERMINATIONS SHOWN ON DIAGRAM ARE REPRESENTATIVE, BUT ACTUAL FACTORY SETTINGS MAY BE DIFFERENT BASED ON THE HEATING VALUE OF THE UNIT.
8. FOR LOW STAGE OPERATION ONLY, REMOVE WHITE JUMPER. FOR 2 STAGE OPERATION, REMOVE JUMPER AND CONNECT W2 TO W2 ON THERMOSTAT.

SEE UNIT RATING PLATE FOR TYPE AND SIZE OF OVER CURRENT PROTECTION

230/3/60 0140L02106-A

FACTORY WIRING
LINE VOLTAGE
LOW VOLTAGE

FIELD WIRING
HIGH VOLTAGE
LOW VOLTAGE

WIRE CODE

BK	BLACK
BL	BLUE
BR	BROWN
GR	GREEN
OR	ORANGE
PK	PINK
PU	PURPLE
RD	RED
WH	WHITE
YL	YELLOW
BL/PK	BLUE WITH PINK STRIP
YL/PK	YELLOW WITH PINK STRIP

THERMOSTAT
FIELD WIRING ++

NO ECONOMIZER

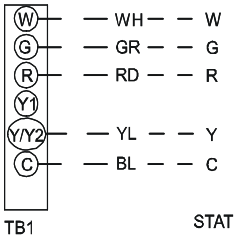

WITH ECONOMIZER OPTION

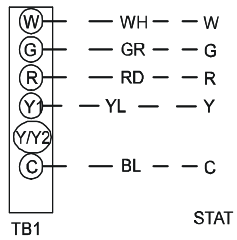

2 STAGE COOLING

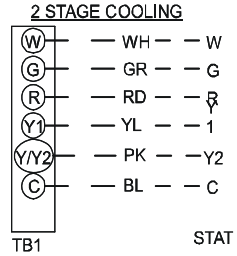

Wiring is subject to change. Always refer to the wiring diagram on the unit for the most up-to-date wiring.

CPG036(048)*3D THREE PHASE 208-230V/60HZ **DIRECT DRIVE**

WARNING

HIGH VOLTAGE!
DISCONNECT ALL POWER BEFORE SERVICING OR INSTALLING THIS UNIT. MULTIPLE POWER SOURCES MAY BE PRESENT. FAILURE TO DO SO MAY CAUSE PROPERTY DAMAGE, PERSONAL INJURY OR DEATH.

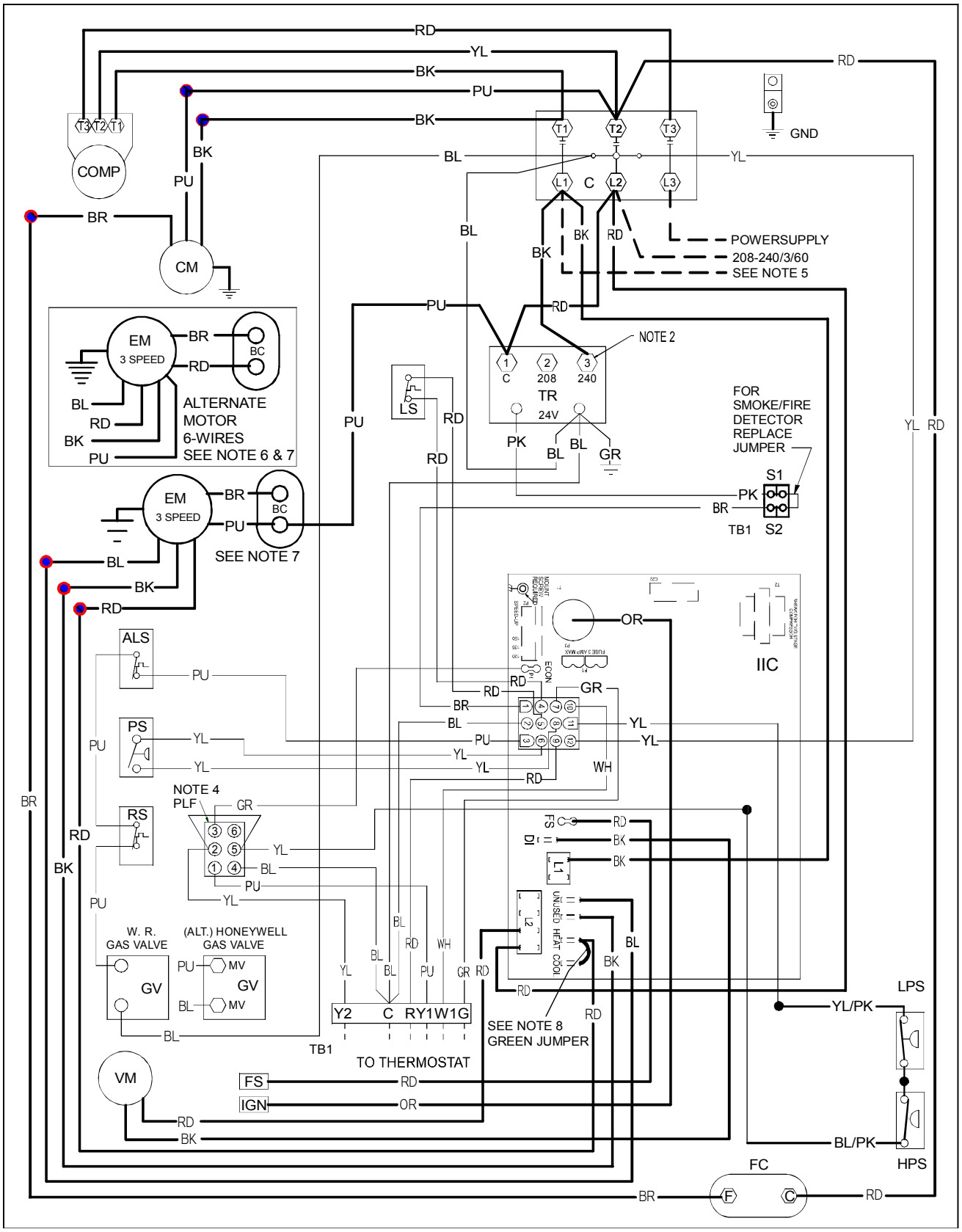

208-240/3/60 0140L00512 REV B

Wiring is subject to change. Always refer to the wiring diagram on the unit for the most up-to-date wiring.

CPG036(048)*3D THREE PHASE 208-230V/60HZ **DIRECT DRIVE**

WARNING

HIGH VOLTAGE!
DISCONNECT ALL POWER BEFORE SERVICING OR INSTALLING THIS UNIT. MULTIPLE POWER SOURCES MAY BE PRESENT. FAILURE TO DO SO MAY CAUSE PROPERTY DAMAGE, PERSONAL INJURY OR DEATH.

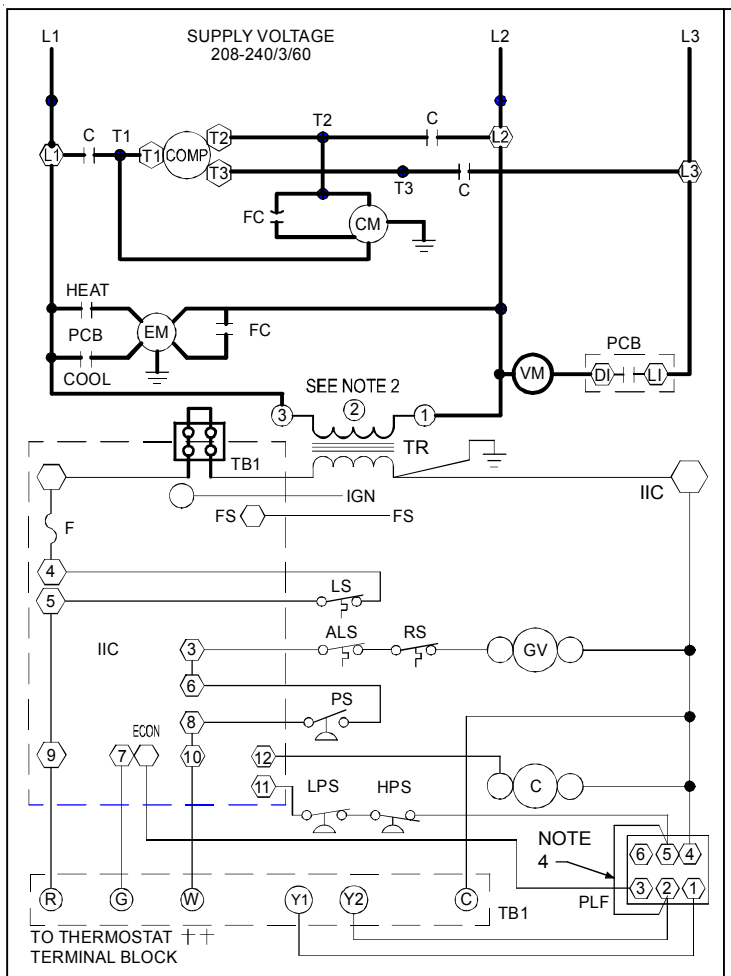

COMPONENT LEGEND

ALS	AUXILLARY LIMIT SWITCH
COMP	COMPRESSOR
CM	CONDENSER MOTOR
C	CONTACTOR
EM	EVAPORATOR MOTOR
F	FUSE
FC	FAN CAPACITOR
FS	FLAME SENSOR
GND	EQUIPMENT GROUND
GV	GAS VALVE
HPS	HIGH PRESSURE SWITCH
IIC	INTEGRATED IGNITION CONTROL
IGN	IGNITOR
LS	LIMIT SWITCH
LPS	LOW PRESSURE SWITCH
PLF	FEMALE PLUG/CONNECTOR
PS	PRESSURE SWITCH
RS	ROLLOUT SWITCH
TB1	TERMINAL BLOCK (24V SIGNAL)
TR	TRANSFORMER
VM	VENT MOTOR
VMR	VENT MOTOR RELAY
BC	BLOWER CAPACITOR

NOTES

1. REPLACEMENT WIRE MUST BE THE SAME SIZE AND TYPE OF INSULATION AS ORIGINAL. (USE COPPER CONDUCTOR ONLY).
2. FOR 208 VOLT TRANSFORMER OPERATION MOVE BLACK WIRE FROM TERMINAL 3 TO TERMINAL 2 ON TRANSFORMER.
3. FOR DIFFERENT THAN FACTORY SPEED TAP. CHANGE COOLING SPEED AT COOL TERMINAL. CHANGE HEATING SPEED AT HEAT TERMINAL ON CONTROL BOARD
   3 SPEED MOTOR
   RD - LOW SPEED
   BL - MED. SPEED
   BK - HIGH SPEED
4. ACCESSORY ECONOMIZER PLUG ADJACENT TO BLOWER HOUSING IN RETURN AIR COMPARTMENT. REMOVE MALE PLUG AND ATTACH FEMALE PLUG TO ECONOMIZER ACCESSORY.
5. USE COPPER CONDUCTORS ONLY.
   ++ USE NEC CLASS 2 WIRE.
6. PURPLE WIRE CONNECTS TO TRANSFORMER (PIN 1).
7. SPEED TAP TERMINATIONS SHOWN ON DIAGRAM ARE REPRESENTATIVE, BUT ACTUAL FACTORY SETTING MAY BE DIFFERENT BASED ON HEATING VALUE AND CAPACITY OF UNIT.
8. TO RUN DIFFERENT SPEED FOR HEATING AND COOLING, DISCONNECT GEEEN JUMPER FROM "COOL" TERMINAL AND REPLACE WITH APPROPRIATE SPEED TAP. THEN PLACE DISCONNECTED END OF JUMPER ON "UNUSED" TERMINAL LEFT OPEN BY MOVING THE SPEED TAP.

SEE UNIT RATING PLATE FOR TYPE AND SIZE OF OVERCURRENT PROTECTION.

208-240/3/60 0140L00512 REV B

FACTORY WIRING
- LINE VOLTAGE
- LOW VOLTAGE
- OPTIONAL HIGH VOLTAGE

FIELD WIRING
- HIGH VOLTAGE
- LOW VOLTAGE

WIRE CODE

BK	BLACK
BL	BLUE
BR	BROWN
GR	GREEN
OR	ORANGE
PK	PINK
PU	PURPLE
RD	RED
WH	WHITE
YL	YELLOW
BL/PK	BLUE WITH PINK STRIP
YL/PK	YELLOW WITH PINK STRIP

THERMOSTAT FIELD WIRING ++

NO ECONOMIZER

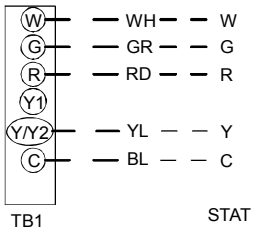

WITH ECONOMIZER OPTION

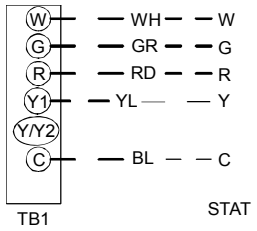

2 STAGE COOLING

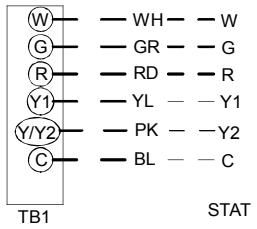

INSTALLER/SERVICEMAN

THE STATUS LIGHT ON THE FURNACE CONTROL MAY BE USED AS A GUIDE TO TROUBLESHOOTING THIS APPLIANCE. STATUS LIGHT CODES ARE AS FOLLOWS:

STATUS LIGHT	EQUIP. STATUS	CHECK
ON	NORMAL OPERATION	-
OFF	NO POWER OR INTERNAL CONTROL FAULT	CHECK INPUT POWER CHECK FUSE ON CONTROL REPLACE CONTROL
1 BLINK	IGNITION FAILURE OR OPEN ROLLOUT SWITCH OR OPEN AUX. LIMIT SWITCH	GAS FLOW GAS PRESSURE GAS VALVE FLAME SENSOR FLAME ROLLOUT BAD SWITCH AUX. LIMIT OPEN
2 BLINKS	PRESSURE SWITCH OPEN	CHECK PRESSURE SWITCH
3 BLINKS	PRESSURE SWITCH CLOSED WITHOUT INDUCER ON	CHECK PRESSURE SWITCH
4 BLINKS	OPEN LIMIT SWITCH	MAIN LIMIT OPEN BAD SWITCH
5 BLINKS	FALSE FLAME SENSED	STICKING GAS VALVE
6 BLINKS	COMPRESSOR OUTPUT DELAY	3 MIN. COMP. ANTI-CYCLE TIMER

Wiring is subject to change. Always refer to the wiring diagram on the unit for the most up-to-date wiring.

CPG036(048)*3D THREE PHASE 230V/60HZ **DIRECT DRIVE**

WARNING

HIGH VOLTAGE!
DISCONNECT ALL POWER BEFORE SERVICING OR INSTALLING THIS UNIT. MULTIPLE POWER SOURCES MAY BE PRESENT. FAILURE TO DO SO MAY CAUSE PROPERTY DAMAGE, PERSONAL INJURY OR DEATH.

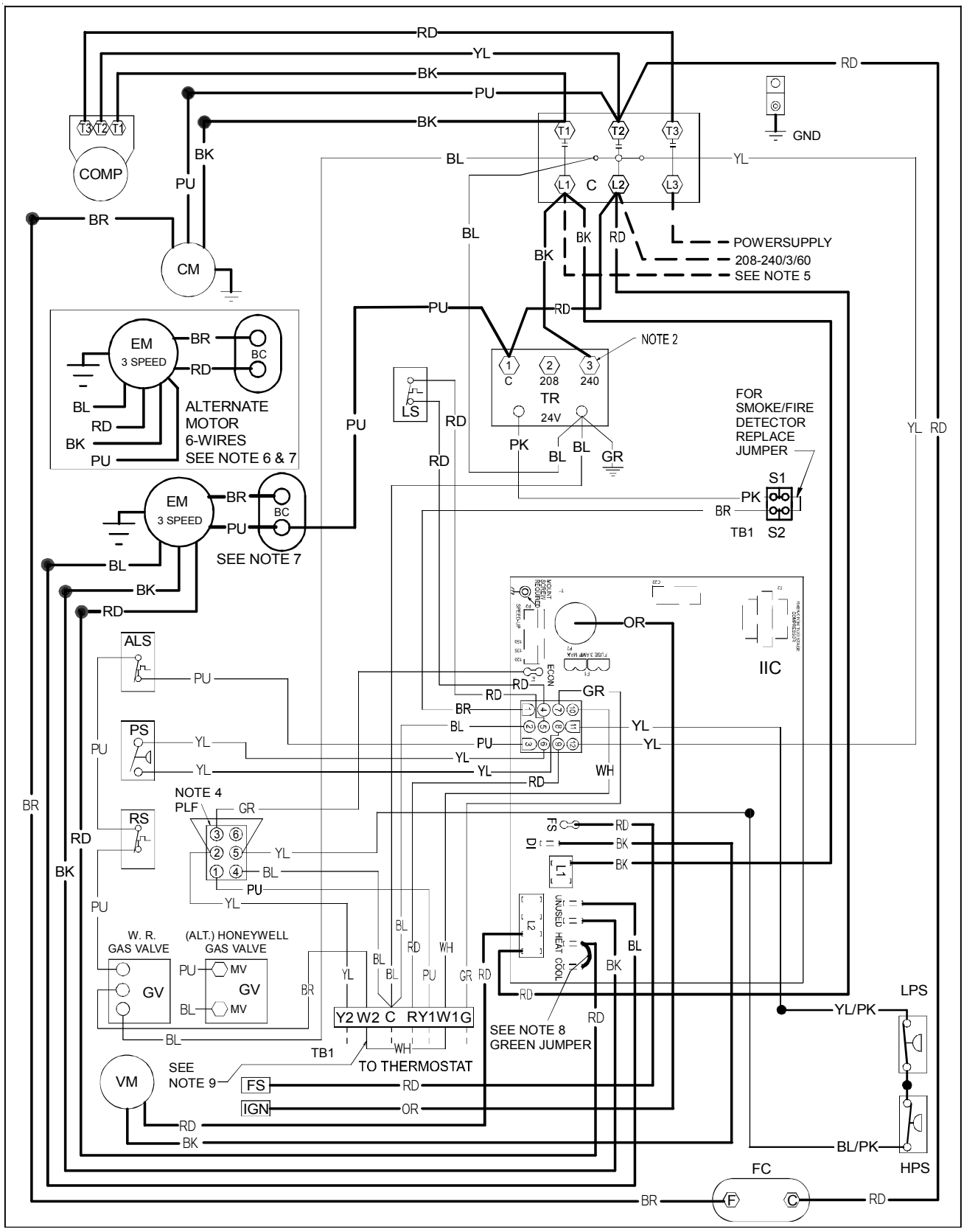

208-240/3/60 0140L00507 REV B

Wiring is subject to change. Always refer to the wiring diagram on the unit for the most up-to-date wiring.

CPG036(048)*3D THREE PHASE 230V/60HZ **DIRECT DRIVE**

WARNING

HIGH VOLTAGE!
DISCONNECT ALL POWER BEFORE SERVICING OR INSTALLING THIS UNIT. MULTIPLE POWER SOURCES MAY BE PRESENT. FAILURE TO DO SO MAY CAUSE PROPERTY DAMAGE, PERSONAL INJURY OR DEATH.

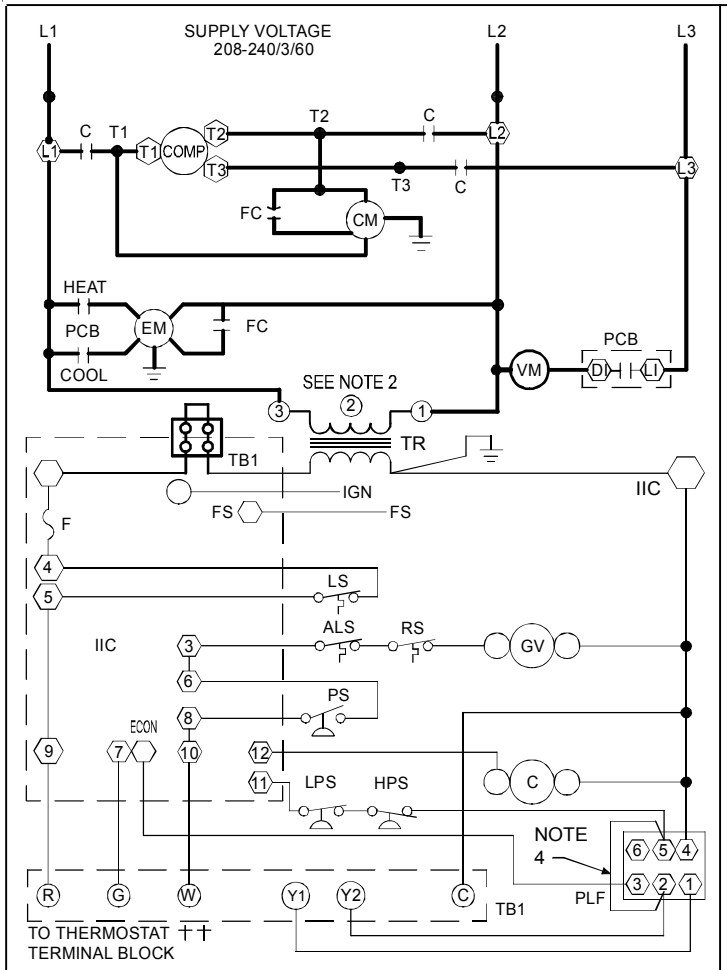

INSTALLER/SERVICEMAN

THE STATUS LIGHT ON THE FURNACE CONTROL MAY BE USED AS A GUIDE TO TROUBLESHOOTING THIS APPLIANCE. STATUS LIGHT CODES ARE AS FOLLOWS:

STATUS LIGHT	EQUIP. STATUS	CHECK
ON	NORMAL OPERATION	-
OFF	NO POWER OR INTERNAL CONTROL FAULT	CHECK INPUT POWER CHECK FUSE ON CONTROL REPLACE CONTROL
1 BLINK	IGNITION FAILURE OR OPEN ROLLOUT SWITCH OR OPEN AUX. LIMIT SWITCH	GAS FLOW GAS PRESSURE GAS VALVE FLAME SENSOR FLAME ROLLOUT BAD SWITCH AUX. LIMIT OPEN
2 BLINKS	PRESSURE SWITCH OPEN	CHECK PRESSURE SWITCH
3 BLINKS	PRESSURE SWITCH CLOSED WITHOUT INDUCER ON	CHECK PRESSURE SWITCH
4 BLINKS	OPEN LIMIT SWITCH	MAIN LIMIT OPEN BAD SWITCH
5 BLINKS	FALSE FLAME SENSED	STICKING GAS VALVE
6 BLINKS	COMPRESSOR OUTPUT DELAY	3 MIN. COMP. ANTI-CYCLE TIMER

COMPONENT LEGEND

ALS	AUXILIARY LIMIT SWITCH
COMP	COMPRESSOR
CM	CONDENSER MOTOR
C	CONTACTOR
EM	EVAPORATOR MOTOR
F	FUSE
FC	FAN CAPACITOR
FS	FLAME SENSOR
GND	EQUIPMENT GROUND
GV	GAS VALVE
HPS	HIGH PRESSURE SWITCH
IIC	INTEGRATED IGNITION CONTROL
IGN	IGNITOR
LS	LIMIT SWITCH
LPS	LOW PRESSURE SWITCH
PLF	FEMALE PLUG/CONNECTOR
PS	PRESSURE SWITCH
RS	ROLLOUT SWITCH
TB1	TERMINAL BLOCK (24V SIGNAL)
TR	TRANSFORMER
VM	VENT MOTOR
VMR	VENT MOTOR RELAY
BC	BLOWER CAPACITOR

NOTES

1. REPLACEMENT WIRE MUST BE THE SAME SIZE AND TYPE OF INSULATION AS ORIGINAL. (USE COPPER CONDUCTOR ONLY).
2. FOR 208 VOLT TRANSFORMER OPERATION MOVE BLACK WIRE FROM TERMINAL 3 TO TERMINAL 2 ON TRANSFORMER.
3. FOR DIFFERENT THAN FACTORY SPEED TAP. CHANGE COOLING SPEED AT COOL TERMINAL. CHANGE HEATING SPEED AT HEAT TERMINAL ON CONTROL BOARD
   3 SPEED MOTOR
   RD - LOW SPEED
   BL - MED. SPEED
   BK - HIGH SPEED
4. ACCESSORY ECONOMIZER PLUG ADJACENT TO BLOWER HOUSING IN RETURN AIR COMPARTMENT. REMOVE MALE PLUG AND ATTACH FEMALE PLUG TO ECONOMIZER ACCESSORY.
5. USE COPPER CONDUCTORS ONLY.
   ++ USE NEC CLASS 2 WIRE.
6. PURPLE WIRE CONNECTS TO TRANSFORMER (PIN 1).
7. SPEED TAP TERMINATIONS SHOWN ON DIAGRAM ARE REPRESENTATIVE, BUT ACTUAL FACTORY SETTING MAY BE DIFFERENT BASED ON HEATING VALUE AND CAPACITY OF UNIT.
8. TO RUN DIFFERENT SPEED FOR HEATING AND COOLING, DISCONNECT GEEEN JUMPER FROM "COOL" TERMINAL AND REPLACE WITH APPROPRIATE SPEED TAP. THEN PLACE DISCONNECTED END OF JUMPER ON "UNUSED" TERMINAL LEFT OPEN BY MOVING THE SPEED TAP.
9. FOR LOW STAGE OPERATION ONLY, REMOVE WHITE JUMPER. FOR 2 STAGE OPERATION, REMOVE JUMPER AND CONNECT W2 TO W1 ON THERMOSTAT.

SEE UNIT RATING PLATE FOR TYPE AND SIZE OF OVERCURRENT PROTECTION.

208-240/3/60 0140L00507 REV B

FACTORY WIRING
- LINE VOLTAGE
- LOW VOLTAGE
- OPTIONAL HIGH VOLTAGE

FIELD WIRING
- HIGH VOLTAGE
- LOW VOLTAGE

WIRE CODE

BK	BLACK
BL	BLUE
BR	BROWN
GR	GREEN
OR	ORANGE
PK	PINK
PU	PURPLE
RD	RED
WH	WHITE
YL	YELLOW
BL/PK	BLUE WITH PINK STRIP
YL/PK	YELLOW WITH PINK STRIP

THERMOSTAT FIELD WIRING ++

NO ECONOMIZER

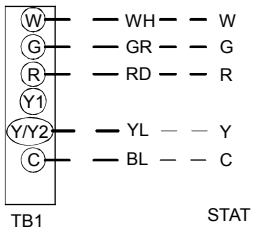

WITH ECONOMIZER OPTION

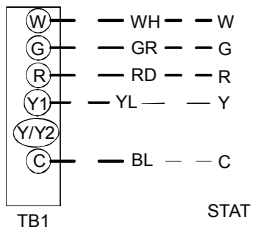

2 STAGE COOLING

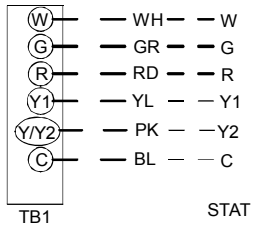

Wiring is subject to change. Always refer to the wiring diagram on the unit for the most up-to-date wiring.

WARNING

HIGH VOLTAGE!
DISCONNECT ALL POWER BEFORE SERVICING OR INSTALLING THIS UNIT. MULTIPLE POWER SOURCES MAY BE PRESENT. FAILURE TO DO SO MAY CAUSE PROPERTY DAMAGE, PERSONAL INJURY OR DEATH.

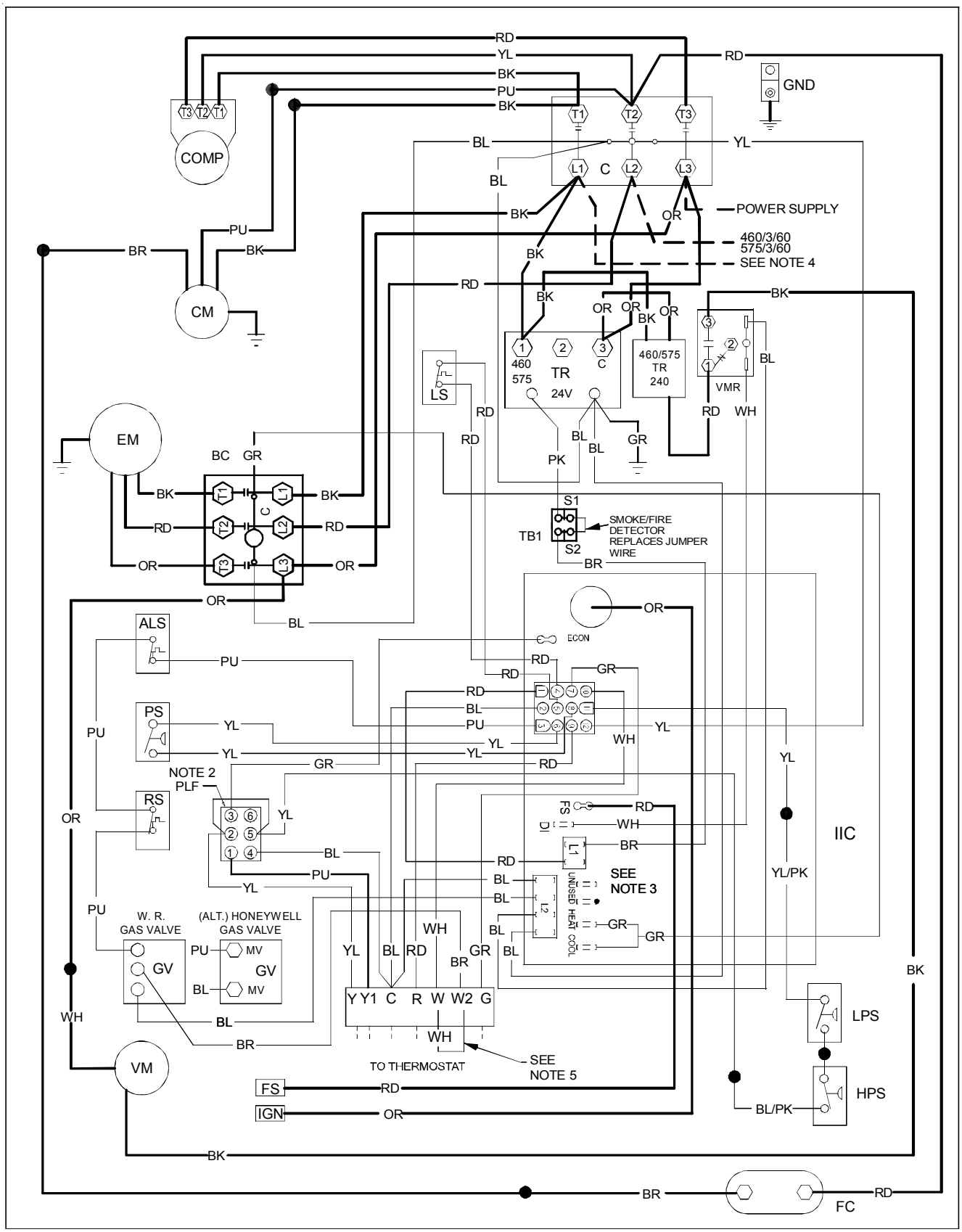

460-575/3/60 0140L00870 REV B

Wiring is subject to change. Always refer to the wiring diagram on the unit for the most up-to-date wiring.

WARNING

HIGH VOLTAGE!
DISCONNECT ALL POWER BEFORE SERVICING OR INSTALLING THIS UNIT. MULTIPLE POWER SOURCES MAY BE PRESENT. FAILURE TO DO SO MAY CAUSE PROPERTY DAMAGE, PERSONAL INJURY OR DEATH.

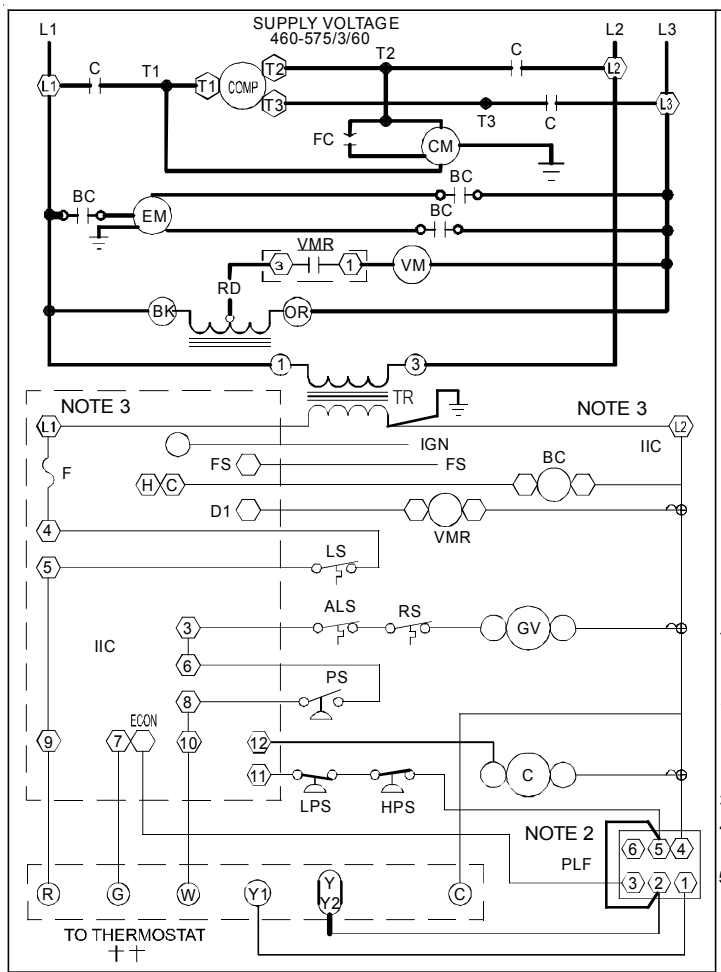

COMPONENT LEGEND

ALS	AUXILIARY LIMIT SWITCH
BC	BLOWER CONTACTOR
COMP	COMPRESSOR
CM	CONDENSER MOTOR
C	CONTACTOR
EM	EVAPORATOR MOTOR
F	FUSE
FC	FAN CAPACITOR
FS	FLAME SENSOR
GND	EQUIPMENT GROUND
GV	GAS VALVE
HPS	HIGH PRESSURE SWITCH
IBR	INDOOR BLOWER RELAY
IIC	INTEGRATED IGNITION CONTROL
IGN	IGNITOR
LPS	LOW PRESSURE SWITCH
LS	LIMIT SWITCH
PLF	FEMALE PLUG/CONNECTOR
PS	PRESSURE SWITCH
RS	ROLLOUT SWITCH
TB1	TERMINAL BLOCK (24V SIGNAL)
TR	TRANSFORMER
VM	VENT MOTOR
VMR	VENT MOTOR RELAY

FACTORY WIRING
- LINE VOLTAGE
- LOW VOLTAGE
- OPTIONAL HIGH VOLTAGE

FIELD WIRING
- HIGH VOLTAGE
- LOW VOLTAGE

WIRE CODE

BK	BLACK
BL	BLUE
BR	BROWN
GR	GREEN
OR	ORANGE
PK	PINK
PU	PURPLE
RD	RED
WH	WHITE
YL	YELLOW
BL/PK	BLUE WITH PINK STRIP
YL/PK	YELLOW WITH PINK STRIP

NOTES

1. REPLACEMENT WIRE MUST BE THE SAME SIZE AND TYPE OF INSULATION AS ORIGINAL. (USE COPPER CONDUCTOR ONLY).
2. ACCESSORY ECONOMIZER PLUG ADJACENT TO BLOWER HOUSING IN RETURN AIR COMPARTMENT. REMOVE MALE PLUG AND ATTACH FEMALE PLUG TO THE ECONOMIZER ACCESSORY.
3. L1 AND L2 ON IIC CONTROL IS 24V INPUT.
4. USE COPPER CONDUCTORS ONLY.
   ++ USE NEC CLASS 2 WIRE.
5. FOR LOW STAGE OPERATION ONLY, REMOVE WHITE JUMPER. FOR 2 STAGE OPERATION, REMOVE JUMPER AND CONNECT W2 TO W2 ON THERMOSTAT.

THERMOSTAT FIELD WIRING ++

NO ECONOMIZER

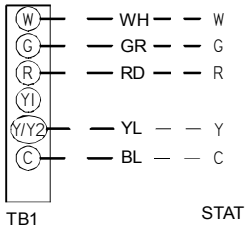

WITH ECONOMIZER OPTION

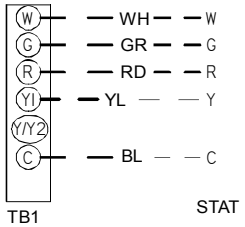

2 STAGE COOLING

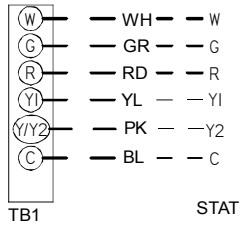

INSTALLER/SERVICEMAN

THE STATUS LIGHT ON THE FURNACE CONTROL MAY BE USED AS A GUIDE TO TROUBLESHOOTING THIS APPLIANCE. STATUS LIGHT CODES ARE AS FOLLOWS:

STATUS LIGHT	EQUIP. STATUS	CHECK
ON	NORMAL OPERATION	-
OFF	NO POWER OR INTERNAL CONTROL	CHECK INPUT POWER CHECK FUSE ON CONTROL REPLACE CONTROL
1 BLINK	IGNITION FAILURE OPEN ROLLOUT SWITCH OPEN AUX. LIMIT SWITCH	GAS FLOW GAS PRESSURE GAS VALVE FLAME SENSOR FLAME ROLLOUT BAD SWITCH AUX. LIMIT OPEN
2 BLINKS	PRESSURE SWITCH OPEN	CHECK PRESSURE SWITCH
3 BLINKS	PRESSURE SWITCH CLOSED WITHOUT INDUCER ON	CHECK PRESSURE SWITCH
4 BLINKS	OPEN LIMIT SWITCH	MAIN LIMIT OPEN BAD SWITCH
5 BLINKS	FALSE FLAME SENSED	STICKING GAS VALVE
6 BLINKS	COMPRESSOR OUTPUT DELAY	3 MIN. COMP. ANTI-CYCLE TIMER

SEE UNIT RATING PLATE FOR TYPE AND SIZE OF OVER CURRENT PROTECTION.

460-575/3/60 0140L00870 REV B

Wiring is subject to change. Always refer to the wiring diagram on the unit for the most up-to-date wiring.

CPG036(048)0903B/CPG060*3B/CPG072*3B THREE PHASE 208-230V/60HZ **BELT DRIVE**

WARNING

HIGH VOLTAGE!
DISCONNECT ALL POWER BEFORE SERVICING OR INSTALLING THIS UNIT. MULTIPLE POWER SOURCES MAY BE PRESENT. FAILURE TO DO SO MAY CAUSE PROPERTY DAMAGE, PERSONAL INJURY OR DEATH.

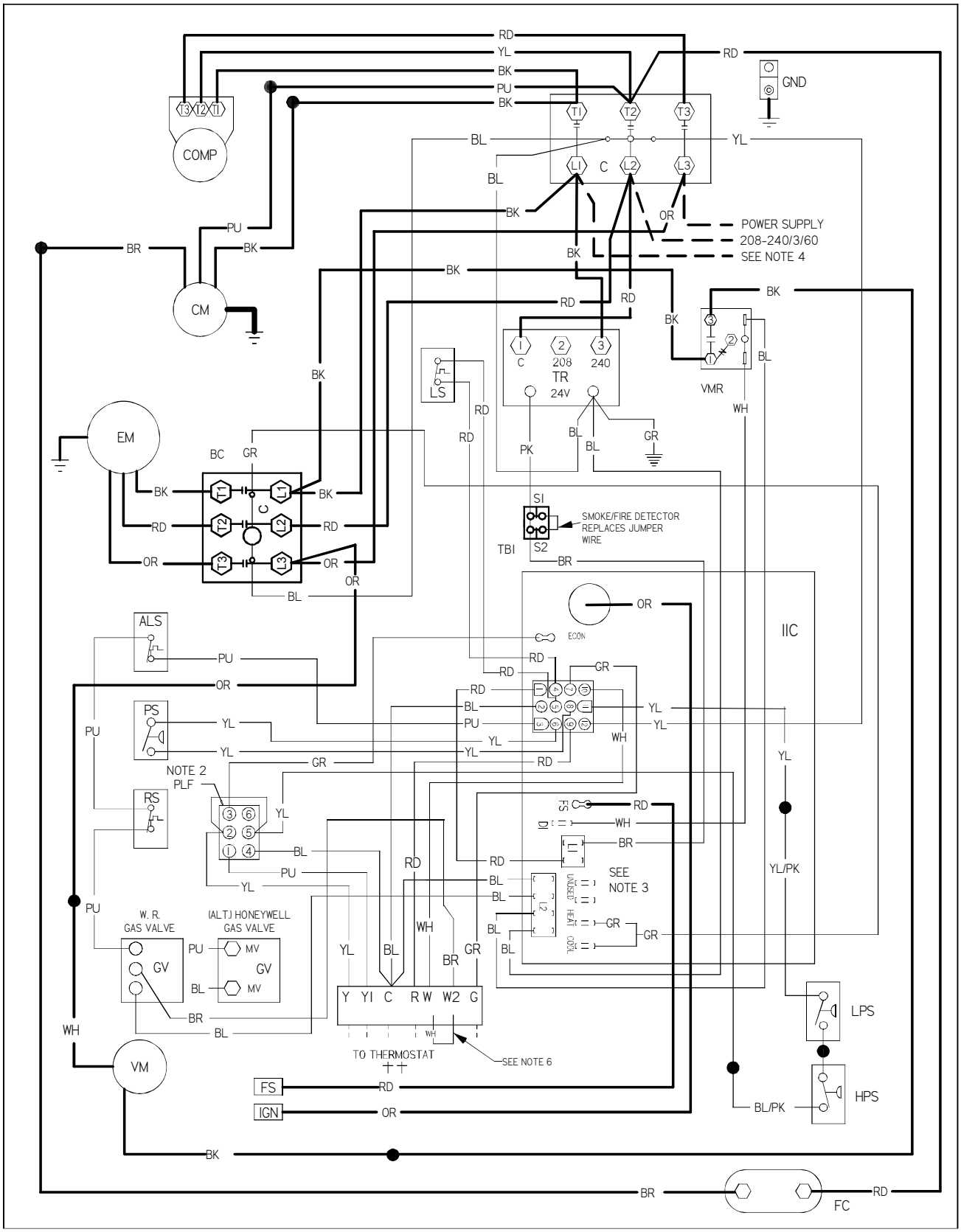

208-240/3/60 0140L0098I REV B

Wiring is subject to change. Always refer to the wiring diagram on the unit for the most up-to-date wiring.

CPG036(048)0903B/CPG060*3B/CPG072*3B THREE PHASE 208-230V/60HZ **BELT DRIVE**

WARNING

HIGH VOLTAGE!
DISCONNECT ALL POWER BEFORE SERVICING OR INSTALLING THIS UNIT. MULTIPLE POWER SOURCES MAY BE PRESENT. FAILURE TO DO SO MAY CAUSE PROPERTY DAMAGE, PERSONAL INJURY OR DEATH.

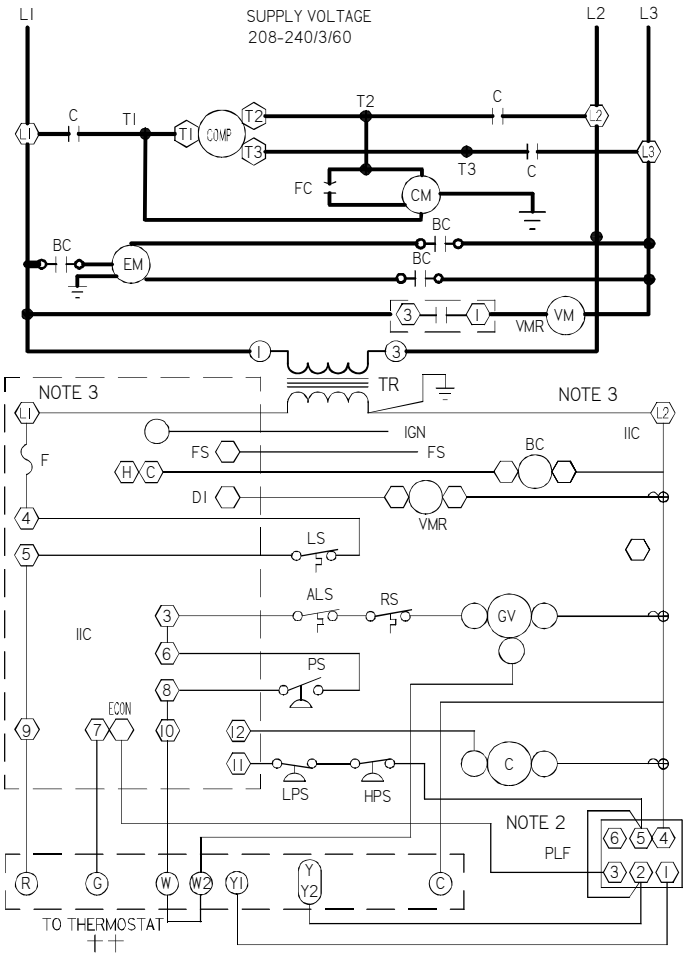

COMPONENT LEGEND

ALS	AUXILIARY LIMIT SWITCH
BC	BLOWER CONTACTOR
COMP	COMPRESSOR
CM	CONDENSER MOTOR
C	CONTACTOR
EM	EVAPORATOR MOTOR
F	FUSE
FC	FAN CAPACITOR
FS	FLAME SENSOR
GND	EQUIPMENT GROUND
GV	GAS VALVE
HPS	HIGH PRESSURE SWITCH
IBR	INDOOR BLOWER RELAY
IIC	INTEGRATED IGNITION CONTROL
IGN	IGNITOR
LPS	LOW PRESSURE SWITCH
LS	LIMIT SWITCH
PLF	FEMALE PLUG/CONNECTOR
PS	PRESSURE SWITCH
RS	ROLLOUT SWITCH
TBI	TERMINAL BLOCK (24V SIGNAL)
TR	TRANSFORMER
VM	VENT MOTOR
VMR	VENT MOTOR RELAY

FACTORY WIRING
- LINE VOLTAGE
- LOW VOLTAGE
- OPTIONAL HIGH VOLTAGE

FIELD WIRING
- HIGH VOLTAGE
- LOW VOLTAGE

WIRE CODE

BK	BLACK
BL	BLUE
BR	BROWN
GR	GREEN
OR	ORANGE
PK	PINK
PU	PURPLE
RD	RED
WH	WHITE
YL	YELLOW
BL/PK	BLUE WITH PINK STRIP
YL/PK	YELLOW WITH PINK STRIP

NOTES

1. REPLACEMENT WIRE MUST BE THE SAME SIZE AND TYPE OF INSULATION AS ORIGINAL. (USE COPPER CONDUCTOR ONLY).
2. ACCESSORY ECONOMIZER PLUG ADJACENT TO BLOWER HOUSING IN RETURN AIR COMPARTMENT. REMOVE MALE PLUG AND ATTACH FEMALE PLUG TO THE ECONOMIZER ACCESSORY.
3. L1 AND L2 ON IIC CONTROL IS 24V INPUT.
4. **USE COPPER CONDUCTORS ONLY.**
   ++ USE NEC CLASS 2 WIRE.
5. FOR 208 VOLT TRANSFORMER OPERATION, MOVE BLACK WIRE FROM TERMINAL 3 TO TERMINAL 2 ON TRANSFORMER.
6. FOR LOW STAGE OPERATION ONLY, REMOVE WHITE JUMPER. FOR 2 STAGE OPERATION, REMOVE JUMPER AND CONNECT W2 TO W2 ON THERMOSTAT.

SEE UNIT RATING PLATE FOR TYPE AND SIZE OF OVER CURRENT PROTECTION

208-240/3/60 0140L00981 REV B

THERMOSTAT FIELD WIRING ++

NO ECONOMIZER

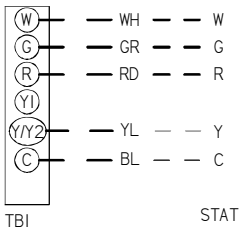

WITH ECONOMIZER OPTION

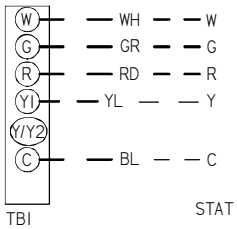

2 STAGE COOLING

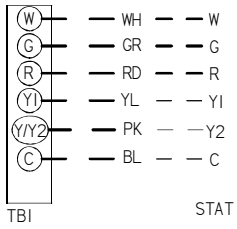

INSTALLER/SERVICEMAN

THE STATUS LIGHT ON THE FURNACE CONTROL MAY BE USED AS A GUIDE TO TROUBLESHOOTING THIS APPLIANCE. STATUS LIGHT CODES ARE AS FOLLOWS:

STATUS LIGHT	EQUIP. STATUS	CHECK
ON	NORMAL OPERATION	-
OFF	NO POWER OR INTERNAL CONTROL	CHECK INPUT POWER CHECK FUSE ON CONTROL REPLACE CONTROL
1 BLINK	IGNITION FAILURE OPEN ROLLOUT SWITCH OPEN AUX. LIMIT SWITCH	GAS FLOW GAS PRESSURE GAS VALVE FLAME SENSOR FLAME ROLLOUT BAD SWITCH AUX. LIMIT OPEN
2 BLINKS	PRESSURE SWITCH OPEN	CHECK PRESSURE SWITCH
3 BLINKS	PRESSURE SWITCH CLOSED WITHOUT INDUCER ON	CHECK PRESSURE SWITCH
4 BLINKS	OPEN LIMIT SWITCH	MAIN LIMIT OPEN BAD SWITCH
5 BLINKS	FALSE FLAME SENSED	STICKING GAS VALVE
6 BLINKS	COMPRESSOR OUTPUT DELAY	3 MIN. COMP. ANTI-CYCLE TIMER

Wiring is subject to change. Always refer to the wiring diagram on the unit for the most up-to-date wiring.

CPG036(048)0454B THREE PHASE 575V/60HZ **BELT DRIVE**

WARNING

HIGH VOLTAGE!
DISCONNECT ALL POWER BEFORE SERVICING OR INSTALLING THIS UNIT. MULTIPLE POWER SOURCES MAY BE PRESENT. FAILURE TO DO SO MAY CAUSE PROPERTY DAMAGE, PERSONAL INJURY OR DEATH.

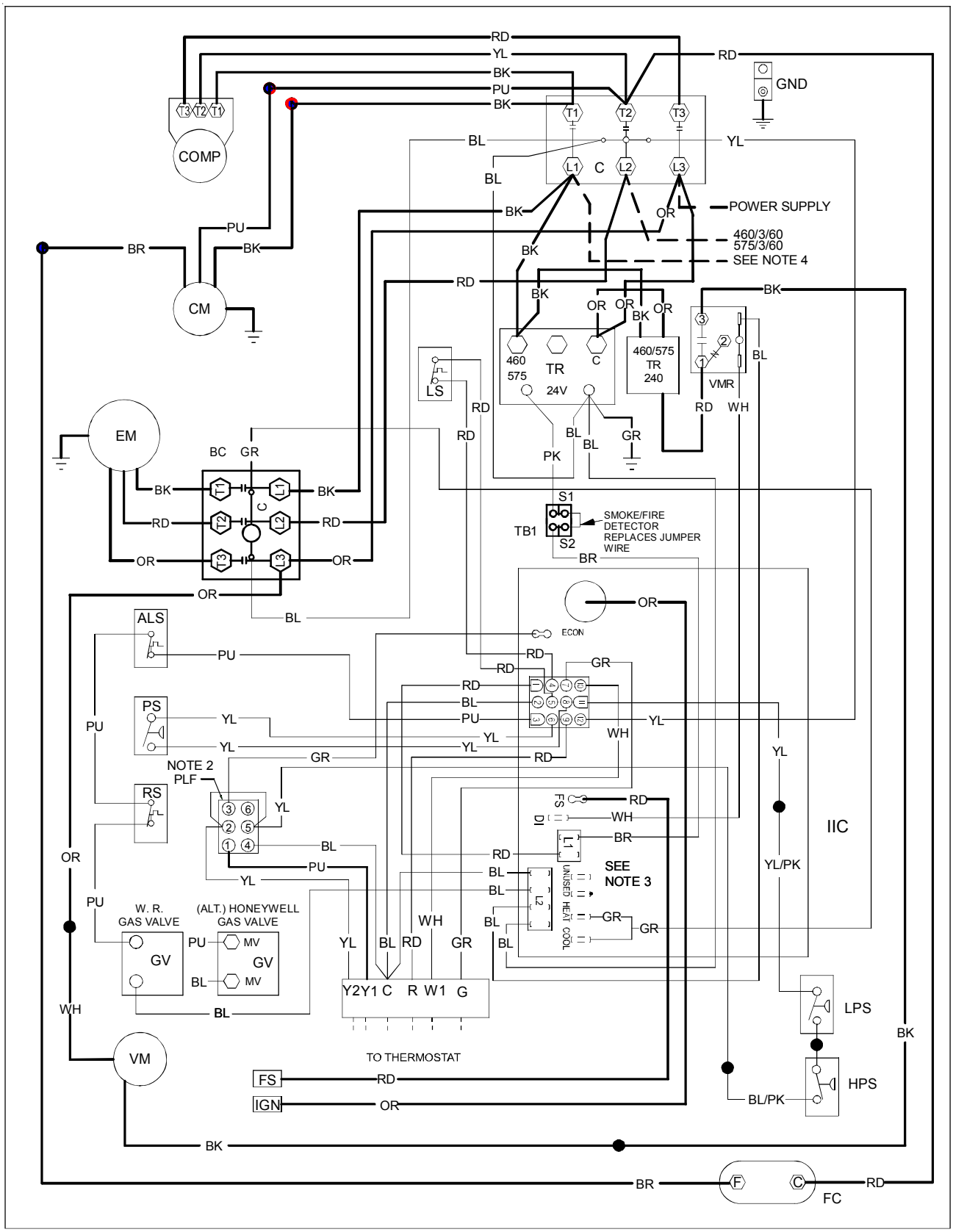

460-575/3/60 0140L00871 REV B

Wiring is subject to change. Always refer to the wiring diagram on the unit for the most up-to-date wiring.

CPG036(048)0454B THREE PHASE 575V/60HZ **BELT DRIVE**

WARNING

HIGH VOLTAGE!
DISCONNECT ALL POWER BEFORE SERVICING OR INSTALLING THIS UNIT. MULTIPLE POWER SOURCES MAY BE PRESENT. FAILURE TO DO SO MAY CAUSE PROPERTY DAMAGE, PERSONAL INJURY OR DEATH.

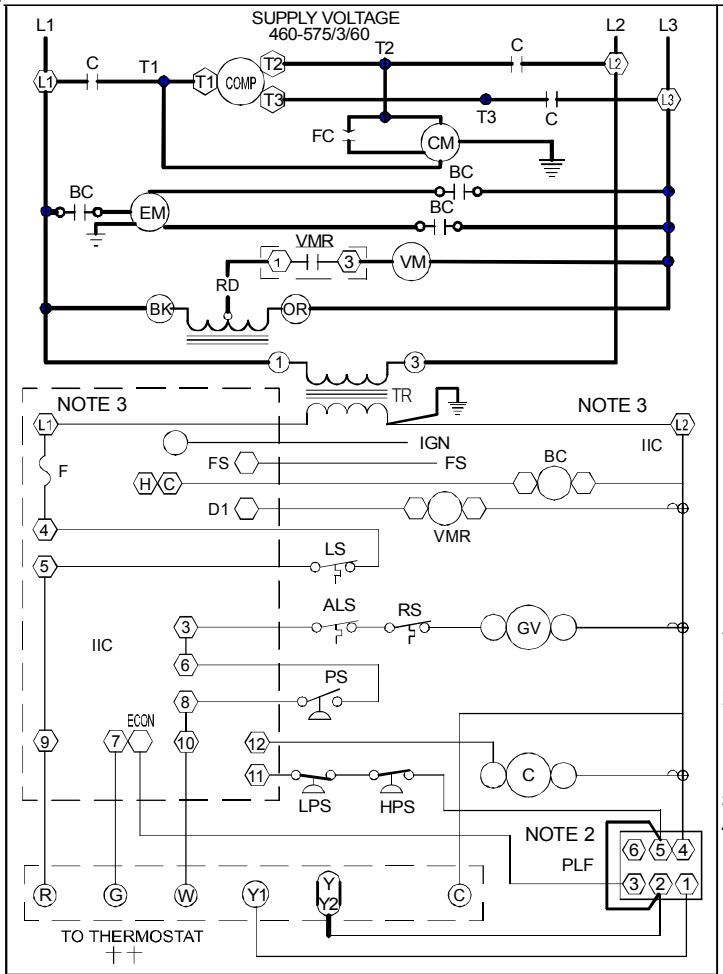

COMPONENT LEGEND

ALS	AUXILIARY LIMIT SWITCH
BC	BLOWER CONTACTOR
COMP	COMPRESSOR
CM	CONDENSER MOTOR
C	CONTACTOR
EM	EVAPORATOR MOTOR
F	FUSE
FC	FAN CAPACITOR
FS	FLAME SENSOR
GND	EQUIPMENT GROUND
GV	GAS VALVE
HPS	HIGH PRESSURE SWITCH
IBR	INDOOR BLOWER RELAY
IIC	INTEGRATED IGNITION CONTROL
IGN	IGNITOR
LPS	LOW PRESSURE SWITCH
LS	LIMIT SWITCH
PLF	FEMALE PLUG/CONNECTOR
PS	PRESSURE SWITCH
RS	ROLLOUT SWITCH
TB1	TERMINAL BLOCK (24V SIGNAL)
TR	TRANSFORMER
VM	VENT MOTOR
VMR	VENT MOTOR RELAY

FACTORY WIRING
- LINE VOLTAGE
- LOW VOLTAGE
- OPTIONAL HIGH VOLTAGE

FIELD WIRING
- HIGH VOLTAGE
- LOW VOLTAGE

WIRE CODE

BK	BLACK
BL	BLUE
BR	BROWN
GR	GREEN
OR	ORANGE
PK	PINK
PU	PURPLE
RD	RED
WH	WHITE
YL	YELLOW
BL/PK	BLUE WITH PINK STRIP
YL/PK	YELLOW WITH PINK STRIP

NOTES

1. REPLACEMENT WIRE MUST BE THE SAME SIZE AND TYPE OF INSULATION AS ORIGINAL. (USE COPPER CONDUCTOR ONLY).
2. ACCESSORY ECONOMIZER PLUG ADJACENT TO BLOWER HOUSING IN RETURN AIR COMPARTMENT. REMOVE MALE PLUG AND ATTACH FEMALE PLUG TO THE ECONOMIZER ACCESSORY.
3. L1 AND L2 ON IIC CONTROL IS 24V INPUT.
4. USE COPPER CONDUCTORS ONLY.
   ++ USE NEC CLASS 2 WIRE.

THERMOSTAT FIELD WIRING ++

NO ECONOMIZER

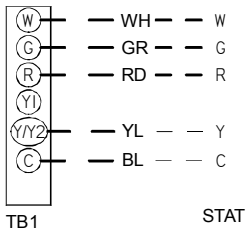

WITH ECONOMIZER OPTION

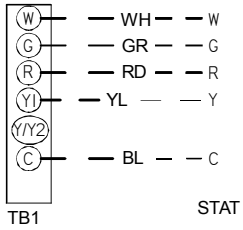

2 STAGE COOLING

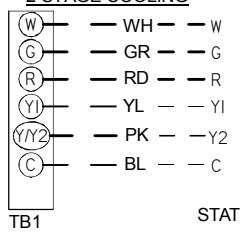

INSTALLER/SERVICEMAN

THE STATUS LIGHT ON THE FURNACE CONTROL MAY BE USED AS A GUIDE TO TROUBLESHOOTING THIS APPLIANCE. STATUS LIGHT CODES ARE AS FOLLOWS:

STATUS LIGHT	EQUIP. STATUS	CHECK
ON	NORMAL OPERATION	-
OFF	NO POWER OR INTERNAL CONTROL	CHECK INPUT POWER CHECK FUSE ON CONTROL REPLACE CONTROL
1 BLINK	IGNITION FAILURE OPEN ROLLOUT SWITCH OPEN AUX. LIMIT SWITCH	GAS FLOW GAS PRESSURE GAS VALVE FLAME SENSOR FLAME ROLLOUT BAD SWITCH AUX. LIMIT OPEN
2 BLINKS	PRESSURE SWITCH OPEN	CHECK PRESSURE SWITCH
3 BLINKS	PRESSURE SWITCH CLOSED WITHOUT INDUCER ON	CHECK PRESSURE SWITCH
4 BLINKS	OPEN LIMIT SWITCH	MAIN LIMIT OPEN BAD SWITCH
5 BLINKS	FALSE FLAME SENSED	STICKING GAS VALVE
6 BLINKS	COMPRESSOR OUTPUT DELAY	3 MIN. COMP. ANTI-CYCLE TIMER

SEE UNIT RATING PLATE FOR TYPE AND SIZE OF OVER CURRENT PROTECTION.

460-575/3/60 0140L00871 REV B

Wiring is subject to change. Always refer to the wiring diagram on the unit for the most up-to-date wiring.

CPG036(048)0453B THREE PHASE 240V/60HZ **BELT DRIVE**

WARNING

HIGH VOLTAGE!
DISCONNECT ALL POWER BEFORE SERVICING OR INSTALLING THIS UNIT. MULTIPLE POWER SOURCES MAY BE PRESENT. FAILURE TO DO SO MAY CAUSE PROPERTY DAMAGE, PERSONAL INJURY OR DEATH.

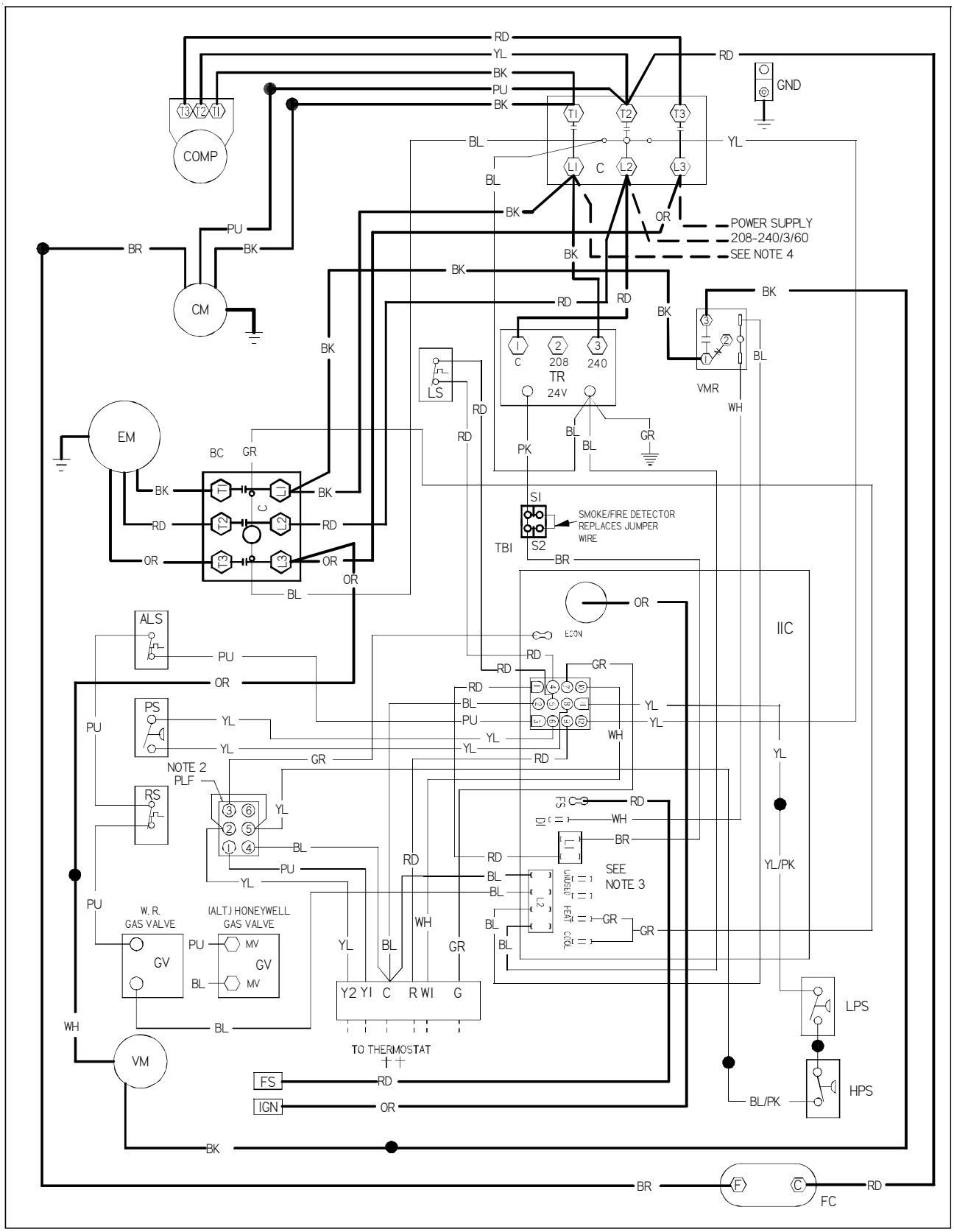

208-240/3/60 0140L00979 REV B

Wiring is subject to change. Always refer to the wiring diagram on the unit for the most up-to-date wiring.

CPG036(048)0453B THREE PHASE 240V/60HZ **BELT DRIVE**

WARNING

HIGH VOLTAGE!
DISCONNECT ALL POWER BEFORE SERVICING OR INSTALLING THIS UNIT. MULTIPLE POWER SOURCES MAY BE PRESENT. FAILURE TO DO SO MAY CAUSE PROPERTY DAMAGE, PERSONAL INJURY OR DEATH.

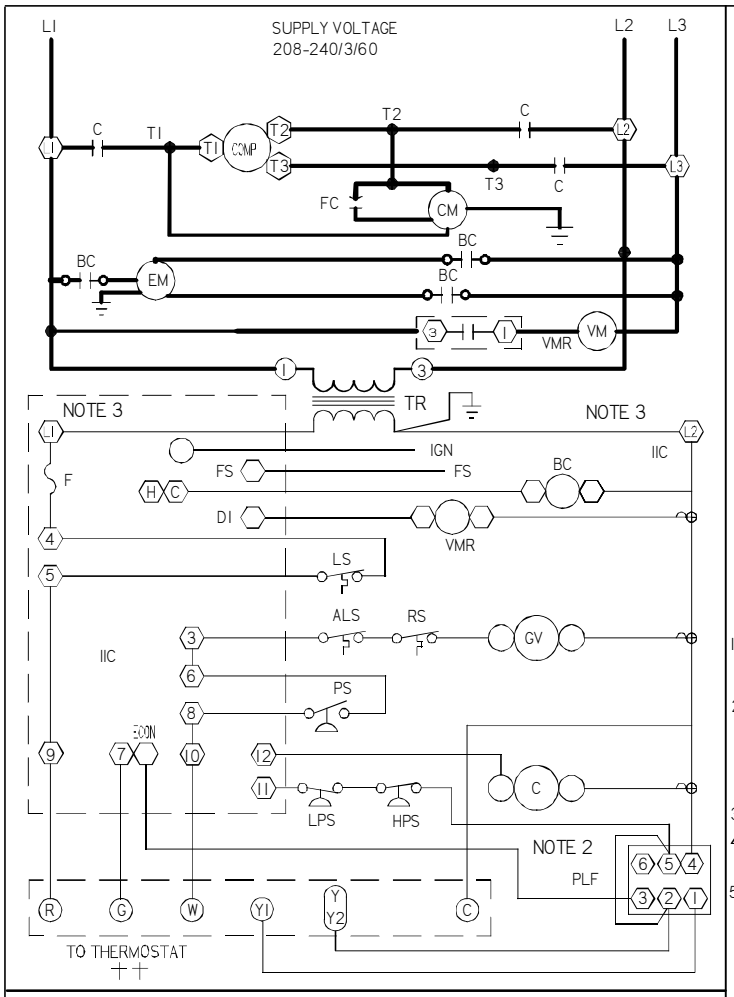

COMPONENT LEGEND

ALS	AUXILIARY LIMIT SWITCH
BC	BLOWER CONTACTOR
COMP	COMPRESSOR
CM	CONDENSER MOTOR
C	CONTACTOR
EM	EVAPORATOR MOTOR
F	FUSE
FC	FAN CAPACITOR
FS	FLAME SENSOR
GND	EQUIPMENT GROUND
GV	GAS VALVE
HPS	HIGH PRESSURE SWITCH
IBR	INDOOR BLOWER RELAY
IIC	INTEGRATED IGNITION CONTROL
IGN	IGNITOR
LPS	LOW PRESSURE SWITCH
LS	LIMIT SWITCH
PLF	FEMALE PLUG/CONNECTOR
PS	PRESSURE SWITCH
RS	ROLLOUT SWITCH
TBI	TERMINAL BLOCK (24V SIGNAL)
TR	TRANSFORMER
VM	VENT MOTOR
VMR	VENT MOTOR RELAY

NOTES

1. REPLACEMENT WIRE MUST BE THE SAME SIZE AND TYPE OF INSULATION AS ORIGINAL. (USE COPPER CONDUCTOR ONLY).
2. ACCESSORY ECONOMIZER PLUG ADJACENT TO BLOWER HOUSING IN RETURN AIR COMPARTMENT. REMOVE MALE PLUG AND ATTACH FEMALE PLUG TO THE ECONOMIZER ACCESSORY.
3. L1 AND L2 ON IIC CONTROL IS 24V INPUT.
4. **USE COPPER CONDUCTORS ONLY.**
   ++ USE NEC CLASS 2 WIRE.
5. FOR 208 VOLT TRANSFORMER OPERATION, MOVE BLACK WIRE FROM TERMINAL (3) TO TERMINAL (2) ON TRANSFORMER.

SEE UNIT RATING PLATE FOR TYPE AND SIZE OF OVER CURRENT PROTECTION

208-240/3/60 0140L00979 REV B

FACTORY WIRING
- LINE VOLTAGE
- LOW VOLTAGE
- OPTIONAL HIGH VOLTAGE

FIELD WIRING
- HIGH VOLTAGE
- LOW VOLTAGE

WIRE CODE

BK	BLACK
BL	BLUE
BR	BROWN
GR	GREEN
OR	ORANGE
PK	PINK
PU	PURPLE
RD	RED
WH	WHITE
YL	YELLOW
BL/PK	BLUE WITH PINK STRIP
YL/PK	YELLOW WITH PINK STRIP

THERMOSTAT FIELD WIRING ++

NO ECONOMIZER

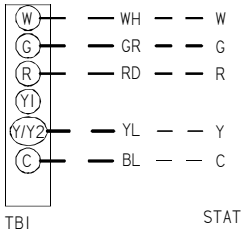

WITH ECONOMIZER OPTION

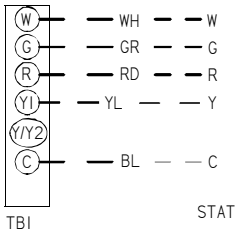

2 STAGE COOLING

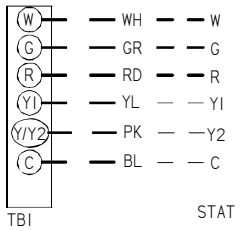

INSTALLER/SERVICEMAN

THE STATUS LIGHT ON THE FURNACE CONTROL MAY BE USED AS A GUIDE TO TROUBLESHOOTING THIS APPLIANCE. STATUS LIGHT CODES ARE AS FOLLOWS:

STATUS LIGHT	EQUIP. STATUS	CHECK
ON	NORMAL OPERATION	-
OFF	NO POWER OR INTERNAL CONTROL	CHECK INPUT POWER CHECK FUSE ON CONTROL REPLACE CONTROL
1 BLINK	IGNITION FAILURE OPEN ROLLOUT SWITCH OPEN AUX. LIMIT SWITCH	GAS FLOW GAS PRESSURE GAS VALVE FLAME SENSOR FLAME ROLLOUT BAD SWITCH AUX. LIMIT OPEN
2 BLINKS	PRESSURE SWITCH OPEN	CHECK PRESSURE SWITCH
3 BLINKS	PRESSURE SWITCH CLOSED WITHOUT INDUCER ON	CHECK PRESSURE SWITCH
4 BLINKS	OPEN LIMIT SWITCH	MAIN LIMIT OPEN BAD SWITCH
5 BLINKS	FALSE FLAME SENSED	STICKING GAS VALVE
6 BLINKS	COMPRESSOR OUTPUT DELAY	3 MIN. COMP. ANTI-CYCLE TIMER

Wiring is subject to change. Always refer to the wiring diagram on the unit for the most up-to-date wiring.

THIS PAGE LEFT BLANK INTENTIONALLY.

Visit our websites at **www.goodmanmfg.com** or **amana-hac.com** for information on:

- Products
- Parts
- Warranties
- Contractor Programs and Training
- Customer Services
- Financing Options

© 2009-2012 Goodman Manufacturing Company, L.P.