A.O. SMITH

WATER PRODUCTS COMPANY

GAS

RESIDENTIAL WATER HEATER PARTS LIST

MODELS: GVR/XVR-30, 40, 50
PROMAX WITH
HIGH EFFICIENCY

ProMax

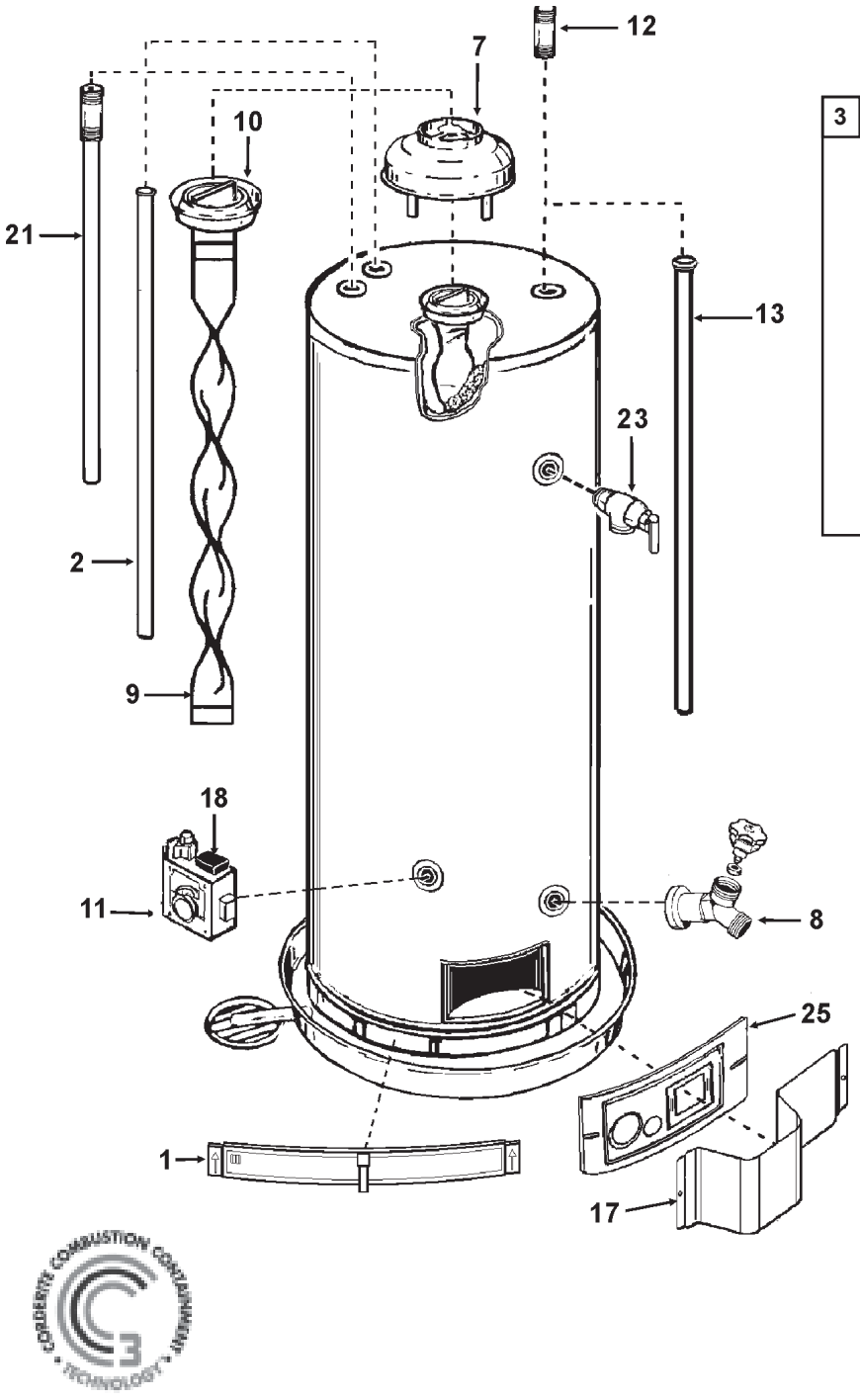

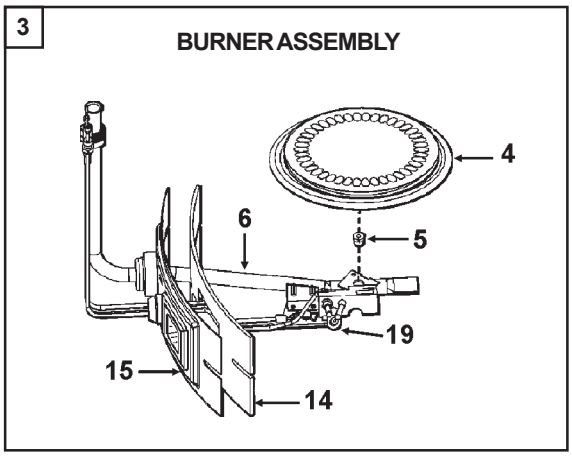

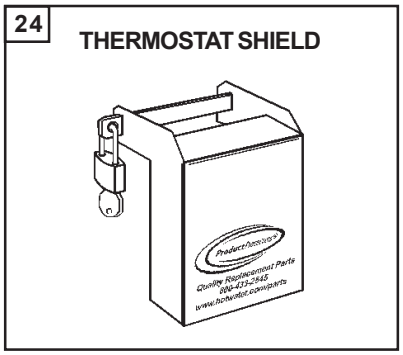

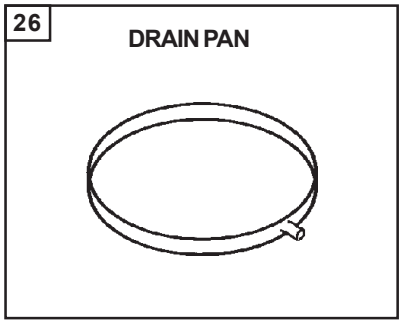

A.O. SMITH WATER PRODUCTS CO., INC.
5621 W. 115TH STREET • ALSIP, ILLINOIS 60803
Phone: 1-800-433-2545 • Fax: 1-800-433-2515
www.hotwater.com • e-mail: parts@hotwater.com

PRINTED IN U.S.A. 1104

PART NO. 185076-000

Item	Description	GVR/XVR-30	GVR/XVR-40	GVR/XVR-50
1	Air Intake Screen	183159-000	183159-000	183159-000
2	Anode Rod - GVR Only	183523-023	183523-026	183523-029
2	Anode Rod - XVR Only	183523-029	183523-033	183523-036
3	Burner Assembly - Natural Gas	183222-016	183222-020	183222-022
3	Burner Assembly - Propane Gas	183222-017	183222-021	183222-023
4	Burner Head with Door Insulation - Natural Gas	183504-000	183504-000	183504-000
4	Burner Head with Door Insulation - Propane Gas	182730-000	182730-000	182730-000
5	Burner Orifice with Door Insulation - Natural Gas	181508-033	181508-033	181508-033
5	Burner Orifice with Door Insulation - Propane Gas	181791-050	181791-050	181791-050
6	Burner Tube with Rubber Boot and Door Insulation - Natural Gas	183163-001	183163-002	183163-004
6	Burner Tube with Rubber Boot and Door Insulation - Propane Gas	183450-001	183450-002	183450-004
7	Draft Hood	183852-000	183852-000	183852-000
8	Drain Valve - Brass	026273-007	026273-007	026273-007
9	Flue Baffle Assembly	180666-000	180666-000	180666-000
10	Flue Restrictor	034894-000	034894-000	034894-000
11	Gas Control Valve - Natural Gas	182791-005	182791-005	182791-005
11	Gas Control Valve - Propane Gas	182792-001	182792-001	182792-001
12	Heat Trap Assembly	184792-003	184792-003	184792-003
13	Inlet Tube Assembly	183776-033	183776-033	183776-036
14	Inner Door Gasket	183162-000	183162-000	183162-000
15	Inner Door with Door Insulation	183425-002	183425-001	183425-000
16*	Instruction Manual	184165-002	184165-002	184165-002
17	Outer Door	183458-000	183458-000	183458-000
18	Piezo Igniter Assembly	183798-000	183798-000	183798-000
19	Pilot Assembly with Grommet and Door Insulation - Natural Gas	183824-200	183824-190	183824-180
19	Pilot Assembly with Grommet and Door Insulation - Propane Gas	183824-192	183824-182	183824-182
20*	Pipe Insulation	181639-003	181639-003	181639-003
21.	Secondary Anode with Heat Trap (optional) GVR Only	184634-133	184634-136	184634-142
21.	Secondary Anode with Heat Trap (optional) XVR Only	184634-114	184634-114	184634-114
22*	Temperature-Pressure Relief Valve Insulation	183256-000	183256-000	183256-000
23	Temperature-Pressure Relief Valve	043151-000	043151-000	043151-000
24	Thermostat Shield (optional)	191259-001	191259-001	191259-001
25	Viewport Assembly	184470-000	184470-000	184470-000
26	20" Dia. Aluminum Drain Pan with Side Drain (optional)	23912-A	23912-A	23912-A
26	22" Dia. Aluminum Drain Pan with Side Drain (optional)	23913-A	23913-A	23913-A
26	28" Dia. Aluminum Drain Pan with Side Drain (optional)	23914-A	23914-A	23914-A

* Not Illustrated.

PROMAX

A.O.SMITH
WATER PRODUCTS COMPANY

5621 W. 115TH STREET • ALSIP, ILLINOIS 60803
Phone: 1-800-433-2545 • Fax: 1-800-433-2515
Website: www.hotwater.com • e-mail: parts@hotwater.com