Model T-3000/3001/3002

Gas Ball Valve

LEGEND VALVE

NO.	PART	MATERIAL
1	HANDLE	ALUMINUM
2	STEM	FORGED BRASS
3	FIXING RING	PHOSPHOR BRONZE
4	O-RING	NITRILE RUBBER
5	SEAL	FIBER
6	SEATS	NITRILE RUBBER
7	BALL	CHROME PLATED BRASS
8	BODY	FORGED BRASS
9	WASHER	BRASS
10	HANDLE SCREW	STEEL

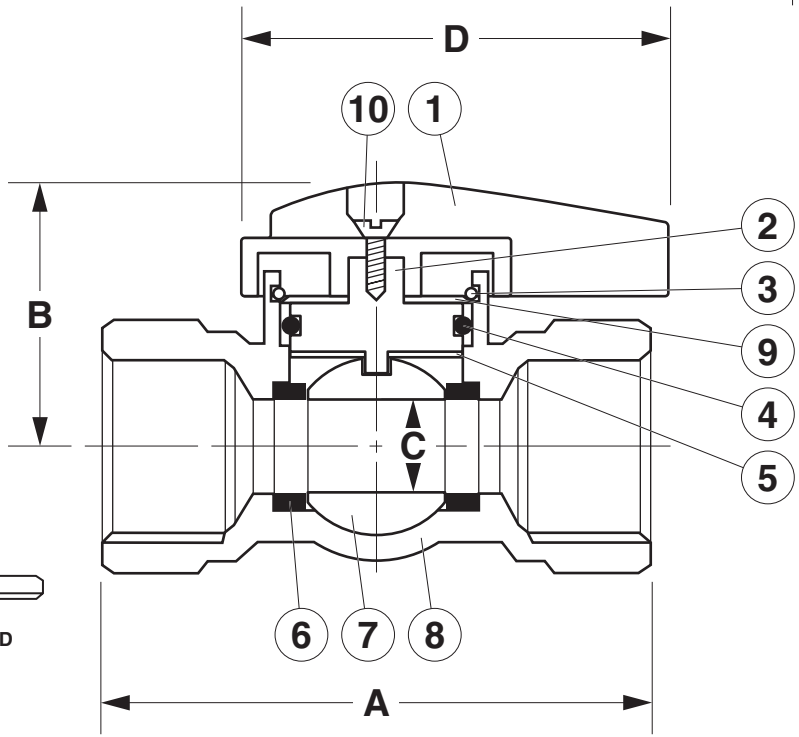

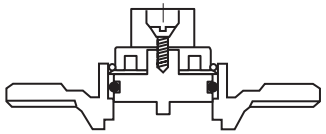

T-3002 HAS SQUARE HEAD

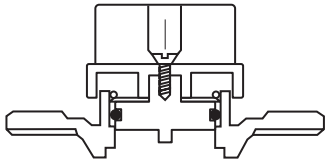

T-3001 HAS T-HANDLE

SIZE	3/8"	1/2"	3/4"	2"		
A	1.96	2.32	2.48	4.33		
B	1.33	1.31	1.50	3.44		
C	.394	.394	.394	1.92		
D	1.41	1.41	2.00	2.49		

- NOTES:
- 175 W.O.G. NON-SHOCK
- ANSI STANDARD Z21.15 FOR USE AS A GAS APPLIANCE CONNECTOR VALVE (1/2 LB. SYSTEM)
- AGA 3-88 FOR USE IN HOUSE PIPING SYSTEMS (2LB. OR 5LB. SYSTEMS)
- INTENDED FOR OPERATION AT AMBIENT TEMPERATURES OF 32˚F TO 125˚F