FITTING INSTRUCTIONS

STRAINER WASTE ASSEMBLY

STW * 90070

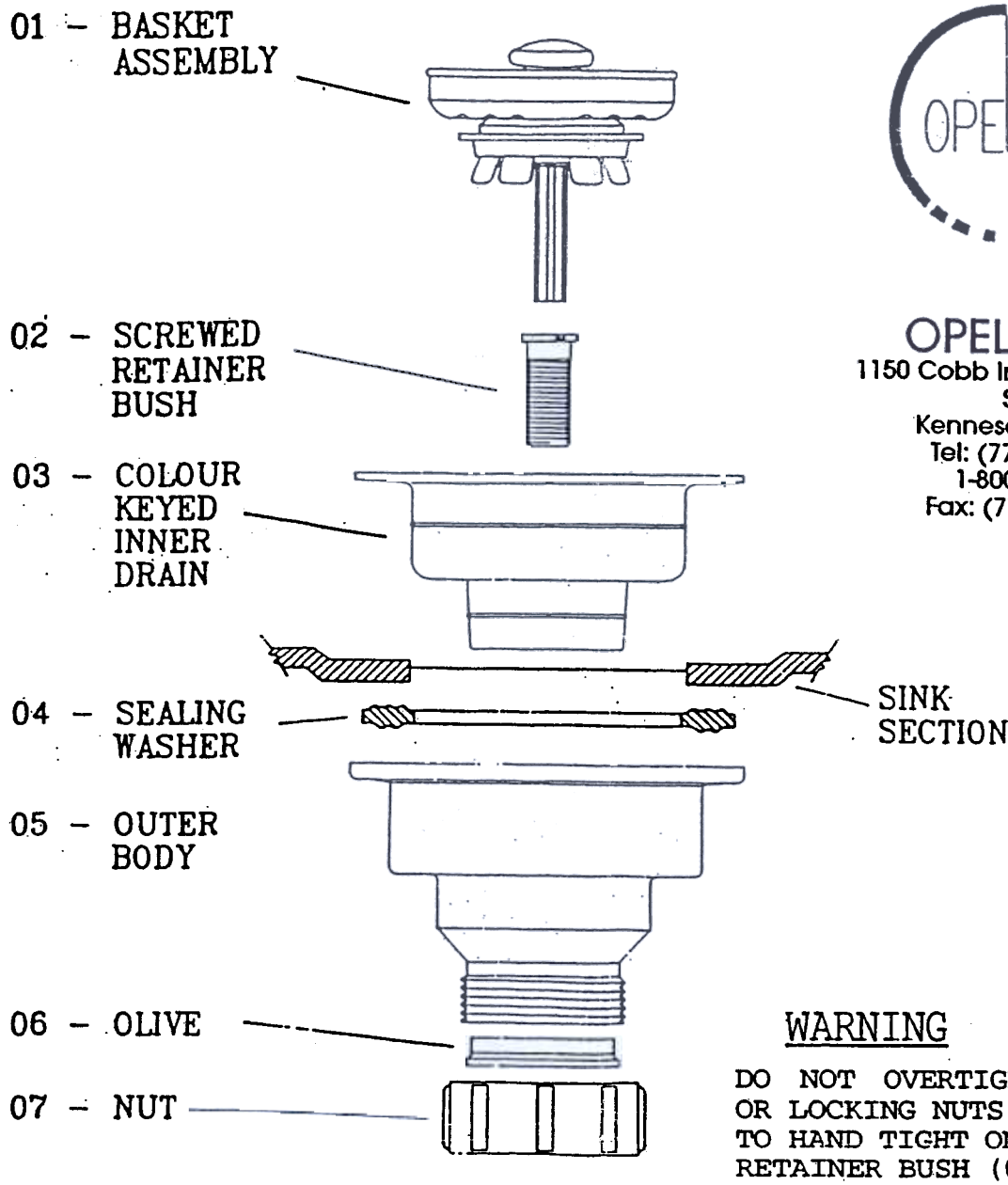

OPELLA, [redacted].
1150 Cobb International Place
Suite E
Kennesaw, GA 30152
Tel: (770) 955-5155
1-800-969-0339
Fax: (770) 955-5955

WARNING

DO NOT OVERTIGHTEN SCREWS OR LOCKING NUTS; NUT (07) - TO HAND TIGHT ONLY, SCREWED RETAINER BUSH (02)-USE COIN OR HAND TIGHT PLUS 1/8 OF A TURN. DO NOT USE OIL BASE SEALER - IT MAY CAUSE DRAIN TO CRACK OR DISTORT. USE CLEAR SILICONE SEALER ONLY.

PARTS LIST

01 BASKET ASSEMBLY
02 SCREWED RETAINER BUSH
03 COLOUR KEYED INNER DRAIN
04 SEALING WASHER
05 OUTER BODY
06 OLIVE
07 NUT