SMITH® JAY R. SMITH MFG. CO.
DIVISION OF SMITH INDUSTRIES, INC.
POST OFFICE BOX 3237
MONTGOMERY, ALABAMA 36109-0237 (USA)
TEL: 334-277-8520 FAX: 334-272-7396 www.jrsmith.com
CUSTOMER DRIVEN

MEMBER OF:

LOCATION

ADJUS-TO-WALL TYPE NO. 1 NIPPLE AND COUPLING OUTLET CONNECTION USED WITH 0100, 0200, 0300 AND 0400 SERIES SUPPORTS FOR WALL HUNG CLOSETS

Smith furnishes the "Adjus-to-Wall" design outlet connection for wall hung bowl installations. Adjus-to-wall consists of a nipple and coupling arrangement whose length is specified by "C" dimension.

"C" dimension is the measurement from the front of face plate to the finished wall. Smith has available a selection of nipple lengths which are used with the Adjus-to-Wall coupling to get the "C" dimension required. This coupling, when used with a given size nipple allows 1 1/2"(38) adjustment [3/4"(19) in and out] to compensate for finished wall line variations.

Smith supports are regularly furnished with a 3 1/4"(83) long nipple which permits "C" dim. from 3"(76) min. to 4 1/2"(115) max. Longer or shorter nipple lengths from chart shown below.

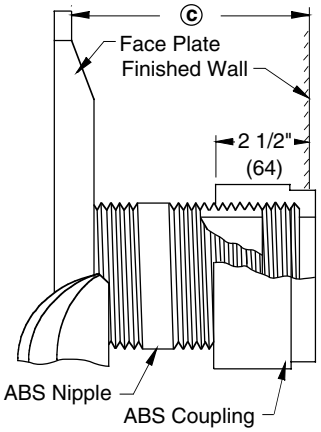

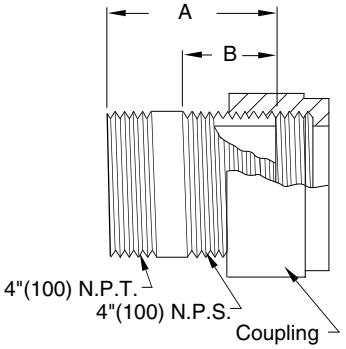

NIPPLE LENGTHS AVAILABLE

A	MIN ⓒ	MAX
2 1/2(64)	2 3/4(70)	3 3/4(95)
3 1/4(83)	3(76)	4 1/2(115)
4 1/2(115)	4 1/4(110)	5 3/4(145)
5 1/4(135)	5(125)	6 1/2(165
6 1/4(160)	6(150)	7 1/2(190)
7(180)	6 3/4(170)	8 1/4(210)
8 1/4(210	8(205)	9 1/2(240)
10(255)	9 3/4(250)	11 1/4(285)
12(305)	11 3/4(300)	13 1/4(335)
15(380)	14 3/4(375)	16 1/4(415)
18(455)	17 3/4(450)	19 1/4(490)

WALL HUNG GASKET

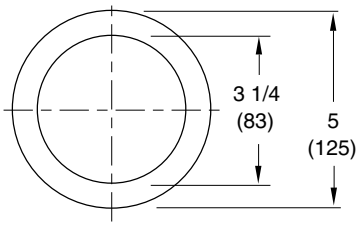

1"(25) Thk. Felt SAE NO. F-26
Impregnated with Gulf
"Red-Vet" Petrolatum

***NOTES:** Coupling should extend 1/4"(6) beyond finished wall.
Dimensions shown in parenthesis are in millimeters.

NOTE ON CUTTING

Nipple lengths shown in chart are standard lengths available. When a non-standard nipple length is required, the next longer size can be cut. A cutting charge will be added for nipples cut at plant.

Nipples can be field cut if necessary. Sufficient length of straight thread (as shown in chart) is supplied for this purpose.

NON-ADJUSTABLE

MINIMUM ⓒ DIMENSION

ADJUSTABLE

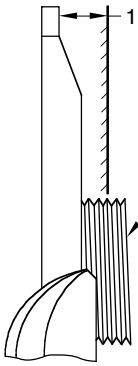

"C" Dimension less than the minimum listed in the chart are available as follows.

1 1/2"(38) min. using short butt nipple less coupling

*Suffix -M75 male end coupling giving "C" dimension of 1 1/2"(38) min. to 2"(51) max.

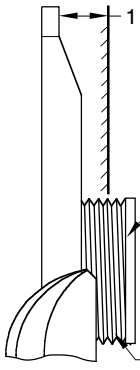

*SPECIAL ORDER ONLY

REV.	DATE	DESCRIPTION	BY	CKD. BY
A	4-12-95	Revised Dimensions	CMB	

WEIGHT POUNDS | VOLUME CUBIC FEET

FIGURE NUMBER
TYPE NO. 1 OUTLET CONN.

A | DRAWING NUMBER STYPE 1 | SIZE A | SCALE: NONE | DATE: 10-16-74 | APPROVED BY: R.P. | CHECKED BY: RS | DRAWN BY: BDS | TYPE NO. 1 OUTLET CONN. | FIGURE NUMBER