Goodman
Air Conditioning & Heating

GPC13H

2- to 5-Ton
Packaged Air Conditioner
13 SEER

Cooling Capacity: 24,000 - 59,000 BTU/h

Standard Features
- Energy-efficient compressor with internal relief valve
- PSC blower motor; EEM blower motor on 5-ton units
- Quiet horizontal discharge
- Copper tube/aluminum fin coil
- Totally enclosed, permanently lubricated condenser fan motor
- Fully charged system
- 5 kW to 20 kW electric heat kit available as a field-installed option
- AHRI Certified; ETL Listed

Cabinet Features
- Heavy-gauge galvanized-steel cabinet with attractive Architectural Gray powder-paint finish
- Fully insulated blower compartment with convenient access panels
- Louvered condenser coil protection
- One footprint; three heights

Contents
Nomenclature 2
Product Specifications 3
Expanded Cooling Data 5
Airflow Data 27
Heater Kit Specifications 29
Dimensions 30
Wiring Diagrams 31
Accessories 35

10 YEAR PARTS LIMITED WARRANTY*

* Complete warranty details available from your local dealer or at www.goodmanmfg.com. To receive the 10-Year Parts Limited Warranty, online registration must be completed within 60 days of installation. Online registration is not required in California or Québec.

BBB ACCREDITED BUSINESS

BETTER VALUE

NOMENCLATURE

G	P	H	13	36	H	2	1	A	*
1	2	3	4,5	6,7	8	9	10	11	12

Brand
G Goodman or Distinctions™

Product Category
P Packaged Unit

Type
H Heat Pump
C Air Conditioner

Efficiency
13 13 SEER
14 14 SEER
15 15 SEER
16 16 SEER

Nominal Capacity
24 2 Tons
30 2½ tons
36 3 Tons
42 3½ Tons
48 4 Tons
60 5 Tons

Configuration
H Horizontal
M Multi-position

Refrigerant
2 R-22
4 R-410A

Voltage Designator
1 208-230/1/60
3 208-230/3/60
4 460/3/60

Engineering
Major Revision

Engineering
Minor Revision

Specifications

	GPC13 24H41AC	GPC13 30H41AA	GPC13 30H41AC	GPC13 36H41AA	GPC13 36H41AC
Cooling Capacity					
Total BTU/h	24,000	28,600	28,600	36,000	36,000
Sensible BTU/h	18,600	22,700	22,700	26,000	26,000
SEER / EER	13.0 / 11.0	13.0 / 11.0	13.0 / 11.0	13.0 / 11.0	13.0 / 11.0
Decibels	76	76	76	78	78
AHRI #	4635457	4635469	4635458	4635470	4635459
Evaporator Motor					
Type	PSC	PSC	PSC	PSC	PSC
Wheel (D x W)	9 x 6	9 x 6	9 x 6	9 x 8	9 x 8
Nominal Cooling CFM	815	1,080	1,080	1,205	1,205
RLA / LRA	1.5 / 2.2	1.86 / 3.2	1.86 / 3.2	1.86 / 3.2	1.86 / 3.2
No. of Speeds	3	3	3	3	3
Horsepower - RPM	¼ - 952	⅓ - 1,020	⅓ - 1,020	⅓ - 1,020	⅓ - 1,020
Evaporator Coil					
Face Area (ft^2)	4.6	4.6	4.6	5.2	5.2
Rows Deep / Fins per Inch	3 / 14	3 / 14	3 / 14	3 / 14	3 / 14
Filter Size (")	20 x 20 x 1	20 x 25 x 1	20 x 25 x 1	25 x 25 x 1	25 x 25 x 1
Drain Size (NPT)	¾"	¾"	¾"	¾"	¾"
Refrigerant Charge (oz.)	63	80	62	85	61
Condenser Fan / Coil					
Horsepower - RPM	1/6 - 815	¼ - 830	1/6 - 815	¼ - 830	¼ - 830
RLA / LRA	1.1 / 1.7	1.5 / 3.0	1.1 / 1.7	1.5 / 3.0	1.5 / 3.0
Fan Diameter/ # Fan Blades	22 / 2	22 / 3	22 /2	22 /4	22 / 4
Face Area (ft^2)	12.3	13.4	12.3	13.4	12.3
Rows Deep / Fins per Inch	1 / 26	1 / 24	1 / 26	1 / 24	1 / 26
Compressor					
Quantity	1	1	1	1	1
Type	Scroll	Recip	Scroll	Scroll	Scroll
Stage	Single	Single	Single	Single	Single
Compressor RLA / LRA	13.5 / 58.3	9.8 / 55	12.8 / 64	16.7 / 79	16.7 / 79
Electrical Data					
Voltage-Phase	208/230-1	208/230-1	208/230-1	208/230-1	208/230-1
Indoor Blower FLA	1.5	1.86	1.86	1.86	1.86
Outdoor Fan RLA	1.7	1.5	1.7	1.5	1.5
Total Unit Amps	16.1	13.16	15.76	20.06	20.06
Min. Circuit Ampacity[1]	19.5	15.6	19	24.2	24.2
Max. Overcurrent Protection (amps)[2]	30	25	30	40	40
Ship Weight (lbs)	290	310	290	370	370

[1] Wire size should be determined in accordance with National Electrical Codes. Extensive wire runs will require larger wire sizes.

[2] May use fuses or HACR-type circuit breakers of the same size as noted.

Note: Always check the S&R plate for electrical data on the unit being installed.

Specifications (cont.)

	GPC13 42H41AC	GPC13 48H41BA	GPC13 49H41AB	GPC13 60H41BA	GPC13 60H41BC
Cooling Capacity					
Total BTU/h	41,000	45,500	45,500	57,500	57,500
Sensible BTU/h	31,600	34,700	34,700	43,000	43,000
SEER / EER	13.0 / 11.0	13.0 / 11.0	13.0 / 11.0	13.0 / 11.0	13.0 / 11.0
Decibels	78	80	80	80	80
AHRI #	4635460	4635472	4635461	4635473	4635462
Evaporator Motor					
Type	PSC	PSC	PSC	EEM	EEM
Wheel (D x W)	10 x 8	10 x 8	10 x 8	11 x 8	11 x 8
Nominal Cooling CFM	1,410	1,585	1,585	1,850	1,850
RLA / LRA	2.87 / 4.9	2.87 / 4.9	2.87 / 4.9	5.8 / 8.0	5.8 / 8.0
No. of Speeds	3	3	3	3	3
Horsepower - RPM	½ - 1,005	½ - 1,075	½ - 1,005	¾ - 1,250	¾ - 1,250
Evaporator Coil					
Face Area (ft^2)	6.2	6.2	6.2	7.0	7.0
Rows Deep / Fins per Inch	4 / 14	4 / 14	4 / 14	4 / 14	4 / 14
Filter Size (")	(2) 20x20x1	(2) 20x20x1	(2) 20x20x1	(2) 20x25x1	(2) 20x25x1
Drain Size (NPT)	¾"	¾"	¾"	¾"	¾"
Refrigerant Charge (oz.)	88	110	80	160	93
Condenser Fan / Coil					
Horsepower - RPM	¼ - 1,075	¼ - 1,075	¼ - 1,075	¼ - 1,075	¼ - 1,075
RLA / LRA	1.4 / 2.9	1.4 / 2.9	1.4 / 2.9	1.4 / 2.9	1.4 / 2.9
Fan Diameter/ # Fan Blades	22 / 4	22 / 4	22 / 4	22 / 4	22 / 4
Face Area (ft^2)	16	19.1	16	19.1	19.5
Rows Deep / Fins per Inch	1 / 28	1 / 21	1 / 28	2 / 16	1 / 28
Compressor					
Quantity	1	1	1	1	1
Type	Scroll	Scroll	Scroll	Scroll	Scroll
Stage	Single	Single	Single	Single	Single
Compressor RLA / LRA	17.9 / 112	19.9 / 109	19.9 / 109	26.4 / 134	26.4 / 134
Electrical Data					
Voltage-Phase	208/230-1	208/230-1	208/230-1	208/230-1	208/230-1
Indoor Blower FLA	2.87	2.87	2.87	5.8	5.8
Outdoor Fan RLA	1.4	1.4	1.4	1.4	1.4
Total Unit Amps	22.2	24.17	24.17	33.6	33.6
Min. Circuit Ampacity[1]	26.6	29.2	29.2	40.2	40.2
Max. Overcurrent Protection (amps)[2]	40	45	45	60	60
Ship Weight (lbs)	370	400	400	400	400

[1] Wire size should be determined in accordance with National Electrical Codes. Extensive wire runs will require larger wire sizes.

[2] May use fuses or HACR-type circuit breakers of the same size as noted.

Note: Always check the S&R plate for electrical data on the unit being installed.

Expanded Cooling Data — GPC1324H41AC

			Outdoor Ambient Temperature																							
			65ºF				75ºF				85ºF				95ºF				105ºF				115ºF			
			Entering Indoor Wet Bulb Temperature																							
IDB	Airflow		59	63	67	71	59	63	67	71	59	63	67	71	59	63	67	71	59	63	67	71	59	63	67	71
70	950	MBh	23.2	24.0	26.3	-	22.6	23.5	25.7	-	22.1	22.9	25.1	-	21.6	22.3	24.5	-	20.5	21.2	23.3	-	19.0	19.7	21.5	-
		S/T	1.00	1.00	1.00	-	1.00	1.00	1.00	-	1.00	1.00	1.00	-	1.00	1.00	1.00	-	1.00	1.00	1.00	-	1.00	1.00	1.00	-
		ΔT	22	23	25	-	22	23	25	-	21	22	24	-	21	22	24	-	20	21	23	-	18	19	21	-
		kW	1.63	1.67	1.72	-	1.75	1.79	1.84	-	1.86	1.90	1.96	-	1.95	1.99	2.06	-	2.03	2.07	2.14	-	2.10	2.14	2.21	-
		Amps	7.1	7.2	7.4	-	7.6	7.7	7.9	-	8.1	8.3	8.5	-	8.6	8.8	9.0	-	9.0	9.2	9.5	-	9.5	9.7	10.0	-
		Hi PR	217	234	247	-	244	263	277	-	278	299	315	-	316	340	359	-	356	383	404	-	393	423	447	-
		Lo PR	110	117	127	-	116	123	135	-	121	128	140	-	127	135	147	-	133	141	154	-	137	146	159	-
	850	MBh	22.8	23.7	25.9	-	22.3	23.1	25.3	-	21.8	22.6	24.7	-	21.2	22.0	24.1	-	20.2	20.9	22.9	-	18.7	19.4	21.2	-
		S/T	1.00	1.00	1.00	-	1.00	1.00	1.00	-	1.00	1.00	1.00	-	1.00	1.00	1.00	-	1.00	1.00	1.00	-	1.00	1.00	1.00	-
		ΔT	25	26	28	-	24	25	27	-	24	24	27	-	23	24	26	-	22	23	25	-	20	21	23	-
		kW	1.63	1.66	1.71	-	1.74	1.78	1.83	-	1.85	1.89	1.95	-	1.94	1.98	2.04	-	2.02	2.06	2.13	-	2.09	2.13	2.20	-
		Amps	7.0	7.2	7.4	-	7.5	7.7	7.9	-	8.1	8.2	8.5	-	8.5	8.7	9.0	-	9.0	9.2	9.5	-	9.5	9.7	9.9	-
		Hi PR	216	232	245	-	242	261	275	-	276	297	313	-	314	338	357	-	353	380	401	-	390	420	443	-
		Lo PR	109	116	127	-	115	123	134	-	120	127	139	-	126	134	146	-	132	140	153	-	136	145	158	-
	750	MBh	21.7	22.5	24.6	-	21.2	22.0	24.1	-	20.7	21.4	23.5	-	20.2	20.9	22.9	-	19.2	19.9	21.8	-	17.8	18.4	20.2	-
		S/T	1.00	1.00	1.00	-	1.00	1.00	1.00	-	1.00	1.00	1.00	-	1.00	1.00	1.00	-	1.00	1.00	1.00	-	1.00	1.00	1.00	-
		ΔT	27	28	30	-	26	27	29	-	25	26	29	-	25	26	28	-	23	24	27	-	22	23	25	-
		kW	1.60	1.63	1.68	-	1.72	1.75	1.81	-	1.82	1.86	1.92	-	1.91	1.95	2.01	-	1.99	2.03	2.09	-	2.05	2.10	2.16	-
		Amps	6.9	7.1	7.3	-	7.4	7.6	7.8	-	7.9	8.1	8.3	-	8.4	8.6	8.8	-	8.9	9.0	9.3	-	9.3	9.5	9.8	-
		Hi PR	212	228	241	-	237	256	270	-	270	291	307	-	308	331	350	-	346	372	393	-	382	412	435	-
		Lo PR	107	114	124	-	113	120	131	-	117	125	136	-	123	131	143	-	129	137	150	-	134	142	155	-
75	950	MBh	23.6	24.3	26.3	28.2	23.0	23.7	25.7	27.5	22.5	23.1	25.0	26.9	21.9	22.6	24.4	26.2	20.8	21.4	23.2	24.9	19.3	19.9	21.5	23.1
		S/T	1.00	1.00	1.00	1.00	1.00	1.00	1.00	1.00	1.00	1.00	1.00	1.00	1.00	1.00	1.00	1.00	1.00	1.00	1.00	1.00	1.00	1.00	1.00	1.00
		ΔT	23	23	25	27	22	23	25	27	22	22	24	26	21	22	24	25	20	21	22	24	19	19	21	22
		kW	1.65	1.68	1.73	1.78	1.77	1.80	1.86	1.92	1.87	1.91	1.97	2.04	1.97	2.01	2.07	2.14	2.05	2.09	2.16	2.23	2.12	2.16	2.23	2.30
		Amps	7.1	7.3	7.5	7.7	7.6	7.8	8.0	8.2	8.2	8.3	8.6	8.8	8.6	8.8	9.1	9.4	9.1	9.3	9.6	9.9	9.6	9.8	10.1	10.4
		Hi PR	220	236	250	260	247	265	280	292	280	302	319	332	319	344	363	378	359	387	408	426	397	427	451	470
		Lo PR	111	118	129	137	117	125	136	145	122	130	141	151	128	136	149	158	134	143	156	166	139	147	161	171
	850	MBh	23.2	23.9	25.9	27.8	22.7	23.4	25.3	27.1	22.1	22.8	24.7	26.5	21.6	**22.2**	24.1	25.8	20.5	21.1	22.9	24.5	19.0	19.6	21.2	22.7
		S/T	1.00	1.00	1.00	1.00	1.00	1.00	1.00	1.00	1.00	1.00	1.00	1.00	1.00	**1.00**	1.00	1.00	1.00	1.00	1.00	1.00	1.00	1.00	1.00	1.00
		ΔT	25	26	28	30	25	25	27	29	24	25	27	29	23	**24**	26	28	22	23	25	27	21	21	23	25
		kW	1.64	1.67	1.72	1.77	1.76	1.79	1.85	1.91	1.86	1.90	1.96	2.02	1.96	**2.00**	2.06	2.13	2.04	2.08	2.15	2.22	2.10	2.15	2.22	2.29
		Amps	7.1	7.2	7.4	7.7	7.6	7.7	7.9	8.2	8.1	8.3	8.5	8.8	8.6	**8.8**	9.0	9.3	9.1	9.3	9.5	9.8	9.5	9.7	10.0	10.4
		Hi PR	218	235	248	259	245	263	278	290	278	300	316	330	317	**341**	360	376	357	384	405	423	394	424	448	467
		Lo PR	110	117	128	136	116	124	135	144	121	129	140	150	127	**135**	148	157	133	142	155	165	138	146	160	170
	750	MBh	22.1	22.7	24.6	26.4	21.5	22.2	24.0	25.8	21.0	21.7	23.4	25.2	20.5	21.1	22.9	24.5	19.5	20.1	21.7	23.3	18.1	18.6	20.1	21.6
		S/T	1.00	1.00	1.00	1.00	1.00	1.00	1.00	1.00	1.00	1.00	1.00	1.00	1.00	1.00	1.00	1.00	1.00	1.00	1.00	1.00	1.00	1.00	1.00	1.00
		ΔT	27	28	30	32	26	27	29	32	26	27	29	31	25	26	28	30	24	25	27	29	22	23	25	26
		kW	1.61	1.65	1.69	1.75	1.73	1.77	1.82	1.88	1.83	1.87	1.93	1.99	1.93	1.97	2.03	2.09	2.00	2.05	2.11	2.18	2.07	2.11	2.18	2.25
		Amps	7.0	7.1	7.3	7.6	7.5	7.6	7.8	8.1	8.0	8.2	8.4	8.7	8.5	8.6	8.9	9.2	8.9	9.1	9.4	9.7	9.4	9.6	9.9	10.2
		Hi PR	214	230	243	253	240	258	273	284	273	294	310	323	311	334	353	368	350	376	397	414	386	416	439	458
		Lo PR	108	115	125	133	114	121	132	141	118	126	138	147	124	132	145	154	130	139	151	161	135	144	157	167

IDB: Entering Indoor Dry Bulb Temperature
High and low pressures are measured at the liquid and suction service valves.

Shaded area reflects ACCA (TVA) conditions

kW = Total system power
Amps = outdoor unit amps (comp.+fan)

Expanded Cooling Data — GPC1324H41AC (cont.)

			Outdoor Ambient Temperature																							
			65ºF				75ºF				85ºF				95ºF				105ºF				115ºF			
			Entering Indoor Wet Bulb Temperature																							
IDB	Airflow		59	63	67	71	59	63	67	71	59	63	67	71	59	63	67	71	59	63	67	71	59	63	67	71
80	950	MBh	24.0	24.5	26.2	28.0	23.4	23.9	25.6	27.3	22.9	23.4	25.0	26.7	22.3	22.8	24.4	26.0	21.2	21.7	23.1	24.7	19.6	20.1	21.4	22.9
		S/T	1.00	1.00	1.00	1.00	1.00	1.00	1.00	1.00	1.00	1.00	1.00	1.00	1.00	1.00	1.00	1.00	1.00	1.00	1.00	1.00	1.00	1.00	1.00	1.00
		ΔT	23	24	25	27	23	23	25	26	22	23	24	26	22	22	24	25	21	21	22	24	19	19	21	22
		kW	1.66	1.69	1.74	1.80	1.78	1.82	1.87	1.93	1.89	1.93	1.99	2.05	1.98	2.03	2.09	2.16	2.06	2.11	2.18	2.25	2.13	2.18	2.25	2.32
		Amps	7.2	7.3	7.5	7.8	7.7	7.8	8.0	8.3	8.2	8.4	8.6	8.9	8.7	8.9	9.2	9.5	9.2	9.4	9.7	10.0	9.7	9.9	10.2	10.5
		Hi PR	222	239	252	263	249	268	283	295	283	305	322	336	323	347	367	382	363	391	412	430	401	431	456	475
		Lo PR	112	119	130	139	118	126	137	146	123	131	143	152	129	137	150	160	135	144	157	167	140	149	163	173
	850	MBh	23.6	24.1	25.8	27.6	23.1	23.6	25.2	26.9	22.5	23.0	24.6	26.3	22.0	22.5	**24.0**	25.7	20.9	21.3	22.8	24.4	19.3	19.8	21.1	22.6
		S/T	1.00	1.00	1.00	1.00	1.00	1.00	1.00	1.00	1.00	1.00	1.00	1.00	1.00	1.00	**1.00**	1.00	1.00	1.00	1.00	1.00	1.00	1.00	1.00	1.00
		ΔT	26	26	28	30	25	26	27	29	24	25	27	28	24	24	**26**	28	23	23	25	26	21	21	23	24
		kW	1.65	1.68	1.73	1.79	1.77	1.81	1.86	1.92	1.88	1.92	1.98	2.04	1.97	2.01	**2.08**	2.15	2.05	2.10	2.16	2.23	2.12	2.17	2.24	2.31
		Amps	7.2	7.3	7.5	7.7	7.6	7.8	8.0	8.3	8.2	8.4	8.6	8.9	8.7	8.8	**9.1**	9.4	9.1	9.3	9.6	9.9	9.6	9.8	10.1	10.4
		Hi PR	220	237	250	261	247	266	281	293	281	303	320	333	320	345	**364**	380	360	388	410	427	398	428	452	472
		Lo PR	111	118	129	138	118	125	136	145	122	130	142	151	128	136	**149**	159	134	143	156	166	139	148	162	172
	750	MBh	22.5	22.9	24.5	26.2	21.9	22.4	23.9	25.6	21.4	21.9	23.4	25.0	20.9	21.3	22.8	24.4	19.8	20.3	21.7	23.2	18.4	18.8	20.1	21.4
		S/T	1.00	1.00	1.00	1.00	1.00	1.00	1.00	1.00	1.00	1.00	1.00	1.00	1.00	1.00	1.00	1.00	1.00	1.00	1.00	1.00	1.00	1.00	1.00	1.00
		ΔT	28	28	30	32	27	27	29	31	26	27	29	31	26	26	28	30	24	25	27	28	23	23	25	26
		kW	1.63	1.66	1.71	1.76	1.74	1.78	1.83	1.89	1.85	1.89	1.95	2.01	1.94	1.98	2.04	2.11	2.02	2.06	2.13	2.20	2.09	2.13	2.20	2.27
		Amps	7.0	7.2	7.4	7.6	7.5	7.7	7.9	8.1	8.1	8.2	8.5	8.7	8.5	8.7	9.0	9.2	9.0	9.2	9.5	9.8	9.5	9.7	9.9	10.3
		Hi PR	216	232	245	256	242	261	275	287	276	297	313	327	314	338	357	372	353	380	401	419	390	420	443	462
		Lo PR	109	116	127	135	115	123	134	142	120	127	139	148	126	134	146	156	132	140	153	163	136	145	158	169
85	950	MBh	24.4	24.9	26.1	27.8	23.8	24.3	25.5	27.2	23.3	23.7	24.8	26.5	22.7	23.1	24.2	25.9	21.6	22.0	23.0	24.6	20.0	20.4	21.3	22.8
		S/T	1.00	1.00	1.00	1.00	1.00	1.00	1.00	1.00	1.00	1.00	1.00	1.00	1.00	1.00	1.00	1.00	1.00	1.00	1.00	1.00	1.00	1.00	1.00	1.00
		ΔT	24	24	25	27	23	24	25	26	23	23	24	26	22	22	23	25	21	21	22	24	19	20	21	22
		kW	1.67	1.71	1.76	1.81	1.79	1.83	1.89	1.95	1.90	1.94	2.00	2.07	2.00	2.04	2.11	2.17	2.08	2.13	2.19	2.27	2.15	2.20	2.27	2.34
		Amps	7.2	7.4	7.6	7.8	7.7	7.9	8.1	8.4	8.3	8.5	8.7	9.0	8.8	9.0	9.2	9.5	9.3	9.5	9.7	10.1	9.7	10.0	10.3	10.6
		Hi PR	224	241	255	266	252	271	286	298	286	308	325	339	326	351	370	386	367	394	416	434	405	436	460	480
		Lo PR	113	120	131	140	120	127	139	148	124	132	144	154	130	139	152	161	137	145	159	169	141	150	164	175
	850	MBh	24.0	24.5	25.7	27.4	23.5	23.9	25.1	26.8	22.9	23.4	24.5	26.1	22.4	22.8	23.9	25.5	21.2	21.7	22.7	24.2	19.7	20.1	21.0	22.4
		S/T	1.00	1.00	1.00	1.00	1.00	1.00	1.00	1.00	1.00	1.00	1.00	1.00	1.00	1.00	1.00	1.00	1.00	1.00	1.00	1.00	1.00	1.00	1.00	1.00
		ΔT	26	27	28	30	25	26	27	29	25	25	26	28	24	25	26	28	23	23	25	26	21	22	23	24
		kW	1.66	1.70	1.75	1.80	1.79	1.82	1.88	1.94	1.89	1.93	1.99	2.06	1.99	2.03	2.09	2.16	2.07	2.11	2.18	2.25	2.14	2.19	2.26	2.33
		Amps	7.2	7.4	7.6	7.8	7.7	7.8	8.1	8.3	8.3	8.4	8.7	8.9	8.7	8.9	9.2	9.5	9.2	9.4	9.7	10.0	9.7	9.9	10.2	10.5
		Hi PR	223	240	253	264	250	269	284	296	284	306	323	337	324	348	368	383	364	392	414	431	402	433	457	477
		Lo PR	112	120	130	139	119	126	138	147	123	131	143	153	130	138	150	160	136	144	158	168	140	149	163	174
	750	MBh	22.8	23.3	24.4	26.0	22.3	22.7	23.8	25.4	21.8	22.2	23.3	24.8	21.2	21.7	22.7	24.2	20.2	20.6	21.6	23.0	18.7	19.1	20.0	21.3
		S/T	1.00	1.00	1.00	1.00	1.00	1.00	1.00	1.00	1.00	1.00	1.00	1.00	1.00	1.00	1.00	1.00	1.00	1.00	1.00	1.00	1.00	1.00	1.00	1.00
		ΔT	28	29	30	32	27	28	29	31	27	27	29	30	26	27	28	30	25	25	26	28	23	23	24	26
		kW	1.64	1.67	1.72	1.77	1.76	1.79	1.85	1.91	1.86	1.90	1.96	2.02	1.96	2.00	2.06	2.13	2.04	2.08	2.15	2.22	2.10	2.15	2.22	2.29
		Amps	7.1	7.2	7.4	7.7	7.6	7.7	7.9	8.2	8.1	8.3	8.5	8.8	8.6	8.8	9.0	9.3	9.1	9.3	9.5	9.8	9.5	9.7	10.0	10.4
		Hi PR	218	235	248	259	245	263	278	290	278	300	316	330	317	341	360	376	357	384	405	423	394	424	448	467
		Lo PR	110	117	128	136	116	124	135	144	121	129	140	150	127	135	147	157	133	142	155	165	138	146	160	170

IDB: Entering Indoor Dry Bulb Temperature

High and low pressures are measured at the liquid and suction service valves.

Shaded area reflects AHRI (TVA) conditions.

kW = Total system power

Amps = outdoor unit amps (comp.+fan)

Expanded Cooling Data — GPC1330H41AA

			Outdoor Ambient Temperature																							
			65ºF				75ºF				85ºF				95ºF				105ºF				115ºF			
			Entering Indoor Wet Bulb Temperature																							
IDB	Airflow		59	63	67	71	59	63	67	71	59	63	67	71	59	63	67	71	59	63	67	71	59	63	67	71
70	1180	MBh	28.2	29.3	32.0	-	27.6	28.6	31.3	-	26.9	27.9	30.6	-	26.3	27.2	29.8	-	24.9	25.8	28.3	-	23.1	23.9	26.2	-
		S/T	0.79	0.66	0.46	-	0.82	0.68	0.47	-	0.84	0.70	0.49	-	0.87	0.72	0.50	-	0.90	0.75	0.52	-	0.91	0.76	0.53	-
		ΔT	17	15	11	-	18	15	12	-	18	15	12	-	18	15	12	-	17	15	11	-	16	14	11	-
		kW	2.07	2.11	2.17	-	2.22	2.26	2.33	-	2.35	2.40	2.47	-	2.46	2.52	2.59	-	2.56	2.62	2.70	-	2.65	2.70	2.79	-
		Amps	8.8	9.0	9.2	-	9.4	9.6	9.8	-	10.0	10.2	10.5	-	10.6	10.8	11.1	-	11.2	11.4	11.8	-	11.8	12.0	12.4	-
		Hi PR	232	249	263	-	260	280	295	-	296	318	336	-	337	362	382	-	379	407	430	-	418	450	475	-
		Lo PR	111	118	129	-	118	125	137	-	122	130	142	-	128	137	149	-	135	143	156	-	139	148	162	-
	1050	MBh	27.4	28.4	31.1	-	26.8	27.7	30.4	-	26.1	27.1	29.7	-	25.5	26.4	28.9	-	24.2	25.1	27.5	-	22.4	23.2	25.5	-
		S/T	0.75	0.63	0.44	-	0.78	0.65	0.45	-	0.80	0.67	0.46	-	0.83	0.69	0.48	-	0.86	0.72	0.50	-	0.87	0.72	0.50	-
		ΔT	18	16	12	-	18	16	12	-	18	16	12	-	18	16	12	-	18	16	12	-	17	15	11	-
		kW	2.05	2.09	2.16	-	2.20	2.25	2.31	-	2.33	2.38	2.45	-	2.45	2.50	2.57	-	2.54	2.60	2.68	-	2.63	2.68	2.77	-
		Amps	8.7	8.9	9.1	-	9.3	9.5	9.8	-	10.0	10.2	10.5	-	10.5	10.8	11.1	-	11.1	11.3	11.7	-	11.7	11.9	12.3	-
		Hi PR	229	247	261	-	257	277	292	-	293	315	332	-	333	359	379	-	375	403	426	-	414	446	471	-
		Lo PR	110	117	128	-	116	124	135	-	121	129	141	-	127	135	148	-	133	142	155	-	138	147	160	-
	920	MBh	25.3	26.2	28.7	-	24.7	25.6	28.1	-	24.1	25.0	27.4	-	23.5	24.4	26.7	-	22.3	23.2	25.4	-	20.7	21.5	23.5	-
		S/T	0.73	0.61	0.42	-	0.75	0.63	0.44	-	0.77	0.65	0.45	-	0.80	0.67	0.46	-	0.83	0.69	0.48	-	0.83	0.70	0.48	-
		ΔT	18	16	12	-	19	16	12	-	19	16	12	-	19	16	12	-	18	16	12	-	17	15	11	-
		kW	2.01	2.05	2.11	-	2.15	2.19	2.26	-	2.28	2.32	2.39	-	2.39	2.44	2.51	-	2.48	2.53	2.61	-	2.56	2.62	2.70	-
		Amps	8.5	8.7	8.9	-	9.1	9.3	9.5	-	9.7	9.9	10.2	-	10.3	10.5	10.8	-	10.9	11.1	11.4	-	11.4	11.6	12.0	-
		Hi PR	222	239	253	-	250	269	284	-	284	305	322	-	323	348	367	-	364	391	413	-	402	432	457	-
		Lo PR	107	114	124	-	113	120	131	-	117	125	136	-	123	131	143	-	129	137	150	-	134	142	155	-
75	1180	MBh	28.7	29.5	32.0	34.3	28.0	28.9	31.2	33.5	27.4	28.2	30.5	32.7	26.7	27.5	29.8	31.9	25.4	26.1	28.3	30.3	23.5	24.2	26.2	28.1
		S/T	0.90	0.80	0.61	0.39	0.93	0.83	0.63	0.41	0.95	0.85	0.65	0.42	0.99	0.88	0.67	0.43	1.00	0.91	0.69	0.45	1.00	0.92	0.70	0.45
		ΔT	20	19	15	10	20	19	15	11	20	19	15	11	20	19	15	11	20	19	15	11	18	17	14	10
		kW	2.08	2.13	2.19	2.25	2.23	2.28	2.35	2.42	2.37	2.42	2.49	2.57	2.48	2.54	2.62	2.70	2.58	2.64	2.72	2.81	2.67	2.73	2.81	2.91
		Amps	8.9	9.0	9.3	9.6	9.4	9.6	9.9	10.2	10.1	10.3	10.6	11.0	10.7	10.9	11.2	11.6	11.3	11.5	11.9	12.2	11.9	12.1	12.5	12.9
		Hi PR	234	252	266	277	262	282	298	311	299	321	339	354	340	366	386	403	382	412	435	453	423	455	480	501
		Lo PR	112	120	131	139	119	126	138	147	123	131	143	153	130	138	151	160	136	145	158	168	141	150	163	174
	1050	MBh	27.9	28.7	31.1	33.3	27.2	28.0	30.3	32.6	26.6	27.4	29.6	31.8	25.9	**26.7**	28.9	31.0	24.6	25.4	27.4	29.5	22.8	23.5	25.4	27.3
		S/T	0.86	0.77	0.58	0.37	0.89	0.79	0.60	0.39	0.91	0.81	0.62	0.40	0.94	**0.84**	0.64	0.41	0.98	0.87	0.66	0.42	0.98	0.88	0.67	0.43
		ΔT	21	19	16	11	21	19	16	11	21	20	16	11	21	**20**	16	11	21	19	16	11	20	18	15	10
		kW	2.07	2.11	2.17	2.24	2.22	2.26	2.33	2.40	2.35	2.40	2.47	2.55	2.47	**2.52**	2.60	2.68	2.56	2.62	2.70	2.79	2.65	2.71	2.79	2.88
		Amps	8.8	9.0	9.2	9.5	9.4	9.6	9.8	10.1	10.0	10.3	10.5	10.9	10.6	**10.8**	11.2	11.5	11.2	11.4	11.8	12.2	11.8	12.0	12.4	12.8
		Hi PR	232	249	263	275	260	280	295	308	296	318	336	350	337	**362**	383	399	379	408	430	449	418	450	475	496
		Lo PR	111	118	129	138	118	125	137	145	122	130	142	151	128	**137**	149	159	135	143	156	166	139	148	162	172
	920	MBh	25.7	26.5	28.7	30.8	25.1	25.9	28.0	30.0	24.5	25.2	27.3	29.3	23.9	24.6	26.7	28.6	22.7	23.4	25.3	27.2	21.1	21.7	23.5	25.2
		S/T	0.83	0.74	0.56	0.36	0.86	0.77	0.58	0.37	0.88	0.79	0.59	0.38	0.91	0.81	0.61	0.39	0.94	0.84	0.64	0.41	0.95	0.85	0.64	0.41
		ΔT	21	20	16	11	21	20	16	11	22	20	16	11	22	20	16	11	21	20	16	11	20	18	15	10
		kW	2.02	2.06	2.12	2.19	2.17	2.21	2.28	2.35	2.29	2.34	2.41	2.49	2.41	2.46	2.53	2.61	2.50	2.56	2.64	2.72	2.59	2.64	2.72	2.81
		Amps	8.6	8.8	9.0	9.3	9.2	9.3	9.6	9.9	9.8	10.0	10.3	10.6	10.4	10.6	10.9	11.2	10.9	11.2	11.5	11.9	11.5	11.7	12.1	12.5
		Hi PR	225	242	255	266	252	271	286	299	287	309	326	340	327	351	371	387	367	395	417	435	406	437	461	481
		Lo PR	108	115	125	134	114	121	132	141	119	126	138	147	125	132	145	154	130	139	152	161	135	144	157	167

IDB: Entering Indoor Dry Bulb Temperature

Shaded area reflects ACCA (TVA) conditions

kW = Total system power

High and low pressures are measured at the liquid and suction service valves.

Amps = outdoor unit amps (comp.+fan)

Expanded Cooling Data — GPC1330H41AA (cont.)

			Outdoor Ambient Temperature																							
			65ºF				75ºF				85ºF				95ºF				105ºF				115ºF			
			Entering Indoor Wet Bulb Temperature																							
IDB	Airflow		59	63	67	71	59	63	67	71	59	63	67	71	59	63	67	71	59	63	67	71	59	63	67	71
80	1180	MBh	29.2	29.8	31.9	34.1	28.5	29.2	31.1	33.3	27.9	28.5	30.4	32.5	27.2	27.8	29.7	31.7	25.8	26.4	28.2	30.1	23.9	24.4	26.1	27.9
		S/T	1.00	0.92	0.75	0.56	1.00	0.96	0.78	0.58	1.00	1.00	0.80	0.60	1.00	1.00	0.83	0.62	1.00	1.00	0.86	0.64	1.00	1.00	0.86	0.65
		ΔT	23	21	19	15	22	22	19	15	22	22	19	15	21	22	19	15	20	21	19	15	19	19	18	14
		kW	2.10	2.14	2.21	2.27	2.25	2.30	2.37	2.44	2.39	2.44	2.51	2.59	2.50	2.56	2.64	2.72	2.60	2.66	2.74	2.83	2.69	2.75	2.84	2.93
		Amps	8.9	9.1	9.3	9.6	9.5	9.7	10.0	10.3	10.2	10.4	10.7	11.0	10.8	11.0	11.3	11.7	11.4	11.6	12.0	12.3	12.0	12.2	12.6	13.0
		Hi PR	236	254	269	280	265	285	301	314	302	324	343	357	343	370	390	407	386	416	439	458	427	459	485	506
		Lo PR	114	121	132	140	120	128	139	148	125	133	145	154	131	139	152	162	137	146	159	170	142	151	165	176
	1050	MBh	28.4	29.0	31.0	33.1	27.7	28.3	30.2	32.3	27.0	27.6	29.5	31.6	26.4	27.0	**28.8**	30.8	25.1	25.6	27.4	29.2	23.2	23.7	25.3	27.1
		S/T	0.94	0.88	0.72	0.54	0.97	0.91	0.74	0.56	1.00	0.94	0.76	0.57	1.00	0.97	**0.79**	0.59	1.00	1.00	0.82	0.61	1.00	1.00	0.82	0.62
		ΔT	23	22	19	16	24	23	20	16	24	23	20	16	23	23	**20**	16	22	22	20	16	20	21	18	15
		kW	2.08	2.13	2.19	2.25	2.23	2.28	2.35	2.42	2.37	2.42	2.49	2.57	2.48	2.54	**2.62**	2.70	2.58	2.64	2.72	2.81	2.67	2.73	2.81	2.91
		Amps	8.9	9.0	9.3	9.6	9.4	9.6	9.9	10.2	10.1	10.3	10.6	11.0	10.7	10.9	**11.2**	11.6	11.3	11.5	11.9	12.3	11.9	12.1	12.5	12.9
		Hi PR	234	252	266	277	263	282	298	311	299	321	339	354	340	366	**386**	403	383	412	435	453	423	455	480	501
		Lo PR	112	120	131	139	119	126	138	147	123	131	143	153	130	138	**151**	160	136	145	158	168	141	150	163	174
	920	MBh	26.2	26.7	28.6	30.5	25.6	26.1	27.9	29.8	25.0	25.5	27.2	29.1	24.3	24.9	26.6	28.4	23.1	23.6	25.3	27.0	21.4	21.9	23.4	25.0
		S/T	0.91	0.85	0.69	0.52	0.94	0.88	0.72	0.54	0.96	0.90	0.74	0.55	0.99	0.93	0.76	0.57	1.03	0.97	0.79	0.59	1.04	0.98	0.79	0.59
		ΔT	24	23	20	16	24	23	20	16	24	23	20	16	24	23	20	16	24	23	20	16	22	21	19	15
		kW	2.04	2.08	2.14	2.20	2.18	2.23	2.29	2.37	2.31	2.36	2.43	2.51	2.43	2.48	2.55	2.63	2.52	2.58	2.66	2.74	2.61	2.66	2.75	2.83
		Amps	8.7	8.8	9.1	9.3	9.2	9.4	9.7	10.0	9.9	10.1	10.4	10.7	10.5	10.7	11.0	11.3	11.0	11.3	11.6	12.0	11.6	11.8	12.2	12.6
		Hi PR	227	244	258	269	255	274	289	302	290	312	329	343	330	355	375	391	371	399	422	440	410	441	466	486
		Lo PR	109	116	127	135	115	123	134	143	120	127	139	148	126	134	146	156	132	140	153	163	136	145	158	169
85	1180	MBh	29.7	30.3	31.7	33.9	29.0	29.6	31.0	33.1	28.3	28.9	30.3	32.3	27.6	28.2	29.5	31.5	26.3	26.8	28.0	29.9	24.3	24.8	26.0	27.7
		S/T	1.00	1.00	0.90	0.73	1.00	1.00	0.93	0.76	1.00	1.00	0.96	0.78	1.00	1.00	0.99	0.80	1.00	1.00	1.00	0.83	1.00	1.00	1.00	0.84
		ΔT	23	24	22	19	23	23	23	19	22	23	23	20	22	22	23	20	20	21	22	19	19	19	20	18
		kW	2.12	2.16	2.22	2.29	2.27	2.32	2.39	2.46	2.40	2.45	2.53	2.61	2.52	2.58	2.66	2.74	2.63	2.68	2.77	2.86	2.71	2.77	2.86	2.95
		Amps	9.0	9.2	9.4	9.7	9.6	9.8	10.1	10.4	10.3	10.5	10.8	11.1	10.9	11.1	11.4	11.8	11.5	11.7	12.1	12.4	12.1	12.3	12.7	13.1
		Hi PR	239	257	271	283	268	288	304	317	305	328	346	361	347	373	394	411	390	420	443	463	431	464	490	511
		Lo PR	115	122	133	142	121	129	141	150	126	134	146	156	132	141	154	164	139	147	161	171	143	153	167	177
	1050	MBh	28.9	29.4	30.8	32.9	28.2	28.7	30.1	32.1	27.5	28.0	29.4	31.3	26.8	27.4	28.7	30.6	25.5	26.0	27.2	29.0	23.6	24.1	25.2	26.9
		S/T	0.99	0.95	0.86	0.70	1.00	0.99	0.89	0.72	1.00	1.00	0.91	0.74	1.00	1.00	0.94	0.76	1.00	1.00	0.98	0.79	1.00	1.00	0.99	0.80
		ΔT	25	24	23	20	25	25	23	20	24	25	23	20	24	24	24	20	22	23	23	20	21	21	22	19
		kW	2.10	2.14	2.21	2.27	2.25	2.30	2.37	2.44	2.39	2.44	2.51	2.59	2.50	2.56	2.64	2.72	2.60	2.66	2.74	2.83	2.69	2.75	2.84	2.93
		Amps	8.9	9.1	9.3	9.6	9.5	9.7	10.0	10.3	10.2	10.4	10.7	11.0	10.8	11.0	11.3	11.7	11.4	11.6	12.0	12.3	12.0	12.2	12.6	13.0
		Hi PR	236	254	269	280	265	285	301	314	302	324	343	357	343	370	390	407	386	416	439	458	427	459	485	506
		Lo PR	114	121	132	140	120	128	139	148	125	133	145	154	131	139	152	162	137	146	159	170	142	151	165	176
	920	MBh	26.6	27.1	28.4	30.3	26.0	26.5	27.8	29.6	25.4	25.9	27.1	28.9	24.8	25.3	26.4	28.2	23.5	24.0	25.1	26.8	21.8	22.2	23.3	24.8
		S/T	0.95	0.92	0.83	0.67	0.98	0.95	0.86	0.70	1.00	0.97	0.88	0.71	1.00	1.00	0.91	0.74	1.00	1.00	0.94	0.76	1.00	1.00	0.95	0.77
		ΔT	25	25	24	20	26	25	24	21	25	25	24	21	25	25	24	21	24	24	24	20	22	22	22	19
		kW	2.05	2.09	2.15	2.22	2.20	2.24	2.31	2.38	2.33	2.38	2.45	2.53	2.44	2.50	2.57	2.66	2.54	2.60	2.68	2.76	2.63	2.68	2.77	2.86
		Amps	8.7	8.9	9.1	9.4	9.3	9.5	9.7	10.1	10.0	10.2	10.5	10.8	10.5	10.8	11.1	11.4	11.1	11.3	11.7	12.0	11.7	11.9	12.3	12.7
		Hi PR	229	247	260	272	257	277	292	305	292	315	332	347	333	358	379	395	375	403	426	444	414	446	471	491
		Lo PR	110	117	128	136	116	124	135	144	121	129	140	150	127	135	148	157	133	142	155	165	138	147	160	170

IDB: Entering Indoor Dry Bulb Temperature

Shaded area reflects AHRI (TVA) conditions.

kW = Total system power

High and low pressures are measured at the liquid and suction service valves.

Amps = outdoor unit amps (comp.+fan)

Expanded Cooling Data — GPC1330H41AC

			Outdoor Ambient Temperature																							
			65ºF				75ºF				85ºF				95ºF				105ºF				115ºF			
			Entering Indoor Wet Bulb Temperature																							
IDB	Airflow		59	63	67	71	59	63	67	71	59	63	67	71	59	63	67	71	59	63	67	71	59	63	67	71
70	1180	MBh	28.0	29.0	31.8	-	27.4	28.4	31.1	-	26.7	27.7	30.3	-	26.1	27.0	29.6	-	24.8	25.7	28.1	-	22.9	23.8	26.1	-
		S/T	0.76	0.64	0.44	-	0.79	0.66	0.46	-	0.81	0.68	0.47	-	0.84	0.70	0.48	-	0.87	0.72	0.50	-	0.87	0.73	0.51	-
		ΔT	17	14	11	-	17	15	11	-	17	15	11	-	17	15	11	-	17	14	11	-	16	14	10	-
		kW	2.04	2.08	2.14	-	2.19	2.23	2.30	-	2.32	2.37	2.44	-	2.44	2.49	2.57	-	2.54	2.59	2.67	-	2.62	2.68	2.76	-
		Amps	8.8	9.0	9.2	-	9.4	9.6	9.8	-	10.0	10.3	10.5	-	10.6	10.8	11.1	-	11.2	11.4	11.7	-	11.8	12.0	12.3	-
		Hi PR	226	243	256	-	253	272	288	-	288	310	327	-	328	353	373	-	369	397	419	-	408	439	463	-
		Lo PR	109	116	127	-	116	123	134	-	120	128	139	-	126	134	146	-	132	141	154	-	137	145	159	-
	1050	MBh	27.2	28.2	30.9	-	26.6	27.5	30.2	-	25.9	26.9	29.5	-	25.3	26.2	28.7	-	24.0	24.9	27.3	-	22.3	23.1	25.3	-
		S/T	0.73	0.61	0.42	-	0.75	0.63	0.44	-	0.77	0.64	0.45	-	0.80	0.67	0.46	-	0.83	0.69	0.48	-	0.83	0.70	0.48	-
		ΔT	17	15	11	-	18	15	12	-	18	15	12	-	18	15	12	-	17	15	11	-	16	14	11	-
		kW	2.02	2.06	2.13	-	2.17	2.22	2.28	-	2.30	2.35	2.42	-	2.42	2.47	2.55	-	2.52	2.57	2.65	-	2.60	2.66	2.74	-
		Amps	8.8	8.9	9.2	-	9.3	9.5	9.8	-	10.0	10.2	10.5	-	10.5	10.8	11.1	-	11.1	11.3	11.7	-	11.7	11.9	12.2	-
		Hi PR	223	240	254	-	251	270	285	-	285	307	324	-	325	349	369	-	365	393	415	-	404	434	459	-
		Lo PR	108	115	126	-	114	122	133	-	119	126	138	-	125	133	145	-	131	139	152	-	135	144	157	-
	920	MBh	25.1	26.0	28.5	-	24.5	25.4	27.9	-	23.9	24.8	27.2	-	23.4	24.2	26.5	-	22.2	23.0	25.2	-	20.6	21.3	23.3	-
		S/T	0.70	0.58	0.41	-	0.73	0.61	0.42	-	0.74	0.62	0.43	-	0.77	0.64	0.44	-	0.80	0.67	0.46	-	0.80	0.67	0.47	-
		ΔT	18	15	12	-	18	15	12	-	18	15	12	-	18	16	12	-	18	15	12	-	17	14	11	-
		kW	1.98	2.02	2.08	-	2.12	2.16	2.23	-	2.25	2.30	2.37	-	2.36	2.41	2.49	-	2.46	2.51	2.59	-	2.54	2.59	2.67	-
		Amps	8.6	8.7	9.0	-	9.1	9.3	9.5	-	9.7	9.9	10.2	-	10.3	10.5	10.8	-	10.8	11.1	11.4	-	11.4	11.6	12.0	-
		Hi PR	217	233	246	-	243	262	276	-	277	298	314	-	315	339	358	-	354	381	403	-	391	421	445	-
		Lo PR	105	112	122	-	111	118	129	-	115	123	134	-	121	129	141	-	127	135	147	-	131	140	153	-
75	1180	MBh	28.5	29.3	31.8	34.1	27.8	28.7	31.0	33.3	27.2	28.0	30.3	32.5	26.5	27.3	29.5	31.7	25.2	25.9	28.1	30.1	23.3	24.0	26.0	27.9
		S/T	0.87	0.77	0.59	0.38	0.90	0.80	0.61	0.39	0.92	0.82	0.62	0.40	0.95	0.85	0.64	0.41	0.99	0.88	0.67	0.43	0.99	0.89	0.67	0.43
		ΔT	19	18	14	10	19	18	15	10	19	18	15	10	20	18	15	10	19	18	15	10	18	17	14	9
		kW	2.05	2.10	2.16	2.23	2.21	2.25	2.32	2.39	2.34	2.39	2.46	2.54	2.46	2.51	2.59	2.67	2.56	2.61	2.70	2.78	2.64	2.70	2.79	2.88
		Amps	8.9	9.1	9.3	9.6	9.5	9.6	9.9	10.2	10.1	10.3	10.6	10.9	10.7	10.9	11.2	11.6	11.3	11.5	11.8	12.2	11.8	12.1	12.4	12.9
		Hi PR	228	245	259	270	256	275	291	303	291	313	331	345	331	357	376	393	373	401	424	442	412	443	468	488
		Lo PR	110	118	128	137	117	124	136	144	121	129	141	150	127	136	148	158	134	142	155	165	138	147	160	171
	1050	MBh	27.7	28.5	30.8	33.1	27.0	27.8	30.1	32.3	26.4	27.2	29.4	31.6	25.7	**26.5**	28.7	30.8	24.5	25.2	27.3	29.2	22.7	23.3	25.2	27.1
		S/T	0.83	0.74	0.56	0.36	0.86	0.77	0.58	0.37	0.88	0.78	0.59	0.38	0.91	**0.81**	0.61	0.39	0.94	0.84	0.64	0.41	0.95	0.85	0.64	0.41
		ΔT	20	18	15	10	20	19	15	11	20	19	15	11	20	**19**	15	11	20	19	15	10	19	17	14	10
		kW	2.04	2.08	2.14	2.21	2.19	2.23	2.30	2.38	2.32	2.37	2.44	2.52	2.44	**2.49**	2.57	2.65	2.54	2.59	2.67	2.76	2.62	2.68	2.77	2.86
		Amps	8.8	9.0	9.2	9.5	9.4	9.6	9.8	10.1	10.1	10.3	10.5	10.9	10.6	**10.8**	11.1	11.5	11.2	11.4	11.8	12.1	11.8	12.0	12.3	12.8
		Hi PR	226	243	256	267	253	273	288	300	288	310	327	341	328	**353**	373	389	369	397	419	437	408	439	463	483
		Lo PR	109	116	127	135	116	123	134	143	120	128	139	149	126	**134**	147	156	132	141	154	164	137	145	159	169
	920	MBh	25.5	26.3	28.5	30.5	24.9	25.7	27.8	29.8	24.4	25.1	27.1	29.1	23.8	24.5	26.5	28.4	22.6	23.2	25.2	27.0	20.9	21.5	23.3	25.0
		S/T	0.80	0.71	0.54	0.35	0.82	0.74	0.56	0.36	0.85	0.76	0.57	0.37	0.87	0.78	0.59	0.38	0.91	0.81	0.61	0.39	0.91	0.82	0.62	0.40
		ΔT	20	19	15	11	21	19	16	11	21	19	16	11	21	19	16	11	20	19	15	11	19	18	14	10
		kW	1.99	2.03	2.09	2.16	2.14	2.18	2.25	2.32	2.27	2.31	2.39	2.46	2.38	2.43	2.51	2.59	2.48	2.53	2.61	2.69	2.56	2.61	2.70	2.78
		Amps	8.6	8.8	9.0	9.3	9.2	9.4	9.6	9.9	9.8	10.0	10.3	10.6	10.4	10.6	10.9	11.2	10.9	11.2	11.5	11.8	11.5	11.7	12.1	12.4
		Hi PR	219	236	249	259	246	264	279	291	279	301	317	331	318	342	362	377	358	385	407	424	395	426	449	469
		Lo PR	106	113	123	131	112	119	130	139	116	124	135	144	122	130	142	151	128	136	149	159	133	141	154	164

IDB: Entering Indoor Dry Bulb Temperature
High and low pressures are measured at the liquid and suction service valves.

Shaded area reflects ACCA (TVA) conditions

kW = Total system power
Amps = outdoor unit amps (comp.+fan)

Expanded Cooling Data — GPC1330H41AC (cont.)

			Outdoor Ambient Temperature																							
			65ºF				75ºF				85ºF				95ºF				105ºF				115ºF			
			Entering Indoor Wet Bulb Temperature																							
IDB	Airflow		59	63	67	71	59	63	67	71	59	63	67	71	59	63	67	71	59	63	67	71	59	63	67	71
80	1180	MBh	29.0	29.6	31.7	33.9	28.3	29.0	30.9	33.1	27.7	28.3	30.2	32.3	27.0	27.6	29.5	31.5	25.6	26.2	28.0	29.9	23.7	24.3	25.9	27.7
		S/T	0.95	0.89	0.72	0.54	1.00	0.92	0.75	0.56	1.00	0.95	0.77	0.58	1.00	1.00	0.79	0.59	1.00	1.00	0.82	0.62	1.00	1.00	0.83	0.62
		ΔT	21	21	18	14	22	21	18	14	22	21	18	14	21	21	18	15	20	20	18	14	19	19	17	13
		kW	2.07	2.11	2.18	2.24	2.22	2.27	2.34	2.41	2.36	2.41	2.48	2.56	2.48	2.53	2.61	2.69	2.58	2.63	2.72	2.81	2.66	2.72	2.81	2.90
		Amps	8.9	9.1	9.4	9.6	9.5	9.7	10.0	10.3	10.2	10.4	10.7	11.0	10.8	11.0	11.3	11.7	11.4	11.6	11.9	12.3	11.9	12.2	12.5	13.0
		Hi PR	230	248	262	273	258	278	294	306	294	316	334	348	335	360	380	397	376	405	428	446	416	448	473	493
		Lo PR	112	119	130	138	118	125	137	146	123	130	142	152	129	137	149	159	135	143	157	167	140	148	162	173
	1050	MBh	28.2	28.8	30.7	32.9	27.5	28.1	30.0	32.1	26.9	27.4	29.3	31.3	26.2	26.8	**28.6**	30.6	24.9	25.4	27.2	29.0	23.1	23.6	25.2	26.9
		S/T	0.91	0.85	0.69	0.52	0.94	0.88	0.72	0.54	0.96	0.90	0.73	0.55	0.99	0.93	**0.76**	0.57	1.00	0.97	0.79	0.59	1.00	0.97	0.79	0.59
		ΔT	22	21	19	15	23	22	19	15	23	22	19	15	23	22	**19**	15	22	22	19	15	20	20	17	14
		kW	2.05	2.10	2.16	2.23	2.21	2.25	2.32	2.39	2.34	2.39	2.46	2.54	2.46	2.51	**2.59**	2.67	2.56	2.61	2.70	2.78	2.64	2.70	2.79	2.88
		Amps	8.9	9.1	9.3	9.6	9.5	9.6	9.9	10.2	10.1	10.3	10.6	11.0	10.7	10.9	**11.2**	11.6	11.3	11.5	11.8	12.2	11.8	12.1	12.4	12.9
		Hi PR	228	245	259	270	256	275	291	303	291	313	331	345	331	357	**377**	393	373	401	424	442	412	443	468	488
		Lo PR	110	118	128	137	117	124	136	144	121	129	141	150	127	136	**148**	158	134	142	155	165	138	147	160	171
	920	MBh	26.0	26.6	28.4	30.3	25.4	25.9	27.7	29.6	24.8	25.3	27.1	28.9	24.2	24.7	26.4	28.2	23.0	23.5	25.1	26.8	21.3	21.7	23.2	24.8
		S/T	0.87	0.82	0.67	0.50	0.90	0.85	0.69	0.52	0.93	0.87	0.71	0.53	0.96	0.90	0.73	0.55	0.99	0.93	0.76	0.57	1.00	0.94	0.76	0.57
		ΔT	23	22	19	15	23	22	19	15	23	22	19	15	23	22	19	15	23	22	19	15	21	20	18	14
		kW	2.01	2.05	2.11	2.17	2.15	2.20	2.27	2.34	2.28	2.33	2.40	2.48	2.40	2.45	2.53	2.61	2.50	2.55	2.63	2.72	2.58	2.63	2.72	2.81
		Amps	8.7	8.9	9.1	9.4	9.2	9.4	9.7	10.0	9.9	10.1	10.4	10.7	10.5	10.7	11.0	11.3	11.0	11.2	11.6	11.9	11.6	11.8	12.1	12.5
		Hi PR	221	238	251	262	248	267	282	294	282	304	321	334	321	346	365	381	362	389	411	429	399	430	454	473
		Lo PR	107	114	124	133	113	120	132	140	118	125	137	146	124	132	144	153	130	138	150	160	134	143	156	166
85	1180	MBh	29.5	30.1	31.5	33.6	28.8	29.4	30.8	32.8	28.1	28.7	30.0	32.1	27.5	28.0	29.3	31.3	26.1	26.6	27.8	29.7	24.2	24.6	25.8	27.5
		S/T	1.00	0.96	0.87	0.70	1.00	1.00	0.90	0.73	1.00	1.00	0.92	0.75	1.00	1.00	0.95	0.77	1.00	1.00	0.99	0.80	1.00	1.00	0.99	0.81
		ΔT	23	23	21	18	22	23	22	19	22	22	22	19	21	22	22	19	20	21	21	19	19	19	20	17
		kW	2.09	2.13	2.19	2.26	2.24	2.29	2.36	2.43	2.38	2.43	2.50	2.58	2.50	2.55	2.63	2.72	2.60	2.65	2.74	2.83	2.69	2.75	2.83	2.93
		Amps	9.0	9.2	9.4	9.7	9.6	9.8	10.1	10.4	10.3	10.5	10.8	11.1	10.9	11.1	11.4	11.8	11.5	11.7	12.0	12.4	12.0	12.3	12.6	13.1
		Hi PR	233	250	264	276	261	281	297	309	297	319	337	352	338	364	384	401	380	409	432	451	420	452	477	498
		Lo PR	113	120	131	139	119	127	138	147	124	132	144	153	130	138	151	161	136	145	158	169	141	150	164	174
	1050	MBh	28.7	29.2	30.6	32.6	28.0	28.5	29.9	31.9	27.3	27.9	29.2	31.1	26.7	27.2	28.5	30.4	25.3	25.8	27.0	28.8	23.5	23.9	25.0	26.7
		S/T	0.95	0.92	0.83	0.67	0.98	0.95	0.86	0.69	1.00	0.97	0.88	0.71	1.00	1.00	0.91	0.74	1.00	1.00	0.94	0.76	1.00	1.00	0.95	0.77
		ΔT	24	23	22	19	24	24	22	19	24	24	22	19	23	24	23	20	22	23	22	19	21	21	21	18
		kW	2.07	2.11	2.18	2.24	2.22	2.27	2.34	2.41	2.36	2.41	2.48	2.56	2.48	2.53	2.61	2.69	2.58	2.63	2.72	2.81	2.66	2.72	2.81	2.90
		Amps	8.9	9.1	9.4	9.6	9.5	9.7	10.0	10.3	10.2	10.4	10.7	11.0	10.8	11.0	11.3	11.7	11.4	11.6	11.9	12.3	11.9	12.2	12.5	13.0
		Hi PR	230	248	262	273	258	278	294	306	294	316	334	348	335	360	380	397	376	405	428	446	416	448	473	493
		Lo PR	112	119	130	138	118	125	137	146	123	130	142	152	129	137	149	159	135	143	157	167	140	148	162	173
	920	MBh	26.4	27.0	28.2	30.1	25.8	26.3	27.6	29.4	25.2	25.7	26.9	28.7	24.6	25.1	26.3	28.0	23.4	23.8	25.0	26.6	21.7	22.1	23.1	24.7
		S/T	0.92	0.88	0.80	0.65	0.95	0.92	0.83	0.67	0.97	0.94	0.85	0.69	1.00	0.97	0.87	0.71	1.00	1.00	0.91	0.74	1.00	1.00	0.91	0.74
		ΔT	24	24	22	19	24	24	23	20	25	24	23	20	25	24	23	20	23	24	23	20	22	22	21	18
		kW	2.02	2.06	2.13	2.19	2.17	2.22	2.28	2.36	2.30	2.35	2.42	2.50	2.42	2.47	2.55	2.63	2.52	2.57	2.65	2.74	2.60	2.66	2.74	2.83
		Amps	8.8	8.9	9.2	9.4	9.3	9.5	9.8	10.1	10.0	10.2	10.5	10.8	10.5	10.8	11.1	11.4	11.1	11.3	11.7	12.0	11.7	11.9	12.2	12.6
		Hi PR	223	240	254	265	251	270	285	297	285	307	324	338	325	349	369	385	365	393	415	433	403	434	458	478
		Lo PR	108	115	126	134	114	122	133	141	119	126	138	147	125	133	145	154	131	139	152	162	135	144	157	167

IDB: Entering Indoor Dry Bulb Temperature
High and low pressures are measured at the liquid and suction service valves.

Shaded area reflects AHRI (TVA) conditions.

kW = Total system power
Amps = outdoor unit amps (comp.+fan)

Expanded Cooling Data — GPC1336H41AA

			Outdoor Ambient Temperature																							
			65ºF				75ºF				85ºF				95ºF				105ºF				115ºF			
			Entering Indoor Wet Bulb Temperature																							
IDB	Airflow		59	63	67	71	59	63	67	71	59	63	67	71	59	63	67	71	59	63	67	71	59	63	67	71
70	1350	MBh	34.5	35.8	39.2	-	33.7	34.9	38.3	-	32.9	34.1	37.3	-	32.1	33.3	36.4	-	30.5	31.6	34.6	-	28.2	29.3	32.1	-
		S/T	0.74	0.62	0.43	-	0.77	0.64	0.45	-	0.79	0.66	0.46	-	0.82	0.68	0.47	-	0.85	0.71	0.49	-	0.85	0.71	0.49	-
		ΔT	17	15	11	-	18	15	12	-	18	15	12	-	18	15	12	-	18	15	12	-	16	14	11	-
		kW	2.53	2.59	2.66	-	2.72	2.78	2.86	-	2.89	2.95	3.04	-	3.03	3.10	3.20	-	3.16	3.23	3.33	-	3.26	3.34	3.44	-
		Amps	10.9	11.1	11.4	-	11.6	11.9	12.2	-	12.5	12.7	13.1	-	13.2	13.5	13.9	-	13.9	14.2	14.7	-	14.7	15.0	15.4	-
		Hi PR	241	260	274	-	271	291	308	-	308	331	350	-	351	377	399	-	395	425	448	-	436	469	495	-
		Lo PR	108	115	125	-	114	121	132	-	118	126	137	-	124	132	144	-	130	139	151	-	135	143	156	-
	1200	MBh	33.5	34.7	38.0	-	32.7	33.9	37.1	-	31.9	33.1	36.3	-	31.2	32.3	35.4	-	29.6	30.7	33.6	-	27.4	28.4	31.1	-
		S/T	0.71	0.59	0.41	-	0.73	0.61	0.43	-	0.75	0.63	0.44	-	0.78	0.65	0.45	-	0.81	0.67	0.47	-	0.81	0.68	0.47	-
		ΔT	18	16	12	-	18	16	12	-	18	16	12	-	19	16	12	-	18	16	12	-	17	15	11	-
		kW	2.52	2.57	2.64	-	2.70	2.76	2.84	-	2.86	2.93	3.02	-	3.01	3.07	3.17	-	3.13	3.20	3.30	-	3.24	3.31	3.42	-
		Amps	10.8	11.0	11.3	-	11.6	11.8	12.1	-	12.4	12.6	13.0	-	13.1	13.4	13.8	-	13.8	14.1	14.5	-	14.5	14.9	15.3	-
		Hi PR	239	257	271	-	268	288	305	-	305	328	346	-	347	374	395	-	391	420	444	-	432	464	490	-
		Lo PR	107	114	124	-	113	120	131	-	117	125	136	-	123	131	143	-	129	137	150	-	133	142	155	-
	1050	MBh	30.9	32.0	35.1	-	30.2	31.3	34.3	-	29.5	30.5	33.5	-	28.8	29.8	32.7	-	27.3	28.3	31.0	-	25.3	26.2	28.7	-
		S/T	0.68	0.57	0.40	-	0.71	0.59	0.41	-	0.73	0.61	0.42	-	0.75	0.63	0.43	-	0.78	0.65	0.45	-	0.78	0.66	0.45	-
		ΔT	18	16	12	-	19	16	12	-	19	16	12	-	19	16	12	-	19	16	12	-	17	15	11	-
		kW	2.46	2.51	2.58	-	2.64	2.69	2.77	-	2.80	2.86	2.94	-	2.94	3.00	3.09	-	3.06	3.12	3.22	-	3.16	3.23	3.33	-
		Amps	10.6	10.8	11.1	-	11.3	11.5	11.8	-	12.1	12.3	12.7	-	12.8	13.1	13.4	-	13.5	13.8	14.2	-	14.2	14.5	14.9	-
		Hi PR	232	249	263	-	260	280	295	-	296	318	336	-	337	362	383	-	379	408	431	-	419	451	476	-
		Lo PR	103	110	120	-	109	116	127	-	114	121	132	-	119	127	139	-	125	133	145	-	129	138	150	-
75	1350	MBh	35.1	36.1	39.1	42.0	34.3	35.3	38.2	41.0	33.4	34.4	37.3	40.0	32.6	33.6	36.4	39.0	31.0	31.9	34.5	37.1	28.7	29.6	32.0	34.3
		S/T	0.84	0.76	0.57	0.37	0.88	0.78	0.59	0.38	0.90	0.80	0.61	0.39	0.93	0.83	0.63	0.40	0.96	0.86	0.65	0.42	0.97	0.87	0.66	0.42
		ΔT	20	19	15	11	20	19	15	11	20	19	15	11	21	19	16	11	20	19	15	11	19	17	14	10
		kW	2.55	2.61	2.69	2.77	2.74	2.80	2.89	2.98	2.91	2.97	3.07	3.16	3.06	3.12	3.22	3.33	3.18	3.25	3.36	3.47	3.29	3.36	3.47	3.59
		Amps	11.0	11.2	11.5	11.9	11.7	12.0	12.3	12.7	12.6	12.8	13.2	13.6	13.3	13.6	14.0	14.4	14.1	14.4	14.8	15.3	14.8	15.1	15.5	16.1
		Hi PR	244	262	277	289	274	294	311	324	311	335	353	369	354	381	403	420	399	429	453	472	440	474	500	522
		Lo PR	109	116	126	135	115	122	134	142	120	127	139	148	126	134	146	155	132	140	153	163	136	145	158	168
	1200	MBh	34.1	35.1	38.0	40.7	33.3	34.2	37.1	39.8	32.5	33.4	36.2	38.8	31.7	**32.6**	35.3	37.9	30.1	31.0	33.5	36.0	27.9	28.7	31.1	33.3
		S/T	0.81	0.72	0.55	0.35	0.84	0.75	0.57	0.36	0.86	0.77	0.58	0.37	0.88	**0.79**	0.60	0.38	0.92	0.82	0.62	0.40	0.93	0.83	0.63	0.40
		ΔT	21	19	16	11	21	20	16	11	21	20	16	11	21	**20**	16	11	21	19	16	11	20	18	15	10
		kW	2.53	2.59	2.67	2.75	2.72	2.78	2.87	2.96	2.89	2.95	3.04	3.14	3.03	**3.10**	3.20	3.30	3.16	3.23	3.33	3.44	3.27	3.34	3.44	3.56
		Amps	10.9	11.1	11.4	11.8	11.6	11.9	12.2	12.6	12.5	12.7	13.1	13.5	13.2	**13.5**	13.9	14.3	13.9	14.2	14.7	15.1	14.7	15.0	15.4	15.9
		Hi PR	241	260	274	286	271	291	308	321	308	331	350	365	351	**377**	399	416	395	425	448	468	436	469	495	517
		Lo PR	108	115	125	133	114	121	132	141	118	126	137	146	124	**132**	144	154	130	139	151	161	135	143	157	167
	1050	MBh	31.4	32.4	35.0	37.6	30.7	31.6	34.2	36.7	30.0	30.9	33.4	35.8	29.2	30.1	32.6	35.0	27.8	28.6	31.0	33.2	25.7	26.5	28.7	30.8
		S/T	0.78	0.69	0.53	0.34	0.81	0.72	0.55	0.35	0.83	0.74	0.56	0.36	0.85	0.76	0.58	0.37	0.88	0.79	0.60	0.39	0.89	0.80	0.60	0.39
		ΔT	21	20	16	11	22	20	16	11	22	20	16	11	22	20	16	11	22	20	16	11	20	19	15	10
		kW	2.48	2.53	2.60	2.68	2.66	2.71	2.80	2.89	2.82	2.88	2.97	3.06	2.96	3.02	3.12	3.22	3.08	3.15	3.25	3.35	3.19	3.25	3.36	3.47
		Amps	10.7	10.9	11.2	11.5	11.4	11.6	11.9	12.3	12.2	12.4	12.8	13.2	12.9	13.2	13.5	14.0	13.6	13.9	14.3	14.8	14.3	14.6	15.0	15.5
		Hi PR	234	252	266	277	263	283	299	311	299	321	339	354	340	366	387	403	383	412	435	454	423	455	481	501
		Lo PR	105	111	121	129	110	118	128	137	115	122	133	142	121	128	140	149	126	134	147	156	131	139	152	162

IDB: Entering Indoor Dry Bulb Temperature

Shaded area reflects ACCA (TVA) conditions

kW = Total system power

High and low pressures are measured at the liquid and suction service valves.

Amps = outdoor unit amps (comp.+fan)

Expanded Cooling Data — GPC1336H41AA (cont.)

			Outdoor Ambient Temperature																							
			65ºF				75ºF				85ºF				95ºF				105ºF				115ºF			
			Entering Indoor Wet Bulb Temperature																							
IDB	Airflow		59	63	67	71	59	63	67	71	59	63	67	71	59	63	67	71	59	63	67	71	59	63	67	71
80	1350	MBh	35.7	36.5	39.0	41.7	34.9	35.6	38.1	40.7	34.0	34.8	37.2	39.7	33.2	33.9	36.3	38.8	31.5	32.2	34.4	36.8	29.2	29.9	31.9	34.1
		S/T	0.93	0.87	0.71	0.53	0.96	0.90	0.73	0.55	1.00	0.92	0.75	0.56	1.00	0.95	0.78	0.58	1.00	1.00	0.81	0.60	1.00	1.00	0.81	0.61
		ΔT	23	22	19	15	23	22	19	15	23	22	19	15	23	22	19	15	21	22	19	15	20	20	18	14
		kW	2.57	2.63	2.71	2.79	2.77	2.82	2.91	3.00	2.93	3.00	3.09	3.19	3.08	3.15	3.25	3.36	3.21	3.28	3.39	3.50	3.32	3.39	3.50	3.62
		Amps	11.1	11.3	11.6	12.0	11.8	12.1	12.4	12.8	12.7	12.9	13.3	13.7	13.4	13.7	14.1	14.6	14.2	14.5	14.9	15.4	14.9	15.2	15.7	16.2
		Hi PR	246	265	280	292	276	297	314	327	314	338	357	372	358	385	407	424	403	433	458	477	445	479	505	527
		Lo PR	110	117	128	136	116	124	135	144	121	128	140	149	127	135	147	157	133	141	154	164	137	146	160	170
	1200	MBh	34.7	35.4	37.8	40.5	33.9	34.6	37.0	39.5	33.0	33.8	36.1	38.6	32.2	32.9	**35.2**	37.6	30.6	31.3	33.4	35.7	28.4	29.0	31.0	33.1
		S/T	0.88	0.83	0.67	0.50	0.92	0.86	0.70	0.52	0.94	0.88	0.72	0.54	0.97	0.91	**0.74**	0.55	1.00	0.94	0.77	0.57	1.00	0.95	0.77	0.58
		ΔT	23	22	20	16	24	23	20	16	24	23	20	16	24	23	**20**	16	23	23	20	16	22	21	18	15
		kW	2.55	2.61	2.69	2.77	2.74	2.80	2.89	2.98	2.91	2.97	3.07	3.17	3.06	3.12	**3.22**	3.33	3.18	3.25	3.36	3.47	3.29	3.36	3.47	3.59
		Amps	11.0	11.2	11.5	11.9	11.7	12.0	12.3	12.7	12.6	12.8	13.2	13.6	13.3	13.6	**14.0**	14.4	14.1	14.4	14.8	15.3	14.8	15.1	15.5	16.1
		Hi PR	244	262	277	289	274	294	311	324	311	335	354	369	354	381	**403**	420	399	429	453	472	440	474	500	522
		Lo PR	109	116	126	135	115	122	134	142	120	127	139	148	126	134	**146**	155	132	140	153	163	136	145	158	168
	1050	MBh	32.0	32.7	34.9	37.3	31.2	31.9	34.1	36.5	30.5	31.2	33.3	35.6	29.8	30.4	32.5	34.7	28.3	28.9	30.9	33.0	26.2	26.8	28.6	30.6
		S/T	0.85	0.80	0.65	0.49	0.88	0.83	0.67	0.50	0.91	0.85	0.69	0.52	0.93	0.88	0.71	0.53	0.97	0.91	0.74	0.55	0.98	0.92	0.75	0.56
		ΔT	24	23	20	16	24	23	20	16	24	23	20	16	24	23	20	16	24	23	20	16	22	21	19	15
		kW	2.50	2.55	2.62	2.70	2.68	2.73	2.82	2.91	2.84	2.90	2.99	3.09	2.98	3.05	3.15	3.25	3.11	3.17	3.28	3.38	3.21	3.28	3.39	3.50
		Amps	10.7	11.0	11.3	11.6	11.5	11.7	12.0	12.4	12.3	12.5	12.9	13.3	13.0	13.3	13.7	14.1	13.7	14.0	14.4	14.9	14.4	14.7	15.2	15.7
		Hi PR	236	254	269	280	265	286	302	314	302	325	343	358	344	370	391	407	387	416	439	458	427	460	485	506
		Lo PR	106	112	123	131	112	119	130	138	116	123	135	143	122	130	141	151	128	136	148	158	132	140	153	163
85	1350	MBh	36.3	37.0	38.8	41.4	35.5	36.2	37.9	40.4	34.6	35.3	37.0	39.4	33.8	34.4	36.1	38.5	32.1	32.7	34.3	36.6	29.7	30.3	31.7	33.9
		S/T	0.97	0.94	0.85	0.69	1.00	0.97	0.88	0.71	1.00	1.00	0.90	0.73	1.00	1.00	0.93	0.75	1.00	1.00	0.96	0.78	1.00	1.00	0.97	0.79
		ΔT	24	24	22	19	24	24	23	20	24	24	23	20	23	23	23	20	22	22	22	19	20	21	21	18
		kW	2.59	2.65	2.73	2.81	2.79	2.85	2.93	3.03	2.96	3.02	3.12	3.22	3.11	3.18	3.28	3.38	3.24	3.31	3.41	3.53	3.35	3.42	3.53	3.65
		Amps	11.2	11.4	11.7	12.1	11.9	12.2	12.5	12.9	12.8	13.0	13.4	13.9	13.5	13.8	14.2	14.7	14.3	14.6	15.0	15.5	15.0	15.3	15.8	16.3
		Hi PR	249	268	283	295	279	300	317	331	317	342	361	376	361	389	411	428	407	438	462	482	449	483	511	533
		Lo PR	111	118	129	137	117	125	136	145	122	130	142	151	128	136	149	158	134	143	156	166	139	148	161	172
	1200	MBh	35.3	35.9	37.7	40.2	34.4	35.1	36.8	39.2	33.6	34.3	35.9	38.3	32.8	33.4	35.0	37.4	31.2	31.8	33.3	35.5	28.9	29.4	30.8	32.9
		S/T	0.93	0.89	0.81	0.65	0.96	0.93	0.84	0.68	0.98	0.95	0.86	0.70	1.00	0.98	0.89	0.72	1.00	1.00	0.92	0.75	1.00	1.00	0.93	0.75
		ΔT	25	25	23	20	25	25	24	20	25	25	24	20	25	25	24	21	24	24	23	20	22	23	22	19
		kW	2.57	2.63	2.71	2.79	2.77	2.82	2.91	3.00	2.93	3.00	3.09	3.19	3.08	3.15	3.25	3.36	3.21	3.28	3.39	3.50	3.32	3.39	3.50	3.62
		Amps	11.1	11.3	11.6	12.0	11.8	12.1	12.4	12.8	12.7	12.9	13.3	13.7	13.4	13.7	14.1	14.6	14.2	14.5	14.9	15.4	14.9	15.2	15.7	16.2
		Hi PR	246	265	280	292	276	297	314	327	314	338	357	372	358	385	407	424	403	433	458	477	445	479	505	527
		Lo PR	110	117	128	136	116	124	135	144	121	128	140	149	127	135	147	157	133	141	154	164	137	146	160	170
	1050	MBh	32.6	33.2	34.8	37.1	31.8	32.4	33.9	36.2	31.0	31.6	33.1	35.4	30.3	30.9	32.3	34.5	28.8	29.3	30.7	32.8	26.6	27.2	28.4	30.3
		S/T	0.89	0.86	0.78	0.63	0.93	0.89	0.81	0.65	0.95	0.92	0.83	0.67	0.98	0.95	0.85	0.69	1.00	0.98	0.89	0.72	1.00	0.99	0.89	0.72
		ΔT	25	25	24	20	26	25	24	21	26	25	24	21	26	26	24	21	25	25	24	21	23	24	22	19
		kW	2.51	2.57	2.64	2.73	2.70	2.76	2.84	2.93	2.86	2.92	3.02	3.11	3.01	3.07	3.17	3.27	3.13	3.20	3.30	3.41	3.24	3.31	3.42	3.53
		Amps	10.8	11.0	11.3	11.7	11.5	11.8	12.1	12.5	12.4	12.6	13.0	13.4	13.1	13.4	13.8	14.2	13.8	14.1	14.5	15.0	14.5	14.8	15.3	15.8
		Hi PR	239	257	271	283	268	288	305	318	305	328	346	361	347	374	394	411	391	420	444	463	431	464	490	511
		Lo PR	107	113	124	132	113	120	131	139	117	125	136	145	123	131	143	152	129	137	150	159	133	142	155	165

IDB: Entering Indoor Dry Bulb Temperature

Shaded area reflects AHRI (TVA) conditions.

kW = Total system power

High and low pressures are measured at the liquid and suction service valves.

Amps = outdoor unit amps (comp.+fan)

Expanded Cooling Data — GPC1336H41AC

			Outdoor Ambient Temperature																							
			65ºF				75ºF				85ºF				95ºF				105ºF				115ºF			
			Entering Indoor Wet Bulb Temperature																							
IDB	Airflow		59	63	67	71	59	63	67	71	59	63	67	71	59	63	67	71	59	63	67	71	59	63	67	71
70	1350	MBh	34.5	35.8	39.2	-	33.7	34.9	38.3	-	32.9	34.1	37.3	-	32.1	33.3	36.4	-	30.5	31.6	34.6	-	28.2	29.3	32.1	-
		S/T	0.74	0.62	0.43	-	0.77	0.64	0.45	-	0.79	0.66	0.46	-	0.82	0.68	0.47	-	0.85	0.71	0.49	-	0.85	0.71	0.49	-
		ΔT	17	15	11	-	18	15	12	-	18	15	12	-	18	15	12	-	18	15	12	-	16	14	11	-
		kW	2.53	2.59	2.66	-	2.72	2.78	2.86	-	2.89	2.95	3.04	-	3.03	3.10	3.20	-	3.16	3.23	3.33	-	3.26	3.34	3.44	-
		Amps	10.9	11.1	11.4	-	11.6	11.9	12.2	-	12.5	12.7	13.1	-	13.2	13.5	13.9	-	13.9	14.2	14.7	-	14.7	15.0	15.4	-
		HI PR	241	260	274	-	271	291	308	-	308	331	350	-	351	377	399	-	395	425	448	-	436	469	495	-
		LO PR	108	115	125	-	114	121	132	-	118	126	137	-	124	132	144	-	130	139	151	-	135	143	156	-
	1200	MBh	33.5	34.7	38.0	-	32.7	33.9	37.1	-	31.9	33.1	36.3	-	31.2	32.3	35.4	-	29.6	30.7	33.6	-	27.4	28.4	31.1	-
		S/T	0.71	0.59	0.41	-	0.73	0.61	0.43	-	0.75	0.63	0.44	-	0.78	0.65	0.45	-	0.81	0.67	0.47	-	0.81	0.68	0.47	-
		ΔT	18	16	12	-	18	16	12	-	18	16	12	-	19	16	12	-	18	16	12	-	17	15	11	-
		kW	2.52	2.57	2.64	-	2.70	2.76	2.84	-	2.86	2.93	3.02	-	3.01	3.07	3.17	-	3.13	3.20	3.30	-	3.24	3.31	3.42	-
		Amps	10.8	11.0	11.3	-	11.6	11.8	12.1	-	12.4	12.6	13.0	-	13.1	13.4	13.8	-	13.8	14.1	14.5	-	14.5	14.9	15.3	-
		HI PR	239	257	271	-	268	288	305	-	305	328	346	-	347	374	395	-	391	420	444	-	432	464	490	-
		LO PR	107	114	124	-	113	120	131	-	117	125	136	-	123	131	143	-	129	137	150	-	133	142	155	-
	1050	MBh	30.9	32.0	35.1	-	30.2	31.3	34.3	-	29.5	30.5	33.5	-	28.8	29.8	32.7	-	27.3	28.3	31.0	-	25.3	26.2	28.7	-
		S/T	0.68	0.57	0.40	-	0.71	0.59	0.41	-	0.73	0.61	0.42	-	0.75	0.63	0.43	-	0.78	0.65	0.45	-	0.78	0.66	0.45	-
		ΔT	18	16	12	-	19	16	12	-	19	16	12	-	19	16	12	-	19	16	12	-	17	15	11	-
		kW	2.46	2.51	2.58	-	2.64	2.69	2.77	-	2.80	2.86	2.94	-	2.94	3.00	3.09	-	3.06	3.12	3.22	-	3.16	3.23	3.33	-
		Amps	10.6	10.8	11.1	-	11.3	11.5	11.8	-	12.1	12.3	12.7	-	12.8	13.1	13.4	-	13.5	13.8	14.2	-	14.2	14.5	14.9	-
		HI PR	232	249	263	-	260	280	295	-	296	318	336	-	337	362	383	-	379	408	431	-	419	451	476	-
		LO PR	103	110	120	-	109	116	127	-	114	121	132	-	119	127	139	-	125	133	145	-	129	138	150	-
75	1350	MBh	35.1	36.1	39.1	42.0	34.3	35.3	38.2	41.0	33.4	34.4	37.3	40.0	32.6	**33.6**	36.4	39.0	31.0	31.9	34.5	37.1	28.7	29.6	32.0	34.3
		S/T	0.84	0.76	0.57	0.37	0.88	0.78	0.59	0.38	0.90	0.80	0.61	0.39	0.93	**0.83**	0.63	0.40	0.96	0.86	0.65	0.42	0.97	0.87	0.66	0.42
		ΔT	20	19	15	11	20	19	15	11	20	19	15	11	21	**19**	16	11	20	19	15	11	19	17	14	10
		kW	2.55	2.61	2.69	2.77	2.74	2.80	2.89	2.98	2.91	2.97	3.07	3.16	3.06	**3.12**	3.22	3.33	3.18	3.25	3.36	3.47	3.29	3.36	3.47	3.59
		Amps	11.0	11.2	11.5	11.9	11.7	12.0	12.3	12.7	12.6	12.8	13.2	13.6	13.3	**13.6**	14.0	14.4	14.1	14.4	14.8	15.3	14.8	15.1	15.5	16.1
		HI PR	244	262	277	289	274	294	311	324	311	335	353	369	354	**381**	403	420	399	429	453	472	440	474	500	522
		LO PR	109	116	126	135	115	122	134	142	120	127	139	148	126	**134**	146	155	132	140	153	163	136	145	158	168
	1200	MBh	34.1	35.1	38.0	40.7	33.3	34.2	37.1	39.8	32.5	33.4	36.2	38.8	31.7	**32.6**	35.3	37.9	30.1	31.0	33.5	36.0	27.9	28.7	31.1	33.3
		S/T	0.81	0.72	0.55	0.35	0.84	0.75	0.57	0.36	0.86	0.77	0.58	0.37	0.88	**0.79**	0.60	0.38	0.92	0.82	0.62	0.40	0.93	0.83	0.63	0.40
		ΔT	21	19	16	11	21	20	16	11	21	20	16	11	21	**20**	16	11	21	19	16	11	20	18	15	10
		kW	2.53	2.59	2.67	2.75	2.72	2.78	2.87	2.96	2.89	2.95	3.04	3.14	3.03	**3.10**	3.20	3.30	3.16	3.23	3.33	3.44	3.27	3.34	3.44	3.56
		Amps	10.9	11.1	11.4	11.8	11.6	11.9	12.2	12.6	12.5	12.7	13.1	13.5	13.2	**13.5**	13.9	14.3	13.9	14.2	14.7	15.1	14.7	15.0	15.4	15.9
		HI PR	241	260	274	286	271	291	308	321	308	331	350	365	351	**377**	399	416	395	425	448	468	436	469	495	517
		LO PR	108	115	125	133	114	121	132	141	118	126	137	146	124	**132**	144	154	130	139	151	161	135	143	157	167
	1050	MBh	31.4	32.4	35.0	37.6	30.7	31.6	34.2	36.7	30.0	30.9	33.4	35.8	29.2	**30.1**	32.6	35.0	27.8	28.6	31.0	33.2	25.7	26.5	28.7	30.8
		S/T	0.78	0.69	0.53	0.34	0.81	0.72	0.55	0.35	0.83	0.74	0.56	0.36	0.85	**0.76**	0.58	0.37	0.88	0.79	0.60	0.39	0.89	0.80	0.60	0.39
		ΔT	21	20	16	11	22	20	16	11	22	20	16	11	22	**20**	16	11	22	20	16	11	20	19	15	10
		kW	2.48	2.53	2.60	2.68	2.66	2.71	2.80	2.89	2.82	2.88	2.97	3.06	2.96	**3.02**	3.12	3.22	3.08	3.15	3.25	3.35	3.19	3.25	3.36	3.47
		Amps	10.7	10.9	11.2	11.5	11.4	11.6	11.9	12.3	12.2	12.4	12.8	13.2	12.9	**13.2**	13.5	14.0	13.6	13.9	14.3	14.8	14.3	14.6	15.0	15.5
		HI PR	234	252	266	277	263	283	299	311	299	321	339	354	340	**366**	387	403	383	412	435	454	423	455	481	501
		LO PR	105	111	121	129	110	118	128	137	115	122	133	142	121	**128**	140	149	126	134	147	156	131	139	152	162

IDB: Entering Indoor Dry Bulb Temperature
High and low pressures are measured at the liquid and suction service valves.

Shaded area reflects ACCA (TVA) conditions

kW = Total system power
Amps = outdoor unit amps (comp.+fan)

Expanded Cooling Data — GPC1336H41AC (cont.)

			Outdoor Ambient Temperature																							
			65ºF				75ºF				85ºF				95ºF				105ºF				115ºF			
			Entering Indoor Wet Bulb Temperature																							
IDB	Airflow		59	63	67	71	59	63	67	71	59	63	67	71	59	63	67	71	59	63	67	71	59	63	67	71
80	1350	MBh	35.7	36.5	39.0	41.7	34.9	35.6	38.1	40.7	34.0	34.8	37.2	39.7	33.2	33.9	36.3	38.8	31.5	32.2	34.4	36.8	29.2	29.9	31.9	34.1
		S/T	0.93	0.87	0.71	0.53	0.96	0.90	0.73	0.55	1.00	0.92	0.75	0.56	1.00	0.95	0.78	0.58	1.00	1.00	0.81	0.60	1.00	1.00	0.81	0.61
		ΔT	23	22	19	15	23	22	19	15	23	22	19	15	23	22	19	15	21	22	19	15	20	20	18	14
		kW	2.57	2.63	2.71	2.79	2.77	2.82	2.91	3.00	2.93	3.00	3.09	3.19	3.08	3.15	3.25	3.36	3.21	3.28	3.39	3.50	3.32	3.39	3.50	3.62
		Amps	11.1	11.3	11.6	12.0	11.8	12.1	12.4	12.8	12.7	12.9	13.3	13.7	13.4	13.7	14.1	14.6	14.2	14.5	14.9	15.4	14.9	15.2	15.7	16.2
		HI PR	246	265	280	292	276	297	314	327	314	338	357	372	358	385	407	424	403	433	458	477	445	479	505	527
		LO PR	110	117	128	136	116	124	135	144	121	128	140	149	127	135	147	157	133	141	154	164	137	146	160	170
	1200	MBh	34.7	35.4	37.8	40.5	33.9	34.6	37.0	39.5	33.0	33.8	36.1	38.6	32.2	32.9	**35.2**	37.6	30.6	31.3	33.4	35.7	28.4	29.0	31.0	33.1
		S/T	0.88	0.83	0.67	0.50	0.92	0.86	0.70	0.52	0.94	0.88	0.72	0.54	0.97	0.91	**0.74**	0.55	1.00	0.94	0.77	0.57	1.00	0.95	0.77	0.58
		ΔT	23	22	20	16	24	23	20	16	24	23	20	16	24	23	**20**	16	23	23	20	16	22	21	18	15
		kW	2.55	2.61	2.69	2.77	2.74	2.80	2.89	2.98	2.91	2.97	3.07	3.17	3.06	3.12	**3.22**	3.33	3.18	3.25	3.36	3.47	3.29	3.36	3.47	3.59
		Amps	11.0	11.2	11.5	11.9	11.7	12.0	12.3	12.7	12.6	12.8	13.2	13.6	13.3	13.6	**14.0**	14.4	14.1	14.4	14.8	15.3	14.8	15.1	15.5	16.1
		HI PR	244	262	277	289	274	294	311	324	311	335	354	369	354	381	**403**	420	399	429	453	472	440	474	500	522
		LO PR	109	116	126	135	115	122	134	142	120	127	139	148	126	134	**146**	155	132	140	153	163	136	145	158	168
	1050	MBh	32.0	32.7	34.9	37.3	31.2	31.9	34.1	36.5	30.5	31.2	33.3	35.6	29.8	30.4	32.5	34.7	28.3	28.9	30.9	33.0	26.2	26.8	28.6	30.6
		S/T	0.85	0.80	0.65	0.49	0.88	0.83	0.67	0.50	0.91	0.85	0.69	0.52	0.93	0.88	0.71	0.53	0.97	0.91	0.74	0.55	0.98	0.92	0.75	0.56
		ΔT	24	23	20	16	24	23	20	16	24	23	20	16	24	23	20	16	24	23	20	16	22	21	19	15
		kW	2.50	2.55	2.62	2.70	2.68	2.73	2.82	2.91	2.84	2.90	2.99	3.09	2.98	3.05	3.15	3.25	3.11	3.17	3.28	3.38	3.21	3.28	3.39	3.50
		Amps	10.7	11.0	11.3	11.6	11.5	11.7	12.0	12.4	12.3	12.5	12.9	13.3	13.0	13.3	13.7	14.1	13.7	14.0	14.4	14.9	14.4	14.7	15.2	15.7
		HI PR	236	254	269	280	265	286	302	314	302	325	343	358	344	370	391	407	387	416	439	458	427	460	485	506
		LO PR	106	112	123	131	112	119	130	138	116	123	135	143	122	130	141	151	128	136	148	158	132	140	153	163
85	1350	MBh	36.3	37.0	38.8	41.4	35.5	36.2	37.9	40.4	34.6	35.3	37.0	39.4	33.8	34.4	36.1	38.5	32.1	32.7	34.3	36.6	29.7	30.3	31.7	33.9
		S/T	0.97	0.94	0.85	0.69	1.00	0.97	0.88	0.71	1.00	1.00	0.90	0.73	1.00	1.00	0.93	0.75	1.00	1.00	0.96	0.78	1.00	1.00	0.97	0.79
		ΔT	24	24	22	19	24	24	23	20	24	24	23	20	23	23	23	20	22	22	22	19	20	21	21	18
		kW	2.59	2.65	2.73	2.81	2.79	2.85	2.93	3.03	2.96	3.02	3.12	3.22	3.11	3.18	3.28	3.38	3.24	3.31	3.41	3.53	3.35	3.42	3.53	3.65
		Amps	11.2	11.4	11.7	12.1	11.9	12.2	12.5	12.9	12.8	13.0	13.4	13.9	13.5	13.8	14.2	14.7	14.3	14.6	15.0	15.5	15.0	15.3	15.8	16.3
		HI PR	249	268	283	295	279	300	317	331	317	342	361	376	361	389	411	428	407	438	462	482	449	483	511	533
		LO PR	111	118	129	137	117	125	136	145	122	130	142	151	128	136	149	158	134	143	156	166	139	148	161	172
	1200	MBh	35.3	35.9	37.7	40.2	34.4	35.1	36.8	39.2	33.6	34.3	35.9	38.3	32.8	33.4	35.0	37.4	31.2	31.8	33.3	35.5	28.9	29.4	30.8	32.9
		S/T	0.93	0.89	0.81	0.65	0.96	0.93	0.84	0.68	0.98	0.95	0.86	0.70	1.00	0.98	0.89	0.72	1.00	1.00	0.92	0.75	1.00	1.00	0.93	0.75
		ΔT	25	25	23	20	25	25	24	20	25	25	24	20	25	25	24	21	24	24	23	20	22	23	22	19
		kW	2.57	2.63	2.71	2.79	2.77	2.82	2.91	3.00	2.93	3.00	3.09	3.19	3.08	3.15	3.25	3.36	3.21	3.28	3.39	3.50	3.32	3.39	3.50	3.62
		Amps	11.1	11.3	11.6	12.0	11.8	12.1	12.4	12.8	12.7	12.9	13.3	13.7	13.4	13.7	14.1	14.6	14.2	14.5	14.9	15.4	14.9	15.2	15.7	16.2
		HI PR	246	265	280	292	276	297	314	327	314	338	357	372	358	385	407	424	403	433	458	477	445	479	505	527
		LO PR	110	117	128	136	116	124	135	144	121	128	140	149	127	135	147	157	133	141	154	164	137	146	160	170
	1050	MBh	32.6	33.2	34.8	37.1	31.8	32.4	33.9	36.2	31.0	31.6	33.1	35.4	30.3	30.9	32.3	34.5	28.8	29.3	30.7	32.8	26.6	27.2	28.4	30.3
		S/T	0.89	0.86	0.78	0.63	0.93	0.89	0.81	0.65	0.95	0.92	0.83	0.67	0.98	0.95	0.85	0.69	1.00	0.98	0.89	0.72	1.00	0.99	0.89	0.72
		ΔT	25	25	24	20	26	25	24	21	26	25	24	21	26	26	24	21	25	25	24	21	23	24	22	19
		kW	2.51	2.57	2.64	2.73	2.70	2.76	2.84	2.93	2.86	2.92	3.02	3.11	3.01	3.07	3.17	3.27	3.13	3.20	3.30	3.41	3.24	3.31	3.42	3.53
		Amps	10.8	11.0	11.3	11.7	11.5	11.8	12.1	12.5	12.4	12.6	13.0	13.4	13.1	13.4	13.8	14.2	13.8	14.1	14.5	15.0	14.5	14.8	15.3	15.8
		HI PR	239	257	271	283	268	288	305	318	305	328	346	361	347	374	394	411	391	420	444	463	431	464	490	511
		LO PR	107	113	124	132	113	120	131	139	117	125	136	145	123	131	143	152	129	137	150	159	133	142	155	165

IDB: Entering Indoor Dry Bulb Temperature
High and low pressures are measured at the liquid and suction service valves.

Shaded area reflects AHRI (TVA) conditions.

kW = Total system power
Amps = outdoor unit amps (comp.+fan)

Expanded Cooling Data — GPC1342H41AA

			Outdoor Ambient Temperature																							
			65ºF				75ºF				85ºF				95ºF				105ºF				115ºF			
			Entering Indoor Wet Bulb Temperature																							
IDB	Airflow		59	63	67	71	59	63	67	71	59	63	67	71	59	63	67	71	59	63	67	71	59	63	67	71
70	1580	MBh	40.2	41.6	45.6	-	39.2	40.7	44.6	-	38.3	39.7	43.5	-	37.4	38.7	42.4	-	35.5	36.8	40.3	-	32.9	34.1	37.3	-
		S/T	0.77	0.65	0.45	-	0.80	0.67	0.46	-	0.82	0.69	0.48	-	0.85	0.71	0.49	-	0.88	0.74	0.51	-	0.89	0.74	0.51	-
		ΔT	18	16	12	-	18	16	12	-	18	16	12	-	18	16	12	-	18	16	12	-	17	15	11	-
		kW	2.77	2.83	2.91	-	2.97	3.03	3.12	-	3.14	3.20	3.30	-	3.29	3.36	3.46	-	3.42	3.49	3.60	-	3.53	3.60	3.72	-
		Amps	12.3	12.5	12.9	-	13.1	13.4	13.7	-	14.0	14.3	14.7	-	14.8	15.1	15.6	-	15.6	16.0	16.4	-	16.4	16.8	17.3	-
		Hi PR	225	242	256	-	252	272	287	-	287	309	326	-	327	352	372	-	368	396	418	-	406	437	462	-
		Lo PR	110	117	128	-	117	124	135	-	121	129	141	-	127	135	148	-	133	142	155	-	138	147	160	-
	1410	MBh	39.0	40.4	44.3	-	38.1	39.5	43.3	-	37.2	38.5	42.2	-	36.3	37.6	41.2	-	34.5	35.7	39.1	-	31.9	33.1	36.3	-
		S/T	0.74	0.62	0.43	-	0.77	0.64	0.44	-	0.78	0.66	0.45	-	0.81	0.68	0.47	-	0.84	0.70	0.49	-	0.85	0.71	0.49	-
		ΔT	19	16	12	-	19	16	12	-	19	16	12	-	19	17	13	-	19	16	12	-	18	15	12	-
		kW	2.75	2.81	2.89	-	2.95	3.00	3.09	-	3.12	3.18	3.27	-	3.27	3.33	3.43	-	3.39	3.46	3.57	-	3.50	3.58	3.69	-
		Amps	12.2	12.5	12.8	-	13.0	13.3	13.6	-	13.9	14.2	14.6	-	14.7	15.0	15.4	-	15.5	15.8	16.3	-	16.3	16.6	17.1	-
		Hi PR	223	240	253	-	250	269	284	-	284	306	323	-	324	348	368	-	364	392	414	-	402	433	457	-
		Lo PR	109	116	127	-	115	123	134	-	120	128	139	-	126	134	146	-	132	140	153	-	137	145	159	-
	1240	MBh	36.0	37.3	40.9	-	35.2	36.4	39.9	-	34.3	35.6	39.0	-	33.5	34.7	38.0	-	31.8	33.0	36.1	-	29.5	30.5	33.5	-
		S/T	0.71	0.59	0.41	-	0.74	0.62	0.43	-	0.76	0.63	0.44	-	0.78	0.65	0.45	-	0.81	0.68	0.47	-	0.82	0.68	0.47	-
		ΔT	19	16	12	-	19	17	13	-	19	17	13	-	19	17	13	-	19	17	13	-	18	15	12	-
		kW	2.69	2.74	2.82	-	2.88	2.94	3.02	-	3.04	3.11	3.20	-	3.19	3.25	3.35	-	3.31	3.38	3.49	-	3.42	3.49	3.60	-
		Amps	12.0	12.2	12.5	-	12.7	13.0	13.3	-	13.6	13.9	14.3	-	14.4	14.7	15.1	-	15.2	15.5	15.9	-	15.9	16.2	16.7	-
		Hi PR	216	233	246	-	242	261	275	-	276	297	313	-	314	338	357	-	353	380	401	-	390	420	444	-
		Lo PR	106	113	123	-	112	119	130	-	116	124	135	-	122	130	142	-	128	136	149	-	132	141	154	-
75	1580	MBh	40.9	42.1	45.5	48.9	39.9	41.1	44.5	47.7	39.0	40.1	43.4	46.6	38.0	39.1	42.4	45.5	36.1	37.2	40.2	43.2	33.4	34.4	37.3	40.0
		S/T	0.88	0.79	0.60	0.38	0.91	0.82	0.62	0.40	0.94	0.84	0.63	0.41	0.97	0.86	0.65	0.42	1.00	0.90	0.68	0.44	1.00	0.90	0.68	0.44
		ΔT	21	19	16	11	21	20	16	11	21	20	16	11	21	20	16	11	21	19	16	11	19	18	15	10
		kW	2.79	2.85	2.93	3.02	2.99	3.05	3.14	3.23	3.16	3.23	3.32	3.43	3.32	3.38	3.49	3.60	3.45	3.52	3.63	3.74	3.56	3.63	3.75	3.87
		Amps	12.4	12.6	13.0	13.4	13.2	13.5	13.8	14.3	14.1	14.4	14.8	15.3	15.0	15.3	15.7	16.2	15.8	16.1	16.5	17.1	16.6	16.9	17.4	18.0
		Hi PR	227	245	258	269	255	274	290	302	290	312	330	344	330	355	375	392	372	400	422	440	411	442	467	487
		Lo PR	111	119	129	138	118	125	137	146	122	130	142	151	128	137	149	159	135	143	156	167	139	148	162	172
	1410	MBh	39.7	40.8	44.2	47.4	38.7	39.9	43.2	46.3	37.8	38.9	42.2	45.2	36.9	**38.0**	41.1	44.1	35.1	36.1	39.1	41.9	32.5	33.4	36.2	38.8
		S/T	0.84	0.75	0.57	0.37	0.87	0.78	0.59	0.38	0.89	0.80	0.60	0.39	0.92	**0.82**	0.62	0.40	0.96	0.85	0.65	0.42	0.96	0.86	0.65	0.42
		ΔT	22	20	16	11	22	20	17	11	22	20	17	11	22	**20**	17	12	22	20	16	11	20	19	15	11
		kW	2.77	2.83	2.91	2.99	2.97	3.03	3.12	3.21	3.14	3.20	3.30	3.40	3.29	**3.36**	3.46	3.57	3.42	3.49	3.60	3.71	3.53	3.60	3.72	3.84
		Amps	12.3	12.6	12.9	13.3	13.1	13.4	13.7	14.2	14.0	14.3	14.7	15.2	14.8	**15.1**	15.6	16.1	15.6	16.0	16.4	17.0	16.4	16.8	17.3	17.8
		Hi PR	225	242	256	267	252	272	287	299	287	309	326	340	327	**352**	372	388	368	396	418	436	407	437	462	482
		Lo PR	110	117	128	136	117	124	135	144	121	129	141	150	127	**135**	148	157	133	142	155	165	138	147	160	171
	1240	MBh	36.6	37.7	40.8	43.8	35.8	36.8	39.9	42.8	34.9	35.9	38.9	41.8	34.1	35.1	38.0	40.7	32.4	33.3	36.1	38.7	30.0	30.9	33.4	35.8
		S/T	0.81	0.72	0.55	0.35	0.84	0.75	0.57	0.37	0.86	0.77	0.58	0.37	0.89	0.79	0.60	0.39	0.92	0.82	0.62	0.40	0.93	0.83	0.63	0.40
		ΔT	22	20	17	11	22	20	17	12	22	20	17	12	22	21	17	12	22	20	17	12	21	19	16	11
		kW	2.71	2.76	2.84	2.93	2.90	2.96	3.04	3.14	3.07	3.13	3.22	3.32	3.22	3.28	3.38	3.48	3.34	3.41	3.51	3.62	3.45	3.52	3.63	3.74
		Amps	12.0	12.3	12.6	13.0	12.8	13.1	13.4	13.8	13.7	14.0	14.4	14.8	14.5	14.8	15.2	15.7	15.3	15.6	16.0	16.5	16.0	16.4	16.8	17.4
		Hi PR	218	235	248	259	245	264	278	290	279	300	317	330	317	341	360	376	357	384	406	423	394	424	448	467
		Lo PR	107	114	124	132	113	120	131	140	117	125	136	145	123	131	143	153	129	138	150	160	134	142	155	165

IDB: Entering Indoor Dry Bulb Temperature

Shaded area reflects ACCA (TVA) conditions

kW = Total system power

High and low pressures are measured at the liquid and suction service valves.

Amps = outdoor unit amps (comp.+fan)

Expanded Cooling Data — GPC1342H41AA (cont.)

			Outdoor Ambient Temperature																							
			65ºF				75ºF				85ºF				95ºF				105ºF				115ºF			
			Entering Indoor Wet Bulb Temperature																							
IDB	Airflow		59	63	67	71	59	63	67	71	59	63	67	71	59	63	67	71	59	63	67	71	59	63	67	71
80	1580	MBh	41.6	42.5	45.4	48.5	40.6	41.5	44.3	47.4	39.6	40.5	43.3	46.3	38.7	39.5	42.2	45.1	36.7	37.6	40.1	42.9	34.0	34.8	37.2	39.7
		S/T	0.97	0.91	0.74	0.55	1.00	0.94	0.76	0.57	1.00	0.96	0.78	0.59	1.00	1.00	0.81	0.60	1.00	1.00	0.84	0.63	1.00	1.00	0.85	0.63
		ΔT	23	22	19	16	24	23	20	16	23	23	20	16	23	23	20	16	21	22	20	16	20	20	18	15
		kW	2.81	2.87	2.95	3.04	3.01	3.07	3.16	3.26	3.19	3.25	3.35	3.45	3.34	3.41	3.52	3.63	3.47	3.55	3.66	3.77	3.59	3.66	3.78	3.90
		Amps	12.5	12.7	13.1	13.5	13.3	13.6	13.9	14.4	14.3	14.5	14.9	15.4	15.1	15.4	15.8	16.3	15.9	16.2	16.7	17.2	16.7	17.0	17.5	18.1
		Hi PR	230	247	261	272	258	277	293	305	293	315	333	347	334	359	379	395	375	404	427	445	415	446	471	492
		Lo PR	113	120	131	139	119	126	138	147	124	131	144	153	130	138	151	161	136	145	158	168	141	150	163	174
	1410	MBh	40.4	41.3	44.1	47.1	39.4	40.3	43.1	46.0	38.5	39.3	42.0	44.9	37.6	38.4	**41.0**	43.8	35.7	36.5	39.0	41.6	33.0	33.8	36.1	38.6
		S/T	0.92	0.86	0.70	0.53	0.95	0.89	0.73	0.54	0.98	0.92	0.75	0.56	1.00	0.95	**0.77**	0.58	1.00	0.98	0.80	0.60	1.00	0.99	0.81	0.60
		ΔT	24	23	20	16	25	24	20	16	25	24	20	16	24	24	**21**	16	23	23	20	16	22	22	19	15
		kW	2.79	2.85	2.93	3.02	2.99	3.05	3.14	3.23	3.16	3.23	3.32	3.43	3.32	3.38	**3.49**	3.60	3.45	3.52	3.63	3.74	3.56	3.63	3.75	3.87
		Amps	12.4	12.6	13.0	13.4	13.2	13.5	13.8	14.3	14.1	14.4	14.8	15.3	15.0	15.3	**15.7**	16.2	15.8	16.1	16.5	17.1	16.6	16.9	17.4	18.0
		Hi PR	227	245	258	269	255	274	290	302	290	312	330	344	330	356	**375**	392	372	400	422	440	411	442	467	487
		Lo PR	111	119	129	138	118	125	137	146	122	130	142	151	129	137	**149**	159	135	143	156	167	139	148	162	172
	1240	MBh	37.3	38.1	40.7	43.5	36.4	37.2	39.7	42.5	35.5	36.3	38.8	41.5	34.7	35.4	37.8	40.5	32.9	33.6	36.0	38.4	30.5	31.2	33.3	35.6
		S/T	0.89	0.83	0.68	0.51	0.92	0.86	0.70	0.52	0.94	0.88	0.72	0.54	0.97	0.91	0.74	0.56	1.01	0.95	0.77	0.58	1.02	0.96	0.78	0.58
		ΔT	25	23	20	16	25	24	21	17	25	24	21	17	25	24	21	17	25	24	21	16	23	22	19	15
		kW	2.73	2.78	2.86	2.95	2.92	2.98	3.07	3.16	3.09	3.15	3.25	3.35	3.24	3.31	3.41	3.51	3.37	3.44	3.54	3.65	3.48	3.55	3.66	3.77
		Amps	12.1	12.4	12.7	13.1	12.9	13.2	13.5	13.9	13.8	14.1	14.5	14.9	14.6	14.9	15.3	15.8	15.4	15.7	16.2	16.7	16.2	16.5	17.0	17.5
		Hi PR	220	237	251	261	247	266	281	293	281	303	320	333	320	345	364	380	360	388	410	427	398	429	453	472
		Lo PR	108	115	126	134	114	121	133	141	119	126	138	147	125	133	145	154	131	139	152	162	135	144	157	167
85	1580	MBh	42.3	43.1	45.2	48.2	41.3	42.1	44.1	47.1	40.3	41.1	43.1	45.9	39.4	40.1	42.0	44.8	37.4	38.1	39.9	42.6	34.6	35.3	37.0	39.4
		S/T	1.00	0.98	0.88	0.71	1.00	1.00	0.91	0.74	1.00	1.00	0.94	0.76	1.00	1.00	0.97	0.78	1.00	1.00	1.00	0.81	1.00	1.00	1.00	0.82
		ΔT	25	24	23	20	24	25	23	20	23	24	23	20	23	23	24	20	22	22	23	20	20	21	22	19
		kW	2.83	2.89	2.97	3.06	3.03	3.09	3.19	3.28	3.21	3.28	3.38	3.48	3.37	3.44	3.54	3.65	3.50	3.57	3.68	3.80	3.62	3.69	3.81	3.93
		Amps	12.6	12.8	13.2	13.6	13.4	13.7	14.0	14.5	14.4	14.7	15.1	15.5	15.2	15.5	15.9	16.4	16.0	16.3	16.8	17.4	16.8	17.2	17.7	18.3
		Hi PR	232	250	263	275	260	280	296	308	296	318	336	351	337	363	383	399	379	408	431	449	419	451	476	496
		Lo PR	114	121	132	141	120	128	139	149	125	133	145	154	131	139	152	162	137	146	160	170	142	151	165	176
	1410	MBh	41.1	41.9	43.9	46.8	40.1	40.9	42.8	45.7	39.2	39.9	41.8	44.6	38.2	39.0	40.8	43.5	36.3	37.0	38.8	41.3	33.6	34.3	35.9	38.3
		S/T	0.96	0.93	0.84	0.68	1.00	0.96	0.87	0.71	1.00	0.99	0.89	0.72	1.00	1.00	0.92	0.75	1.00	1.00	0.96	0.78	1.00	1.00	0.96	0.78
		ΔT	26	25	24	21	26	26	24	21	26	26	24	21	25	25	25	21	24	24	24	21	22	22	23	20
		kW	2.81	2.87	2.95	3.04	3.01	3.07	3.16	3.26	3.19	3.25	3.35	3.45	3.34	3.41	3.52	3.63	3.47	3.55	3.66	3.77	3.59	3.66	3.78	3.90
		Amps	12.5	12.7	13.1	13.5	13.3	13.6	13.9	14.4	14.3	14.5	14.9	15.4	15.1	15.4	15.8	16.3	15.9	16.2	16.7	17.2	16.7	17.0	17.5	18.1
		Hi PR	230	247	261	272	258	277	293	305	293	315	333	347	334	359	379	395	375	404	427	445	415	446	471	492
		Lo PR	113	120	131	139	119	126	138	147	124	131	144	153	130	138	151	161	136	145	158	168	141	150	163	174
	1240	MBh	37.9	38.6	40.5	43.2	37.0	37.7	39.5	42.2	36.2	36.9	38.6	41.2	35.3	36.0	37.7	40.2	33.5	34.2	35.8	38.2	31.0	31.6	33.1	35.4
		S/T	0.93	0.90	0.81	0.66	0.96	0.93	0.84	0.68	0.99	0.95	0.86	0.70	1.00	0.98	0.89	0.72	1.00	1.00	0.92	0.75	1.00	1.00	0.93	0.75
		ΔT	26	26	24	21	26	26	25	21	27	26	25	21	26	26	25	21	25	25	24	21	23	23	23	20
		kW	2.75	2.80	2.89	2.97	2.94	3.00	3.09	3.18	3.11	3.18	3.27	3.37	3.26	3.33	3.43	3.54	3.39	3.46	3.57	3.68	3.50	3.58	3.69	3.80
		Amps	12.2	12.5	12.8	13.2	13.0	13.3	13.6	14.0	13.9	14.2	14.6	15.1	14.7	15.0	15.4	15.9	15.5	15.8	16.3	16.8	16.3	16.6	17.1	17.7
		Hi PR	223	240	253	264	250	269	284	296	284	306	323	337	324	348	368	384	364	392	414	432	402	433	457	477
		Lo PR	109	116	127	135	115	123	134	143	120	128	139	148	126	134	146	156	132	140	153	163	136	145	159	169

IDB: Entering Indoor Dry Bulb Temperature

Shaded area reflects AHRI (TVA) conditions.

kW = Total system power

High and low pressures are measured at the liquid and suction service valves.

Amps = outdoor unit amps (comp.+fan)

Expanded Cooling Data — GPC1342H41AC

			Outdoor Ambient Temperature																							
			65ºF				75ºF				85ºF				95ºF				105ºF				115ºF			
			Entering Indoor Wet Bulb Temperature																							
IDB	Airflow		59	63	67	71	59	63	67	71	59	63	67	71	59	63	67	71	59	63	67	71	59	63	67	71
70	1580	MBh	40.2	41.6	45.6	-	39.2	40.7	44.6	-	38.3	39.7	43.5	-	37.4	38.7	42.4	-	35.5	36.8	40.3	-	32.9	34.1	37.3	-
		S/T	0.77	0.65	0.45	-	0.80	0.67	0.46	-	0.82	0.69	0.48	-	0.85	0.71	0.49	-	0.88	0.74	0.51	-	0.89	0.74	0.51	-
		ΔT	18	16	12	-	18	16	12	-	18	16	12	-	18	16	12	-	18	16	12	-	17	15	11	-
		kW	2.77	2.83	2.91	-	2.97	3.03	3.12	-	3.14	3.20	3.30	-	3.29	3.36	3.46	-	3.42	3.49	3.60	-	3.53	3.60	3.72	-
		Amps	12.3	12.5	12.9	-	13.1	13.4	13.7	-	14.0	14.3	14.7	-	14.8	15.1	15.6	-	15.6	16.0	16.4	-	16.4	16.8	17.3	-
		HI PR	225	242	256	-	252	272	287	-	287	309	326	-	327	352	372	-	368	396	418	-	406	437	462	-
		LO PR	110	117	128	-	117	124	135	-	121	129	141	-	127	135	148	-	133	142	155	-	138	147	160	-
	1410	MBh	39.0	40.4	44.3	-	38.1	39.5	43.3	-	37.2	38.5	42.2	-	36.3	37.6	41.2	-	34.5	35.7	39.1	-	31.9	33.1	36.3	-
		S/T	0.74	0.62	0.43	-	0.77	0.64	0.44	-	0.78	0.66	0.45	-	0.81	0.68	0.47	-	0.84	0.70	0.49	-	0.85	0.71	0.49	-
		ΔT	19	16	12	-	19	16	12	-	19	16	12	-	19	17	13	-	19	16	12	-	18	15	12	-
		kW	2.75	2.81	2.89	-	2.95	3.00	3.09	-	3.12	3.18	3.27	-	3.27	3.33	3.43	-	3.39	3.46	3.57	-	3.50	3.58	3.69	-
		Amps	12.2	12.5	12.8	-	13.0	13.3	13.6	-	13.9	14.2	14.6	-	14.7	15.0	15.4	-	15.5	15.8	16.3	-	16.3	16.6	17.1	-
		HI PR	223	240	253	-	250	269	284	-	284	306	323	-	324	348	368	-	364	392	414	-	402	433	457	-
		LO PR	109	116	127	-	115	123	134	-	120	128	139	-	126	134	146	-	132	140	153	-	137	145	159	-
	1240	MBh	36.0	37.3	40.9	-	35.2	36.4	39.9	-	34.3	35.6	39.0	-	33.5	34.7	38.0	-	31.8	33.0	36.1	-	29.5	30.5	33.5	-
		S/T	0.71	0.59	0.41	-	0.74	0.62	0.43	-	0.76	0.63	0.44	-	0.78	0.65	0.45	-	0.81	0.68	0.47	-	0.82	0.68	0.47	-
		ΔT	19	16	12	-	19	17	13	-	19	17	13	-	19	17	13	-	19	17	13	-	18	15	12	-
		kW	2.69	2.74	2.82	-	2.88	2.94	3.02	-	3.04	3.11	3.20	-	3.19	3.25	3.35	-	3.31	3.38	3.49	-	3.42	3.49	3.60	-
		Amps	12.0	12.2	12.5	-	12.7	13.0	13.3	-	13.6	13.9	14.3	-	14.4	14.7	15.1	-	15.2	15.5	15.9	-	15.9	16.2	16.7	-
		HI PR	216	233	246	-	242	261	275	-	276	297	313	-	314	338	357	-	353	380	401	-	390	420	444	-
		LO PR	106	113	123	-	112	119	130	-	116	124	135	-	122	130	142	-	128	136	149	-	132	141	154	-
75	1580	MBh	40.9	42.1	45.5	48.9	39.9	41.1	44.5	47.7	39.0	40.1	43.4	46.6	38.0	**39.1**	42.4	45.5	36.1	37.2	40.2	43.2	33.4	34.4	37.3	40.0
		S/T	0.88	0.79	0.60	0.38	0.91	0.82	0.62	0.40	0.94	0.84	0.63	0.41	0.97	**0.86**	0.65	0.42	1.00	0.90	0.68	0.44	1.00	0.90	0.68	0.44
		ΔT	21	19	16	11	21	20	16	11	21	20	16	11	21	**20**	16	11	21	19	16	11	19	18	15	10
		kW	2.79	2.85	2.93	3.02	2.99	3.05	3.14	3.23	3.16	3.23	3.32	3.43	3.32	**3.38**	3.49	3.60	3.45	3.52	3.63	3.74	3.56	3.63	3.75	3.87
		Amps	12.4	12.6	13.0	13.4	13.2	13.5	13.8	14.3	14.1	14.4	14.8	15.3	15.0	**15.3**	15.7	16.2	15.8	16.1	16.5	17.1	16.6	16.9	17.4	18.0
		HI PR	227	245	258	269	255	274	290	302	290	312	330	344	330	**355**	375	392	372	400	422	440	411	442	467	487
		LO PR	111	119	129	138	118	125	137	146	122	130	142	151	128	**137**	149	159	135	143	156	167	139	148	162	172
	1410	MBh	39.7	40.8	44.2	47.4	38.7	39.9	43.2	46.3	37.8	38.9	42.2	45.2	36.9	**38.0**	41.1	44.1	35.1	36.1	39.1	41.9	32.5	33.4	36.2	38.8
		S/T	0.84	0.75	0.57	0.37	0.87	0.78	0.59	0.38	0.89	0.80	0.60	0.39	0.92	**0.82**	0.62	0.40	0.96	0.85	0.65	0.42	0.96	0.86	0.65	0.42
		ΔT	22	20	16	11	22	20	17	11	22	20	17	11	22	**20**	17	12	22	20	16	11	20	19	15	11
		kW	2.77	2.83	2.91	2.99	2.97	3.03	3.12	3.21	3.14	3.20	3.30	3.40	3.29	**3.36**	3.46	3.57	3.42	3.49	3.60	3.71	3.53	3.60	3.72	3.84
		Amps	12.3	12.6	12.9	13.3	13.1	13.4	13.7	14.2	14.0	14.3	14.7	15.2	14.8	**15.1**	15.6	16.1	15.6	16.0	16.4	17.0	16.4	16.8	17.3	17.8
		HI PR	225	242	256	267	252	272	287	299	287	309	326	340	327	**352**	372	388	368	396	418	436	407	437	462	482
		LO PR	110	117	128	136	117	124	135	144	121	129	141	150	127	**135**	148	157	133	142	155	165	138	147	160	171
	1240	MBh	36.6	37.7	40.8	43.8	35.8	36.8	39.9	42.8	34.9	35.9	38.9	41.8	34.1	**35.1**	38.0	40.7	32.4	33.3	36.1	38.7	30.0	30.9	33.4	35.8
		S/T	0.81	0.72	0.55	0.35	0.84	0.75	0.57	0.37	0.86	0.77	0.58	0.37	0.89	**0.79**	0.60	0.39	0.92	0.82	0.62	0.40	0.93	0.83	0.63	0.40
		ΔT	22	20	17	11	22	20	17	12	22	20	17	12	22	**21**	17	12	22	20	17	12	21	19	16	11
		kW	2.71	2.76	2.84	2.93	2.90	2.96	3.04	3.14	3.07	3.13	3.22	3.32	3.22	**3.28**	3.38	3.48	3.34	3.41	3.51	3.62	3.45	3.52	3.63	3.74
		Amps	12.0	12.3	12.6	13.0	12.8	13.1	13.4	13.8	13.7	14.0	14.4	14.8	14.5	**14.8**	15.2	15.7	15.3	15.6	16.0	16.5	16.0	16.4	16.8	17.4
		HI PR	218	235	248	259	245	264	278	290	279	300	317	330	317	**341**	360	376	357	384	406	423	394	424	448	467
		LO PR	107	114	124	132	113	120	131	140	117	125	136	145	123	**131**	143	153	129	138	150	160	134	142	155	165

IDB: Entering Indoor Dry Bulb Temperature

High and low pressures are measured at the liquid and suction service valves.

Shaded area reflects ACCA (TVA) conditions

kW = Total system power

Amps = outdoor unit amps (comp.+fan)

Expanded Cooling Data — GPC1342H41AC (cont.)

			Outdoor Ambient Temperature																							
			65ºF				75ºF				85ºF				95ºF				105ºF				115ºF			
			Entering Indoor Wet Bulb Temperature																							
IDB	Airflow		59	63	67	71	59	63	67	71	59	63	67	71	59	63	67	71	59	63	67	71	59	63	67	71
80	1580	MBh	41.6	42.5	45.4	48.5	40.6	41.5	44.3	47.4	39.6	40.5	43.3	46.3	38.7	39.5	42.2	45.1	36.7	37.6	40.1	42.9	34.0	34.8	37.2	39.7
		S/T	0.97	0.91	0.74	0.55	1.00	0.94	0.76	0.57	1.00	0.96	0.78	0.59	1.00	1.00	0.81	0.60	1.00	1.00	0.84	0.63	1.00	1.00	0.85	0.63
		ΔT	23	22	19	16	24	23	20	16	23	23	20	16	23	23	20	16	21	22	20	16	20	20	18	15
		kW	2.81	2.87	2.95	3.04	3.01	3.07	3.16	3.26	3.19	3.25	3.35	3.45	3.34	3.41	3.52	3.63	3.47	3.55	3.66	3.77	3.59	3.66	3.78	3.90
		Amps	12.5	12.7	13.1	13.5	13.3	13.6	13.9	14.4	14.3	14.5	14.9	15.4	15.1	15.4	15.8	16.3	15.9	16.2	16.7	17.2	16.7	17.0	17.5	18.1
		HI PR	230	247	261	272	258	277	293	305	293	315	333	347	334	359	379	395	375	404	427	445	415	446	471	492
		LO PR	113	120	131	139	119	126	138	147	124	131	144	153	130	138	151	161	136	145	158	168	141	150	163	174
	1410	MBh	40.4	41.3	44.1	47.1	39.4	40.3	43.1	46.0	38.5	39.3	42.0	44.9	37.6	38.4	**41.0**	43.8	35.7	36.5	39.0	41.6	33.0	33.8	36.1	38.6
		S/T	0.92	0.86	0.70	0.53	0.95	0.89	0.73	0.54	0.98	0.92	0.75	0.56	1.00	0.95	**0.77**	0.58	1.00	0.98	0.80	0.60	1.00	0.99	0.81	0.60
		ΔT	24	23	20	16	25	24	20	16	25	24	20	16	24	24	**21**	16	23	23	20	16	22	22	19	15
		kW	2.79	2.85	2.93	3.02	2.99	3.05	3.14	3.23	3.16	3.23	3.32	3.43	3.32	3.38	**3.49**	3.60	3.45	3.52	3.63	3.74	3.56	3.63	3.75	3.87
		Amps	12.4	12.6	13.0	13.4	13.2	13.5	13.8	14.3	14.1	14.4	14.8	15.3	15.0	15.3	**15.7**	16.2	15.8	16.1	16.5	17.1	16.6	16.9	17.4	18.0
		HI PR	227	245	258	269	255	274	290	302	290	312	330	344	330	356	**375**	392	372	400	422	440	411	442	467	487
		LO PR	111	119	129	138	118	125	137	146	122	130	142	151	129	137	**149**	159	135	143	156	167	139	148	162	172
	1240	MBh	37.3	38.1	40.7	43.5	36.4	37.2	39.7	42.5	35.5	36.3	38.8	41.5	34.7	35.4	37.8	40.5	32.9	33.6	36.0	38.4	30.5	31.2	33.3	35.6
		S/T	0.89	0.83	0.68	0.51	0.92	0.86	0.70	0.52	0.94	0.88	0.72	0.54	0.97	0.91	0.74	0.56	1.01	0.95	0.77	0.58	1.02	0.96	0.78	0.58
		ΔT	25	23	20	16	25	24	21	17	25	24	21	17	25	24	21	17	25	24	21	16	23	22	19	15
		kW	2.73	2.78	2.86	2.95	2.92	2.98	3.07	3.16	3.09	3.15	3.25	3.35	3.24	3.31	3.41	3.51	3.37	3.44	3.54	3.65	3.48	3.55	3.66	3.77
		Amps	12.1	12.4	12.7	13.1	12.9	13.2	13.5	13.9	13.8	14.1	14.5	14.9	14.6	14.9	15.3	15.8	15.4	15.7	16.2	16.7	16.2	16.5	17.0	17.5
		HI PR	220	237	251	261	247	266	281	293	281	303	320	333	320	345	364	380	360	388	410	427	398	429	453	472
		LO PR	108	115	126	134	114	121	133	141	119	126	138	147	125	133	145	154	131	139	152	162	135	144	157	167
85	1580	MBh	42.3	43.1	45.2	48.2	41.3	42.1	44.1	47.1	40.3	41.1	43.1	45.9	39.4	40.1	42.0	44.8	37.4	38.1	39.9	42.6	34.6	35.3	37.0	39.4
		S/T	1.00	0.98	0.88	0.71	1.00	1.00	0.91	0.74	1.00	1.00	0.94	0.76	1.00	1.00	0.97	0.78	1.00	1.00	1.00	0.81	1.00	1.00	1.00	0.82
		ΔT	25	24	23	20	24	25	23	20	23	24	23	20	23	23	24	20	22	22	23	20	20	21	22	19
		kW	2.83	2.89	2.97	3.06	3.03	3.09	3.19	3.28	3.21	3.28	3.38	3.48	3.37	3.44	3.54	3.65	3.50	3.57	3.68	3.80	3.62	3.69	3.81	3.93
		Amps	12.6	12.8	13.2	13.6	13.4	13.7	14.0	14.5	14.4	14.7	15.1	15.5	15.2	15.5	15.9	16.4	16.0	16.3	16.8	17.4	16.8	17.2	17.7	18.3
		HI PR	232	250	263	275	260	280	296	308	296	318	336	351	337	363	383	399	379	408	431	449	419	451	476	496
		LO PR	114	121	132	141	120	128	139	149	125	133	145	154	131	139	152	162	137	146	160	170	142	151	165	176
	1410	MBh	41.1	41.9	43.9	46.8	40.1	40.9	42.8	45.7	39.2	39.9	41.8	44.6	38.2	39.0	40.8	43.5	36.3	37.0	38.8	41.3	33.6	34.3	35.9	38.3
		S/T	0.96	0.93	0.84	0.68	1.00	0.96	0.87	0.71	1.00	0.99	0.89	0.72	1.00	1.00	0.92	0.75	1.00	1.00	0.96	0.78	1.00	1.00	0.96	0.78
		ΔT	26	25	24	21	26	26	24	21	26	26	24	21	25	25	25	21	24	24	24	21	22	22	23	20
		kW	2.81	2.87	2.95	3.04	3.01	3.07	3.16	3.26	3.19	3.25	3.35	3.45	3.34	3.41	3.52	3.63	3.47	3.55	3.66	3.77	3.59	3.66	3.78	3.90
		Amps	12.5	12.7	13.1	13.5	13.3	13.6	13.9	14.4	14.3	14.5	14.9	15.4	15.1	15.4	15.8	16.3	15.9	16.2	16.7	17.2	16.7	17.0	17.5	18.1
		HI PR	230	247	261	272	258	277	293	305	293	315	333	347	334	359	379	395	375	404	427	445	415	446	471	492
		LO PR	113	120	131	139	119	126	138	147	124	131	144	153	130	138	151	161	136	145	158	168	141	150	163	174
	1240	MBh	37.9	38.6	40.5	43.2	37.0	37.7	39.5	42.2	36.2	36.9	38.6	41.2	35.3	36.0	37.7	40.2	33.5	34.2	35.8	38.2	31.0	31.6	33.1	35.4
		S/T	0.93	0.90	0.81	0.66	0.96	0.93	0.84	0.68	0.99	0.95	0.86	0.70	1.00	0.98	0.89	0.72	1.00	1.00	0.92	0.75	1.00	1.00	0.93	0.75
		ΔT	26	26	24	21	26	26	25	21	27	26	25	21	26	26	25	21	25	25	24	21	23	23	23	20
		kW	2.75	2.80	2.89	2.97	2.94	3.00	3.09	3.18	3.11	3.18	3.27	3.37	3.26	3.33	3.43	3.54	3.39	3.46	3.57	3.68	3.50	3.58	3.69	3.80
		Amps	12.2	12.5	12.8	13.2	13.0	13.3	13.6	14.0	13.9	14.2	14.6	15.1	14.7	15.0	15.4	15.9	15.5	15.8	16.3	16.8	16.3	16.6	17.1	17.7
		HI PR	223	240	253	264	250	269	284	296	284	306	323	337	324	348	368	384	364	392	414	432	402	433	457	477
		LO PR	109	116	127	135	115	123	134	143	120	128	139	148	126	134	146	156	132	140	153	163	136	145	159	169

IDB: Entering Indoor Dry Bulb Temperature
High and low pressures are measured at the liquid and suction service valves.

Shaded area reflects AHRI (TVA) conditions.

kW = Total system power
Amps = outdoor unit amps (comp.+fan)

Expanded Cooling Data — GPC1348H41**

			Outdoor Ambient Temperature																							
			65ºF				75ºF				85ºF				95ºF				105ºF				115ºF			
			Entering Indoor Wet Bulb Temperature																							
IDB	Airflow		59	63	67	71	59	63	67	71	59	63	67	71	59	63	67	71	59	63	67	71	59	63	67	71
70	1800	MBh	44.6	46.2	50.6	-	43.5	45.1	49.5	-	42.5	44.1	48.3	-	41.5	43.0	47.1	-	39.4	40.8	44.7	-	36.5	37.8	41.4	-
		S/T	0.77	0.64	0.44	-	0.79	0.66	0.46	-	0.81	0.68	0.47	-	0.84	0.70	0.49	-	0.87	0.73	0.50	-	0.88	0.73	0.51	-
		ΔT	17	15	11	-	18	15	12	-	18	15	12	-	18	15	12	-	18	15	12	-	16	14	11	-
		kW	3.20	3.27	3.36	-	3.43	3.49	3.60	-	3.62	3.70	3.81	-	3.80	3.87	3.99	-	3.95	4.03	4.15	-	4.07	4.16	4.29	-
		Amps	13.9	14.2	14.5	-	14.8	15.1	15.5	-	15.9	16.2	16.6	-	16.8	17.1	17.6	-	17.7	18.0	18.5	-	18.5	18.9	19.5	-
		Hi PR	234	252	266	-	262	282	298	-	298	321	339	-	340	366	386	-	382	411	434	-	422	454	480	-
		Lo PR	112	119	130	-	118	125	137	-	123	130	142	-	129	137	149	-	135	143	157	-	139	148	162	-
	1600	MBh	43.3	44.9	49.2	-	42.3	43.8	48.0	-	41.3	42.8	46.9	-	40.3	41.7	45.7	-	38.3	39.6	43.4	-	35.4	36.7	40.2	-
		S/T	0.73	0.61	0.42	-	0.76	0.63	0.44	-	0.78	0.65	0.45	-	0.80	0.67	0.46	-	0.83	0.69	0.48	-	0.84	0.70	0.49	-
		ΔT	18	16	12	-	18	16	12	-	18	16	12	-	19	16	12	-	18	16	12	-	17	15	11	-
		kW	3.18	3.24	3.34	-	3.40	3.47	3.57	-	3.60	3.67	3.78	-	3.77	3.85	3.96	-	3.92	4.00	4.12	-	4.04	4.12	4.25	-
		Amps	13.8	14.1	14.4	-	14.7	15.0	15.4	-	15.7	16.0	16.5	-	16.6	17.0	17.4	-	17.5	17.9	18.4	-	18.4	18.8	19.3	-
		Hi PR	231	249	263	-	260	279	295	-	295	318	336	-	336	362	382	-	378	407	430	-	418	450	475	-
		Lo PR	110	118	128	-	117	124	136	-	121	129	141	-	127	136	148	-	134	142	155	-	138	147	160	-
	1400	MBh	40.0	41.4	45.4	-	39.0	40.4	44.3	-	38.1	39.5	43.3	-	37.2	38.5	42.2	-	35.3	36.6	40.1	-	32.7	33.9	37.1	-
		S/T	0.70	0.59	0.41	-	0.73	0.61	0.42	-	0.75	0.63	0.43	-	0.77	0.65	0.45	-	0.80	0.67	0.46	-	0.81	0.68	0.47	-
		ΔT	18	16	12	-	19	16	12	-	19	16	12	-	19	16	12	-	19	16	12	-	17	15	11	-
		kW	3.11	3.17	3.26	-	3.33	3.39	3.49	-	3.52	3.59	3.69	-	3.68	3.76	3.87	-	3.82	3.90	4.02	-	3.95	4.03	4.15	-
		Amps	13.5	13.8	14.1	-	14.4	14.7	15.0	-	15.4	15.7	16.1	-	16.2	16.6	17.0	-	17.1	17.5	18.0	-	18.0	18.3	18.9	-
		Hi PR	224	242	255	-	252	271	286	-	286	308	326	-	326	351	371	-	367	395	417	-	406	436	461	-
		Lo PR	107	114	124	-	113	120	131	-	118	125	137	-	124	131	144	-	130	138	150	-	134	143	156	-
75	1800	MBh	45.3	46.7	50.5	54.2	44.3	45.6	49.4	53.0	43.2	44.5	48.2	51.7	42.2	43.4	47.0	50.4	40.1	41.3	44.7	47.9	37.1	38.2	41.4	44.4
		S/T	0.87	0.78	0.59	0.38	0.90	0.81	0.61	0.39	0.93	0.83	0.63	0.40	0.96	0.85	0.65	0.42	0.99	0.89	0.67	0.43	1.00	0.89	0.68	0.44
		ΔT	20	19	15	11	20	19	15	11	20	19	15	11	21	19	16	11	20	19	15	11	19	17	14	10
		kW	3.23	3.29	3.38	3.48	3.45	3.52	3.62	3.73	3.65	3.73	3.84	3.95	3.83	3.91	4.02	4.15	3.98	4.06	4.18	4.31	4.10	4.19	4.32	4.46
		Amps	14.0	14.3	14.7	15.1	14.9	15.2	15.6	16.1	16.0	16.3	16.7	17.3	16.9	17.2	17.7	18.3	17.8	18.2	18.7	19.3	18.7	19.1	19.6	20.3
		Hi PR	236	254	268	280	265	285	301	314	301	324	342	357	343	369	390	407	386	415	439	458	427	459	485	506
		Lo PR	113	120	131	139	119	127	138	147	124	132	144	153	130	138	151	161	136	145	158	169	141	150	164	174
	1600	MBh	44.0	45.3	49.1	52.7	43.0	44.3	47.9	51.4	42.0	43.2	46.8	50.2	41.0	**42.2**	45.6	49.0	38.9	40.1	43.4	46.5	36.0	37.1	40.2	43.1
		S/T	0.83	0.74	0.56	0.36	0.86	0.77	0.58	0.37	0.88	0.79	0.60	0.38	0.91	**0.82**	0.62	0.40	0.95	0.85	0.64	0.41	0.95	0.85	0.65	0.42
		ΔT	21	19	16	11	21	20	16	11	21	20	16	11	21	**20**	16	11	21	19	16	11	20	18	15	10
		kW	3.21	3.27	3.36	3.46	3.43	3.50	3.60	3.71	3.62	3.70	3.81	3.92	3.80	**3.88**	3.99	4.12	3.95	4.03	4.15	4.28	4.07	4.16	4.29	4.42
		Amps	13.9	14.2	14.5	15.0	14.8	15.1	15.5	16.0	15.9	16.2	16.6	17.1	16.8	**17.1**	17.6	18.1	17.7	18.0	18.5	19.1	18.5	18.9	19.5	20.1
		Hi PR	234	252	266	277	262	282	298	311	298	321	339	354	340	**366**	386	403	382	411	434	453	422	454	480	501
		Lo PR	112	119	130	138	118	125	137	146	123	130	142	152	129	**137**	149	159	135	144	157	167	140	148	162	173
	1400	MBh	40.6	41.8	45.3	48.6	39.7	40.9	44.2	47.5	38.7	39.9	43.2	46.3	37.8	38.9	42.1	45.2	35.9	37.0	40.0	42.9	33.3	34.2	37.1	39.8
		S/T	0.80	0.72	0.54	0.35	0.83	0.74	0.56	0.36	0.85	0.76	0.58	0.37	0.88	0.79	0.59	0.38	0.91	0.82	0.62	0.40	0.92	0.82	0.62	0.40
		ΔT	21	20	16	11	22	20	16	11	22	20	16	11	22	20	16	11	22	20	16	11	20	19	15	10
		kW	3.14	3.20	3.29	3.38	3.35	3.42	3.52	3.62	3.54	3.61	3.72	3.83	3.71	3.79	3.90	4.02	3.85	3.93	4.05	4.18	3.98	4.06	4.18	4.32
		Amps	13.6	13.9	14.2	14.7	14.5	14.8	15.2	15.6	15.5	15.8	16.2	16.7	16.4	16.7	17.2	17.7	17.2	17.6	18.1	18.7	18.1	18.5	19.0	19.6
		Hi PR	227	244	258	269	254	274	289	302	289	311	329	343	330	355	375	391	371	399	421	439	410	441	466	486
		Lo PR	108	115	126	134	114	122	133	141	119	126	138	147	125	133	145	154	131	139	152	162	135	144	157	167

IDB: Entering Indoor Dry Bulb Temperature

Shaded area reflects ACCA (TVA) conditions

kW = Total system power

High and low pressures are measured at the liquid and suction service valves.

Amps = outdoor unit amps (comp.+fan)

Expanded Cooling Data — GPC1348H41** (cont.)

			Outdoor Ambient Temperature																							
			65ºF				75ºF				85ºF				95ºF				105ºF				115ºF			
			Entering Indoor Wet Bulb Temperature																							
IDB	Airflow		59	63	67	71	59	63	67	71	59	63	67	71	59	63	67	71	59	63	67	71	59	63	67	71
80	1800	MBh	46.1	47.2	50.4	53.9	45.1	46.1	49.2	52.6	44.0	45.0	48.0	51.4	42.9	43.9	46.9	50.1	40.8	41.7	44.5	47.6	37.8	38.6	41.2	44.1
		S/T	0.96	0.90	0.73	0.55	1.00	0.93	0.76	0.56	1.00	0.95	0.78	0.58	1.00	1.00	0.80	0.60	1.00	1.00	0.83	0.62	1.00	1.00	0.84	0.63
		ΔT	23	22	19	15	23	22	19	15	22	22	19	15	22	22	19	15	21	21	19	15	19	20	18	14
		kW	3.25	3.31	3.41	3.51	3.48	3.55	3.65	3.76	3.68	3.75	3.87	3.98	3.86	3.94	4.06	4.18	4.01	4.09	4.22	4.35	4.14	4.22	4.35	4.49
		Amps	14.1	14.4	14.8	15.2	15.0	15.3	15.7	16.2	16.1	16.4	16.9	17.4	17.0	17.4	17.9	18.4	17.9	18.3	18.8	19.4	18.8	19.2	19.8	20.4
		Hi PR	238	257	271	283	268	288	304	317	304	328	346	361	347	373	394	411	390	420	443	462	431	464	490	511
		Lo PR	114	121	132	141	120	128	140	149	125	133	145	155	131	140	153	162	138	146	160	170	142	151	165	176
	1600	MBh	44.8	45.8	48.9	52.3	43.8	44.7	47.8	51.1	42.7	43.7	46.6	49.9	41.7	42.6	**45.5**	48.6	39.6	40.5	43.2	46.2	36.7	37.5	40.0	42.8
		S/T	0.91	0.85	0.70	0.52	0.94	0.89	0.72	0.54	0.97	0.91	0.74	0.55	1.00	0.94	**0.76**	0.57	1.00	0.97	0.79	0.59	1.00	0.98	0.80	0.60
		ΔT	23	22	20	16	24	23	20	16	24	23	20	16	24	23	**20**	16	23	23	20	16	21	21	18	15
		kW	3.23	3.29	3.38	3.48	3.45	3.52	3.62	3.73	3.65	3.73	3.84	3.95	3.83	3.91	**4.02**	4.15	3.98	4.06	4.18	4.31	4.11	4.19	4.32	4.46
		Amps	14.0	14.3	14.7	15.1	14.9	15.2	15.6	16.1	16.0	16.3	16.7	17.3	16.9	17.2	**17.7**	18.3	17.8	18.2	18.7	19.3	18.7	19.1	19.6	20.3
		Hi PR	236	254	268	280	265	285	301	314	301	324	342	357	343	369	**390**	407	386	415	439	458	427	459	485	506
		Lo PR	113	120	131	139	119	127	138	147	124	132	144	153	130	138	**151**	161	136	145	158	169	141	150	164	174
	1400	MBh	41.4	42.3	45.1	48.3	40.4	41.3	44.1	47.1	39.4	40.3	43.0	46.0	38.5	39.3	42.0	44.9	36.5	37.3	39.9	42.6	33.9	34.6	37.0	39.5
		S/T	0.88	0.82	0.67	0.50	0.91	0.85	0.70	0.52	0.93	0.88	0.71	0.53	0.96	0.90	0.74	0.55	1.00	0.94	0.76	0.57	1.01	0.95	0.77	0.58
		ΔT	24	23	20	16	24	23	20	16	24	23	20	16	24	23	20	16	24	23	20	16	22	21	19	15
		kW	3.16	3.22	3.31	3.41	3.38	3.44	3.54	3.65	3.57	3.64	3.75	3.86	3.74	3.82	3.93	4.05	3.88	3.96	4.08	4.21	4.01	4.09	4.22	4.35
		Amps	13.7	14.0	14.3	14.8	14.6	14.9	15.3	15.7	15.6	15.9	16.4	16.9	16.5	16.8	17.3	17.9	17.4	17.7	18.2	18.8	18.2	18.6	19.2	19.8
		Hi PR	229	246	260	271	257	277	292	305	292	315	332	346	333	358	378	395	375	403	426	444	414	445	470	490
		Lo PR	109	116	127	135	116	123	134	143	120	128	139	149	126	134	146	156	132	141	154	163	137	145	159	169
85	1800	MBh	47.0	47.9	50.1	53.5	45.9	46.7	49.0	52.2	44.8	45.6	47.8	51.0	43.7	44.5	46.6	49.7	41.5	42.3	44.3	47.3	38.4	39.2	41.0	43.8
		S/T	1.00	0.97	0.87	0.71	1.00	1.00	0.90	0.73	1.00	1.00	0.93	0.75	1.00	1.00	0.96	0.78	1.00	1.00	0.99	0.81	1.00	1.00	1.00	0.81
		ΔT	24	24	22	19	23	24	23	20	23	23	23	20	22	23	23	20	21	22	22	19	20	20	21	18
		kW	3.28	3.34	3.43	3.54	3.50	3.57	3.68	3.79	3.71	3.78	3.90	4.02	3.89	3.97	4.09	4.21	4.04	4.12	4.25	4.38	4.17	4.26	4.39	4.53
		Amps	14.2	14.5	14.9	15.3	15.1	15.4	15.9	16.4	16.2	16.5	17.0	17.5	17.1	17.5	18.0	18.6	18.1	18.5	19.0	19.6	19.0	19.4	20.0	20.6
		Hi PR	241	259	274	285	270	291	307	320	307	331	349	364	350	377	398	415	394	424	448	467	435	468	495	516
		Lo PR	115	122	134	142	121	129	141	150	126	134	147	156	133	141	154	164	139	148	161	172	144	153	167	178
	1600	MBh	45.6	46.5	48.7	51.9	44.5	45.4	47.5	50.7	43.5	44.3	46.4	49.5	42.4	43.2	45.3	48.3	40.3	41.1	43.0	45.9	37.3	38.0	39.8	42.5
		S/T	0.96	0.92	0.83	0.67	0.99	0.96	0.86	0.70	1.00	0.98	0.88	0.72	1.00	1.00	0.91	0.74	1.00	1.00	0.95	0.77	1.00	1.00	0.96	0.77
		ΔT	25	25	23	20	25	25	24	20	25	25	24	20	24	25	24	21	23	24	23	20	21	22	22	19
		kW	3.25	3.31	3.41	3.51	3.48	3.55	3.65	3.76	3.68	3.75	3.87	3.98	3.86	3.94	4.06	4.18	4.01	4.09	4.22	4.35	4.14	4.22	4.35	4.49
		Amps	14.1	14.4	14.8	15.2	15.0	15.3	15.7	16.2	16.1	16.4	16.9	17.4	17.0	17.4	17.9	18.4	17.9	18.3	18.8	19.4	18.8	19.2	19.8	20.4
		Hi PR	238	257	271	283	268	288	304	317	304	328	346	361	347	373	394	411	390	420	443	462	431	464	490	511
		Lo PR	114	121	132	141	120	128	140	149	125	133	145	155	131	140	153	162	138	146	160	170	142	151	165	176
	1400	MBh	42.1	42.9	44.9	47.9	41.1	41.9	43.9	46.8	40.1	40.9	42.8	45.7	39.1	39.9	41.8	44.6	37.2	37.9	39.7	42.4	34.4	35.1	36.8	39.2
		S/T	0.92	0.89	0.80	0.65	0.95	0.92	0.83	0.67	0.98	0.94	0.85	0.69	1.00	0.97	0.88	0.71	1.00	1.00	0.91	0.74	1.00	1.00	0.92	0.75
		ΔT	25	25	24	20	26	25	24	21	26	25	24	21	26	26	24	21	24	25	24	21	23	23	22	19
		kW	3.18	3.24	3.33	3.43	3.40	3.47	3.57	3.68	3.60	3.67	3.78	3.89	3.77	3.84	3.96	4.08	3.91	3.99	4.12	4.24	4.04	4.12	4.25	4.38
		Amps	13.8	14.1	14.4	14.9	14.7	15.0	15.4	15.9	15.7	16.0	16.5	17.0	16.6	17.0	17.4	18.0	17.5	17.9	18.4	19.0	18.4	18.8	19.3	20.0
		Hi PR	231	249	263	274	260	279	295	308	295	318	335	350	336	362	382	399	378	407	430	448	418	450	475	495
		Lo PR	110	117	128	137	117	124	136	144	121	129	141	150	127	136	148	158	133	142	155	165	138	147	160	171

IDB: Entering Indoor Dry Bulb Temperature

Shaded area reflects AHRI (TVA) conditions.

kW = Total system power

High and low pressures are measured at the liquid and suction service valves.

Amps = outdoor unit amps (comp.+fan)

Expanded Cooling Data — GPC1349H41**

			Outdoor Ambient Temperature																							
			65ºF				75ºF				85ºF				95ºF				105ºF				115ºF			
			Entering Indoor Wet Bulb Temperature																							
IDB	Airflow		59	63	67	71	59	63	67	71	59	63	67	71	59	63	67	71	59	63	67	71	59	63	67	71
70	1800	MBh	44.6	46.2	50.6	-	43.5	45.1	49.5	-	42.5	44.1	48.3	-	41.5	43.0	47.1	-	39.4	40.8	44.7	-	36.5	37.8	41.4	-
		S/T	0.77	0.64	0.44	-	0.79	0.66	0.46	-	0.81	0.68	0.47	-	0.84	0.70	0.49	-	0.87	0.73	0.50	-	0.88	0.73	0.51	-
		DT	17	15	11	-	18	15	12	-	18	15	12	-	18	15	12	-	18	15	12	-	16	14	11	-
		kW	3.20	3.27	3.36	-	3.43	3.49	3.60	-	3.62	3.70	3.81	-	3.80	3.87	3.99	-	3.95	4.03	4.15	-	4.07	4.16	4.29	-
		Amps	13.9	14.2	14.5	-	14.8	15.1	15.5	-	15.9	16.2	16.6	-	16.8	17.1	17.6	-	17.7	18.0	18.5	-	18.5	18.9	19.5	-
		Hi PR	234	252	266	-	262	282	298	-	298	321	339	-	340	366	386	-	382	411	434	-	422	454	480	-
		Lo PR	112	119	130	-	118	125	137	-	123	130	142	-	129	137	149	-	135	143	157	-	139	148	162	-
	1600	MBh	43.3	44.9	49.2	-	42.3	43.8	48.0	-	41.3	42.8	46.9	-	40.3	41.7	45.7	-	38.3	39.6	43.4	-	35.4	36.7	40.2	-
		S/T	0.73	0.61	0.42	-	0.76	0.63	0.44	-	0.78	0.65	0.45	-	0.80	0.67	0.46	-	0.83	0.69	0.48	-	0.84	0.70	0.49	-
		DT	18	16	12	-	18	16	12	-	18	16	12	-	19	16	12	-	18	16	12	-	17	15	11	-
		kW	3.18	3.24	3.34	-	3.40	3.47	3.57	-	3.60	3.67	3.78	-	3.77	3.85	3.96	-	3.92	4.00	4.12	-	4.04	4.12	4.25	-
		Amps	13.8	14.1	14.4	-	14.7	15.0	15.4	-	15.7	16.0	16.5	-	16.6	17.0	17.4	-	17.5	17.9	18.4	-	18.4	18.8	19.3	-
		Hi PR	231	249	263	-	260	279	295	-	295	318	336	-	336	362	382	-	378	407	430	-	418	450	475	-
		Lo PR	110	118	128	-	117	124	136	-	121	129	141	-	127	136	148	-	134	142	155	-	138	147	160	-
	1400	MBh	40.0	41.4	45.4	-	39.0	40.4	44.3	-	38.1	39.5	43.3	-	37.2	38.5	42.2	-	35.3	36.6	40.1	-	32.7	33.9	37.1	-
		S/T	0.70	0.59	0.41	-	0.73	0.61	0.42	-	0.75	0.63	0.43	-	0.77	0.65	0.45	-	0.80	0.67	0.46	-	0.81	0.68	0.47	-
		DT	18	16	12	-	19	16	12	-	19	16	12	-	19	16	12	-	19	16	12	-	17	15	11	-
		kW	3.11	3.17	3.26	-	3.33	3.39	3.49	-	3.52	3.59	3.69	-	3.68	3.76	3.87	-	3.82	3.90	4.02	-	3.95	4.03	4.15	-
		Amps	13.5	13.8	14.1	-	14.4	14.7	15.0	-	15.4	15.7	16.1	-	16.2	16.6	17.0	-	17.1	17.5	18.0	-	18.0	18.3	18.9	-
		Hi PR	224	242	255	-	252	271	286	-	286	308	326	-	326	351	371	-	367	395	417	-	406	436	461	-
		Lo PR	107	114	124	-	113	120	131	-	118	125	137	-	124	131	144	-	130	138	150	-	134	143	156	-
75	1800	MBh	45.3	46.7	50.5	54.2	44.3	45.6	49.4	53.0	43.2	44.5	48.2	51.7	42.2	**43.4**	47.0	50.4	40.1	41.3	44.7	47.9	37.1	38.2	41.4	44.4
		S/T	0.87	0.78	0.59	0.38	0.90	0.81	0.61	0.39	0.93	0.83	0.63	0.40	0.96	**0.85**	0.65	0.42	0.99	0.89	0.67	0.43	1.00	0.89	0.68	0.44
		DT	20	19	15	11	20	19	15	11	20	19	15	11	21	**19**	16	11	20	19	15	11	19	17	14	10
		kW	3.23	3.29	3.38	3.48	3.45	3.52	3.62	3.73	3.65	3.73	3.84	3.95	3.83	**3.91**	4.02	4.15	3.98	4.06	4.18	4.31	4.10	4.19	4.32	4.46
		Amps	14.0	14.3	14.7	15.1	14.9	15.2	15.6	16.1	16.0	16.3	16.7	17.3	16.9	**17.2**	17.7	18.3	17.8	18.2	18.7	19.3	18.7	19.1	19.6	20.3
		Hi PR	236	254	268	280	265	285	301	314	301	324	342	357	343	**369**	390	407	386	415	439	458	427	459	485	506
		Lo PR	113	120	131	139	119	127	138	147	124	132	144	153	130	**138**	151	161	136	145	158	169	141	150	164	174
	1600	MBh	44.0	45.3	49.1	52.7	43.0	44.3	47.9	51.4	42.0	43.2	46.8	50.2	41.0	**42.2**	45.6	49.0	38.9	40.1	43.4	46.5	36.0	37.1	40.2	43.1
		S/T	0.83	0.74	0.56	0.36	0.86	0.77	0.58	0.37	0.88	0.79	0.60	0.38	0.91	**0.82**	0.62	0.40	0.95	0.85	0.64	0.41	0.95	0.85	0.65	0.42
		DT	21	19	16	11	21	20	16	11	21	20	16	11	21	**20**	16	11	21	19	16	11	20	18	15	10
		kW	3.21	3.27	3.36	3.46	3.43	3.50	3.60	3.71	3.62	3.70	3.81	3.92	3.80	**3.88**	3.99	4.12	3.95	4.03	4.15	4.28	4.07	4.16	4.29	4.42
		Amps	13.9	14.2	14.5	15.0	14.8	15.1	15.5	16.0	15.9	16.2	16.6	17.1	16.8	**17.1**	17.6	18.1	17.7	18.0	18.5	19.1	18.5	18.9	19.5	20.1
		Hi PR	234	252	266	277	262	282	298	311	298	321	339	354	340	**366**	386	403	382	411	434	453	422	454	480	501
		Lo PR	112	119	130	138	118	125	137	146	123	130	142	152	129	**137**	149	159	135	144	157	167	140	148	162	173
	1400	MBh	40.6	41.8	45.3	48.6	39.7	40.9	44.2	47.5	38.7	39.9	43.2	46.3	37.8	**38.9**	42.1	45.2	35.9	37.0	40.0	42.9	33.3	34.2	37.1	39.8
		S/T	0.80	0.72	0.54	0.35	0.83	0.74	0.56	0.36	0.85	0.76	0.58	0.37	0.88	**0.79**	0.59	0.38	0.91	0.82	0.62	0.40	0.92	0.82	0.62	0.40
		DT	21	20	16	11	22	20	16	11	22	20	16	11	22	**20**	16	11	22	20	16	11	20	19	15	10
		kW	3.14	3.20	3.29	3.38	3.35	3.42	3.52	3.62	3.54	3.61	3.72	3.83	3.71	**3.79**	3.90	4.02	3.85	3.93	4.05	4.18	3.98	4.06	4.18	4.32
		Amps	13.6	13.9	14.2	14.7	14.5	14.8	15.2	15.6	15.5	15.8	16.2	16.7	16.4	**16.7**	17.2	17.7	17.2	17.6	18.1	18.7	18.1	18.5	19.0	19.6
		Hi PR	227	244	258	269	254	274	289	302	289	311	329	343	330	**355**	375	391	371	399	421	439	410	441	466	486
		Lo PR	108	115	126	134	114	122	133	141	119	126	138	147	125	**133**	145	154	131	139	152	162	135	144	157	167

IDB: Entering Indoor Dry Bulb Temperature
High and low pressures are measured at the liquid and suction service valves.

Shaded area reflects ACCA (TVA) conditions

kW = Total system power
Amps = outdoor unit amps (comp.+fan)

Expanded Cooling Data — GPC1349H41** (cont.)

			Outdoor Ambient Temperature																							
			65ºF				75ºF				85ºF				95ºF				105ºF				115ºF			
			Entering Indoor Wet Bulb Temperature																							
IDB	Airflow		59	63	67	71	59	63	67	71	59	63	67	71	59	63	67	71	59	63	67	71	59	63	67	71
80	1800	MBh	46.1	47.2	50.4	53.9	45.1	46.1	49.2	52.6	44.0	45.0	48.0	51.4	42.9	43.9	46.9	50.1	40.8	41.7	44.5	47.6	37.8	38.6	41.2	44.1
		S/T	0.96	0.90	0.73	0.55	1.00	0.93	0.76	0.56	1.00	0.95	0.78	0.58	1.00	1.00	0.80	0.60	1.00	1.00	0.83	0.62	1.00	1.00	0.84	0.63
		DT	23	22	19	15	23	22	19	15	22	22	19	15	22	22	19	15	21	21	19	15	19	20	18	14
		kW	3.25	3.31	3.41	3.51	3.48	3.55	3.65	3.76	3.68	3.75	3.87	3.98	3.86	3.94	4.06	4.18	4.01	4.09	4.22	4.35	4.14	4.22	4.35	4.49
		Amps	14.1	14.4	14.8	15.2	15.0	15.3	15.7	16.2	16.1	16.4	16.9	17.4	17.0	17.4	17.9	18.4	17.9	18.3	18.8	19.4	18.8	19.2	19.8	20.4
		Hi PR	238	257	271	283	268	288	304	317	304	328	346	361	347	373	394	411	390	420	443	462	431	464	490	511
		Lo PR	114	121	132	141	120	128	140	149	125	133	145	155	131	140	153	162	138	146	160	170	142	151	165	176
	1600	MBh	44.8	45.8	48.9	52.3	43.8	44.7	47.8	51.1	42.7	43.7	46.6	49.9	41.7	42.6	**45.5**	48.6	39.6	40.5	43.2	46.2	36.7	37.5	40.0	42.8
		S/T	0.91	0.85	0.70	0.52	0.94	0.89	0.72	0.54	0.97	0.91	0.74	0.55	1.00	0.94	**0.76**	0.57	1.00	0.97	0.79	0.59	1.00	0.98	0.80	0.60
		DT	23	22	20	16	24	23	20	16	24	23	20	16	24	23	**20**	16	23	23	20	16	21	21	18	15
		kW	3.23	3.29	3.38	3.48	3.45	3.52	3.62	3.73	3.65	3.73	3.84	3.95	3.83	3.91	**4.02**	4.15	3.98	4.06	4.18	4.31	4.11	4.19	4.32	4.46
		Amps	14.0	14.3	14.7	15.1	14.9	15.2	15.6	16.1	16.0	16.3	16.7	17.3	16.9	17.2	**17.7**	18.3	17.8	18.2	18.7	19.3	18.7	19.1	19.6	20.3
		Hi PR	236	254	268	280	265	285	301	314	301	324	342	357	343	369	**390**	407	386	415	439	458	427	459	485	506
		Lo PR	113	120	131	139	119	127	138	147	124	132	144	153	130	138	**151**	161	136	145	158	169	141	150	164	174
	1400	MBh	41.4	42.3	45.1	48.3	40.4	41.3	44.1	47.1	39.4	40.3	43.0	46.0	38.5	39.3	42.0	44.9	36.5	37.3	39.9	42.6	33.9	34.6	37.0	39.5
		S/T	0.88	0.82	0.67	0.50	0.91	0.85	0.70	0.52	0.93	0.88	0.71	0.53	0.96	0.90	0.74	0.55	1.00	0.94	0.76	0.57	1.01	0.95	0.77	0.58
		DT	24	23	20	16	24	23	20	16	24	23	20	16	24	23	20	16	24	23	20	16	22	21	19	15
		kW	3.16	3.22	3.31	3.41	3.38	3.44	3.54	3.65	3.57	3.64	3.75	3.86	3.74	3.82	3.93	4.05	3.88	3.96	4.08	4.21	4.01	4.09	4.22	4.35
		Amps	13.7	14.0	14.3	14.8	14.6	14.9	15.3	15.7	15.6	15.9	16.4	16.9	16.5	16.8	17.3	17.9	17.4	17.7	18.2	18.8	18.2	18.6	19.2	19.8
		Hi PR	229	246	260	271	257	277	292	305	292	315	332	346	333	358	378	395	375	403	426	444	414	445	470	490
		Lo PR	109	116	127	135	116	123	134	143	120	128	139	149	126	134	146	156	132	141	154	163	137	145	159	169
85	1800	MBh	47.0	47.9	50.1	53.5	45.9	46.7	49.0	52.2	44.8	45.6	47.8	51.0	43.7	44.5	46.6	49.7	41.5	42.3	44.3	47.3	38.4	39.2	41.0	43.8
		S/T	1.00	0.97	0.87	0.71	1.00	1.00	0.90	0.73	1.00	1.00	0.93	0.75	1.00	1.00	0.96	0.78	1.00	1.00	0.99	0.81	1.00	1.00	1.00	0.81
		DT	24	24	22	19	23	24	23	20	23	23	23	20	22	23	23	20	21	22	22	19	20	20	21	18
		kW	3.28	3.34	3.43	3.54	3.50	3.57	3.68	3.79	3.71	3.78	3.90	4.02	3.89	3.97	4.09	4.21	4.04	4.12	4.25	4.38	4.17	4.26	4.39	4.53
		Amps	14.2	14.5	14.9	15.3	15.1	15.4	15.9	16.4	16.2	16.5	17.0	17.5	17.1	17.5	18.0	18.6	18.1	18.5	19.0	19.6	19.0	19.4	20.0	20.6
		Hi PR	241	259	274	285	270	291	307	320	307	331	349	364	350	377	398	415	394	424	448	467	435	468	495	516
		Lo PR	115	122	134	142	121	129	141	150	126	134	147	156	133	141	154	164	139	148	161	172	144	153	167	178
	1600	MBh	45.6	46.5	48.7	51.9	44.5	45.4	47.5	50.7	43.5	44.3	46.4	49.5	42.4	43.2	45.3	48.3	40.3	41.1	43.0	45.9	37.3	38.0	39.8	42.5
		S/T	0.96	0.92	0.83	0.67	0.99	0.96	0.86	0.70	1.00	0.98	0.88	0.72	1.00	1.00	0.91	0.74	1.00	1.00	0.95	0.77	1.00	1.00	0.96	0.77
		DT	25	25	23	20	25	25	24	20	25	25	24	20	24	25	24	21	23	24	23	20	21	22	22	19
		kW	3.25	3.31	3.41	3.51	3.48	3.55	3.65	3.76	3.68	3.75	3.87	3.98	3.86	3.94	4.06	4.18	4.01	4.09	4.22	4.35	4.14	4.22	4.35	4.49
		Amps	14.1	14.4	14.8	15.2	15.0	15.3	15.7	16.2	16.1	16.4	16.9	17.4	17.0	17.4	17.9	18.4	17.9	18.3	18.8	19.4	18.8	19.2	19.8	20.4
		Hi PR	238	257	271	283	268	288	304	317	304	328	346	361	347	373	394	411	390	420	443	462	431	464	490	511
		Lo PR	114	121	132	141	120	128	140	149	125	133	145	155	131	140	153	162	138	146	160	170	142	151	165	176
	1400	MBh	42.1	42.9	44.9	47.9	41.1	41.9	43.9	46.8	40.1	40.9	42.8	45.7	39.1	39.9	41.8	44.6	37.2	37.9	39.7	42.4	34.4	35.1	36.8	39.2
		S/T	0.92	0.89	0.80	0.65	0.95	0.92	0.83	0.67	0.98	0.94	0.85	0.69	1.00	0.97	0.88	0.71	1.00	1.00	0.91	0.74	1.00	1.00	0.92	0.75
		DT	25	25	24	20	26	25	24	21	26	25	24	21	26	26	24	21	24	25	24	21	23	23	22	19
		kW	3.18	3.24	3.33	3.43	3.40	3.47	3.57	3.68	3.60	3.67	3.78	3.89	3.77	3.84	3.96	4.08	3.91	3.99	4.12	4.24	4.04	4.12	4.25	4.38
		Amps	13.8	14.1	14.4	14.9	14.7	15.0	15.4	15.9	15.7	16.0	16.5	17.0	16.6	17.0	17.4	18.0	17.5	17.9	18.4	19.0	18.4	18.8	19.3	20.0
		Hi PR	231	249	263	274	260	279	295	308	295	318	335	350	336	362	382	399	378	407	430	448	418	450	475	495
		Lo PR	110	117	128	137	117	124	136	144	121	129	141	150	127	136	148	158	133	142	155	165	138	147	160	171

IDB: Entering Indoor Dry Bulb Temperature

High and low pressures are measured at the liquid and suction service valves.

Shaded area reflects AHRI (TVA) conditions.

kW = Total system power

Amps = outdoor unit amps (comp.+fan)

Expanded Cooling Data — GPC1360H41BA

			Outdoor Ambient Temperature																							
			65ºF				75ºF				85ºF				95ºF				105ºF				115ºF			
			Entering Indoor Wet Bulb Temperature																							
IDB	Airflow		59	63	67	71	59	63	67	71	59	63	67	71	59	63	67	71	59	63	67	71	59	63	67	71
70	2085	MBh	56.3	58.4	64.0	-	55.0	57.0	62.5	-	53.7	55.7	61.0	-	52.4	54.3	59.5	-	49.8	51.6	56.5	-	46.1	47.8	52.4	-
		S/T	0.75	0.63	0.43	-	0.78	0.65	0.45	-	0.80	0.67	0.46	-	0.82	0.69	0.48	-	0.85	0.71	0.49	-	0.86	0.72	0.50	-
		ΔT	19	16	12	-	19	16	12	-	19	16	12	-	19	16	12	-	19	16	12	-	18	15	12	-
		kW	3.99	4.07	4.20	-	4.29	4.39	4.53	-	4.56	4.66	4.82	-	4.80	4.91	5.07	-	5.01	5.12	5.29	-	5.18	5.30	5.48	-
		Amps	18.8	19.2	19.7	-	20.0	20.4	21.0	-	21.4	21.9	22.5	-	22.6	23.1	23.7	-	23.8	24.3	25.0	-	25.0	25.5	26.3	-
		Hi PR	233	251	265	-	261	281	297	-	297	320	338	-	339	364	385	-	381	410	433	-	421	453	478	-
		Lo PR	109	116	127	-	115	123	134	-	120	128	139	-	126	134	146	-	132	141	153	-	137	145	159	-
	1850	MBh	54.7	56.7	62.1	-	53.4	55.4	60.7	-	52.2	54.1	59.2	-	50.9	52.7	57.8	-	48.3	50.1	54.9	-	44.8	46.4	50.9	-
		S/T	0.72	0.60	0.41	-	0.74	0.62	0.43	-	0.76	0.64	0.44	-	0.79	0.66	0.45	-	0.82	0.68	0.47	-	0.82	0.69	0.48	-
		ΔT	19	17	13	-	20	17	13	-	20	17	13	-	20	17	13	-	20	17	13	-	18	16	12	-
		kW	3.96	4.04	4.17	-	4.26	4.35	4.49	-	4.53	4.63	4.78	-	4.76	4.87	5.03	-	4.97	5.08	5.24	-	5.14	5.25	5.43	-
		Amps	18.7	19.1	19.5	-	19.9	20.3	20.8	-	21.3	21.7	22.3	-	22.5	22.9	23.6	-	23.7	24.1	24.8	-	24.8	25.3	26.1	-
		Hi PR	231	248	262	-	259	278	294	-	294	317	334	-	335	361	381	-	377	406	428	-	417	448	473	-
		Lo PR	108	115	126	-	114	122	133	-	119	126	138	-	125	133	145	-	131	139	152	-	135	144	157	-
	1625	MBh	50.5	52.3	57.3	-	49.3	51.1	56.0	-	48.1	49.9	54.7	-	47.0	48.7	53.3	-	44.6	46.2	50.7	-	41.3	42.8	46.9	-
		S/T	0.69	0.58	0.40	-	0.72	0.60	0.41	-	0.73	0.61	0.42	-	0.76	0.63	0.44	-	0.79	0.66	0.45	-	0.79	0.66	0.46	-
		ΔT	20	17	13	-	20	17	13	-	20	17	13	-	20	17	13	-	20	17	13	-	19	16	12	-
		kW	3.86	3.94	4.07	-	4.16	4.24	4.38	-	4.42	4.51	4.66	-	4.65	4.75	4.90	-	4.84	4.95	5.11	-	5.01	5.12	5.29	-
		Amps	18.3	18.6	19.1	-	19.5	19.8	20.4	-	20.8	21.2	21.8	-	22.0	22.4	23.0	-	23.1	23.6	24.2	-	24.2	24.7	25.4	-
		Hi PR	224	241	254	-	251	270	285	-	285	307	324	-	325	350	369	-	366	394	416	-	404	435	459	-
		Lo PR	105	112	122	-	111	118	129	-	115	123	134	-	121	129	141	-	127	135	147	-	131	140	152	-
75	2085	MBh	57.3	59.0	63.9	68.5	56.0	57.6	62.4	66.9	54.6	56.3	60.9	65.3	53.3	54.9	59.4	63.8	50.6	52.1	56.4	60.6	46.9	48.3	52.3	56.1
		S/T	0.85	0.76	0.58	0.37	0.88	0.79	0.60	0.39	0.91	0.81	0.61	0.39	0.94	0.84	0.63	0.41	0.97	0.87	0.66	0.42	0.98	0.88	0.66	0.43
		ΔT	22	20	16	11	22	20	16	11	22	20	16	11	22	20	17	11	22	20	16	11	20	19	15	11
		kW	4.02	4.10	4.23	4.37	4.33	4.42	4.56	4.71	4.60	4.70	4.86	5.02	4.84	4.95	5.11	5.29	5.05	5.16	5.33	5.51	5.23	5.34	5.52	5.71
		Amps	19.0	19.3	19.8	20.4	20.2	20.6	21.1	21.8	21.6	22.0	22.6	23.3	22.8	23.3	23.9	24.7	24.0	24.5	25.2	26.0	25.2	25.8	26.5	27.4
		Hi PR	235	253	267	279	264	284	300	313	300	323	341	356	342	368	389	405	385	414	437	456	425	457	483	504
		Lo PR	110	117	128	137	117	124	136	144	121	129	141	150	127	136	148	158	133	142	155	165	138	147	160	171
	1850	MBh	55.6	57.3	62.0	66.5	54.3	55.9	60.6	65.0	53.0	54.6	59.1	63.4	51.8	**53.3**	57.7	61.9	49.2	50.6	54.8	58.8	45.5	46.9	50.8	54.5
		S/T	0.81	0.73	0.55	0.35	0.84	0.75	0.57	0.37	0.86	0.77	0.59	0.38	0.89	**0.80**	0.60	0.39	0.93	0.83	0.63	0.40	0.93	0.84	0.63	0.41
		ΔT	22	21	17	12	23	21	17	12	23	21	17	12	23	**21**	17	12	23	21	17	12	21	19	16	11
		kW	3.99	4.07	4.20	4.34	4.29	4.39	4.53	4.68	4.57	4.66	4.82	4.98	4.80	**4.91**	5.07	5.24	5.01	5.12	5.29	5.47	5.18	5.30	5.48	5.66
		Amps	18.8	19.2	19.7	20.3	20.0	20.4	21.0	21.6	21.4	21.9	22.5	23.2	22.6	**23.1**	23.7	24.5	23.8	24.3	25.0	25.8	25.0	25.5	26.3	27.1
		Hi PR	233	251	265	276	261	281	297	310	297	320	338	352	339	**364**	385	401	381	410	433	451	421	453	478	499
		Lo PR	109	116	127	135	116	123	134	143	120	128	139	149	126	**134**	146	156	132	141	154	163	137	145	159	169
	1625	MBh	51.3	52.9	57.2	61.4	50.2	51.6	55.9	60.0	49.0	50.4	54.6	58.6	47.8	49.2	53.2	57.1	45.4	46.7	50.6	54.3	42.0	43.3	46.8	50.3
		S/T	0.78	0.70	0.53	0.34	0.81	0.73	0.55	0.35	0.83	0.75	0.56	0.36	0.86	0.77	0.58	0.37	0.89	0.80	0.60	0.39	0.90	0.81	0.61	0.39
		ΔT	23	21	17	12	23	21	17	12	23	21	17	12	23	21	18	12	23	21	17	12	21	20	16	11
		kW	3.89	3.97	4.10	4.23	4.19	4.28	4.42	4.56	4.45	4.55	4.70	4.85	4.68	4.79	4.94	5.11	4.88	4.99	5.15	5.33	5.05	5.16	5.34	5.52
		Amps	18.4	18.8	19.3	19.8	19.6	20.0	20.5	21.1	21.0	21.4	21.9	22.6	22.1	22.6	23.2	23.9	23.3	23.8	24.4	25.2	24.4	24.9	25.7	26.5
		Hi PR	226	243	257	268	254	273	288	301	288	310	328	342	328	353	373	389	369	398	420	438	408	439	464	484
		Lo PR	106	113	123	131	112	119	130	139	116	124	135	144	122	130	142	151	128	136	149	159	133	141	154	164

IDB: Entering Indoor Dry Bulb Temperature

Shaded area reflects ACCA (TVA) conditions

kW = Total system power

High and low pressures are measured at the liquid and suction service valves.

Amps = outdoor unit amps (comp.+fan)

Expanded Cooling Data — GPC1360H41BA (cont.)

			Outdoor Ambient Temperature																							
			65ºF				75ºF				85ºF				95ºF				105ºF				115ºF			
			Entering Indoor Wet Bulb Temperature																							
IDB	Airflow		59	63	67	71	59	63	67	71	59	63	67	71	59	63	67	71	59	63	67	71	59	63	67	71
80	2085	MBh	58.3	59.6	63.7	68.1	57.0	58.2	62.2	66.5	55.6	56.8	60.7	64.9	54.3	55.4	59.2	63.3	51.5	52.7	56.3	60.1	47.7	48.8	52.1	55.7
		S/T	0.94	0.88	0.71	0.53	0.97	0.91	0.74	0.55	1.00	0.93	0.76	0.57	1.00	0.96	0.78	0.59	1.00	1.00	0.81	0.61	1.00	1.00	0.82	0.61
		ΔT	24	23	20	16	24	23	20	16	25	23	20	16	24	24	20	16	23	23	20	16	21	22	19	15
		kW	4.05	4.14	4.27	4.41	4.36	4.46	4.60	4.75	4.64	4.74	4.90	5.06	4.88	4.99	5.16	5.33	5.09	5.21	5.38	5.56	5.27	5.39	5.57	5.76
		Amps	19.1	19.5	20.0	20.6	20.3	20.7	21.3	21.9	21.8	22.2	22.8	23.5	23.0	23.5	24.1	24.9	24.2	24.7	25.4	26.2	25.4	26.0	26.7	27.6
		Hi PR	238	256	270	282	267	287	303	316	303	326	345	359	345	372	393	409	389	418	442	461	429	462	488	509
		Lo PR	112	119	130	138	118	125	137	146	122	130	142	152	129	137	149	159	135	143	157	167	139	148	162	173
	1850	MBh	56.6	57.9	61.8	66.1	55.3	56.5	60.4	64.5	54.0	55.2	58.9	63.0	52.7	53.8	**57.5**	61.5	50.0	51.1	54.6	58.4	46.3	47.4	50.6	54.1
		S/T	0.89	0.84	0.68	0.51	0.92	0.87	0.71	0.53	0.95	0.89	0.72	0.54	0.98	0.92	**0.75**	0.56	1.00	0.95	0.78	0.58	1.00	0.96	0.78	0.58
		ΔT	25	24	21	17	25	24	21	17	25	24	21	17	26	25	**21**	17	25	24	21	17	23	23	20	16
		kW	4.02	4.10	4.23	4.37	4.33	4.42	4.57	4.72	4.60	4.70	4.86	5.02	4.84	4.95	**5.12**	5.29	5.05	5.16	5.33	5.51	5.23	5.34	5.52	5.71
		Amps	19.0	19.3	19.8	20.4	20.2	20.6	21.1	21.8	21.6	22.0	22.6	23.3	22.8	23.3	**23.9**	24.7	24.0	24.5	25.2	26.0	25.2	25.8	26.5	27.4
		Hi PR	235	253	267	279	264	284	300	313	300	323	341	356	342	368	**389**	405	385	414	437	456	425	457	483	504
		Lo PR	110	117	128	137	117	124	136	144	121	129	141	150	127	136	**148**	158	133	142	155	165	138	147	160	171
	1625	MBh	52.3	53.4	57.1	61.0	51.0	52.2	55.7	59.6	49.8	50.9	54.4	58.2	48.6	49.7	53.1	56.7	46.2	47.2	50.4	53.9	42.8	43.7	46.7	49.9
		S/T	0.86	0.81	0.66	0.49	0.89	0.84	0.68	0.51	0.91	0.86	0.70	0.52	0.94	0.89	0.72	0.54	0.98	0.92	0.75	0.56	0.99	0.93	0.75	0.56
		ΔT	25	24	21	17	26	25	21	17	26	25	21	17	26	25	22	17	26	25	21	17	24	23	20	16
		kW	3.92	4.01	4.13	4.26	4.22	4.31	4.45	4.60	4.49	4.59	4.74	4.89	4.72	4.83	4.99	5.15	4.92	5.03	5.20	5.37	5.09	5.21	5.38	5.56
		Amps	18.6	18.9	19.4	20.0	19.7	20.1	20.7	21.3	21.1	21.5	22.1	22.8	22.3	22.7	23.4	24.1	23.5	23.9	24.6	25.4	24.6	25.1	25.9	26.7
		Hi PR	228	246	259	271	256	276	291	304	291	313	331	345	332	357	377	393	373	402	424	442	412	444	469	489
		Lo PR	107	114	124	133	113	120	131	140	118	125	137	146	124	131	144	153	129	138	150	160	134	142	156	166
85	2085	MBh	59.3	60.5	63.3	67.6	58.0	59.1	61.9	66.0	56.6	57.7	60.4	64.4	55.2	56.3	58.9	62.9	52.4	53.5	56.0	59.7	48.6	49.5	51.9	55.3
		S/T	0.98	0.95	0.85	0.69	1.00	0.98	0.89	0.72	1.00	1.00	0.91	0.74	1.00	1.00	0.94	0.76	1.00	1.00	0.97	0.79	1.00	1.00	0.98	0.80
		ΔT	26	25	24	21	26	26	24	21	25	25	24	21	24	25	24	21	23	24	24	21	21	22	22	19
		kW	4.08	4.17	4.30	4.44	4.40	4.50	4.64	4.79	4.68	4.78	4.94	5.10	4.93	5.03	5.20	5.38	5.13	5.25	5.42	5.61	5.32	5.44	5.62	5.81
		Amps	19.2	19.6	20.1	20.7	20.5	20.9	21.4	22.1	21.9	22.4	23.0	23.7	23.2	23.6	24.3	25.1	24.4	24.9	25.6	26.4	25.6	26.2	26.9	27.8
		Hi PR	240	258	273	284	269	290	306	319	306	330	348	363	349	375	396	414	392	422	446	465	434	467	493	514
		Lo PR	113	120	131	139	119	127	138	147	124	132	144	153	130	138	151	161	136	145	158	168	141	150	164	174
	1850	MBh	57.6	58.7	61.5	65.6	56.3	57.4	60.1	64.1	54.9	56.0	58.6	62.6	53.6	54.6	57.2	61.0	50.9	51.9	54.4	58.0	47.2	48.1	50.3	53.7
		S/T	0.94	0.90	0.81	0.66	0.97	0.94	0.84	0.69	0.99	0.96	0.87	0.70	1.00	0.99	0.89	0.73	1.00	1.00	0.93	0.75	1.00	1.00	0.94	0.76
		ΔT	27	26	25	22	27	27	25	22	27	27	25	22	27	27	25	22	25	26	25	22	23	24	23	20
		kW	4.05	4.14	4.27	4.41	4.36	4.46	4.60	4.75	4.64	4.74	4.90	5.06	4.88	4.99	5.16	5.33	5.09	5.21	5.38	5.56	5.27	5.39	5.57	5.76
		Amps	19.1	19.5	20.0	20.6	20.3	20.7	21.3	21.9	21.8	22.2	22.8	23.5	23.0	23.5	24.1	24.9	24.2	24.7	25.4	26.2	25.4	26.0	26.7	27.6
		Hi PR	238	256	270	282	267	287	303	316	303	326	345	359	345	372	393	409	389	418	442	461	429	462	488	509
		Lo PR	112	119	130	138	118	125	137	146	122	130	142	152	129	137	149	159	135	143	157	167	139	148	162	173
	1625	MBh	53.2	54.2	56.8	60.6	51.9	52.9	55.4	59.2	50.7	51.7	54.1	57.7	49.5	50.4	52.8	56.3	47.0	47.9	50.2	53.5	43.5	44.4	46.5	49.6
		S/T	0.90	0.87	0.79	0.64	0.93	0.90	0.81	0.66	0.96	0.93	0.83	0.68	0.99	0.95	0.86	0.70	1.00	0.99	0.89	0.73	1.00	1.00	0.90	0.73
		ΔT	27	27	25	22	27	27	26	22	28	27	26	22	28	27	26	22	27	27	25	22	25	25	24	21
		kW	3.95	4.04	4.17	4.30	4.26	4.35	4.49	4.64	4.53	4.62	4.78	4.93	4.76	4.87	5.03	5.20	4.96	5.07	5.24	5.42	5.14	5.25	5.43	5.61
		Amps	18.7	19.0	19.5	20.1	19.9	20.3	20.8	21.4	21.3	21.7	22.3	23.0	22.5	22.9	23.5	24.3	23.6	24.1	24.8	25.6	24.8	25.3	26.1	26.9
		Hi PR	231	248	262	273	259	278	294	307	294	317	334	349	335	361	381	397	377	406	428	447	416	448	473	494
		Lo PR	108	115	126	134	114	122	133	141	119	126	138	147	125	133	145	154	131	139	152	162	135	144	157	167

IDB: Entering Indoor Dry Bulb Temperature

Shaded area reflects AHRI (TVA) conditions.

kW = Total system power

High and low pressures are measured at the liquid and suction service valves.

Amps = outdoor unit amps (comp.+fan)

Expanded Cooling Data — GPC1360H41BC

			Outdoor Ambient Temperature																							
			65ºF				75ºF				85ºF				95ºF				105ºF				115ºF			
			Entering Indoor Wet Bulb Temperature																							
IDB	Airflow		59	63	67	71	59	63	67	71	59	63	67	71	59	63	67	71	59	63	67	71	59	63	67	71
70	1948	MBh	56.3	58.4	64.0	-	55.0	57.0	62.5	-	53.7	55.7	61.0	-	52.4	54.3	59.5	-	49.8	51.6	56.5	-	46.1	47.8	52.4	-
		S/T	0.71	0.59	0.41	-	0.74	0.62	0.43	-	0.76	0.63	0.44	-	0.78	0.65	0.45	-	0.81	0.68	0.47	-	0.82	0.68	0.47	-
		ΔT	19	16	12	-	19	17	13	-	19	17	13	-	19	17	13	-	19	16	13	-	18	15	12	-
		kW	4.17	4.26	4.39	-	4.49	4.59	4.73	-	4.77	4.88	5.03	-	5.02	5.13	5.30	-	5.23	5.35	5.53	-	5.41	5.54	5.72	-
		Amps	17.6	17.9	18.4	-	18.8	19.2	19.8	-	20.2	20.7	21.3	-	21.5	22.0	22.6	-	22.7	23.2	23.9	-	24.0	24.5	25.2	-
		HI PR	249	268	283	-	279	300	317	-	317	341	361	-	361	389	411	-	407	438	462	-	449	483	510	-
		LO PR	109	116	127	-	116	123	134	-	120	128	140	-	126	134	147	-	132	141	154	-	137	146	159	-
	1728	MBh	54.7	56.7	62.1	-	53.4	55.4	60.7	-	52.2	54.1	59.2	-	50.9	52.7	57.8	-	48.3	50.1	54.9	-	44.8	46.4	50.9	-
		S/T	0.68	0.57	0.39	-	0.70	0.59	0.41	-	0.72	0.60	0.42	-	0.75	0.62	0.43	-	0.77	0.65	0.45	-	0.78	0.65	0.45	-
		ΔT	20	17	13	-	20	17	13	-	20	17	13	-	20	17	13	-	20	17	13	-	19	16	12	-
		kW	4.14	4.22	4.36	-	4.45	4.55	4.69	-	4.73	4.84	4.99	-	4.98	5.09	5.26	-	5.19	5.30	5.48	-	5.37	5.49	5.67	-
		Amps	17.4	17.8	18.3	-	18.7	19.0	19.6	-	20.1	20.5	21.1	-	21.3	21.8	22.4	-	22.5	23.0	23.7	-	23.8	24.3	25.0	-
		HI PR	246	265	280	-	276	297	314	-	314	338	357	-	358	385	407	-	403	433	457	-	445	479	505	-
		LO PR	108	115	126	-	114	122	133	-	119	127	138	-	125	133	145	-	131	139	152	-	135	144	157	-
	1518	MBh	50.5	52.3	57.3	-	49.3	51.1	56.0	-	48.1	49.9	54.7	-	47.0	48.7	53.3	-	44.6	46.2	50.7	-	41.3	42.8	46.9	-
		S/T	0.65	0.55	0.38	-	0.68	0.57	0.39	-	0.70	0.58	0.40	-	0.72	0.60	0.42	-	0.75	0.62	0.43	-	0.75	0.63	0.44	-
		ΔT	20	17	13	-	20	18	13	-	20	18	13	-	20	18	13	-	20	17	13	-	19	16	12	-
		kW	4.04	4.12	4.25	-	4.35	4.44	4.58	-	4.62	4.72	4.87	-	4.86	4.96	5.12	-	5.06	5.17	5.34	-	5.23	5.35	5.53	-
		Amps	17.0	17.4	17.9	-	18.2	18.6	19.1	-	19.6	20.0	20.6	-	20.8	21.2	21.9	-	22.0	22.5	23.1	-	23.1	23.7	24.4	-
		HI PR	239	257	271	-	268	288	304	-	305	328	346	-	347	374	394	-	390	420	444	-	431	464	490	-
		LO PR	105	112	122	-	111	118	129	-	115	123	134	-	121	129	141	-	127	135	148	-	131	140	153	-
75	1948	MBh	57.3	59.0	63.9	68.5	56.0	57.6	62.4	66.9	54.6	56.3	60.9	65.3	53.3	54.9	59.4	63.8	50.6	52.1	56.4	60.6	46.9	48.3	52.3	56.1
		S/T	0.81	0.72	0.55	0.35	0.84	0.75	0.57	0.37	0.86	0.77	0.58	0.37	0.89	0.79	0.60	0.39	0.92	0.82	0.62	0.40	0.93	0.83	0.63	0.40
		ΔT	22	20	17	11	22	20	17	12	22	20	17	12	22	21	17	12	22	20	17	11	21	19	16	11
		kW	4.20	4.29	4.43	4.57	4.53	4.62	4.77	4.93	4.81	4.92	5.08	5.24	5.06	5.17	5.34	5.52	5.28	5.39	5.57	5.76	5.46	5.58	5.77	5.97
		Amps	17.7	18.1	18.6	19.2	19.0	19.4	19.9	20.6	20.4	20.9	21.5	22.2	21.7	22.1	22.8	23.6	22.9	23.4	24.1	25.0	24.2	24.7	25.5	26.4
		HI PR	251	270	285	298	282	303	320	334	321	345	364	380	365	393	415	433	411	442	467	487	454	488	516	538
		LO PR	111	118	128	137	117	124	136	144	121	129	141	150	128	136	148	158	134	142	155	165	138	147	161	171
	1728	MBh	55.6	57.3	62.0	66.5	54.3	55.9	60.6	65.0	53.0	54.6	59.1	63.4	51.8	**53.3**	57.7	61.9	49.2	50.6	54.8	58.8	45.5	46.9	50.8	54.5
		S/T	0.77	0.69	0.52	0.34	0.80	0.72	0.54	0.35	0.82	0.73	0.56	0.36	0.85	**0.76**	0.57	0.37	0.88	0.79	0.60	0.38	0.89	0.79	0.60	0.39
		ΔT	23	21	17	12	23	21	17	12	23	21	17	12	23	**21**	18	12	23	21	17	12	21	20	16	11
		kW	4.17	4.26	4.39	4.53	4.49	4.59	4.73	4.89	4.77	4.88	5.03	5.20	5.02	**5.13**	5.30	5.48	5.23	5.35	5.53	5.71	5.42	5.54	5.72	5.92
		Amps	17.6	17.9	18.4	19.0	18.8	19.2	19.8	20.4	20.2	20.7	21.3	22.0	21.5	**22.0**	22.6	23.4	22.7	23.2	23.9	24.8	24.0	24.5	25.2	26.1
		HI PR	249	268	283	295	279	300	317	331	317	342	361	376	361	**389**	411	428	407	438	462	482	449	484	511	533
		LO PR	109	116	127	135	116	123	134	143	120	128	140	149	126	**134**	147	156	132	141	154	164	137	146	159	169
	1518	MBh	51.3	52.9	57.2	61.4	50.2	51.6	55.9	60.0	49.0	50.4	54.6	58.6	47.8	49.2	53.2	57.1	45.4	46.7	50.6	54.3	42.0	43.3	46.8	50.3
		S/T	0.74	0.67	0.50	0.32	0.77	0.69	0.52	0.34	0.79	0.71	0.54	0.34	0.82	0.73	0.55	0.36	0.85	0.76	0.57	0.37	0.85	0.76	0.58	0.37
		ΔT	23	21	17	12	23	22	18	12	23	22	18	12	24	22	18	12	23	21	18	12	22	20	16	11
		kW	4.07	4.16	4.29	4.42	4.38	4.47	4.62	4.77	4.66	4.76	4.91	5.07	4.90	5.00	5.17	5.34	5.10	5.21	5.39	5.57	5.28	5.40	5.58	5.76
		Amps	17.1	17.5	18.0	18.6	18.4	18.7	19.3	19.9	19.7	20.2	20.8	21.5	21.0	21.4	22.1	22.8	22.2	22.6	23.3	24.1	23.3	23.9	24.6	25.5
		HI PR	241	260	274	286	271	291	308	321	308	331	350	365	351	377	398	416	394	424	448	468	436	469	495	517
		LO PR	106	113	123	131	112	119	130	139	117	124	135	144	122	130	142	151	128	137	149	159	133	141	154	164

IDB: Entering Indoor Dry Bulb Temperature
High and low pressures are measured at the liquid and suction service valves.

Shaded area reflects ACCA (TVA) conditions

kW = Total system power
Amps = outdoor unit amps (comp.+fan)

Expanded Cooling Data — GPC1360H41BC (cont.)

			Outdoor Ambient Temperature																							
			65ºF				75ºF				85ºF				95ºF				105ºF				115ºF			
			Entering Indoor Wet Bulb Temperature																							
IDB	Airflow		59	63	67	71	59	63	67	71	59	63	67	71	59	63	67	71	59	63	67	71	59	63	67	71
80	1948	MBh	58.3	59.6	63.7	68.1	57.0	58.2	62.2	66.5	55.6	56.8	60.7	64.9	54.3	55.4	59.2	63.3	51.5	52.7	56.3	60.1	47.7	48.8	52.1	55.7
		S/T	0.89	0.83	0.68	0.51	0.92	0.86	0.70	0.52	0.94	0.88	0.72	0.54	1.00	0.91	0.74	0.56	1.00	0.95	0.77	0.58	1.00	0.96	0.78	0.58
		ΔT	24	23	20	16	25	24	21	16	25	24	21	16	26	24	21	17	24	24	20	16	23	22	19	15
		kW	4.24	4.33	4.46	4.61	4.56	4.66	4.81	4.97	4.85	4.96	5.12	5.29	5.11	5.22	5.39	5.57	5.32	5.44	5.62	5.81	5.51	5.63	5.82	6.02
		Amps	17.8	18.2	18.7	19.4	19.1	19.5	20.1	20.8	20.6	21.0	21.7	22.4	21.8	22.3	23.0	23.8	23.1	23.6	24.4	25.2	24.4	24.9	25.7	26.6
		HI PR	254	273	288	301	285	306	324	337	324	348	368	384	369	397	419	437	415	446	471	492	458	493	521	543
		LO PR	112	119	130	138	118	126	137	146	123	130	142	152	129	137	150	159	135	144	157	167	140	149	162	173
	1728	MBh	56.6	57.9	61.8	66.1	55.3	56.5	60.4	64.5	54.0	55.2	58.9	63.0	52.7	53.8	**57.5**	61.5	50.0	51.1	54.6	58.4	46.3	47.4	50.6	54.1
		S/T	0.85	0.79	0.65	0.48	0.88	0.82	0.67	0.50	0.90	0.84	0.69	0.51	0.93	0.87	**0.71**	0.53	0.96	0.90	0.74	0.55	0.97	0.91	0.74	0.55
		ΔT	26	24	21	17	26	25	22	17	26	25	22	17	26	25	**22**	17	26	25	21	17	24	23	20	16
		kW	4.20	4.29	4.43	4.57	4.53	4.62	4.77	4.93	4.81	4.92	5.08	5.24	5.06	5.17	**5.35**	5.52	5.28	5.39	5.57	5.76	5.46	5.58	5.77	5.97
		Amps	17.7	18.1	18.6	19.2	19.0	19.4	19.9	20.6	20.4	20.9	21.5	22.2	21.7	22.1	**22.8**	23.6	22.9	23.4	24.1	25.0	24.2	24.7	25.5	26.4
		HI PR	251	270	285	298	282	303	320	334	321	345	364	380	365	393	**415**	433	411	442	467	487	454	488	516	538
		LO PR	111	118	128	137	117	124	136	144	121	129	141	150	128	136	**148**	158	134	142	155	165	138	147	161	171
	1518	MBh	52.3	53.4	57.1	61.0	51.0	52.2	55.7	59.6	49.8	50.9	54.4	58.2	48.6	49.7	53.1	56.7	46.2	47.2	50.4	53.9	42.8	43.7	46.7	49.9
		S/T	0.82	0.77	0.62	0.47	0.85	0.79	0.65	0.48	0.87	0.81	0.66	0.50	0.90	0.84	0.68	0.51	0.93	0.87	0.71	0.53	0.94	0.88	0.72	0.53
		ΔT	26	25	22	17	26	25	22	17	26	25	22	17	26	25	22	18	26	25	22	17	24	23	20	16
		kW	4.10	4.19	4.32	4.46	4.42	4.51	4.66	4.81	4.69	4.80	4.95	5.11	4.94	5.05	5.21	5.38	5.14	5.26	5.43	5.61	5.32	5.44	5.62	5.81
		Amps	17.3	17.6	18.1	18.7	18.5	18.9	19.4	20.1	19.9	20.3	20.9	21.6	21.1	21.6	22.2	23.0	22.3	22.8	23.5	24.3	23.5	24.1	24.8	25.7
		HI PR	244	262	277	289	273	294	311	324	311	335	353	369	354	381	402	420	398	429	453	472	440	474	500	522
		LO PR	107	114	125	133	113	121	132	140	118	125	137	146	124	132	144	153	130	138	151	160	134	143	156	166
85	1948	MBh	59.3	60.5	63.3	67.6	58.0	59.1	61.9	66.0	56.6	57.7	60.4	64.4	55.2	56.3	58.9	62.9	52.4	53.5	56.0	59.7	48.6	49.5	51.9	55.3
		S/T	0.93	0.90	0.81	0.66	0.96	0.93	0.84	0.68	0.99	0.95	0.86	0.70	1.00	0.99	0.89	0.72	1.00	1.00	0.92	0.75	1.00	1.00	0.93	0.75
		ΔT	26	26	24	21	26	26	25	21	26	26	25	21	26	26	25	21	25	25	24	21	23	23	23	20
		kW	4.27	4.36	4.50	4.64	4.60	4.70	4.85	5.01	4.89	5.00	5.16	5.33	5.15	5.26	5.43	5.62	5.37	5.49	5.67	5.86	5.55	5.68	5.87	6.07
		Amps	18.0	18.4	18.9	19.5	19.3	19.7	20.3	20.9	20.7	21.2	21.8	22.6	22.0	22.5	23.2	24.0	23.3	23.8	24.6	25.4	24.6	25.1	25.9	26.8
		HI PR	256	276	291	304	288	309	327	341	327	352	372	388	372	401	423	441	419	451	476	497	463	498	526	549
		LO PR	113	120	131	139	119	127	138	147	124	132	144	153	130	138	151	161	136	145	158	169	141	150	164	174
	1728	MBh	57.6	58.7	61.5	65.6	56.3	57.4	60.1	64.1	54.9	56.0	58.6	62.6	53.6	54.6	57.2	61.0	50.9	51.9	54.4	58.0	47.2	48.1	50.3	53.7
		S/T	0.89	0.86	0.77	0.63	0.92	0.89	0.80	0.65	0.94	0.91	0.82	0.67	0.97	0.94	0.85	0.69	1.00	0.98	0.88	0.71	1.00	0.98	0.89	0.72
		ΔT	27	27	25	22	28	27	26	22	28	27	26	22	28	27	26	22	27	27	25	22	25	25	24	21
		kW	4.24	4.33	4.46	4.61	4.56	4.66	4.81	4.97	4.85	4.96	5.12	5.29	5.11	5.22	5.39	5.57	5.32	5.44	5.62	5.81	5.51	5.63	5.82	6.02
		Amps	17.8	18.2	18.7	19.4	19.1	19.5	20.1	20.8	20.6	21.0	21.7	22.4	21.8	22.3	23.0	23.8	23.1	23.6	24.4	25.2	24.4	24.9	25.7	26.6
		HI PR	254	273	288	301	285	306	324	337	324	348	368	384	369	397	419	437	415	446	471	492	458	493	521	543
		LO PR	112	119	130	138	118	126	137	146	123	130	142	152	129	137	150	159	135	144	157	167	140	149	162	173
	1518	MBh	53.2	54.2	56.8	60.6	51.9	52.9	55.4	59.2	50.7	51.7	54.1	57.7	49.5	50.4	52.8	56.3	47.0	47.9	50.2	53.5	43.5	44.4	46.5	49.6
		S/T	0.86	0.83	0.75	0.60	0.89	0.86	0.77	0.63	0.91	0.88	0.79	0.64	0.94	0.91	0.82	0.66	0.97	0.94	0.85	0.69	0.98	0.95	0.86	0.69
		ΔT	28	27	26	22	28	27	26	22	28	27	26	22	28	28	26	23	28	27	26	22	26	25	24	21
		kW	4.14	4.22	4.36	4.49	4.45	4.55	4.69	4.85	4.73	4.83	4.99	5.16	4.98	5.09	5.25	5.43	5.19	5.30	5.48	5.66	5.37	5.49	5.67	5.86
		Amps	17.4	17.8	18.3	18.9	18.6	19.0	19.6	20.2	20.1	20.5	21.1	21.8	21.3	21.8	22.4	23.2	22.5	23.0	23.7	24.6	23.7	24.3	25.0	25.9
		HI PR	246	265	280	292	276	297	314	327	314	338	357	372	358	385	406	424	402	433	457	477	445	478	505	527
		LO PR	108	115	126	134	114	122	133	142	119	127	138	147	125	133	145	155	131	139	152	162	135	144	157	168

IDB: Entering Indoor Dry Bulb Temperature
High and low pressures are measured at the liquid and suction service valves.

Shaded area reflects AHRI (TVA) conditions.

kW = Total system power
Amps = outdoor unit amps (comp.+fan)

Airflow Data

Model	Motor Speed	Volts		E.S.P (In. of H_2O)							
				0.1	0.2	0.3	0.4	0.5	0.6	0.7	0.8
GPC13 24H41**	Low	230	CFM	680	640	590	555	505	440	340	-
			Watts	155	150	145	140	130	120	110	-
	Med	230	CFM	895	855	815	755	700	630	545	390
			Watts	230	220	215	205	195	180	170	145
	High	230	CFM	1,185	1,130	1,070	1,010	930	850	760	650
			Watts	350	340	325	310	295	280	265	245
GPC13 30H41**	Low	230	CFM	1,150	1,080	1,025	975	925	845	-	-
			Watts	340	330	315	305	295	280	-	-
	Med	230	CFM	1,335	1,275	1,205	1,135	1,075	985	910	845
			Watts	425	415	400	385	370	350	330	310
	High	230	CFM	1,435	1,355	1,280	1,200	1,120	1,030	950	875
			Watts	485	465	455	435	415	400	385	370
GPC13 36H41**	Low	230	CFM	1,180	1,125	1,075	1,020	955	875	655	-
			Watts	335	325	315	305	295	275	240	-
	Med	230	CFM	1,350	1,280	1,205	1,130	1,050	985	910	845
			Watts	435	420	405	385	375	350	330	310
	High	230	CFM	1,450	1,370	1,290	1,205	1,130	1,040	960	885
			Watts	495	480	465	440	425	400	385	370
GPC13 42H41**/ GPC13 49H41**	Low	230	CFM	1,425	1,410	1,355	1,310	1,245	1,170	1,080	-
			Watts	450	445	430	420	405	390	370	-
	Med	230	CFM	1,620	1,595	1,545	1,485	1,425	1,345	1,250	1,160
			Watts	550	540	525	510	495	475	450	425
	High	230	CFM	1,945	1,935	1,875	1,800	1,730	1,635	1,535	1,440
			Watts	765	755	735	715	695	670	640	615
GPC13 48H41**	Low	230	CFM	1,425	1,410	1,355	1,310	1,245	1,170	1,080	-
			Watts	450	445	430	420	405	390	370	-
	Med	230	CFM	1,720	1,660	1,585	1,520	1,460	1,365	1,270	-
			Watts	560	555	540	530	520	490	470	-
	High	230	CFM	2,110	2,060	1,980	1,895	1,795	1,705	1,590	1,500
			Watts	785	780	765	745	720	705	665	625
GPC13 60H41**	"T" 1 Low	230	CFM	1,775	1,635	1,645	1,515	1,510	1,450	1,430	1,400
			Watts	395	420	435	445	455	465	470	475
	"T" 2 Med	230	CFM	1,845	1,790	1,715	1,685	1,590	1,580	1,530	1,500
			Watts	490	505	520	535	550	560	570	575
	"T" 3 High	230	CFM	2,025	1,900	1,840	1,780	1,725	1,650	1,620	1,580
			Watts	575	595	620	630	645	655	660	670

Notes

- Data shown is dry coil; wet coil pressure drop is approximate.
- 0.1" H_2O, for 2-row indoor coil; 0.2" H_2O, for 3-row indoor coil; and 0.3" H_2O, for 4-row indoor coil
- Data shown does not include filter pressure drop, approx. 0.08" H_2O.
- ALL MODELS SHOULD RUN NO LESS THAN 350 CFM / TON, USE HIGHER SPEED TAP OR NEXT SIZE LARGER BLOWER ASM. See Repair Parts list.
- Reduce airflow by 2% for 208V operation.

Temperature Rise Range Chart

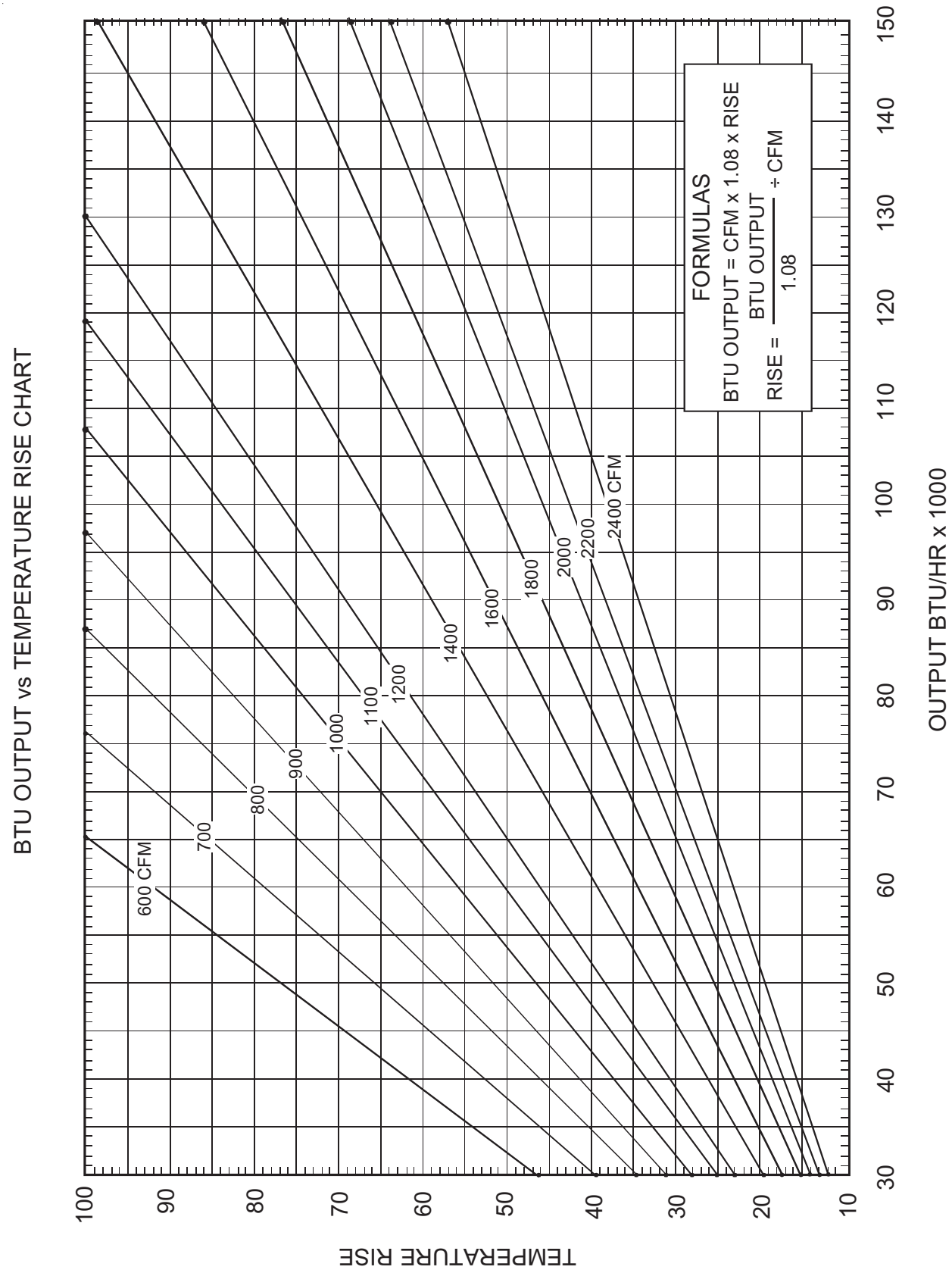

Heat Kit Electrical Data (Blower Only, Heat Mode)

Model & Heat Kit Usage	Circuit #1		Circuit #2		Actual kW / BTU @ 240V
	MCA[1]	MOD[2]	MCA[1]	MOD[2]	
GPC1324H41**	1.5 / 1.5	--	--	--	--
HKR-05*, HKR-05C*	24 / 27	30 / 30	--	--	4.75 / 16,200
HKR-08*, HKR-08C*	33 / 38	40 / 40	--	--	7 / 23,800
HKR-10*, HKR-10C*	45 / 51	60 / 60	--	--	9.5 / 32,400
GPC1330H41**	2.4 / 2.4	--	--	--	--
HKR-05*, HKR-05C*	24 / 27	30 / 30	--	--	4.75 / 16,200
HKR-08*, HKR-08C*	34 / 39	40 / 40	--	--	7 / 23,800
HKR-10*, HKR-10C*	45 / 52	60 / 60	--	--	9.5 / 32,400
HKR-15*, HKR-15C*	45 / 52	60 / 60	22 / 25	30 / 30	14.25 / 48,600
GPC1336H41**	2.4 / 2.4	--	--	--	--
HKR-05*, HKR-05C*	24 / 27	30 / 30	--	--	4.75 / 16,200
HKR-08*, HKR-08C*	34 / 39	40 / 40	--	--	7 / 23,800
HKR-10*, HKR-10C*	45 / 52	60 / 60	--	--	9.5 / 32,400
HKR-15*, HKR-15C*	45 / 52	60 / 60	22 / 25	30 / 30	14.25 / 48,600
GPC1342H41**	3.9 / 3.9	--	--	--	--
HKR-05*, HKR-05C*	25 / 27	30 / 30	--	--	4.75 / 16,200
HKR-08*, HKR-08C*	34 / 39	40 / 40	--	--	7 / 23,800
HKR-10*, HKR-10C*	46 / 52	60 / 60	--	--	9.5 / 32,400
HKR-15*, HKR-15C*	46 / 52	60 / 60	22 / 25	30 / 30	14.25 / 48,600
HKR-20*,HKR-20C*	46 / 52	60 / 60	43 / 49	60 / 60	19.5 / 66,500
GPC1348H41/GPC1349H41****	3.9 / 3.9	--	--	--	--
HKR-05*, HKR-05C*	25 / 28	30 / 30	--	--	4.75 / 16,200
HKR-08*, HKR-08C*	34 / 40	40 / 40	--	--	7 / 23,800
HKR-10*, HKR-10C*	46 / 53	60 / 60	--	--	9.5 / 32,400
HKR-15*, HKR-15C*	46 / 52	60 / 60	22 / 25	30 / 30	14.25 / 48,600
HKR-20*,HKR-20C*	46 / 52	60 / 60	43 / 49	60 / 60	19.5 / 66,500
GPC1360H41**	6.0 / 6.0	--	--	--	--
HKR-05*, HKR-05C*	26 / 30	30 / 30	--	--	4.75 / 16,200
HKR-08*, HKR-08C*	36 / 40	40 / 40	--	--	7 / 23,800
HKR-10*, HKR-10C*	48 / 54	60 / 60	--	--	9.5 / 32,400
HKR-15*, HKR-15C*	48 / 54	60 / 60	22 / 25	30 / 30	14.25 / 48,600
HKR-20*,HKR-20C*	48 / 54	60 / 60	43 / 49	60 / 60	19.5 / 66,500

[1] Minimum Circuit Ampacity @ 208 / 240V

[2] Maximum Overcurrent Protection (amps) @ 208 / 240V

* Indicates revision letter that may or may not be designated

Dimensions

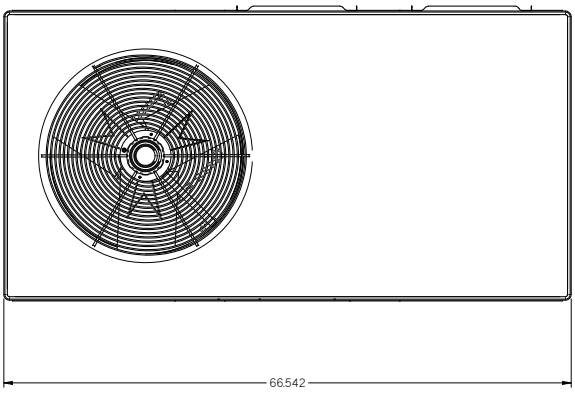

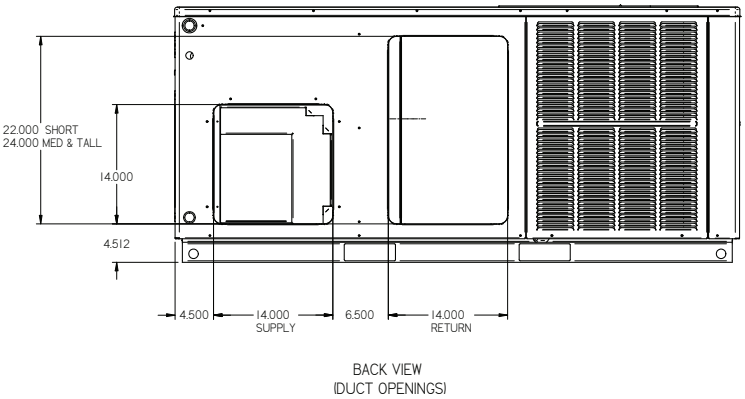

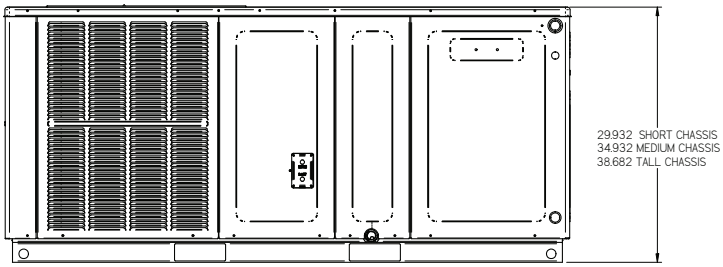

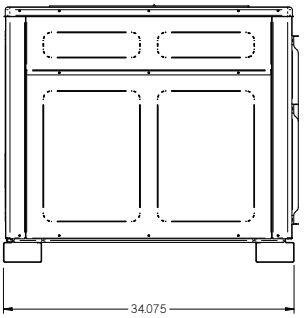

Model	Dimensions			Chassis Size		
	W”	D”	H”	Small	Med.	Large
GPC1324H41**	66½	34	30	X		
GPC1330H41**	66½	34	30	X		
GPC1336H41**	66½	34	35		X	
GPC1342H41**	66½	34	35		X	
GPC1348H41**	66½	34	38⅔			X
GPC1349H41**	66½	34	35		X	
GPC1360H41**	66½	34	38⅔			X

WIRING DIAGRAM — GPC1324-42H41A* / GPC1348H41BA

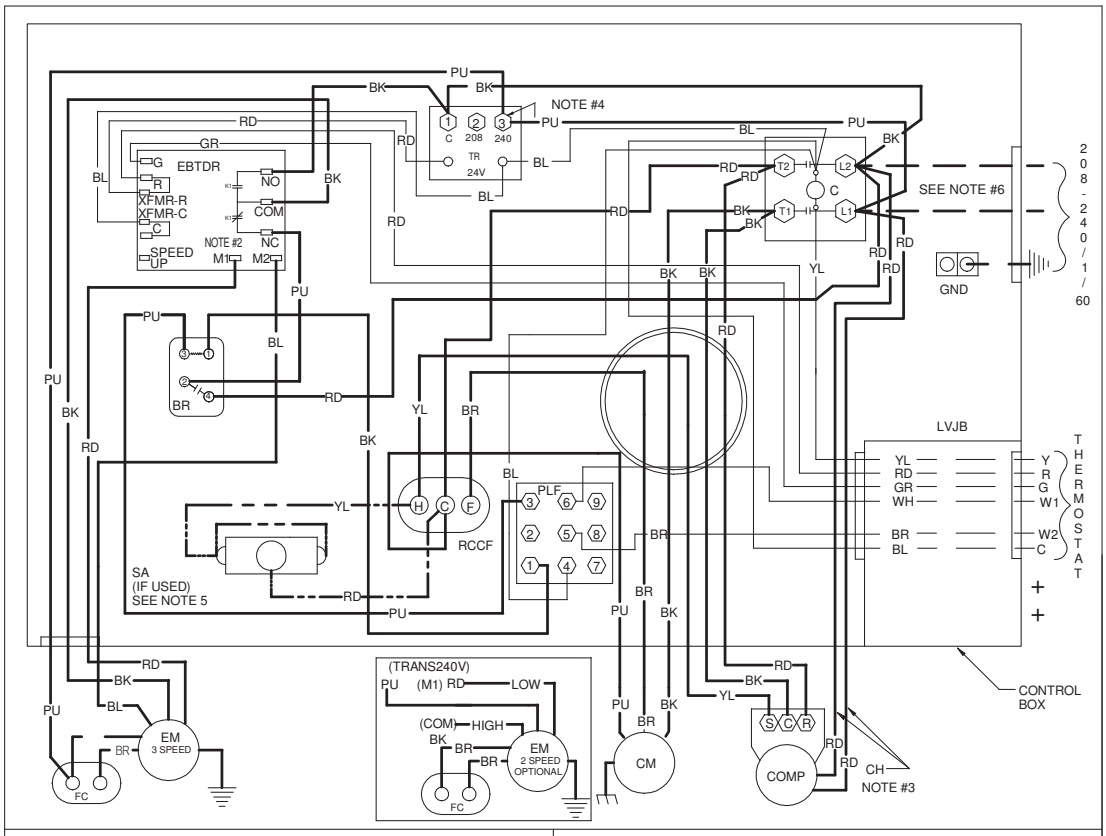

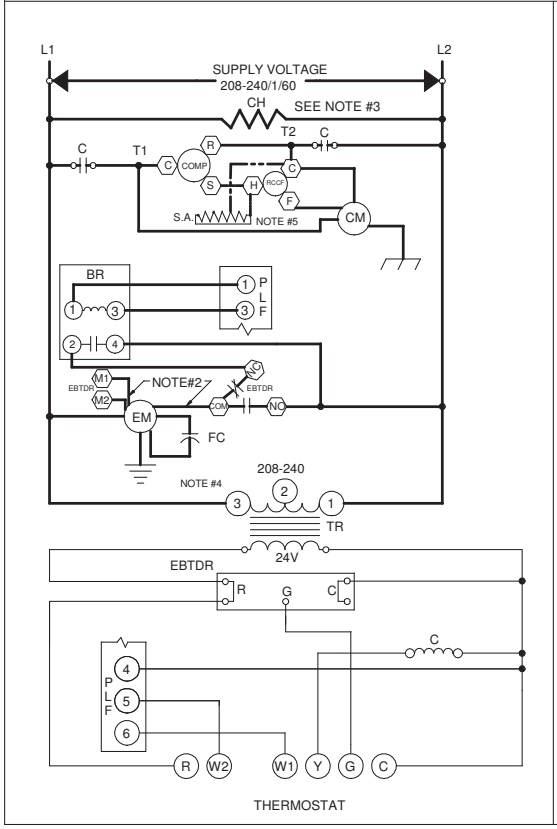

COMPONENT LEGEND

BR	BLOWER INTERLOCK RELAY
C	CONTACTOR
CH	CRACKCASE HEATER
CM	CONDENSER MOTOR
COMP	COMPRESSOR
EBTD	ELECTRONIC BLOWER TIME DELAY
R	RELAY
EM	EVAPORATOR MOTOR
FC	FAN CAPACITOR
GND	EQUIPMENT GROUND
LVJB	LOW VOLTAGE JUNCTION BOX
PLF	FEMALE PLUG / CONNECTOR
RCCF	RUN CAPACITOR FOR COMPRESSOR AND FAN
SA	START ASSIST
TR	TRANSFORMER

FACTORY WIRING
- LINE VOLTAGE
- LOW VOLTAGE
- OPTINAL HIGH VOLTAGE

FIELD WIRING
- HIGH VOLTAGE
- LOW VOLTAGE

WIRE CODE

BK	BLACK
BL	BLUE
BR	BROWN
GR	GREEN
OR	ORANGE
PU	PURPLE
RD	RED
WH	WHITE
YL	YELLOW

NOTES:

1. REPLACEMENT WIRE MUST BE SAME SIZE AND TYPE INSULATION AS ORIGINAL (AT LEAST 105°C) USE COPPER CONDUCTOR ONLY.
2. TO CHANGE EVAPORATOR MOTOR SPEED REPLACE LEAD ON EBTDR "COM" WITH LEAD ON EBTDR "M1" OR "M2"
3. CRANKCASE HEAT NOT SUPPLIED ON ALL UNITS.
4. FOR 208 VOLT TRANSFORMER OPERATION MOVE PURPLE WIRES FROM TERMINAL 3 TERMINAL 2 ON TRANSFORMER.
5. START ASSIST FACTOR EQUIPED WHEN REQUIRED
6. USE COPPER CONDUCTORS ONLY

++ USE N.E.C. CLASS 2 WIRE

SEE UNIT RATING PLATE FOR TYPE AND SIZE OF OVER CURRENT PROTECTION

208-240/1/60 0140G00364 REV. A

WARNING

High Voltage: Disconnect all power before servicing or installing this unit. Multiple power sources may be present. Failure to do so may cause property damage, personal injury, or death.

Wiring is subject to change. Always refer to the wiring diagram or the unit for the most up-to-date wiring.

WIRING DIAGRAM — GPC1336-42H41AC / GPC1349H41AB

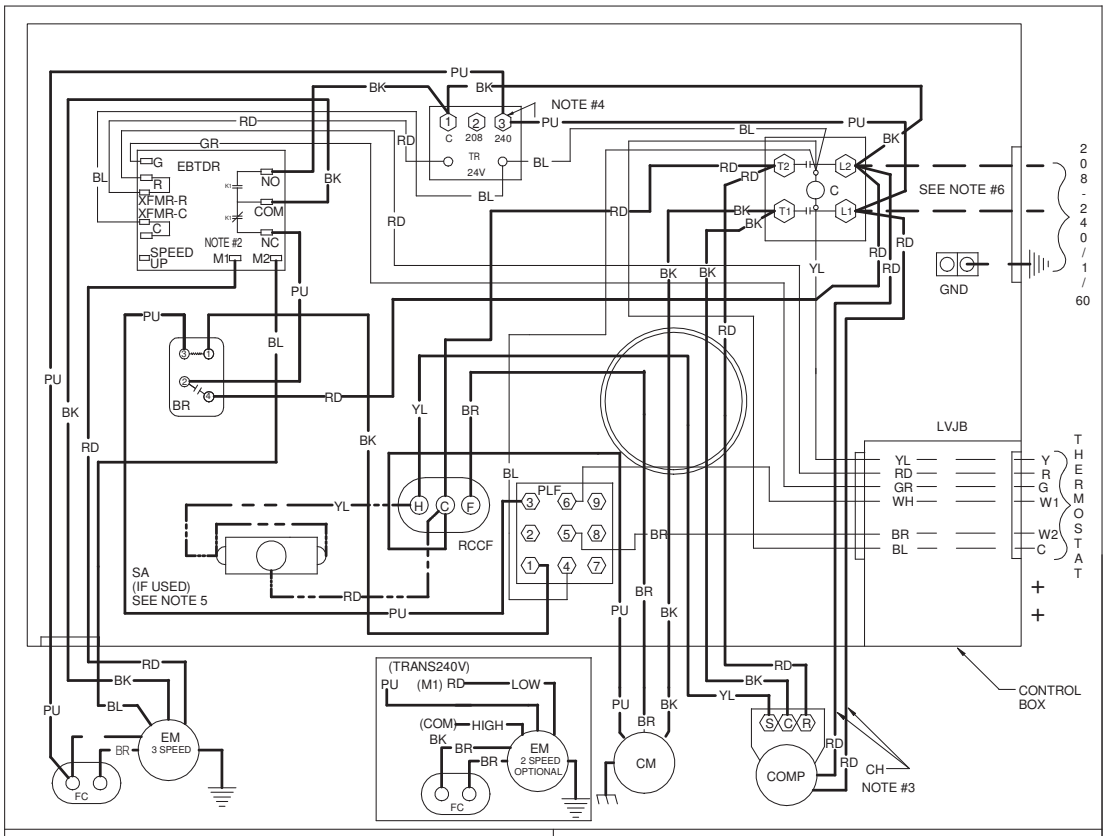

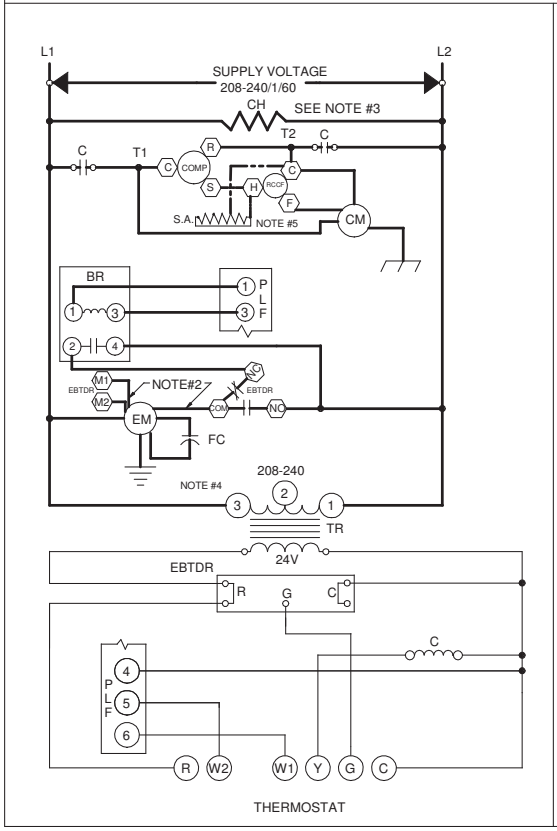

COMPONENT LEGEND

BR	BLOWER INTERLOCK RELAY
C	CONTACTOR
CH	CRACKCASE HEATER
CM	CONDENSER MOTOR
COMP	COMPRESSOR
EBTD	ELECTRONIC BLOWER TIME DELAY
R	RELAY
EM	EVAPORATOR MOTOR
FC	FAN CAPACITOR
GND	EQUIPMENT GROUND
LVJB	LOW VOLTAGE JUNCTION BOX
PLF	FEMALE PLUG / CONNECTOR
RCCF	RUN CAPACITOR FOR COMPRESSOR AND FAN
SA	START ASSIST
TR	TRANSFORMER

FACTORY WIRING
- LINE VOLTAGE
- LOW VOLTAGE
- OPTINAL HIGH VOLTAGE

FIELD WIRING
- HIGH VOLTAGE
- LOW VOLTAGE

WIRE CODE

BK	BLACK
BL	BLUE
BR	BROWN
GR	GREEN
OR	ORANGE
PU	PURPLE
RD	RED
WH	WHITE
YL	YELLOW

NOTES:

1. REPLACEMENT WIRE MUST BE SAME SIZE AND TYPE INSULATION AS ORIGINAL (AT LEAST 105°C) USE COPPER CONDUCTOR ONLY.
2. TO CHANGE EVAPORATOR MOTOR SPEED REPLACE LEAD ON EBTDR "COM" WITH LEAD ON EBTDR "M1" OR "M2"
3. CRANKCASE HEAT NOT SUPPLIED ON ALL UNITS.
4. FOR 208 VOLT TRANSFORMER OPERATION MOVE PURPLE WIRES FROM TERMINAL 3 TERMINAL 2 ON TRANSFORMER.
5. START ASSIST FACTOR EQUIPED WHEN REQUIRED
6. USE COPPER CONDUCTORS ONLY

++ USE N.E.C. CLASS 2 WIRE

SEE UNIT RATING PLATE FOR TYPE AND SIZE OF OVER CURRENT PROTECTION

208-240/1/60 0140G00364 REV. A

WARNING

High Voltage: Disconnect all power before servicing or installing this unit. Multiple power sources may be present. Failure to do so may cause property damage, personal injury, or death.

Wiring is subject to change. Always refer to the wiring diagram or the unit for the most up-to-date wiring.

WIRING DIAGRAM — GPC1360H41BA

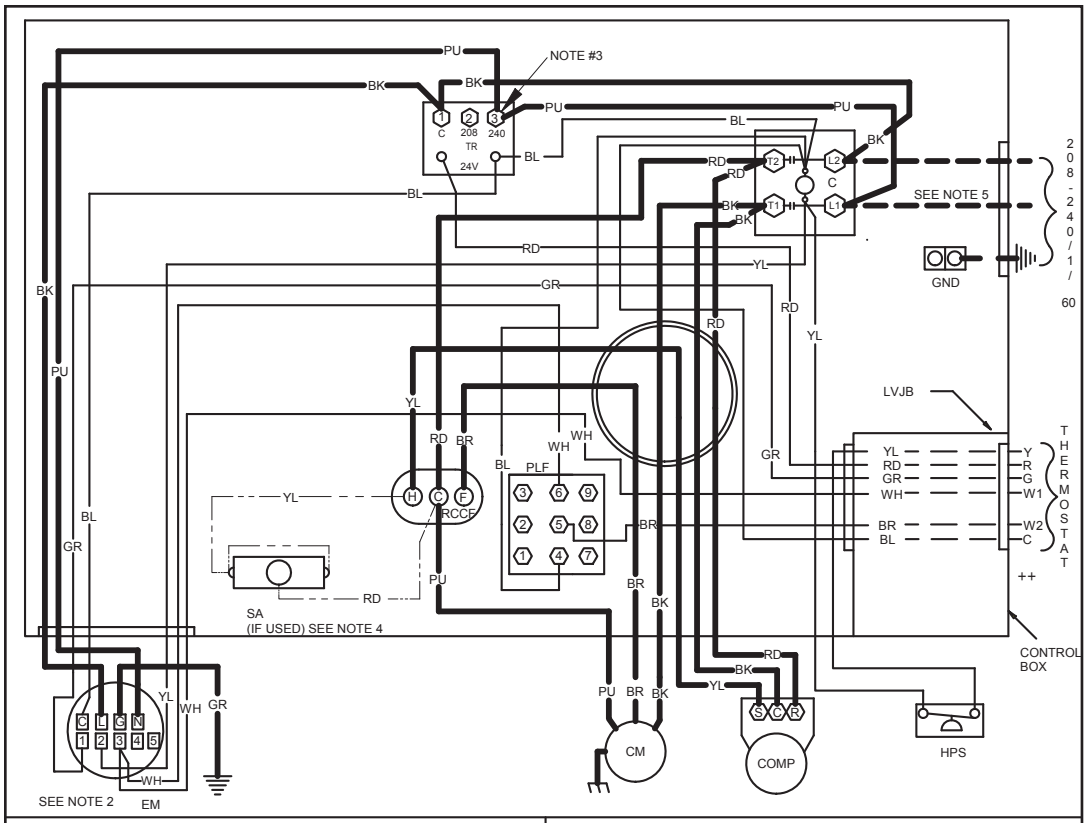

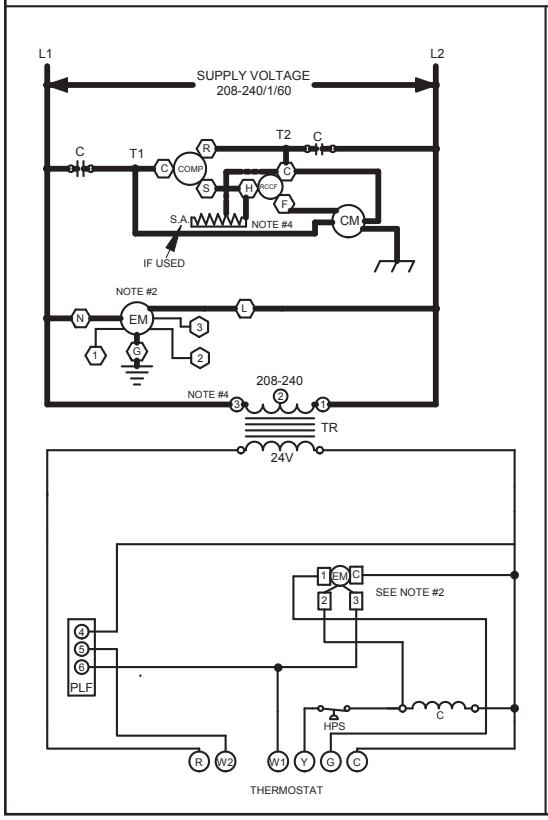

COMPONENT LEGEND

C	CONTACTOR
CM	CONDENSER MOTOR
COMP	COMPRESSOR
EM	EVAPORATOR MOTOR
GND	EQUIPMENT GROUND
LVJB	LOW VOLTAGE JUNCTION BOX
PLF	FEMALE PLUG / CONNECTOR
RCCF	RUN CAPACITOR FOR COMPRESSOR AND FAN
SA	START ASSIST
TR	TRANSFORMER
HPS	HIGH PRESSURE SWITCH

FACTORY WIRING
- LINE VOLTAGE
- LOW VOLTAGE
- OPTINAL HIGH VOLTAGE

FIELD WIRING
- HIGH VOLTAGE
- LOW VOLTAGE

WIRE CODE

BK	BLACK
BL	BLUE
BR	BROWN
GR	GREEN
OR	ORANGE
PU	PURPLE
RD	RED
WH	WHITE
YL	YELLOW

NOTES:

1. REPLACEMENT WIRE MUST BE SAME SIZE AND TYPE INSULATION AS ORIGINAL (AT LEAST 105°C) USE COPPER CONDUCTOR ONLY.
2. TO CHANGE EVAPORATOR MOTOR SPEED MOVE WHITE AND YELLOW LEADS FROM EM "2" AND "3" TO "4" AND "5". IF BOTH LEADS ARE ENERGIZED, THE HIGHER SPEED SETTING IS USED.
3. FOR 208 VOLT TRANSFORMER OPERATION MOVE PURPLE WIRES FROM TERMINAL 3 TO TERMINAL 2 ON TRANSFORMER.
4. START ASSIST FACTORY EQUIPED WHEN REQUIRED
5. USE COPPER CONDUCTORS ONLY.

++ USE N.E.C. CLASS 2 WIRE

SEE UNIT RATING PLATE FOR TYPE AND SIZE OF OVER CURRENT PROTECTION

208-240/1/60 0140G00871 REV. B

WARNING

High Voltage: Disconnect all power before servicing or installing this unit. Multiple power sources may be present. Failure to do so may cause property damage, personal injury, or death.

Wiring is subject to change. Always refer to the wiring diagram or the unit for the most up-to-date wiring.

WIRING DIAGRAM — GPC1360H41BC

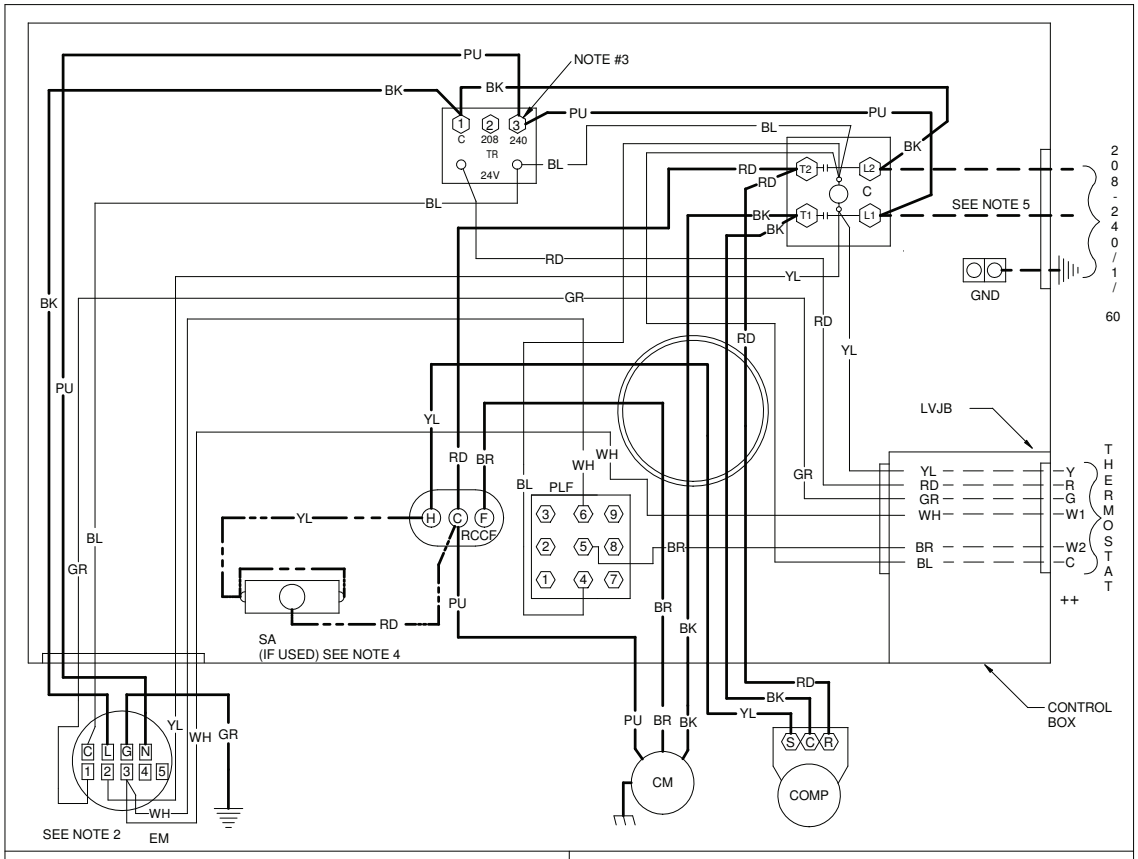

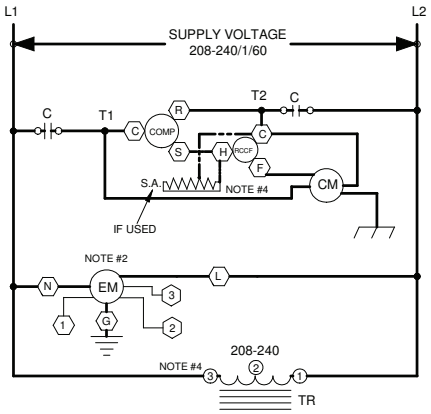

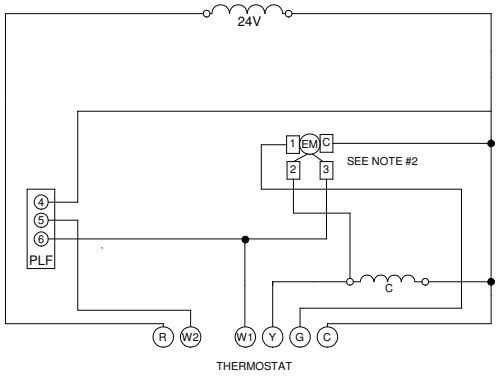

COMPONENT LEGEND

C	CONTACTOR
CM	CONDENSER MOTOR
COMP	COMPRESSOR
EM	EVAPORATOR MOTOR
GND	EQUIPMENT GROUND
LVJB	LOW VOLTAGE JUNCTION BOX
PLF	FEMALE PLUG / CONNECTOR
RCCF	RUN CAPACITOR FOR COMPRESSOR AND FAN
SA	START ASSIST
TR	TRANSFORMER

FACTORY WIRING
- LINE VOLTAGE
- LOW VOLTAGE
- OPTINAL HIGH VOLTAGE

FIELD WIRING
- HIGH VOLTAGE
- LOW VOLTAGE

WIRE CODE

BK	BLACK
BL	BLUE
BR	BROWN
GR	GREEN
OR	ORANGE
PU	PURPLE
RD	RED
WH	WHITE
YL	YELLOW

NOTES:

1. REPLACEMENT WIRE MUST BE SAME SIZE AND TYPE INSULATION AS ORIGINAL (AT LEAST 105°C) USE COPPER CONDUCTOR ONLY.
2. TO CHANGE EVAPORATOR MOTOR SPEED MOVE WHITE AND YELLOW LEADS FROM EM "2" AND "3" TO "4" AND "5". IF BOTH LEADS ARE ENERGIZED, THE HIGHER SPEED SETTING IS USED.
3. FOR 208 VOLT TRANSFORMER OPERATION MOVE PURPLE WIRES FROM TERMINAL 3 TO TERMINAL 2 ON TRANSFORMER.
4. START ASSIST FACTOR EQUIPED WHEN REQUIRED
5. USE COPPER CONDUCTORS ONLY.

++ USE N.E.C. CLASS 2 WIRE

SEE UNIT RATING PLATE FOR TYPE AND SIZE OF OVER CURRENT PROTECTION

208-240/1/60 0140G00407

WARNING **High Voltage:** Disconnect all power before servicing or installing this unit. Multiple power sources may be present. Failure to do so may cause property damage, personal injury, or death.

Wiring is subject to change. Always refer to the wiring diagram or the unit for the most up-to-date wiring.

Accessories

Accessory Description	Item Number	
	Small Chassis	Medium/Large Chassis
Downflow Economizer	PCE101-103	PCE101-103
Downflow Plenum Kit	PCP101-103	PCP101-103
Downflow Plenum Kit (R-8)	PCP101-103 R8	PCP101-103 R8
Elbow Flashing w/ R-8 Liner	PCEF101-103	PCEF101-103
Emergency Heat Relay	OT/EHR18-60	OT/EHR18-60
External Horizontal Filter Rack	GPGHFR101-103	GPGHFR101-103
Horizontal Economizer	PEHH101-103	PEHH101-103
Manual Damper	PCMD101-103	PCMD101-103
Manual Damper- Horizontal Application	PCMDH101-103	PCMDH101-103
Motorized Damper	PCMDM101-103	PCMDM101-103
Outdoor Thermostat w/ Lockout Stat	OT18-60A	OT18-60A
Roof Curb	PCCP101-103	PCCP101-103
Square to Round	SQRPC101	SQRPC102/103
Square to Round for Horizontal Application	SQRPCH101	SQRPCH102/103

Notes

Goodman Manufacturing Company, L.P., reserves the right to discontinue, or change at any time, specifications or designs without notice or without incurring obligations. © 2011 • Goodman Manufacturing Company, L.P. • Houston, Texas • Printed in the USA.