Goodman®

Air Conditioning & Heating

DSXC18

Split System Air Conditioner

Up to 18 SEER

Cooling Capacity:

34,000 - 56,000 BTU/h

Standard Features

- R-410A chlorine-free refrigerant
- Two-Stage Copeland® UltraTech™ scroll compressor
- High-density foam compressor sound blanket
- ComfortNet™ Communications System compatible
- Expanded ComfortAlert™ diagnostics built in
- Set-up capable with 2 low-voltage wires to outdoor unit
- Diagnostic indicator lights and storage of 6 fault codes
- Color-coded terminal strip for non-communicating set-up
- High- and low-pressure switches
- Factory-installed filter drier
- Coil and ambient temperature sensors
- Two-speed, super-quiet condenser fan motor
- Sweat connection service valves with easy access to gauge ports
- AHRI Certified; ETL Listed

Cabinet Features

- Goodman® brand sound control top design
- Wire fan discharge grille
- Steel louver coil guard
- Baked-on powder-paint finish with 500-hour salt-spray approval
- Top and side maintenance access
- Single-panel access to controls with space provided for field-installed accessories
- When properly anchored, meets the 2001 Florida Building Code unit integrity requirements for hurricane-type winds (Anchor bracket kits available.)

Contents

Nomenclature 2
Product Specifications 3
Expanded Cooling Data 4
AHRI Ratings..... 16
Dimensions 20
Wiring Diagram..... 21
Accessories 22

LIFETIME COMPRESSOR LIMITED WARRANTY* | 10 YEAR UNIT REPLACEMENT LIMITED WARRANTY* | 10 YEAR PARTS LIMITED WARRANTY* | R-410A REFRIGERANT | ComfortNet CONTROL SYSTEM | ETL | AHRI CERTIFIED | BBB ACCREDITED BUSINESS | BETTER VALUE

* Complete warranty details available from your local dealer or at www.goodmanmfg.com. To receive the Lifetime Compressor Limited Warranty (good for as long as you own your home), 10-Year Unit Replacement Limited Warranty and 10-Year Parts Limited Warranty, online registration must be completed within 60 days of installation. Online registration is not required in California or Québec.

NOMENCLATURE

D	S	X	C	18	036	1	A	A
1	2	3	4	5,6	7,8,9	10	11	12

Brand
D Goodman® Brand

Product Category
S Split System

Unit Type
X Condenser R-410A
Z Heat Pump R-410A

Communication Feature
C ComfortNet 4-wire communications ready

Efficiency
16 16 SEER
18 18 SEER

Nominal Capacity
036 3 Tons
048 4 Tons
060 5 Tons

Electrical
1 208/230 V, 1 Phase, 60 Hz
2 220/240 V, 1 Phase, 50 Hz
3 208/230 V, 3 Phase, 60 Hz
4 460 V, 3 Phase, 60 Hz
5 380/415 V, 3 Phase, 50 Hz

Engineering *
Major Revision

Engineering *
Minor Revision

* Neither used for order entry or inventory management.

Specifications

	DSXC18 0361A	DSXC18 0481A	DSXC18 0601A
Cooling Capacity			
Nominal Cooling (BTU/h)	35,000	47,000	57,000
Decibels	71	72	74
Compressor			
RLA	15.3	21.2	27.1
LRA	83	104	152.9
Condenser Fan Motor			
Horsepower (RPM)	⅕	⅕	⅕
FLA	2.80	2.80	2.80
Refrigeration System			
Refrigerant Line Size[1]			
Liquid Line Size (“O.D.)	⅜"	⅜"	⅜"
Suction Line Size (“O.D.)	⅞"	1⅛"	1⅛"
Refrigerant Connection Size			
Liquid Valve Size (“O.D.)	⅜"	⅜"	⅜"
Suction Valve Size (“O.D.)	⅞"	⅞"	⅞"
Valve Connection Type	Sweat	Sweat	Sweat
Refrigerant Charge	184	259	259
Expansion Device	TXV	TXV	TXV
Superheat at Service Valve	7-9°F	7-9°F	7-9°F
Subcooling at Service Valve	5-7°F	5-7°F	5-7°F
Electrical Data			
Voltage-Phase-Hz	208/230-1-60	208/230-1-60	208/230-1-60
Minimum Circuit Ampacity [1]	21.9	29.3	36.7
Max. Overcurrent Protection [2]	35	50	60
Min / Max Volts	197 / 253	197 / 253	197 / 253
Electrical Conduit Size	½" or ¾"	½" or ¾"	½" or ¾"
Equipment Weight (lbs)	250	305	316
Ship Weight (lbs)	272	327	338

[1] Wire size should be determined in accordance with National Electrical Codes; extensive wire runs will require larger wire sizes

[2] Must use time-delay fuses or HACR-type circuit breakers of the same size as noted.

Notes

- Always check the S&R plate for electrical data on the unit being installed.
- Installer will need to supply ⅞” to 1⅛” adapters for suction line connections.
- Unit is charged with refrigerant for 15’ of ⅜” liquid line. System charge must be adjusted per Installation Instructions Final Charge Procedure.
- Installation of these units that require a TXV Kit to be installed on the indoor coil.
- PLEASE NOTE: the specified TXV is determined by the outdoor unit, not the indoor coil.

Expanded Cooling Data — DSXC180361A* / CA*F4961*6**+TXV / MBVC2000**-1 Low Stage

			Outdoor Ambient Temperature																							
			65ºF				75ºF				85ºF				95ºF				105ºF				115ºF			
			Entering Indoor Wet Bulb Temperature																							
IDB	Airflow		59	63	67	71	59	63	67	71	59	63	67	71	59	63	67	71	59	63	67	71	59	63	67	71
70	930	MBh	25.3	26.2	28.8	-	24.7	25.6	28.1	-	24.1	25.0	27.4	-	23.6	24.4	26.8	-	22.4	23.2	25.4	-	20.7	21.5	23.5	-
		S/T	0.76	0.63	0.44	-	0.79	0.66	0.45	-	0.81	0.67	0.47	-	0.83	0.70	0.48	-	0.86	0.72	0.50	-	0.87	0.73	0.50	-
		ΔT	19	16	12	-	19	17	13	-	19	17	13	-	19	17	13	-	19	17	13	-	18	15	12	-
		kW	1.30	1.33	1.38	-	1.41	1.45	1.50	-	1.51	1.55	1.60	-	1.60	1.63	1.69	-	1.67	1.71	1.77	-	1.73	1.77	1.84	-
		Amps	5.3	5.5	5.7	-	5.8	5.9	6.1	-	6.3	6.5	6.7	-	6.7	6.9	7.1	-	7.2	7.4	7.6	-	7.6	7.8	8.1	-
		HI PR	210	226	229	-	237	255	259	-	270	290	295	-	308	331	335	-	332	357	362	-	394	423	429	-
		Lo PR	124	128	140	-	128	132	144	-	132	136	149	-	135	140	153	-	138	143	156	-	142	146	159	-
	825	MBh	24.6	25.5	27.9	-	24.0	24.9	27.3	-	23.4	24.3	26.6	-	22.9	23.7	26.0	-	21.7	22.5	24.7	-	20.1	20.9	22.9	-
		S/T	0.72	0.60	0.42	-	0.75	0.63	0.43	-	0.77	0.64	0.44	-	0.79	0.66	0.46	-	0.82	0.69	0.48	-	0.83	0.69	0.48	-
		ΔT	20	17	13	-	20	17	13	-	20	17	13	-	20	18	13	-	20	17	13	-	19	16	12	-
		kW	1.29	1.32	1.37	-	1.40	1.43	1.48	-	1.50	1.53	1.59	-	1.58	1.62	1.68	-	1.65	1.69	1.75	-	1.72	1.76	1.82	-
		Amps	5.3	5.4	5.6	-	5.7	5.9	6.1	-	6.2	6.4	6.6	-	6.7	6.8	7.1	-	7.1	7.3	7.5	-	7.6	7.7	8.0	-
		HI PR	208	224	227	-	235	253	256	-	267	288	292	-	305	327	332	-	329	354	359	-	390	419	425	-
		Lo PR	123	127	138	-	126	130	142	-	131	135	147	-	134	138	151	-	137	141	154	-	140	145	158	-
	720	MBh	22.7	23.5	25.8	-	22.2	23.0	25.2	-	21.6	22.4	24.6	-	21.1	21.9	24.0	-	20.1	20.8	22.8	-	18.6	19.3	21.1	-
		S/T	0.70	0.58	0.40	-	0.72	0.60	0.42	-	0.74	0.62	0.43	-	0.77	0.64	0.44	-	0.79	0.66	0.46	-	0.80	0.67	0.46	-
		ΔT	20	18	13	-	20	18	13	-	20	18	13	-	21	18	14	-	20	18	13	-	19	16	12	-
		kW	1.28	1.31	1.36	-	1.39	1.42	1.47	-	1.48	1.52	1.57	-	1.57	1.60	1.66	-	1.64	1.68	1.74	-	1.70	1.74	1.80	-
		Amps	5.2	5.4	5.5	-	5.7	5.8	6.0	-	6.2	6.3	6.5	-	6.6	6.8	7.0	-	7.1	7.2	7.5	-	7.5	7.7	7.9	-
		HI PR	206	221	225	-	233	250	254	-	265	285	289	-	302	324	329	-	326	350	355	-	386	415	421	-
		Lo PR	122	125	137	-	125	129	141	-	129	133	146	-	133	137	150	-	135	140	153	-	139	143	156	-
75	930	MBh	25.8	26.5	28.7	30.8	25.2	25.9	28.0	30.1	24.6	25.3	27.4	29.4	24.0	**24.7**	26.7	28.7	22.8	23.4	25.4	27.2	21.1	21.7	23.5	25.2
		S/T	0.86	0.77	0.58	0.38	0.89	0.80	0.60	0.39	0.92	0.82	0.62	0.40	0.95	**0.85**	0.64	0.41	0.98	0.88	0.66	0.43	0.99	0.89	0.67	0.43
		ΔT	22	20	17	11	22	20	17	12	22	20	17	12	22	**21**	17	12	22	20	17	12	21	19	16	11
		kW	1.30	1.33	1.38	1.43	1.41	1.45	1.50	1.55	1.51	1.55	1.60	1.66	1.60	**1.63**	1.69	1.75	1.67	1.71	1.77	1.83	1.73	1.77	1.84	1.90
		Amps	5.3	5.5	5.7	5.9	5.8	5.9	6.1	6.4	6.3	6.5	6.7	6.9	6.7	**6.9**	7.1	7.4	7.2	7.4	7.6	7.9	7.6	7.8	8.1	8.4
		HI PR	210	226	229	234	237	255	259	265	270	290	295	301	308	**331**	335	343	332	357	362	370	394	423	429	439
		Lo PR	124	128	140	149	128	132	144	153	132	136	149	158	135	**140**	153	162	138	143	156	166	142	146	159	170
	825	MBh	25.0	25.7	27.9	29.9	24.4	25.1	27.2	29.2	23.8	24.5	26.6	28.5	23.3	**23.9**	25.9	27.8	22.1	22.8	24.6	26.4	20.5	21.1	22.8	24.5
		S/T	0.82	0.74	0.56	0.36	0.85	0.76	0.58	0.37	0.87	0.78	0.59	0.38	0.90	**0.81**	0.61	0.39	0.94	0.84	0.63	0.41	0.94	0.84	0.64	0.41
		ΔT	23	21	17	12	23	21	17	12	23	21	18	12	23	**22**	18	12	23	21	17	12	22	20	16	11
		kW	1.29	1.32	1.37	1.42	1.40	1.43	1.48	1.54	1.50	1.53	1.59	1.64	1.58	**1.62**	1.68	1.74	1.65	1.69	1.75	1.82	1.72	1.76	1.82	1.88
		Amps	5.3	5.4	5.6	5.8	5.7	5.9	6.1	6.3	6.2	6.4	6.6	6.9	6.7	**6.8**	7.1	7.4	7.1	7.3	7.5	7.8	7.6	7.7	8.0	8.3
		HI PR	208	224	227	232	235	253	256	262	267	288	292	298	305	**327**	332	339	329	354	359	367	390	419	425	435
		Lo PR	123	127	138	147	126	130	142	152	131	135	147	157	134	**138**	151	161	137	141	154	164	140	145	158	168
	720	MBh	23.1	23.8	25.7	27.6	22.5	23.2	25.1	27.0	22.0	22.7	24.5	26.3	21.5	**22.1**	23.9	25.7	20.4	21.0	22.7	24.4	18.9	19.5	21.1	22.6
		S/T	0.79	0.71	0.54	0.35	0.82	0.74	0.56	0.36	0.84	0.75	0.57	0.37	0.87	**0.78**	0.59	0.38	0.90	0.81	0.61	0.39	0.91	0.81	0.62	0.40
		ΔT	23	22	18	12	24	22	18	12	24	22	18	12	24	**22**	18	12	24	22	18	12	22	20	17	11
		kW	1.28	1.31	1.36	1.40	1.39	1.42	1.47	1.52	1.48	1.52	1.57	1.63	1.57	**1.60**	1.66	1.72	1.64	1.68	1.74	1.80	1.70	1.74	1.80	1.87
		Amps	5.2	5.4	5.5	5.8	5.7	5.8	6.0	6.2	6.2	6.3	6.5	6.8	6.6	**6.8**	7.0	7.3	7.1	7.2	7.5	7.8	7.5	7.7	7.9	8.2
		HI PR	206	221	225	230	233	250	254	259	265	285	289	295	302	**324**	329	336	326	350	355	363	386	415	421	430
		Lo PR	122	125	137	146	125	129	141	150	129	133	146	155	133	**137**	150	159	135	140	153	162	139	143	156	166

IDB = Entering Indoor Dry Bulb Temperature

High and low pressures are measured at the liquid and suction service valves.

Shaded area reflects ACCA (TVA) conditions

kW = Total system power

Amps = outdoor unit amps (comp.+fan)

Expanded Cooling Data — DSXC180361A* / CA*F4961*6**+TXV / MBVC2000**-1 Low Stage (cont.)

			Outdoor Ambient Temperature																							
			65ºF				75ºF				85ºF				95ºF				105ºF				115ºF			
			Entering Indoor Wet Bulb Temperature																							
IDB	Airflow		59	63	67	71	59	63	67	71	59	63	67	71	59	63	67	71	59	63	67	71	59	63	67	71
80	930	MBh	26.2	26.8	28.6	30.6	25.6	26.2	28.0	29.9	25.0	25.5	27.3	29.2	24.4	24.9	26.6	28.5	23.2	23.7	25.3	27.0	21.5	21.9	23.4	25.0
		S/T	0.95	0.89	0.72	0.54	1.00	0.92	0.75	0.56	1.00	0.94	0.77	0.57	1.00	1.00	0.79	0.59	1.00	1.00	0.82	0.61	1.00	1.00	0.83	0.62
		ΔT	25	23	20	16	25	24	21	17	25	24	21	17	24	25	21	17	23	23	21	16	21	22	19	15
		kW	1.30	1.33	1.38	1.43	1.41	1.45	1.50	1.55	1.51	1.55	1.60	1.66	1.60	1.63	1.69	1.75	1.67	1.71	1.77	1.83	1.73	1.77	1.84	1.90
		Amps	5.3	5.5	5.7	5.9	5.8	5.9	6.1	6.4	6.3	6.5	6.7	6.9	6.7	6.9	7.1	7.4	7.2	7.4	7.6	7.9	7.6	7.8	8.1	8.4
		HI PR	210	226	229	234	237	255	259	265	270	290	295	301	308	331	335	343	332	357	362	370	394	423	429	439
		Lo PR	124	128	140	149	128	132	144	153	132	136	149	158	135	140	153	162	138	143	156	166	142	146	159	170
	825	MBh	25.4	26.0	27.8	29.7	24.9	25.4	27.1	29.0	24.3	24.8	26.5	28.3	23.7	24.2	**25.8**	27.6	22.5	23.0	24.6	26.2	20.8	21.3	22.7	24.3
		S/T	0.90	0.85	0.69	0.51	0.93	0.88	0.71	0.53	0.96	0.90	0.73	0.55	0.99	0.93	**0.76**	0.56	1.00	0.96	0.78	0.59	1.00	0.97	0.79	0.59
		ΔT	26	25	21	17	26	25	22	17	26	25	22	17	26	25	**22**	17	25	25	21	17	23	23	20	16
		kW	1.29	1.32	1.37	1.42	1.40	1.43	1.48	1.54	1.50	1.53	1.59	1.64	1.58	1.62	**1.68**	1.74	1.65	1.69	1.75	1.82	1.72	1.76	1.82	1.88
		Amps	5.3	5.4	5.6	5.8	5.7	5.9	6.1	6.3	6.2	6.4	6.6	6.9	6.7	6.8	**7.1**	7.4	7.1	7.3	7.5	7.8	7.6	7.7	8.0	8.3
		HI PR	208	224	227	232	235	253	256	262	267	288	292	298	305	327	**332**	339	329	354	359	367	390	419	425	435
		Lo PR	123	127	138	147	126	130	142	152	131	135	147	157	134	138	**151**	161	137	141	154	164	140	145	158	168
	720	MBh	23.5	24.0	25.6	27.4	22.9	23.4	25.0	26.8	22.4	22.9	24.5	26.1	21.9	22.3	23.9	25.5	20.8	21.2	22.7	24.2	19.2	19.6	21.0	22.4
		S/T	0.87	0.82	0.66	0.50	0.90	0.85	0.69	0.51	0.92	0.87	0.71	0.53	0.95	0.89	0.73	0.54	0.99	0.93	0.76	0.56	1.00	0.94	0.76	0.57
		ΔT	26	25	22	17	26	25	22	18	26	25	22	18	27	26	22	18	26	25	22	17	25	24	20	16
		kW	1.28	1.31	1.36	1.40	1.39	1.42	1.47	1.52	1.48	1.52	1.57	1.63	1.57	1.60	1.66	1.72	1.64	1.68	1.74	1.80	1.70	1.74	1.80	1.87
		Amps	5.2	5.4	5.5	5.8	5.7	5.8	6.0	6.2	6.2	6.3	6.5	6.8	6.6	6.8	7.0	7.3	7.1	7.2	7.5	7.8	7.5	7.7	7.9	8.2
		HI PR	206	221	225	230	233	250	254	259	265	285	289	295	302	324	329	336	326	350	355	363	386	415	421	430
		Lo PR	122	125	137	146	125	129	141	150	129	133	146	155	133	137	150	159	135	140	153	162	139	143	156	166
85	930	MBh	26.7	27.2	28.5	30.4	26.0	26.6	27.8	29.7	25.4	25.9	27.1	29.0	24.8	25.3	26.5	28.3	23.6	24.0	25.2	26.8	21.8	22.3	23.3	24.9
		S/T	0.99	0.96	0.86	0.70	1.00	0.99	0.89	0.73	1.00	1.00	0.92	0.74	1.00	1.00	0.95	0.77	1.00	1.00	0.98	0.80	1.00	1.00	0.99	0.80
		ΔT	26	26	24	21	26	26	25	21	25	26	25	21	25	25	25	21	23	24	24	21	22	22	23	20
		kW	1.30	1.33	1.38	1.43	1.41	1.45	1.50	1.55	1.51	1.55	1.60	1.66	1.60	1.63	1.69	1.75	1.67	1.71	1.77	1.83	1.73	1.77	1.84	1.90
		Amps	5.3	5.5	5.7	5.9	5.8	5.9	6.1	6.4	6.3	6.5	6.7	6.9	6.7	6.9	7.1	7.4	7.2	7.4	7.6	7.9	7.6	7.8	8.1	8.4
		HI PR	210	226	229	234	237	255	259	265	270	290	295	301	308	331	335	343	332	357	362	370	394	423	429	439
		Lo PR	124	128	140	149	128	132	144	153	132	136	149	158	135	140	153	162	138	143	156	166	142	146	159	170
	825	MBh	25.9	26.4	27.6	29.5	25.3	25.8	27.0	28.8	24.7	25.2	26.4	28.1	24.1	24.6	25.7	27.4	22.9	23.3	24.4	26.1	21.2	21.6	22.6	24.1
		S/T	0.95	0.91	0.82	0.67	0.98	0.95	0.85	0.69	1.00	0.97	0.88	0.71	1.00	1.00	0.90	0.73	1.00	1.00	0.94	0.76	1.00	1.00	0.95	0.77
		ΔT	27	27	25	22	28	27	26	22	28	27	26	22	27	27	26	22	25	26	26	22	24	24	24	21
		kW	1.29	1.32	1.37	1.42	1.40	1.43	1.48	1.54	1.50	1.53	1.59	1.64	1.58	1.62	1.68	1.74	1.65	1.69	1.75	1.82	1.72	1.76	1.82	1.88
		Amps	5.3	5.4	5.6	5.8	5.7	5.9	6.1	6.3	6.2	6.4	6.6	6.9	6.7	6.8	7.1	7.4	7.1	7.3	7.5	7.8	7.6	7.7	8.0	8.3
		HI PR	208	224	227	232	235	253	256	262	267	288	292	298	305	327	332	339	329	354	359	367	390	419	425	435
		Lo PR	123	127	138	147	126	130	142	152	131	135	147	157	134	138	151	161	137	141	154	164	140	145	158	168
	720	MBh	23.9	24.4	25.5	27.2	23.3	23.8	24.9	26.6	22.8	23.2	24.3	26.0	22.2	22.7	23.7	25.3	21.1	21.5	22.5	24.1	19.6	19.9	20.9	22.3
		S/T	0.91	0.88	0.79	0.64	0.94	0.91	0.82	0.67	0.97	0.93	0.84	0.68	1.00	0.97	0.87	0.71	1.00	1.00	0.90	0.73	1.00	1.00	0.91	0.74
		ΔT	27.8	27	26	22	28	28	26	23	28	28	26	23	28	28	26	23	27	27	26	23	25	25	24	21
		kW	1.28	1.31	1.36	1.40	1.39	1.42	1.47	1.52	1.48	1.52	1.57	1.63	1.57	1.60	1.66	1.72	1.64	1.68	1.74	1.80	1.70	1.74	1.80	1.87
		Amps	5.2	5.4	5.5	5.8	5.7	5.8	6.0	6.2	6.2	6.3	6.5	6.8	6.6	6.8	7.0	7.3	7.1	7.2	7.5	7.8	7.5	7.7	7.9	8.2
		HI PR	206	221	225	230	233	250	254	259	265	285	289	295	302	324	329	336	326	350	355	363	386	415	421	430
		Lo PR	122	125	137	146	125	129	141	150	129	133	146	155	133	137	150	159	135	140	153	162	139	143	156	166

IDB = Entering Indoor Dry Bulb Temperature

High and low pressures are measured at the liquid and suction service valves.

Shaded area reflects AHRI (TVA) conditions

kW = Total system power

Amps = outdoor unit amps (comp.+fan)

Expanded Cooling Data — DSXC180361A* / CA*F4961*6**+TXV / MBVC2000**-1 High Stage

			Outdoor Ambient Temperature																							
			65ºF				75ºF				85ºF				95ºF				105ºF				115ºF			
			Entering Indoor Wet Bulb Temperature																							
IDB	Airflow		59	63	67	71	59	63	67	71	59	63	67	71	59	63	67	71	59	63	67	71	59	63	67	71
70	1330	MBh	36.7	38.1	41.7	-	35.9	37.2	40.7	-	35.0	36.3	39.8	-	34.2	35.4	38.8	-	32.4	33.6	36.8	-	30.1	31.2	34.1	-
		S/T	0.74	0.62	0.43	-	0.76	0.64	0.44	-	0.78	0.65	0.45	-	0.81	0.68	0.47	-	0.84	0.70	0.49	-	0.85	0.71	0.49	-
		ΔT	19	16	12	-	19	16	12	-	19	16	12	-	19	17	13	-	19	16	12	-	18	15	12	-
		kW	2.09	2.14	2.21	-	2.26	2.31	2.39	-	2.41	2.47	2.56	-	2.55	2.61	2.70	-	2.66	2.73	2.82	-	2.76	2.83	2.93	-
		Amps	8.2	8.4	8.7	-	8.9	9.1	9.4	-	9.7	9.9	10.3	-	10.4	10.7	11.0	-	11.1	11.4	11.8	-	11.8	12.1	12.5	-
		HI PR	220	237	240	-	249	268	271	-	283	304	309	-	322	347	352	-	348	374	380	-	413	444	450	-
		Lo PR	118	122	133	-	122	126	137	-	126	130	142	-	129	134	146	-	132	136	149	-	135	140	152	-
	1175	MBh	35.6	36.9	40.5	-	34.8	36.1	39.5	-	34.0	35.2	38.6	-	33.2	34.4	37.7	-	31.5	32.7	35.8	-	29.2	30.2	33.1	-
		S/T	0.70	0.59	0.41	-	0.73	0.61	0.42	-	0.75	0.62	0.43	-	0.77	0.64	0.45	-	0.80	0.67	0.46	-	0.81	0.67	0.47	-
		ΔT	20	17	13	-	20	17	13	-	20	17	13	-	20	17	13	-	20	17	13	-	18	16	12	-
		kW	2.07	2.12	2.19	-	2.24	2.29	2.37	-	2.39	2.45	2.53	-	2.53	2.59	2.68	-	2.64	2.70	2.80	-	2.74	2.80	2.90	-
		Amps	8.1	8.3	8.6	-	8.8	9.0	9.3	-	9.6	9.9	10.2	-	10.3	10.6	10.9	-	11.0	11.3	11.7	-	11.7	12.0	12.4	-
		HI PR	218	234	238	-	246	265	269	-	280	301	306	-	319	343	348	-	345	371	376	-	409	439	446	-
		Lo PR	117	121	132	-	121	125	136	-	125	129	141	-	128	132	144	-	131	135	147	-	134	138	151	-
	1025	MBh	32.9	34.1	37.4	-	32.1	33.3	36.5	-	31.4	32.5	35.6	-	30.6	31.7	34.8	-	29.1	30.1	33.0	-	26.9	27.9	30.6	-
		S/T	0.68	0.57	0.39	-	0.70	0.59	0.41	-	0.72	0.60	0.42	-	0.74	0.62	0.43	-	0.77	0.65	0.45	-	0.78	0.65	0.45	-
		ΔT	20	17	13	-	20	18	13	-	20	18	13	-	20	18	13	-	20	17	13	-	19	16	12	-
		kW	2.05	2.10	2.17	-	2.22	2.27	2.35	-	2.37	2.43	2.51	-	2.50	2.56	2.65	-	2.62	2.68	2.77	-	2.71	2.78	2.88	-
		Amps	8.1	8.3	8.5	-	8.7	9.0	9.3	-	9.5	9.8	10.1	-	10.2	10.5	10.8	-	10.9	11.2	11.5	-	11.6	11.8	12.3	-
		HI PR	216	232	235	-	244	262	266	-	278	298	303	-	316	340	345	-	341	367	372	-	405	435	441	-
		Lo PR	116	120	131	-	120	123	135	-	124	127	139	-	127	131	143	-	129	134	146	-	133	137	149	-
75	1330	MBh	37.3	38.4	41.6	44.7	36.5	37.5	40.6	43.6	35.6	36.7	39.7	42.6	34.7	**35.8**	38.7	41.5	33.0	34.0	36.8	39.5	30.6	31.5	34.1	36.6
		S/T	0.84	0.75	0.57	0.37	0.87	0.78	0.59	0.38	0.89	0.80	0.60	0.39	0.92	**0.82**	0.62	0.40	0.95	0.85	0.65	0.42	0.96	0.86	0.65	0.42
		ΔT	22	20	16	11	22	20	17	11	22	20	17	11	22	**20**	17	12	22	20	16	11	20	19	15	11
		kW	2.09	2.14	2.21	2.28	2.26	2.31	2.39	2.48	2.41	2.47	2.56	2.65	2.55	**2.61**	2.70	2.80	2.66	2.73	2.82	2.92	2.76	2.83	2.93	3.03
		Amps	8.2	8.4	8.7	9.0	8.9	9.1	9.4	9.8	9.7	9.9	10.3	10.7	10.4	**10.7**	11.0	11.5	11.1	11.4	11.8	12.2	11.8	12.1	12.5	13.0
		HI PR	220	237	240	245	249	268	271	277	283	304	309	316	322	**347**	352	359	348	374	380	388	413	444	450	460
		Lo PR	118	122	133	142	122	126	137	146	126	130	142	151	129	**134**	146	155	132	136	149	158	135	140	152	162
	1175	MBh	36.3	37.3	40.4	43.4	35.4	36.5	39.5	42.4	34.6	35.6	38.5	41.3	33.7	**34.7**	37.6	40.3	32.0	33.0	35.7	38.3	29.7	30.6	33.1	35.5
		S/T	0.80	0.72	0.54	0.35	0.83	0.74	0.56	0.36	0.85	0.76	0.58	0.37	0.88	**0.78**	0.59	0.38	0.91	0.81	0.62	0.40	0.92	0.82	0.62	0.40
		ΔT	23	21	17	12	23	21	17	12	23	21	17	12	23	**21**	17	12	23	21	17	12	21	20	16	11
		kW	2.07	2.12	2.19	2.26	2.24	2.29	2.37	2.45	2.39	2.45	2.53	2.62	2.53	**2.59**	2.68	2.77	2.64	2.70	2.80	2.90	2.74	2.80	2.90	3.01
		Amps	8.1	8.3	8.6	9.0	8.8	9.0	9.3	9.7	9.6	9.9	10.2	10.6	10.3	**10.6**	10.9	11.4	11.0	11.3	11.7	12.1	11.7	12.0	12.4	12.9
		HI PR	218	234	238	243	246	265	269	275	280	301	306	312	319	**343**	348	356	345	371	376	384	409	439	446	455
		Lo PR	117	121	132	141	121	125	136	145	125	129	141	150	128	**132**	144	154	131	135	147	157	134	138	151	161
	1025	MBh	33.5	34.5	37.3	40.0	32.7	33.6	36.4	39.1	31.9	32.8	35.6	38.2	31.1	**32.0**	34.7	37.2	29.6	30.4	33.0	35.4	27.4	28.2	30.5	32.8
		S/T	0.77	0.69	0.52	0.34	0.80	0.71	0.54	0.35	0.82	0.73	0.55	0.36	0.85	**0.76**	0.57	0.37	0.88	0.79	0.59	0.38	0.89	0.79	0.60	0.39
		ΔT	23	21	17	12	23	22	18	12	23	22	18	12	24	**22**	18	12	23	21	18	12	22	20	16	11
		kW	2.05	2.10	2.17	2.24	2.22	2.27	2.35	2.43	2.37	2.43	2.51	2.60	2.50	**2.56**	2.65	2.75	2.62	2.68	2.77	2.87	2.71	2.78	2.88	2.98
		Amps	8.1	8.3	8.5	8.9	8.7	9.0	9.3	9.6	9.5	9.8	10.1	10.5	10.2	**10.5**	10.8	11.2	10.9	11.2	11.5	12.0	11.6	11.8	12.3	12.7
		HI PR	216	232	235	241	244	262	266	272	278	298	303	309	316	**340**	345	352	341	367	372	380	405	435	441	451
		Lo PR	116	120	131	139	120	123	135	143	124	127	139	148	127	**131**	143	152	129	134	146	155	133	137	149	159

IDB = Entering Indoor Dry Bulb Temperature

High and low pressures are measured at the liquid and suction service valves.

Shaded area reflects ACCA (TVA) conditions

kW = Total system power

Amps = outdoor unit amps (comp.+fan)

Expanded Cooling Data — DSXC180361A* / CA*F4961*6**+TXV / MBVC2000**-1 High Stage (cont.)

			Outdoor Ambient Temperature																							
			65ºF				75ºF				85ºF				95ºF				105ºF				115ºF			
			Entering Indoor Wet Bulb Temperature																							
IDB	Airflow		59	63	67	71	59	63	67	71	59	63	67	71	59	63	67	71	59	63	67	71	59	63	67	71
80	1330	MBh	38.0	38.8	41.5	44.4	37.1	37.9	40.5	43.3	36.2	37.0	39.6	42.3	35.4	36.1	38.6	41.3	33.6	34.3	36.7	39.2	31.1	31.8	34.0	36.3
		S/T	0.92	0.86	0.70	0.52	0.95	0.89	0.73	0.54	1.00	0.92	0.75	0.56	1.00	0.95	0.77	0.58	1.00	1.00	0.80	0.60	1.00	1.00	0.81	0.60
		ΔT	24	23	20	16	24	23	20	16	25	23	20	16	24	24	21	16	23	24	20	16	22	22	19	15
		kW	2.09	2.14	2.21	2.28	2.26	2.31	2.39	2.48	2.41	2.47	2.56	2.65	2.55	2.61	2.70	2.80	2.66	2.73	2.82	2.92	2.76	2.83	2.93	3.03
		Amps	8.2	8.4	8.7	9.0	8.9	9.1	9.4	9.8	9.7	9.9	10.3	10.7	10.4	10.7	11.0	11.5	11.1	11.4	11.8	12.2	11.8	12.1	12.5	13.0
		HI PR	220	237	240	245	249	268	271	277	283	304	309	316	322	347	352	359	348	374	380	388	413	444	450	460
		Lo PR	118	122	133	142	122	126	137	146	126	130	142	151	129	134	146	155	132	136	149	158	135	140	152	162
	1175	MBh	36.9	37.7	40.3	43.1	36.0	36.8	39.3	42.1	35.2	35.9	38.4	41.1	34.3	35.1	**37.5**	40.1	32.6	33.3	35.6	38.1	30.2	30.9	33.0	35.2
		S/T	0.88	0.82	0.67	0.50	0.91	0.85	0.69	0.52	0.93	0.87	0.71	0.53	0.96	0.90	**0.73**	0.55	1.00	0.94	0.76	0.57	1.00	0.94	0.77	0.57
		ΔT	25	24	21	17	26	25	21	17	26	25	21	17	26	25	**22**	17	25	24	21	17	24	23	20	16
		kW	2.07	2.12	2.19	2.26	2.24	2.29	2.37	2.45	2.39	2.45	2.53	2.62	2.53	2.59	**2.68**	2.77	2.64	2.70	2.80	2.90	2.74	2.80	2.90	3.01
		Amps	8.1	8.3	8.6	9.0	8.8	9.0	9.3	9.7	9.6	9.9	10.2	10.6	10.3	10.6	**10.9**	11.4	11.0	11.3	11.7	12.1	11.7	12.0	12.4	12.9
		HI PR	218	234	238	243	246	265	269	275	280	301	306	312	319	343	**348**	356	345	371	376	384	409	439	446	455
		Lo PR	117	121	132	141	121	125	136	145	125	129	141	150	128	132	**144**	154	131	135	147	157	134	138	151	161
	1025	MBh	34.1	34.8	37.2	39.7	33.3	34.0	36.3	38.8	32.5	33.2	35.4	37.9	31.7	32.4	34.6	37.0	30.1	30.8	32.9	35.1	27.9	28.5	30.4	32.5
		S/T	0.85	0.79	0.65	0.48	0.88	0.82	0.67	0.50	0.90	0.84	0.69	0.51	0.93	0.87	0.71	0.53	0.96	0.90	0.74	0.55	0.97	0.91	0.74	0.55
		ΔT	26	25	22	17	26	25	22	17	26	25	22	17	26	25	22	18	26	25	22	17	24	23	20	16
		kW	2.05	2.10	2.17	2.24	2.22	2.27	2.35	2.43	2.37	2.43	2.51	2.60	2.50	2.56	2.65	2.75	2.62	2.68	2.77	2.87	2.71	2.78	2.88	2.98
		Amps	8.1	8.3	8.5	8.9	8.7	9.0	9.3	9.6	9.5	9.8	10.1	10.5	10.2	10.5	10.8	11.2	10.9	11.2	11.5	12.0	11.6	11.8	12.3	12.7
		HI PR	216	232	235	241	244	262	266	272	278	298	303	309	316	340	345	352	341	367	372	380	405	435	441	451
		Lo PR	116	120	131	139	120	123	135	143	124	127	139	148	127	131	143	152	129	134	146	155	133	137	149	159
85	1330	MBh	38.7	39.4	41.3	44.0	37.8	38.5	40.3	43.0	36.9	37.6	39.4	42.0	36.0	36.7	38.4	41.0	34.2	34.8	36.5	38.9	31.7	32.3	33.8	36.1
		S/T	0.96	0.93	0.84	0.68	1.00	0.96	0.87	0.71	1.00	0.99	0.89	0.72	1.00	1.00	0.92	0.75	1.00	1.00	0.96	0.78	1.00	1.00	0.96	0.78
		ΔT	26	25	24	21	26	26	24	21	25	26	24	21	25	25	24	21	24	24	24	21	22	22	23	19
		kW	2.09	2.14	2.21	2.28	2.26	2.31	2.39	2.48	2.41	2.47	2.56	2.65	2.55	2.61	2.70	2.80	2.66	2.73	2.82	2.92	2.76	2.83	2.93	3.03
		Amps	8.2	8.4	8.7	9.0	8.9	9.1	9.4	9.8	9.7	9.9	10.3	10.7	10.4	10.7	11.0	11.5	11.1	11.4	11.8	12.2	11.8	12.1	12.5	13.0
		HI PR	220	237	240	245	249	268	271	277	283	304	309	316	322	347	352	359	348	374	380	388	413	444	450	460
		Lo PR	118	122	133	142	122	126	137	146	126	130	142	151	129	134	146	155	132	136	149	158	135	140	152	162
	1175	MBh	37.5	38.3	40.1	42.8	36.7	37.4	39.1	41.8	35.8	36.5	38.2	40.8	34.9	35.6	37.3	39.8	33.2	33.8	35.4	37.8	30.7	31.3	32.8	35.0
		S/T	0.92	0.89	0.80	0.65	0.95	0.92	0.83	0.67	0.98	0.94	0.85	0.69	1.00	0.97	0.88	0.71	1.00	1.00	0.91	0.74	1.00	1.00	0.92	0.75
		ΔT	27	27	25	22	27	27	25	22	27	27	25	22	27	27	26	22	26	26	25	22	24	25	24	20
		kW	2.07	2.12	2.19	2.26	2.24	2.29	2.37	2.45	2.39	2.45	2.53	2.62	2.53	2.59	2.68	2.77	2.64	2.70	2.80	2.90	2.74	2.80	2.90	3.01
		Amps	8.1	8.3	8.6	9.0	8.8	9.0	9.3	9.7	9.6	9.9	10.2	10.6	10.3	10.6	10.9	11.4	11.0	11.3	11.7	12.1	11.7	12.0	12.4	12.9
		HI PR	218	234	238	243	246	265	269	275	280	301	306	312	319	343	348	356	345	371	376	384	409	439	446	455
		Lo PR	117	121	132	141	121	125	136	145	125	129	141	150	128	132	144	154	131	135	147	157	134	138	151	161
	1025	MBh	34.6	35.3	37.0	39.5	33.8	34.5	36.1	38.5	33.0	33.7	35.3	37.6	32.2	32.9	34.4	36.7	30.6	31.2	32.7	34.9	28.4	28.9	30.3	32.3
		S/T	0.89	0.86	0.77	0.63	0.92	0.89	0.80	0.65	0.94	0.91	0.82	0.67	0.97	0.94	0.85	0.69	1.00	0.97	0.88	0.71	1.00	0.98	0.89	0.72
		ΔT	28	27	26	22	28	27	26	22	28	27	26	22	28	28	26	23	27	27	26	22	25	25	24	21
		kW	2.05	2.10	2.17	2.24	2.22	2.27	2.35	2.43	2.37	2.43	2.51	2.60	2.50	2.56	2.65	2.75	2.62	2.68	2.77	2.87	2.71	2.78	2.88	2.98
		Amps	8.1	8.3	8.5	8.9	8.7	9.0	9.3	9.6	9.5	9.8	10.1	10.5	10.2	10.5	10.8	11.2	10.9	11.2	11.5	12.0	11.6	11.8	12.3	12.7
		HI PR	216	232	235	241	244	262	266	272	278	298	303	309	316	340	345	352	341	367	372	380	405	435	441	451
		Lo PR	116	120	131	139	120	123	135	143	124	127	139	148	127	131	143	152	129	134	146	155	133	137	149	159

IDB = Entering Indoor Dry Bulb Temperature

Shaded area reflects AHRI (TVA) conditions

kW = Total system power

High and low pressures are measured at the liquid and suction service valves.

Amps = outdoor unit amps (comp.+fan)

Expanded Cooling Data — DSXC180481A* / CA*F4961*6**+TXV / MBVC2000**-1 Low Stage

			Outdoor Ambient Temperature																							
			65ºF				75ºF				85ºF				95ºF				105ºF				115ºF			
			Entering Indoor Wet Bulb Temperature																							
IDB	Airflow		59	63	67	71	59	63	67	71	59	63	67	71	59	63	67	71	59	63	67	71	59	63	67	71
70	1325	MBh	34.6	35.8	39.3	-	33.8	35.0	38.3	-	33.0	34.2	37.4	-	32.2	33.3	36.5	-	30.5	31.7	34.7	-	28.3	29.3	32.1	-
		S/T	0.76	0.64	0.44	-	0.79	0.66	0.46	-	0.81	0.68	0.47	-	0.83	0.70	0.48	-	0.87	0.72	0.50	-	0.87	0.73	0.51	-
		ΔT	18	16	12	-	18	16	12	-	18	16	12	-	19	16	12	-	18	16	12	-	17	15	11	-
		kW	1.87	1.91	1.97	-	2.02	2.07	2.14	-	2.16	2.21	2.29	-	2.28	2.34	2.42	-	2.39	2.44	2.53	-	2.47	2.53	2.62	-
		Amps	7.2	7.4	7.6	-	7.8	8.0	8.3	-	8.5	8.7	9.0	-	9.1	9.4	9.7	-	9.7	10.0	10.3	-	10.4	10.6	11.0	-
		HI PR	216	232	235	-	244	262	266	-	277	298	303	-	316	340	345	-	356	382	388	-	398	428	434	-
		Lo PR	121	125	137	-	125	129	141	-	129	133	146	-	133	137	149	-	135	140	152	-	139	143	156	-
	1175	MBh	33.6	34.8	38.1	-	32.8	34.0	37.2	-	32.0	33.2	36.3	-	31.2	32.4	35.5	-	29.7	30.7	33.7	-	27.5	28.5	31.2	-
		S/T	0.73	0.61	0.42	-	0.75	0.63	0.44	-	0.77	0.64	0.45	-	0.80	0.66	0.46	-	0.83	0.69	0.48	-	0.83	0.70	0.48	-
		ΔT	19	16	13	-	19	17	13	-	19	17	13	-	19	17	13	-	19	17	13	-	18	16	12	-
		kW	1.85	1.89	1.96	-	2.00	2.05	2.12	-	2.14	2.19	2.27	-	2.26	2.32	2.40	-	2.36	2.42	2.51	-	2.45	2.51	2.60	-
		Amps	7.1	7.3	7.6	-	7.7	7.9	8.2	-	8.4	8.7	9.0	-	9.0	9.3	9.6	-	9.7	9.9	10.2	-	10.3	10.5	10.9	-
		HI PR	214	230	233	-	242	260	263	-	275	295	300	-	313	336	341	-	352	378	384	-	394	424	430	-
		Lo PR	120	124	135	-	124	128	139	-	128	132	144	-	131	136	148	-	134	138	151	-	137	142	155	-
	1025	MBh	31.0	32.1	35.2	-	30.3	31.4	34.4	-	29.5	30.6	33.5	-	28.8	29.9	32.7	-	27.4	28.4	31.1	-	25.4	26.3	28.8	-
		S/T	0.70	0.58	0.40	-	0.73	0.61	0.42	-	0.74	0.62	0.43	-	0.77	0.64	0.44	-	0.80	0.67	0.46	-	0.80	0.67	0.46	-
		ΔT	19	17	13	-	20	17	13	-	20	17	13	-	20	17	13	-	20	17	13	-	18	16	12	-
		kW	1.83	1.88	1.94	-	1.99	2.03	2.10	-	2.12	2.17	2.25	-	2.24	2.29	2.38	-	2.34	2.40	2.48	-	2.43	2.49	2.58	-
		Amps	7.1	7.2	7.5	-	7.7	7.9	8.1	-	8.4	8.6	8.9	-	9.0	9.2	9.5	-	9.6	9.8	10.1	-	10.2	10.4	10.8	-
		HI PR	212	227	231	-	239	257	261	-	272	292	297	-	310	333	338	-	348	375	380	-	390	420	426	-
		Lo PR	119	123	134	-	123	126	138	-	127	131	143	-	130	134	147	-	133	137	149	-	136	140	153	-
75	1325	MBh	35.2	36.2	39.2	42.0	34.3	35.4	38.3	41.1	33.5	34.5	37.4	40.1	32.7	**33.7**	36.4	39.1	31.1	32.0	34.6	37.2	28.8	29.6	32.1	34.4
		S/T	0.86	0.77	0.59	0.38	0.90	0.80	0.61	0.39	0.92	0.82	0.62	0.40	0.95	**0.85**	0.64	0.41	0.98	0.88	0.67	0.43	0.99	0.89	0.67	0.43
		ΔT	21	19	16	11	21	20	16	11	21	20	16	11	22	**20**	16	11	21	20	16	11	20	18	15	10
		kW	1.87	1.91	1.97	2.04	2.02	2.07	2.14	2.22	2.16	2.21	2.29	2.37	2.28	**2.34**	2.42	2.51	2.39	2.44	2.53	2.62	2.47	2.53	2.62	2.72
		Amps	7.2	7.4	7.6	7.9	7.8	8.0	8.3	8.6	8.5	8.7	9.0	9.4	9.1	**9.4**	9.7	10.1	9.7	10.0	10.3	10.8	10.4	10.6	11.0	11.4
		HI PR	216	232	235	241	244	262	266	272	277	298	303	309	316	**340**	345	352	356	382	388	396	398	428	434	444
		Lo PR	121	125	137	146	125	129	141	150	129	133	146	155	133	**137**	149	159	135	140	152	162	139	143	156	166
	1175	MBh	34.1	35.1	38.0	40.8	33.3	34.3	37.2	39.9	32.5	33.5	36.3	38.9	31.7	**32.7**	35.4	38.0	30.2	31.1	33.6	36.1	27.9	28.8	31.1	33.4
		S/T	0.82	0.74	0.56	0.36	0.85	0.76	0.58	0.37	0.88	0.78	0.59	0.38	0.90	**0.81**	0.61	0.39	0.94	0.84	0.64	0.41	0.95	0.85	0.64	0.41
		ΔT	22	20	17	11	22	21	17	12	22	21	17	12	22	**21**	17	12	22	20	17	12	21	19	16	11
		kW	1.85	1.89	1.96	2.03	2.00	2.05	2.12	2.20	2.14	2.19	2.27	2.35	2.26	**2.32**	2.40	2.48	2.36	2.42	2.51	2.60	2.45	2.51	2.60	2.69
		Amps	7.1	7.3	7.6	7.9	7.7	7.9	8.2	8.5	8.4	8.7	9.0	9.3	9.0	**9.3**	9.6	10.0	9.7	9.9	10.2	10.6	10.3	10.5	10.9	11.3
		HI PR	214	230	233	238	242	260	263	269	275	295	300	306	313	**336**	341	349	352	378	384	392	394	424	430	439
		Lo PR	120	124	135	144	124	128	139	148	128	132	144	154	131	**136**	148	158	134	138	151	161	137	142	155	165
	1025	MBh	31.5	32.4	35.1	37.7	30.8	31.7	34.3	36.8	30.0	30.9	33.5	35.9	29.3	**30.2**	32.7	35.1	27.8	28.7	31.0	33.3	25.8	26.6	28.7	30.8
		S/T	0.80	0.71	0.54	0.35	0.82	0.74	0.56	0.36	0.85	0.76	0.57	0.37	0.87	**0.78**	0.59	0.38	0.91	0.81	0.61	0.39	0.91	0.82	0.62	0.40
		ΔT	22	21	17	12	23	21	17	12	23	21	17	12	23	**21**	17	12	23	21	17	12	21	19	16	11
		kW	1.83	1.88	1.94	2.01	1.99	2.03	2.10	2.18	2.12	2.17	2.25	2.33	2.24	**2.29**	2.38	2.46	2.34	2.40	2.48	2.57	2.43	2.49	2.58	2.67
		Amps	7.1	7.2	7.5	7.8	7.7	7.9	8.1	8.4	8.4	8.6	8.9	9.2	9.0	**9.2**	9.5	9.9	9.6	9.8	10.1	10.5	10.2	10.4	10.8	11.2
		HI PR	212	227	231	236	239	257	261	267	272	292	297	303	310	**333**	338	345	348	375	380	388	390	420	426	435
		Lo PR	119	123	134	143	123	126	138	147	127	131	143	152	130	**134**	147	156	133	137	149	159	136	140	153	163

IDB = Entering Indoor Dry Bulb Temperature

High and low pressures are measured at the liquid and suction service valves.

Shaded area reflects ACCA (TVA) conditions

kW = Total system power

Amps = outdoor unit amps (comp.+fan)

Expanded Cooling Data — DSXC180481A* / CA*F4961*6**+TXV / MBVC2000**-1 Low Stage (cont.)

			Outdoor Ambient Temperature																							
			65ºF				75ºF				85ºF				95ºF				105ºF				115ºF			
			Entering Indoor Wet Bulb Temperature																							
IDB	Airflow		59	63	67	71	59	63	67	71	59	63	67	71	59	63	67	71	59	63	67	71	59	63	67	71
80	1325	MBh	35.8	36.6	39.1	41.8	34.9	35.7	38.2	40.8	34.1	34.9	37.2	39.8	33.3	34.0	36.3	38.8	31.6	32.3	34.5	36.9	29.3	29.9	32.0	34.2
		S/T	0.95	0.89	0.72	0.54	1.00	0.92	0.75	0.56	1.00	0.95	0.77	0.58	1.00	1.00	0.79	0.59	1.00	1.00	0.82	0.62	1.00	1.00	0.83	0.62
		ΔT	24	23	20	16	24	23	20	16	24	23	20	16	23	24	20	16	22	22	20	16	20	21	18	15
		kW	1.87	1.91	1.97	2.04	2.02	2.07	2.14	2.22	2.16	2.21	2.29	2.37	2.28	2.34	2.42	2.51	2.39	2.44	2.53	2.62	2.47	2.53	2.62	2.72
		Amps	7.2	7.4	7.6	7.9	7.8	8.0	8.3	8.6	8.5	8.7	9.0	9.4	9.1	9.4	9.7	10.1	9.7	10.0	10.3	10.8	10.4	10.6	11.0	11.4
		HI PR	216	232	235	241	244	262	266	272	277	298	303	309	316	340	345	352	356	382	388	396	398	428	434	444
		Lo PR	121	125	137	146	125	129	141	150	129	133	146	155	133	137	149	159	135	140	152	162	139	143	156	166
	1175	MBh	34.7	35.5	37.9	40.5	33.9	34.7	37.0	39.6	33.1	33.8	36.2	38.7	32.3	33.0	**35.3**	37.7	30.7	31.4	33.5	35.8	28.4	29.1	31.0	33.2
		S/T	0.90	0.85	0.69	0.52	0.94	0.88	0.72	0.53	0.96	0.90	0.73	0.55	0.99	0.93	**0.76**	0.57	1.00	0.97	0.79	0.59	1.00	0.97	0.79	0.59
		ΔT	25	24	20	16	25	24	21	17	25	24	21	17	25	24	**21**	17	24	24	21	16	22	22	19	15
		kW	1.85	1.89	1.96	2.03	2.00	2.05	2.12	2.20	2.14	2.19	2.27	2.35	2.26	2.32	**2.40**	2.48	2.36	2.42	2.51	2.60	2.45	2.51	2.60	2.69
		Amps	7.1	7.3	7.6	7.9	7.7	7.9	8.2	8.5	8.4	8.7	9.0	9.3	9.0	9.3	**9.6**	10.0	9.7	9.9	10.2	10.6	10.3	10.5	10.9	11.3
		HI PR	214	230	233	238	242	260	263	269	275	295	300	306	313	336	**341**	349	352	378	384	392	394	424	430	439
		Lo PR	120	124	135	144	124	128	139	148	128	132	144	154	131	136	**148**	158	134	138	151	161	137	142	155	165
	1025	MBh	32.1	32.8	35.0	37.4	31.3	32.0	34.2	36.5	30.6	31.2	33.4	35.7	29.8	30.5	32.6	34.8	28.3	29.0	30.9	33.1	26.2	26.8	28.7	30.6
		S/T	0.87	0.82	0.67	0.50	0.90	0.85	0.69	0.52	0.93	0.87	0.71	0.53	0.96	0.90	0.73	0.55	0.99	0.93	0.76	0.57	1.00	0.94	0.76	0.57
		ΔT	25	24	21	17	25	24	21	17	25	24	21	17	26	25	21	17	25	24	21	17	24	23	20	16
		kW	1.83	1.88	1.94	2.01	1.99	2.03	2.10	2.18	2.12	2.17	2.25	2.33	2.24	2.29	2.38	2.46	2.34	2.40	2.48	2.57	2.43	2.49	2.58	2.67
		Amps	7.1	7.2	7.5	7.8	7.7	7.9	8.1	8.4	8.4	8.6	8.9	9.2	9.0	9.2	9.5	9.9	9.6	9.8	10.1	10.5	10.2	10.4	10.8	11.2
		HI PR	212	227	231	236	239	257	261	267	272	292	297	303	310	333	338	345	348	375	380	388	390	420	426	435
		Lo PR	119	123	134	143	123	126	138	147	127	131	143	152	130	134	147	156	133	137	149	159	136	140	153	163
85	1325	MBh	36.4	37.1	38.9	41.5	35.6	36.2	38.0	40.5	34.7	35.4	37.1	39.5	33.9	34.5	36.2	38.6	32.2	32.8	34.3	36.6	29.8	30.4	31.8	33.9
		S/T	0.99	0.96	0.87	0.70	1.00	0.99	0.90	0.73	1.00	1.00	0.92	0.75	1.00	1.00	0.95	0.77	1.00	1.00	0.99	0.80	1.00	1.00	0.99	0.81
		ΔT	25	25	23	20	25	25	24	20	24	25	24	20	23	24	24	21	22	23	23	20	21	21	22	19
		kW	1.87	1.91	1.97	2.04	2.02	2.07	2.14	2.22	2.16	2.21	2.29	2.37	2.28	2.34	2.42	2.51	2.39	2.44	2.53	2.62	2.47	2.53	2.62	2.72
		Amps	7.2	7.4	7.6	7.9	7.8	8.0	8.3	8.6	8.5	8.7	9.0	9.4	9.1	9.4	9.7	10.1	9.7	10.0	10.3	10.8	10.4	10.6	11.0	11.4
		HI PR	216	232	235	241	244	262	266	272	277	298	303	309	316	340	345	352	356	382	388	396	398	428	434	444
		Lo PR	121	125	137	146	125	129	141	150	129	133	146	155	133	137	149	159	135	140	152	162	139	143	156	166
	1175	MBh	35.3	36.0	37.7	40.3	34.5	35.2	36.9	39.3	33.7	34.4	36.0	38.4	32.9	33.5	35.1	37.4	31.2	31.8	33.3	35.6	28.9	29.5	30.9	33.0
		S/T	0.95	0.92	0.83	0.67	0.98	0.95	0.86	0.69	1.00	0.97	0.88	0.71	1.00	1.00	0.91	0.74	1.00	1.00	0.94	0.76	1.00	1.00	0.95	0.77
		ΔT	26	26	24	21	27	26	25	21	26	26	25	21	26	26	25	22	24	25	25	21	23	23	23	20
		kW	1.85	1.89	1.96	2.03	2.00	2.05	2.12	2.20	2.14	2.19	2.27	2.35	2.26	2.32	2.40	2.48	2.36	2.42	2.51	2.60	2.45	2.51	2.60	2.69
		Amps	7.1	7.3	7.6	7.9	7.7	7.9	8.2	8.5	8.4	8.7	9.0	9.3	9.0	9.3	9.6	10.0	9.7	9.9	10.2	10.6	10.3	10.5	10.9	11.3
		HI PR	214	230	233	238	242	260	263	269	275	295	300	306	313	336	341	349	352	378	384	392	394	424	430	439
		Lo PR	120	124	135	144	124	128	139	148	128	132	144	154	131	136	148	158	134	138	151	161	137	142	155	165
	1025	MBh	32.6	33.3	34.8	37.2	31.9	32.5	34.0	36.3	31.1	31.7	33.2	35.4	30.3	30.9	32.4	34.6	28.8	29.4	30.8	32.8	26.7	27.2	28.5	30.4
		S/T	0.91	0.88	0.80	0.65	0.95	0.91	0.83	0.67	0.97	0.94	0.85	0.69	1.00	0.97	0.87	0.71	1.00	1.00	0.91	0.74	1.00	1.00	0.91	0.74
		ΔT	26.8	26	25	22	27	27	25	22	27	27	25	22	27	27	25	22	26	26	25	22	24	24	23	20
		kW	1.83	1.88	1.94	2.01	1.99	2.03	2.10	2.18	2.12	2.17	2.25	2.33	2.24	2.29	2.38	2.46	2.34	2.40	2.48	2.57	2.43	2.49	2.58	2.67
		Amps	7.1	7.2	7.5	7.8	7.7	7.9	8.1	8.4	8.4	8.6	8.9	9.2	9.0	9.2	9.5	9.9	9.6	9.8	10.1	10.5	10.2	10.4	10.8	11.2
		HI PR	212	227	231	236	239	257	261	267	272	292	297	303	310	333	338	345	348	375	380	388	390	420	426	435
		Lo PR	119	123	134	143	123	126	138	147	127	131	143	152	130	134	147	156	133	137	149	159	136	140	153	163

IDB = Entering Indoor Dry Bulb Temperature

Shaded area reflects AHRI (TVA) conditions

kW = Total system power

High and low pressures are measured at the liquid and suction service valves.

Amps = outdoor unit amps (comp.+fan)

Expanded Cooling Data — DSXC180481A* / CA*F4961*6**+TXV / MBVC2000**-1 High Stage

			Outdoor Ambient Temperature																							
			65ºF				75ºF				85ºF				95ºF				105ºF				115ºF			
			Entering Indoor Wet Bulb Temperature																							
IDB	Airflow		59	63	67	71	59	63	67	71	59	63	67	71	59	63	67	71	59	63	67	71	59	63	67	71
70	1970	MBh	48.2	50.0	54.8	-	47.1	48.8	53.5	-	46.0	47.7	52.2	-	44.9	46.5	50.9	-	42.6	44.2	48.4	-	39.5	40.9	44.8	-
		S/T	0.77	0.64	0.44	-	0.79	0.66	0.46	-	0.81	0.68	0.47	-	0.84	0.70	0.49	-	0.87	0.73	0.50	-	0.88	0.73	0.51	-
		ΔT	17	15	11	-	17	15	11	-	17	15	11	-	18	15	12	-	17	15	11	-	16	14	11	-
		kW	2.87	2.94	3.03	-	3.10	3.17	3.27	-	3.30	3.37	3.48	-	3.47	3.55	3.67	-	3.62	3.70	3.83	-	3.75	3.84	3.97	-
		Amps	10.2	10.5	10.8	-	11.1	11.4	11.7	-	12.1	12.4	12.8	-	13.0	13.3	13.7	-	13.8	14.2	14.7	-	14.7	15.1	15.6	-
		HI PR	228	245	248	-	257	277	280	-	292	315	319	-	333	358	363	-	375	403	409	-	420	451	458	-
		Lo PR	121	124	136	-	124	128	140	-	128	132	145	-	132	136	148	-	134	139	151	-	138	142	155	-
	1750	MBh	46.8	48.5	53.2	-	45.7	47.4	51.9	-	44.6	46.3	50.7	-	43.5	45.1	49.5	-	41.4	42.9	47.0	-	38.3	39.7	43.5	-
		S/T	0.73	0.61	0.42	-	0.76	0.63	0.44	-	0.78	0.65	0.45	-	0.80	0.67	0.46	-	0.83	0.69	0.48	-	0.84	0.70	0.48	-
		ΔT	18	16	12	-	18	16	12	-	18	16	12	-	18	16	12	-	18	16	12	-	17	15	11	-
		kW	2.85	2.91	3.01	-	3.07	3.14	3.24	-	3.27	3.34	3.45	-	3.44	3.52	3.64	-	3.59	3.67	3.80	-	3.72	3.80	3.93	-
		Amps	10.1	10.4	10.7	-	11.0	11.2	11.6	-	12.0	12.3	12.7	-	12.8	13.2	13.6	-	13.7	14.0	14.5	-	14.5	14.9	15.4	-
		HI PR	225	242	246	-	255	274	278	-	290	311	316	-	330	355	360	-	371	399	405	-	416	447	453	-
		Lo PR	119	123	134	-	123	127	138	-	127	131	143	-	130	135	147	-	133	137	150	-	136	141	154	-
	1530	MBh	43.2	44.8	49.1	-	42.2	43.7	47.9	-	41.2	42.7	46.8	-	40.2	41.7	45.6	-	38.2	39.6	43.4	-	35.4	36.7	40.2	-
		S/T	0.70	0.59	0.41	-	0.73	0.61	0.42	-	0.75	0.62	0.43	-	0.77	0.64	0.45	-	0.80	0.67	0.46	-	0.81	0.67	0.47	-
		ΔT	18	16	12	-	19	16	12	-	19	16	12	-	19	16	12	-	18	16	12	-	17	15	11	-
		kW	2.83	2.89	2.98	-	3.05	3.12	3.22	-	3.24	3.32	3.43	-	3.42	3.49	3.61	-	3.56	3.64	3.76	-	3.69	3.77	3.90	-
		Amps	10.0	10.3	10.6	-	10.9	11.1	11.5	-	11.9	12.2	12.6	-	12.7	13.0	13.5	-	13.6	13.9	14.4	-	14.4	14.8	15.3	-
		HI PR	223	240	243	-	252	271	275	-	287	308	313	-	327	351	356	-	367	395	401	-	411	442	449	-
		Lo PR	118	122	133	-	122	125	137	-	126	130	142	-	129	133	145	-	132	136	148	-	135	139	152	-
75	1970	MBh	49.0	50.5	54.6	58.7	47.9	49.3	53.4	57.3	46.8	48.1	52.1	55.9	45.6	**47.0**	50.8	54.6	43.3	44.6	48.3	51.8	40.1	41.3	44.7	48.0
		S/T	0.87	0.78	0.59	0.38	0.90	0.81	0.61	0.39	0.92	0.83	0.63	0.40	0.95	**0.85**	0.65	0.42	0.99	0.89	0.67	0.43	1.00	0.89	0.68	0.44
		ΔT	20	18	15	10	20	19	15	10	20	19	15	11	20	**19**	15	11	20	18	15	10	19	17	14	10
		kW	2.87	2.94	3.03	3.13	3.10	3.17	3.27	3.38	3.30	3.37	3.48	3.60	3.47	**3.55**	3.67	3.80	3.62	3.70	3.83	3.96	3.75	3.84	3.97	4.10
		Amps	10.2	10.5	10.8	11.2	11.1	11.4	11.7	12.2	12.1	12.4	12.8	13.3	13.0	**13.3**	13.7	14.3	13.8	14.2	14.7	15.3	14.7	15.1	15.6	16.2
		HI PR	228	245	248	254	257	277	280	287	292	315	319	326	333	**358**	363	371	375	403	409	418	420	451	458	468
		Lo PR	121	124	136	145	124	128	140	149	128	132	145	154	132	**136**	148	158	134	139	151	161	138	142	155	165
	1750	MBh	47.6	49.0	53.1	56.9	46.5	47.9	51.8	55.6	45.4	46.7	50.6	54.3	44.3	**45.6**	49.4	53.0	42.1	43.3	46.9	50.3	39.0	40.1	43.4	46.6
		S/T	0.83	0.74	0.56	0.36	0.86	0.77	0.58	0.37	0.88	0.79	0.60	0.38	0.91	**0.81**	0.62	0.40	0.94	0.84	0.64	0.41	0.95	0.85	0.64	0.41
		ΔT	21	19	16	11	21	19	16	11	21	19	16	11	21	**20**	16	11	21	19	16	11	20	18	15	10
		kW	2.85	2.91	3.01	3.10	3.07	3.14	3.24	3.35	3.27	3.34	3.45	3.57	3.44	**3.52**	3.64	3.76	3.59	3.67	3.80	3.93	3.72	3.80	3.93	4.07
		Amps	10.1	10.4	10.7	11.1	11.0	11.2	11.6	12.1	12.0	12.3	12.7	13.2	12.8	**13.2**	13.6	14.2	13.7	14.0	14.5	15.1	14.5	14.9	15.4	16.0
		HI PR	225	242	246	251	255	274	278	284	290	311	316	323	330	**355**	360	368	371	399	405	414	416	447	453	463
		Lo PR	119	123	134	143	123	127	138	147	127	131	143	152	130	**135**	147	156	133	137	150	160	136	141	154	163
	1530	MBh	43.9	45.2	49.0	52.6	42.9	44.2	47.8	51.3	41.9	43.1	46.7	50.1	40.9	**42.1**	45.6	48.9	38.8	40.0	43.3	46.4	36.0	37.0	40.1	43.0
		S/T	0.80	0.72	0.54	0.35	0.83	0.74	0.56	0.36	0.85	0.76	0.58	0.37	0.88	**0.79**	0.59	0.38	0.91	0.81	0.62	0.40	0.92	0.82	0.62	0.40
		ΔT	21	19	16	11	21	20	16	11	21	20	16	11	22	**20**	16	11	21	20	16	11	20	18	15	10
		kW	2.83	2.89	2.98	3.08	3.05	3.12	3.22	3.32	3.24	3.32	3.43	3.54	3.42	**3.49**	3.61	3.73	3.56	3.64	3.76	3.89	3.69	3.77	3.90	4.03
		Amps	10.0	10.3	10.6	11.0	10.9	11.1	11.5	12.0	11.9	12.2	12.6	13.1	12.7	**13.0**	13.5	14.0	13.6	13.9	14.4	15.0	14.4	14.8	15.3	15.9
		HI PR	223	240	243	249	252	271	275	281	287	308	313	320	327	**351**	356	364	367	395	401	409	411	442	449	459
		Lo PR	118	122	133	142	122	125	137	146	126	130	142	151	129	**133**	145	155	132	136	148	158	135	139	152	162

IDB = Entering Indoor Dry Bulb Temperature

Shaded area reflects ACCA (TVA) conditions

kW = Total system power

High and low pressures are measured at the liquid and suction service valves.

Amps = outdoor unit amps (comp.+fan)

Expanded Cooling Data — DSXC180481A* / CA*F4961*6**+TXV / MBVC2000**-1 High Stage (cont.)

			Outdoor Ambient Temperature																							
			65ºF				75ºF				85ºF				95ºF				105ºF				115ºF			
			Entering Indoor Wet Bulb Temperature																							
IDB	Airflow		59	63	67	71	59	63	67	71	59	63	67	71	59	63	67	71	59	63	67	71	59	63	67	71
80	1970	MBh	49.9	51.0	54.5	58.2	48.7	49.8	53.2	56.9	47.6	48.6	52.0	55.5	46.4	47.4	50.7	54.2	44.1	45.1	48.1	51.5	40.9	41.7	44.6	47.7
		S/T	0.95	0.89	0.73	0.54	1.00	0.93	0.75	0.56	1.00	0.95	0.77	0.58	1.00	1.00	0.80	0.60	1.00	1.00	0.83	0.62	1.00	1.00	0.84	0.63
		ΔT	22	21	19	15	23	22	19	15	22	22	19	15	22	22	19	15	21	21	19	15	19	19	17	14
		kW	2.87	2.94	3.03	3.13	3.10	3.17	3.27	3.38	3.30	3.37	3.48	3.60	3.47	3.55	3.67	3.80	3.62	3.70	3.83	3.96	3.75	3.84	3.97	4.10
		Amps	10.2	10.5	10.8	11.2	11.1	11.4	11.7	12.2	12.1	12.4	12.8	13.3	13.0	13.3	13.7	14.3	13.8	14.2	14.7	15.3	14.7	15.1	15.6	16.2
		HI PR	228	245	248	254	257	277	280	287	292	315	319	326	333	358	363	371	375	403	409	418	420	451	458	468
		Lo PR	121	124	136	145	124	128	140	149	128	132	145	154	132	136	148	158	134	139	151	161	138	142	155	165
	1750	MBh	48.5	49.5	52.9	56.5	47.3	48.4	51.7	55.2	46.2	47.2	50.4	53.9	45.1	46.1	**49.2**	52.6	42.8	43.8	46.7	50.0	39.7	40.5	43.3	46.3
		S/T	0.91	0.85	0.69	0.52	0.94	0.88	0.72	0.54	0.97	0.91	0.74	0.55	1.00	0.94	**0.76**	0.57	1.00	0.97	0.79	0.59	1.00	0.98	0.80	0.60
		ΔT	23	22	19	15	23	22	20	16	23	22	20	16	24	23	**20**	16	22	22	19	16	21	21	18	14
		kW	2.85	2.91	3.01	3.10	3.07	3.14	3.24	3.35	3.27	3.34	3.45	3.57	3.44	3.52	**3.64**	3.76	3.59	3.67	3.80	3.93	3.72	3.80	3.93	4.07
		Amps	10.1	10.4	10.7	11.1	11.0	11.2	11.6	12.1	12.0	12.3	12.7	13.2	12.8	13.2	**13.6**	14.2	13.7	14.0	14.5	15.1	14.5	14.9	15.4	16.0
		HI PR	225	242	246	251	255	274	278	284	290	311	316	323	330	355	**360**	368	371	399	405	414	416	447	453	463
		Lo PR	119	123	134	143	123	127	138	147	127	131	143	152	130	135	**147**	156	133	137	150	160	136	141	154	163
	1530	MBh	44.7	45.7	48.8	52.2	43.7	44.6	47.7	51.0	42.6	43.6	46.6	49.8	41.6	42.5	45.4	48.6	39.5	40.4	43.1	46.1	36.6	37.4	40.0	42.7
		S/T	0.88	0.82	0.67	0.50	0.91	0.85	0.69	0.52	0.93	0.87	0.71	0.53	0.96	0.90	0.73	0.55	1.00	0.94	0.76	0.57	1.01	0.94	0.77	0.57
		ΔT	24	23	20	16	24	23	20	16	24	23	20	16	24	23	20	16	24	23	20	16	22	21	18	15
		kW	2.83	2.89	2.98	3.08	3.05	3.12	3.22	3.32	3.24	3.32	3.43	3.54	3.42	3.49	3.61	3.73	3.56	3.64	3.76	3.89	3.69	3.77	3.90	4.03
		Amps	10.0	10.3	10.6	11.0	10.9	11.1	11.5	12.0	11.9	12.2	12.6	13.1	12.7	13.0	13.5	14.0	13.6	13.9	14.4	15.0	14.4	14.8	15.3	15.9
		HI PR	223	240	243	249	252	271	275	281	287	308	313	320	327	351	356	364	367	395	401	409	411	442	449	459
		Lo PR	118	122	133	142	122	125	137	146	126	130	142	151	129	133	145	155	132	136	148	158	135	139	152	162
85	1970	MBh	50.8	51.8	54.2	57.8	49.6	50.6	53.0	56.5	48.4	49.4	51.7	55.1	47.2	48.2	50.4	53.8	44.9	45.7	47.9	51.1	41.6	42.4	44.4	47.3
		S/T	1.00	0.97	0.87	0.71	1.00	1.00	0.90	0.73	1.00	1.00	0.93	0.75	1.00	1.00	0.96	0.78	1.00	1.00	0.99	0.80	1.00	1.00	1.00	0.81
		ΔT	24	23	22	19	23	24	22	19	23	23	22	19	22	22	22	19	21	21	22	19	19	20	21	18
		kW	2.87	2.94	3.03	3.13	3.10	3.17	3.27	3.38	3.30	3.37	3.48	3.60	3.47	3.55	3.67	3.80	3.62	3.70	3.83	3.96	3.75	3.84	3.97	4.10
		Amps	10.2	10.5	10.8	11.2	11.1	11.4	11.7	12.2	12.1	12.4	12.8	13.3	13.0	13.3	13.7	14.3	13.8	14.2	14.7	15.3	14.7	15.1	15.6	16.2
		HI PR	228	245	248	254	257	277	280	287	292	315	319	326	333	358	363	371	375	403	409	418	420	451	458	468
		Lo PR	121	124	136	145	124	128	140	149	128	132	145	154	132	136	148	158	134	139	151	161	138	142	155	165
	1750	MBh	49.3	50.3	52.6	56.2	48.2	49.1	51.4	54.8	47.0	47.9	50.2	53.5	45.9	46.7	49.0	52.2	43.6	44.4	46.5	49.6	40.4	41.1	43.1	46.0
		S/T	0.95	0.92	0.83	0.67	0.99	0.95	0.86	0.70	1.00	0.98	0.88	0.72	1.00	1.00	0.91	0.74	1.00	1.00	0.95	0.77	1.00	1.00	0.95	0.77
		ΔT	25	24	23	20	25	25	23	20	25	25	23	20	24	25	23	20	23	23	23	20	21	22	22	19
		kW	2.85	2.91	3.01	3.10	3.07	3.14	3.24	3.35	3.27	3.34	3.45	3.57	3.44	3.52	3.64	3.76	3.59	3.67	3.80	3.93	3.72	3.80	3.93	4.07
		Amps	10.1	10.4	10.7	11.1	11.0	11.2	11.6	12.1	12.0	12.3	12.7	13.2	12.8	13.2	13.6	14.2	13.7	14.0	14.5	15.1	14.5	14.9	15.4	16.0
		HI PR	225	242	246	251	255	274	278	284	290	311	316	323	330	355	360	368	371	399	405	414	416	447	453	463
		Lo PR	119	123	134	143	123	127	138	147	127	131	143	152	130	135	147	156	133	137	150	160	136	141	154	163
	1530	MBh	45.5	46.4	48.6	51.8	44.4	45.3	47.5	50.6	43.4	44.2	46.3	49.4	42.3	43.1	45.2	48.2	40.2	41.0	42.9	45.8	37.3	38.0	39.8	42.4
		S/T	0.92	0.89	0.80	0.65	0.95	0.92	0.83	0.67	0.98	0.94	0.85	0.69	1.00	0.97	0.88	0.71	1.00	1.00	0.91	0.74	1.00	1.00	0.92	0.75
		ΔT	25	25	23	20	25	25	24	20	25	25	24	21	25	25	24	21	24	25	24	20	22	23	22	19
		kW	2.83	2.89	2.98	3.08	3.05	3.12	3.22	3.32	3.24	3.32	3.43	3.54	3.42	3.49	3.61	3.73	3.56	3.64	3.76	3.89	3.69	3.77	3.90	4.03
		Amps	10.0	10.3	10.6	11.0	10.9	11.1	11.5	12.0	11.9	12.2	12.6	13.1	12.7	13.0	13.5	14.0	13.6	13.9	14.4	15.0	14.4	14.8	15.3	15.9
		HI PR	223	240	243	249	252	271	275	281	287	308	313	320	327	351	356	364	367	395	401	409	411	442	449	459
		Lo PR	118	122	133	142	122	125	137	146	126	130	142	151	129	133	145	155	132	136	148	158	135	139	152	162

IDB = Entering Indoor Dry Bulb Temperature

Shaded area reflects AHRI (TVA) conditions

kW = Total system power

High and low pressures are measured at the liquid and suction service valves.

Amps = outdoor unit amps (comp.+fan)

Expanded Cooling Data — DSXC180601A* / CA*F4961*6** +TXV / MBVC2000**-1 Low Stage

			Outdoor Ambient Temperature																							
			65ºF				75ºF				85ºF				95ºF				105ºF				115ºF			
			Entering Indoor Wet Bulb Temperature																							
IDB	Airflow		59	63	67	71	59	63	67	71	59	63	67	71	59	63	67	71	59	63	67	71	59	63	67	71
70	1520	MBh	42.4	43.9	48.1	-	41.4	42.9	47.0	-	40.4	41.9	45.9	-	39.4	40.8	44.7	-	37.4	38.8	42.5	-	34.7	35.9	39.4	-
		S/T	0.73	0.61	0.42	-	0.75	0.63	0.44	-	0.77	0.65	0.45	-	0.80	0.67	0.46	-	0.83	0.69	0.48	-	0.83	0.70	0.48	-
		ΔT	19	16	12	-	19	16	12	-	19	16	12	-	19	16	12	-	19	16	12	-	17	15	11	-
		kW	2.43	2.49	2.57	-	2.64	2.70	2.79	-	2.82	2.89	2.99	-	2.98	3.05	3.16	-	3.12	3.19	3.31	-	3.24	3.31	3.43	-
		Amps	9.4	9.6	10.0	-	10.2	10.4	10.8	-	11.1	11.4	11.8	-	11.9	12.2	12.6	-	14.0	14.3	14.8	-	14.8	15.1	15.7	-
		HI PR	226	243	247	-	248	267	271	-	291	313	317	-	331	356	361	-	372	400	406	-	430	463	469	-
		Lo PR	118	122	133	-	121	125	137	-	125	129	141	-	129	133	145	-	131	136	148	-	135	139	152	-
	1350	MBh	41.1	42.6	46.7	-	40.2	41.6	45.6	-	39.2	40.6	44.5	-	38.3	39.6	43.4	-	36.3	37.7	41.3	-	33.7	34.9	38.2	-
		S/T	0.69	0.58	0.40	-	0.72	0.60	0.42	-	0.74	0.62	0.43	-	0.76	0.64	0.44	-	0.79	0.66	0.46	-	0.80	0.66	0.46	-
		ΔT	19	17	13	-	20	17	13	-	20	17	13	-	20	17	13	-	20	17	13	-	18	16	12	-
		kW	2.41	2.47	2.55	-	2.61	2.68	2.77	-	2.80	2.86	2.96	-	2.95	3.03	3.13	-	3.09	3.16	3.28	-	3.21	3.28	3.40	-
		Amps	9.3	9.5	9.9	-	10.1	10.3	10.7	-	11.0	11.3	11.7	-	11.8	12.1	12.5	-	13.8	14.2	14.7	-	14.6	15.0	15.5	-
		HI PR	224	241	244	-	246	264	268	-	288	309	314	-	328	352	357	-	369	397	402	-	426	458	465	-
		Lo PR	117	120	131	-	120	124	135	-	124	128	140	-	128	132	144	-	130	134	146	-	133	137	150	-
	1180	MBh	38.0	39.3	43.1	-	37.1	38.4	42.1	-	36.2	37.5	41.1	-	35.3	36.6	40.1	-	33.5	34.8	38.1	-	31.1	32.2	35.3	-
		S/T	0.67	0.56	0.39	-	0.69	0.58	0.40	-	0.71	0.59	0.41	-	0.73	0.61	0.42	-	0.76	0.64	0.44	-	0.77	0.64	0.44	-
		ΔT	20	17	13	-	20	17	13	-	20	17	13	-	20	17	13	-	20	17	13	-	19	16	12	-
		kW	2.39	2.44	2.53	-	2.59	2.65	2.75	-	2.77	2.84	2.94	-	2.93	3.00	3.10	-	3.06	3.14	3.25	-	3.18	3.25	3.37	-
		Amps	9.2	9.4	9.8	-	10.0	10.2	10.6	-	10.9	11.2	11.6	-	11.7	12.0	12.4	-	13.7	14.0	14.5	-	14.5	14.8	15.4	-
		HI PR	222	238	242	-	243	262	265	-	285	306	311	-	325	349	354	-	365	393	398	-	422	454	460	-
		Lo PR	116	119	130	-	119	123	134	-	123	127	138	-	126	130	142	-	129	133	145	-	132	136	149	-
75	1520	MBh	43.1	44.3	48.0	51.5	42.1	43.3	46.9	50.3	41.1	42.3	45.8	49.1	40.1	**41.3**	44.7	47.9	38.1	39.2	42.4	45.5	35.3	36.3	39.3	42.2
		S/T	0.83	0.74	0.56	0.36	0.86	0.77	0.58	0.37	0.88	0.79	0.59	0.38	0.91	**0.81**	0.61	0.39	0.94	0.84	0.64	0.41	0.95	0.85	0.64	0.41
		ΔT	22	20	16	11	22	20	16	11	22	20	16	11	22	**20**	17	11	22	20	16	11	20	19	15	11
		kW	2.43	2.49	2.57	2.67	2.64	2.70	2.79	2.89	2.82	2.89	2.99	3.10	2.98	**3.05**	3.16	3.28	3.12	3.19	3.31	3.43	3.24	3.31	3.43	3.56
		Amps	9.4	9.6	10.0	10.3	10.2	10.4	10.8	11.2	11.1	11.4	11.8	12.2	11.9	**12.2**	12.6	13.1	14.0	14.3	14.8	15.4	14.8	15.1	15.7	16.3
		HI PR	226	243	247	252	248	267	271	277	291	313	317	324	331	**356**	361	369	372	400	406	415	430	463	469	480
		Lo PR	118	122	133	141	121	125	137	146	125	129	141	150	129	**133**	145	154	131	136	148	158	135	139	152	161
	1350	MBh	41.8	43.1	46.6	50.0	40.8	42.1	45.5	48.9	39.9	41.1	44.4	47.7	38.9	**40.1**	43.4	46.5	37.0	38.0	41.2	44.2	34.2	35.2	38.1	40.9
		S/T	0.79	0.70	0.53	0.34	0.82	0.73	0.55	0.36	0.84	0.75	0.57	0.36	0.86	**0.77**	0.59	0.38	0.90	0.80	0.61	0.39	0.90	0.81	0.61	0.39
		ΔT	22	21	17	12	23	21	17	12	23	21	17	12	23	**21**	17	12	23	21	17	12	21	19	16	11
		kW	2.41	2.47	2.55	2.64	2.61	2.68	2.77	2.87	2.80	2.86	2.96	3.07	2.95	**3.03**	3.13	3.25	3.09	3.16	3.28	3.40	3.21	3.28	3.40	3.53
		Amps	9.3	9.5	9.9	10.2	10.1	10.3	10.7	11.1	11.0	11.3	11.7	12.1	11.8	**12.1**	12.5	13.0	13.8	14.2	14.7	15.3	14.6	15.0	15.5	16.1
		HI PR	224	241	244	250	246	264	268	274	288	309	314	321	328	**352**	357	365	369	397	402	411	426	458	465	475
		Lo PR	117	120	131	140	120	124	135	144	124	128	140	149	128	**132**	144	153	130	134	146	156	133	137	150	160
	1180	MBh	38.6	39.7	43.0	46.2	37.7	38.8	42.0	45.1	36.8	37.9	41.0	44.0	35.9	**37.0**	40.0	42.9	34.1	35.1	38.0	40.8	31.6	32.5	35.2	37.8
		S/T	0.76	0.68	0.51	0.33	0.79	0.70	0.53	0.34	0.81	0.72	0.55	0.35	0.83	**0.75**	0.56	0.36	0.87	0.77	0.59	0.38	0.87	0.78	0.59	0.38
		ΔT	23	21	17	12	23	21	17	12	23	21	17	12	23	**21**	18	12	23	21	17	12	21	20	16	11
		kW	2.39	2.44	2.53	2.62	2.59	2.65	2.75	2.84	2.77	2.84	2.94	3.04	2.93	**3.00**	3.10	3.22	3.06	3.14	3.25	3.37	3.18	3.25	3.37	3.49
		Amps	9.2	9.4	9.8	10.1	10.0	10.2	10.6	11.0	10.9	11.2	11.6	12.0	11.7	**12.0**	12.4	12.9	13.7	14.0	14.5	15.1	14.5	14.8	15.4	16.0
		HI PR	222	238	242	247	243	262	265	271	285	306	311	318	325	**349**	354	362	365	393	398	407	422	454	460	470
		Lo PR	116	119	130	139	119	123	134	143	123	127	138	147	126	**130**	142	151	129	133	145	154	132	136	149	158

IDB = Entering Indoor Dry Bulb Temperature

Shaded area reflects ACCA (TVA) conditions

kW = Total system power

High and low pressures are measured at the liquid and suction service valves.

Amps = outdoor unit amps (comp.+fan)

Expanded Cooling Data — DSXC180601A* / CA*F4961*6** +TXV / MBVC2000**-1 Low Stage (cont.)

			Outdoor Ambient Temperature																							
			65ºF				75ºF				85ºF				95ºF				105ºF				115ºF			
			Entering Indoor Wet Bulb Temperature																							
IDB	Airflow		59	63	67	71	59	63	67	71	59	63	67	71	59	63	67	71	59	63	67	71	59	63	67	71
80	1520	MBh	43.8	44.8	47.9	51.2	42.8	43.8	46.7	50.0	41.8	42.7	45.6	48.8	40.8	41.7	44.5	47.6	38.7	39.6	42.3	45.2	35.9	36.7	39.2	41.9
		S/T	0.91	0.85	0.69	0.52	0.94	0.88	0.72	0.54	0.96	0.90	0.74	0.55	1.00	0.93	0.76	0.57	1.00	0.97	0.79	0.59	1.00	1.00	0.79	0.59
		ΔT	24	23	20	16	24	23	20	16	24	23	20	16	25	23	20	16	23	23	20	16	22	22	19	15
		kW	2.43	2.49	2.57	2.67	2.64	2.70	2.79	2.89	2.82	2.89	2.99	3.10	2.98	3.05	3.16	3.28	3.12	3.19	3.31	3.43	3.24	3.31	3.43	3.56
		Amps	9.4	9.6	10.0	10.3	10.2	10.4	10.8	11.2	11.1	11.4	11.8	12.2	11.9	12.2	12.6	13.1	14.0	14.3	14.8	15.4	14.8	15.1	15.7	16.3
		HI PR	226	243	247	252	248	267	271	277	291	313	317	324	331	356	361	369	372	400	406	415	430	463	469	480
		Lo PR	118	122	133	141	121	125	137	146	125	129	141	150	129	133	145	154	131	136	148	158	135	139	152	161
	1350	MBh	42.6	43.5	46.5	49.7	41.6	42.5	45.4	48.5	40.6	41.5	44.3	47.4	39.6	40.5	**43.2**	46.2	37.6	38.4	41.1	43.9	34.8	35.6	38.0	40.7
		S/T	0.86	0.81	0.66	0.49	0.90	0.84	0.68	0.51	0.92	0.86	0.70	0.52	0.95	0.89	**0.72**	0.54	0.98	0.92	0.75	0.56	0.99	0.93	0.76	0.57
		ΔT	25	24	21	17	25	24	21	17	25	24	21	17	26	24	**21**	17	25	24	21	17	24	23	20	16
		kW	2.41	2.47	2.55	2.64	2.61	2.68	2.77	2.87	2.80	2.86	2.96	3.07	2.95	3.03	**3.13**	3.25	3.09	3.16	3.28	3.40	3.21	3.28	3.40	3.53
		Amps	9.3	9.5	9.9	10.2	10.1	10.3	10.7	11.1	11.0	11.3	11.7	12.1	11.8	12.1	**12.5**	13.0	13.8	14.2	14.7	15.3	14.6	15.0	15.5	16.1
		HI PR	224	241	244	250	246	264	268	274	288	309	314	321	328	352	**357**	365	369	397	402	411	426	458	465	475
		Lo PR	117	120	131	140	120	124	135	144	124	128	140	149	128	132	**144**	153	130	134	146	156	133	137	150	160
	1180	MBh	39.3	40.1	42.9	45.8	38.4	39.2	41.9	44.8	37.5	38.3	40.9	43.7	36.5	37.3	39.9	42.6	34.7	35.5	37.9	40.5	32.2	32.9	35.1	37.5
		S/T	0.83	0.78	0.64	0.48	0.86	0.81	0.66	0.49	0.89	0.83	0.68	0.51	0.91	0.86	0.70	0.52	0.95	0.89	0.72	0.54	0.96	0.90	0.73	0.55
		ΔT	26	24	21	17	26	25	22	17	26	25	22	17	26	25	22	17	26	25	21	17	24	23	20	16
		kW	2.39	2.44	2.53	2.62	2.59	2.65	2.75	2.84	2.77	2.84	2.94	3.04	2.93	3.00	3.10	3.22	3.06	3.14	3.25	3.37	3.18	3.25	3.37	3.49
		Amps	9.2	9.4	9.8	10.1	10.0	10.2	10.6	11.0	10.9	11.2	11.6	12.0	11.7	12.0	12.4	12.9	13.7	14.0	14.5	15.1	14.5	14.8	15.4	16.0
		HI PR	222	238	242	247	243	262	265	271	285	306	311	318	325	349	354	362	365	393	398	407	422	454	460	470
		Lo PR	116	119	130	139	119	123	134	143	123	127	138	147	126	130	142	151	129	133	145	154	132	136	149	158
85	1520	MBh	44.6	45.5	47.6	50.8	43.6	44.4	46.5	49.6	42.5	43.4	45.4	48.4	41.5	42.3	44.3	47.3	39.4	40.2	42.1	44.9	36.5	37.2	39.0	41.6
		S/T	0.95	0.92	0.83	0.67	0.98	0.95	0.86	0.70	1.00	0.97	0.88	0.71	1.00	1.00	0.91	0.74	1.00	1.00	0.94	0.76	1.00	1.00	0.95	0.77
		ΔT	26	25	24	21	26	26	24	21	26	26	24	21	25	26	24	21	24	24	24	21	22	23	22	19
		kW	2.43	2.49	2.57	2.67	2.64	2.70	2.79	2.89	2.82	2.89	2.99	3.10	2.98	3.05	3.16	3.28	3.12	3.19	3.31	3.43	3.24	3.31	3.43	3.56
		Amps	9.4	9.6	10.0	10.3	10.2	10.4	10.8	11.2	11.1	11.4	11.8	12.2	11.9	12.2	12.6	13.1	14.0	14.3	14.8	15.4	14.8	15.1	15.7	16.3
		HI PR	226	243	247	252	248	267	271	277	291	313	317	324	331	356	361	369	372	400	406	415	430	463	469	480
		Lo PR	118	122	133	141	121	125	137	146	125	129	141	150	129	133	145	154	131	136	148	158	135	139	152	161
	1350	MBh	43.3	44.1	46.2	49.3	42.3	43.1	45.2	48.2	41.3	42.1	44.1	47.0	40.3	41.1	43.0	45.9	38.3	39.0	40.9	43.6	35.4	36.1	37.8	40.4
		S/T	0.91	0.87	0.79	0.64	0.94	0.91	0.82	0.66	0.96	0.93	0.84	0.68	0.99	0.96	0.87	0.70	1.00	1.00	0.90	0.73	1.00	1.00	0.91	0.73
		ΔT	27	26	25	22	27	27	25	22	27	27	25	22	27	27	25	22	26	26	25	22	24	25	23	20
		kW	2.41	2.47	2.55	2.64	2.61	2.68	2.77	2.87	2.80	2.86	2.96	3.07	2.95	3.03	3.13	3.25	3.09	3.16	3.28	3.40	3.21	3.28	3.40	3.53
		Amps	9.3	9.5	9.9	10.2	10.1	10.3	10.7	11.1	11.0	11.3	11.7	12.1	11.8	12.1	12.5	13.0	13.8	14.2	14.7	15.3	14.6	15.0	15.5	16.1
		HI PR	224	241	244	250	246	264	268	274	288	309	314	321	328	352	357	365	369	397	402	411	426	458	465	475
		Lo PR	117	120	131	140	120	124	135	144	124	128	140	149	128	132	144	153	130	134	146	156	133	137	150	160
	1180	MBh	40.0	40.7	42.7	45.5	39.0	39.8	41.7	44.5	38.1	38.8	40.7	43.4	37.2	37.9	39.7	42.3	35.3	36.0	37.7	40.2	32.7	33.4	34.9	37.3
		S/T	0.87	0.84	0.76	0.62	0.91	0.87	0.79	0.64	0.93	0.90	0.81	0.66	0.96	0.92	0.83	0.68	0.99	0.96	0.87	0.70	1.00	0.97	0.87	0.71
		ΔT	27.2	27	25	22	28	27	26	22	28	27	26	22	28	27	26	22	27	27	25	22	25	25	24	21
		kW	2.39	2.44	2.53	2.62	2.59	2.65	2.75	2.84	2.77	2.84	2.94	3.04	2.93	3.00	3.10	3.22	3.06	3.14	3.25	3.37	3.18	3.25	3.37	3.49
		Amps	9.2	9.4	9.8	10.1	10.0	10.2	10.6	11.0	10.9	11.2	11.6	12.0	11.7	12.0	12.4	12.9	13.7	14.0	14.5	15.1	14.5	14.8	15.4	16.0
		HI PR	222	238	242	247	243	262	265	271	285	306	311	318	325	349	354	362	365	393	398	407	422	454	460	470
		Lo PR	116	119	130	139	119	123	134	143	123	127	138	147	126	130	142	151	129	133	145	154	132	136	149	158

IDB = Entering Indoor Dry Bulb Temperature

Shaded area reflects AHRI (TVA) conditions

kW = Total system power

High and low pressures are measured at the liquid and suction service valves.

Amps = outdoor unit amps (comp.+fan)

Expanded Cooling Data — DSXC180601A* / CA*F4961*6** +TXV / MBVC2000**-1 High Stage

			Outdoor Ambient Temperature																							
			65ºF				75ºF				85ºF				95ºF				105ºF				115ºF			
			Entering Indoor Wet Bulb Temperature																							
IDB	Airflow		59	63	67	71	59	63	67	71	59	63	67	71	59	63	67	71	59	63	67	71	59	63	67	71
70	2250	MBh	58.5	60.6	66.4	-	57.1	59.2	64.9	-	55.8	57.8	63.3	-	54.4	56.4	61.8	-	51.7	53.6	58.7	-	47.9	49.6	54.4	-
		S/T	0.73	0.61	0.42	-	0.76	0.63	0.44	-	0.78	0.65	0.45	-	0.80	0.67	0.47	-	0.83	0.70	0.48	-	0.84	0.70	0.49	-
		ΔT	18	15	12	-	18	15	12	-	18	15	12	-	18	15	12	-	18	15	12	-	16	14	11	-
		kW	3.87	3.96	4.09	-	4.18	4.27	4.41	-	4.45	4.55	4.70	-	4.69	4.80	4.96	-	4.89	5.00	5.17	-	5.07	5.18	5.36	-
		Amps	13.8	14.2	14.7	-	15.0	15.4	15.9	-	16.4	16.8	17.4	-	17.6	18.0	18.7	-	20.6	21.2	21.9	-	21.8	22.4	23.2	-
		HI PR	241	259	263	-	265	285	289	-	310	333	338	-	353	380	385	-	397	427	433	-	459	493	500	-
		Lo PR	115	119	130	-	118	122	133	-	123	126	138	-	126	130	142	-	128	132	144	-	131	136	148	-
	2000	MBh	56.8	58.9	64.5	-	55.5	57.5	63.0	-	54.2	56.1	61.5	-	52.8	54.8	60.0	-	50.2	52.0	57.0	-	46.5	48.2	52.8	-
		S/T	0.70	0.58	0.40	-	0.72	0.60	0.42	-	0.74	0.62	0.43	-	0.77	0.64	0.44	-	0.80	0.66	0.46	-	0.80	0.67	0.46	-
		ΔT	18	16	12	-	18	16	12	-	18	16	12	-	19	16	12	-	18	16	12	-	17	15	11	-
		kW	3.84	3.93	4.05	-	4.15	4.24	4.38	-	4.41	4.51	4.66	-	4.65	4.75	4.91	-	4.85	4.96	5.13	-	5.02	5.14	5.31	-
		Amps	13.7	14.0	14.5	-	14.9	15.2	15.8	-	16.2	16.6	17.2	-	17.4	17.8	18.5	-	20.4	21.0	21.7	-	21.6	22.2	23.0	-
		HI PR	239	257	260	-	262	282	286	-	307	330	335	-	349	376	381	-	393	423	429	-	454	488	495	-
		Lo PR	114	118	128	-	117	121	132	-	121	125	137	-	125	128	140	-	127	131	143	-	130	134	147	-
	1750	MBh	52.4	54.3	59.5	-	51.2	53.1	58.1	-	50.0	51.8	56.8	-	48.8	50.5	55.4	-	46.3	48.0	52.6	-	42.9	44.5	48.7	-
		S/T	0.67	0.56	0.39	-	0.70	0.58	0.40	-	0.72	0.60	0.41	-	0.74	0.62	0.43	-	0.77	0.64	0.44	-	0.77	0.65	0.45	-
		ΔT	19	16	12	-	19	16	12	-	19	16	12	-	19	16	12	-	19	16	12	-	17	15	11	-
		kW	3.81	3.89	4.02	-	4.11	4.20	4.34	-	4.38	4.47	4.62	-	4.61	4.71	4.87	-	4.81	4.92	5.08	-	4.98	5.09	5.27	-
		Amps	13.5	13.9	14.4	-	14.7	15.1	15.6	-	16.1	16.5	17.1	-	17.2	17.7	18.3	-	20.2	20.8	21.5	-	21.4	22.0	22.7	-
		HI PR	236	254	258	-	259	279	283	-	304	327	331	-	346	372	377	-	389	419	424	-	450	484	490	-
		Lo PR	113	116	127	-	116	120	131	-	120	124	135	-	123	127	139	-	126	130	142	-	129	133	145	-
75	2250	MBh	59.5	61.3	66.3	71.2	58.1	59.8	64.8	69.5	56.7	58.4	63.2	67.8	55.3	**57.0**	61.7	66.2	52.6	54.1	58.6	62.9	48.7	50.1	54.3	58.3
		S/T	0.83	0.75	0.56	0.36	0.86	0.77	0.58	0.38	0.89	0.79	0.60	0.39	0.91	**0.82**	0.62	0.40	0.95	0.85	0.64	0.41	0.96	0.86	0.65	0.42
		ΔT	20	19	15	11	20	19	15	11	21	19	15	11	21	**19**	16	11	20	19	15	11	19	18	14	10
		kW	3.87	3.96	4.09	4.22	4.18	4.27	4.41	4.56	4.45	4.55	4.70	4.86	4.69	**4.80**	4.96	5.13	4.89	5.00	5.17	5.35	5.07	5.18	5.36	5.55
		Amps	13.8	14.2	14.7	15.2	15.0	15.4	15.9	16.6	16.4	16.8	17.4	18.1	17.6	**18.0**	18.7	19.4	20.6	21.2	21.9	22.8	21.8	22.4	23.2	24.1
		HI PR	241	259	263	269	265	285	289	295	310	333	338	345	353	**380**	385	393	397	427	433	443	459	493	500	511
		Lo PR	115	119	130	138	118	122	133	142	123	126	138	147	126	**130**	142	151	128	132	144	154	131	136	148	158
	2000	MBh	57.8	59.5	64.4	69.1	56.4	58.1	62.9	67.5	55.1	56.7	61.4	65.9	53.7	**55.3**	59.9	64.3	51.0	52.6	56.9	61.1	47.3	48.7	52.7	56.6
		S/T	0.79	0.71	0.54	0.35	0.82	0.74	0.56	0.36	0.84	0.76	0.57	0.37	0.87	**0.78**	0.59	0.38	0.90	0.81	0.61	0.39	0.91	0.82	0.62	0.40
		ΔT	21	19	16	11	21	20	16	11	21	20	16	11	22	**20**	16	11	21	20	16	11	20	18	15	10
		kW	3.84	3.93	4.05	4.19	4.15	4.24	4.38	4.52	4.41	4.51	4.66	4.82	4.65	**4.75**	4.91	5.08	4.85	4.96	5.13	5.31	5.02	5.14	5.31	5.50
		Amps	13.7	14.0	14.5	15.1	14.9	15.2	15.8	16.4	16.2	16.6	17.2	17.9	17.4	**17.8**	18.5	19.2	20.4	21.0	21.7	22.6	21.6	22.2	23.0	23.9
		HI PR	239	257	260	266	262	282	286	292	307	330	335	342	349	**376**	381	389	393	423	429	438	454	488	495	506
		Lo PR	114	118	128	137	117	121	132	141	121	125	137	145	125	**128**	140	149	127	131	143	152	130	134	147	156
	1750	MBh	53.3	54.9	59.4	63.8	52.1	53.6	58.0	62.3	50.8	52.3	56.7	60.8	49.6	**51.1**	55.3	59.3	47.1	48.5	52.5	56.4	43.6	44.9	48.6	52.2
		S/T	0.77	0.69	0.52	0.33	0.79	0.71	0.54	0.35	0.81	0.73	0.55	0.35	0.84	**0.75**	0.57	0.37	0.87	0.78	0.59	0.38	0.88	0.79	0.60	0.38
		ΔT	21	20	16	11	22	20	16	11	22	20	16	11	22	**20**	17	11	22	20	16	11	20	19	15	11
		kW	3.81	3.89	4.02	4.15	4.11	4.20	4.34	4.49	4.38	4.47	4.62	4.78	4.61	**4.71**	4.87	5.04	4.81	4.92	5.08	5.26	4.98	5.09	5.27	5.45
		Amps	13.5	13.9	14.4	14.9	14.7	15.1	15.6	16.2	16.1	16.5	17.1	17.7	17.2	**17.7**	18.3	19.0	20.2	20.8	21.5	22.3	21.4	22.0	22.7	23.6
		HI PR	236	254	258	263	259	279	283	289	304	327	331	339	346	**372**	377	386	389	419	424	434	450	484	490	501
		Lo PR	113	116	127	135	116	120	131	139	120	124	135	144	123	**127**	139	148	126	130	142	151	129	133	145	155

IDB = Entering Indoor Dry Bulb Temperature

Shaded area reflects ACCA (TVA) conditions

kW = Total system power

High and low pressures are measured at the liquid and suction service valves.

Amps = outdoor unit amps (comp.+fan)

Expanded Cooling Data — DSXC180601A* / CA*F4961*6** +TXV / MBVC2000**-1 High Stage (cont.)

			Outdoor Ambient Temperature																							
			65ºF				75ºF				85ºF				95ºF				105ºF				115ºF			
			Entering Indoor Wet Bulb Temperature																							
IDB	Airflow		59	63	67	71	59	63	67	71	59	63	67	71	59	63	67	71	59	63	67	71	59	63	67	71
80	2250	MBh	60.6	61.9	66.1	70.7	59.1	60.4	64.6	69.0	57.7	59.0	63.0	67.4	56.3	57.6	61.5	65.7	53.5	54.7	58.4	62.4	49.6	50.6	54.1	57.8
		S/T	0.91	0.86	0.70	0.52	0.95	0.89	0.72	0.54	1.00	0.91	0.74	0.55	1.00	0.94	0.77	0.57	1.00	1.00	0.79	0.59	1.00	1.00	0.80	0.60
		ΔT	23	22	19	15	23	22	19	15	24	22	19	15	23	22	19	15	22	22	19	15	20	21	18	14
		kW	3.87	3.96	4.09	4.22	4.18	4.27	4.41	4.56	4.45	4.55	4.70	4.86	4.69	4.80	4.96	5.13	4.89	5.00	5.17	5.35	5.07	5.18	5.36	5.55
		Amps	13.8	14.2	14.7	15.2	15.0	15.4	15.9	16.6	16.4	16.8	17.4	18.1	17.6	18.0	18.7	19.4	20.6	21.2	21.9	22.8	21.8	22.4	23.2	24.1
		HI PR	241	259	263	269	265	285	289	295	310	333	338	345	353	380	385	393	397	427	433	443	459	493	500	511
		Lo PR	115	119	130	138	118	122	133	142	123	126	138	147	126	130	142	151	128	132	144	154	131	136	148	158
	2000	MBh	58.8	60.1	64.2	68.6	57.4	58.7	62.7	67.0	56.1	57.3	61.2	65.4	54.7	55.9	**59.7**	63.8	52.0	53.1	56.7	60.6	48.1	49.2	52.5	56.2
		S/T	0.87	0.82	0.67	0.50	0.90	0.85	0.69	0.52	0.93	0.87	0.71	0.53	0.96	0.90	**0.73**	0.55	0.99	0.93	0.76	0.57	1.00	0.94	0.76	0.57
		ΔT	24	23	20	16	24	23	20	16	24	23	20	16	24	23	**20**	16	24	23	20	16	22	21	18	15
		kW	3.84	3.93	4.05	4.19	4.15	4.24	4.38	4.52	4.41	4.51	4.66	4.82	4.65	4.75	**4.91**	5.08	4.85	4.96	5.13	5.31	5.02	5.14	5.31	5.50
		Amps	13.7	14.0	14.5	15.1	14.9	15.2	15.8	16.4	16.2	16.6	17.2	17.9	17.4	17.8	**18.5**	19.2	20.4	21.0	21.7	22.6	21.6	22.2	23.0	23.9
		HI PR	239	257	260	266	262	282	286	292	307	330	335	342	349	376	**381**	389	393	423	429	438	454	488	495	506
		Lo PR	114	118	128	137	117	121	132	141	121	125	137	145	125	128	**140**	149	127	131	143	152	130	134	147	156
	1750	MBh	54.3	55.4	59.2	63.3	53.0	54.2	57.9	61.9	51.7	52.9	56.5	60.4	50.5	51.6	55.1	58.9	48.0	49.0	52.3	56.0	44.4	45.4	48.5	51.8
		S/T	0.84	0.79	0.64	0.48	0.87	0.82	0.66	0.50	0.89	0.84	0.68	0.51	0.92	0.86	0.70	0.53	0.96	0.90	0.73	0.55	0.96	0.90	0.74	0.55
		ΔT	24	23	20	16	24	23	20	16	24	23	20	16	24	23	20	16	24	23	20	16	23	22	19	15
		kW	3.81	3.89	4.02	4.15	4.11	4.20	4.34	4.49	4.38	4.47	4.62	4.78	4.61	4.71	4.87	5.04	4.81	4.92	5.08	5.26	4.98	5.09	5.27	5.45
		Amps	13.5	13.9	14.4	14.9	14.7	15.1	15.6	16.2	16.1	16.5	17.1	17.7	17.2	17.7	18.3	19.0	20.2	20.8	21.5	22.3	21.4	22.0	22.7	23.6
		HI PR	236	254	258	263	259	279	283	289	304	327	331	339	346	372	377	386	389	419	424	434	450	484	490	501
		Lo PR	113	116	127	135	116	120	131	139	120	124	135	144	123	127	139	148	126	130	142	151	129	133	145	155
85	2250	MBh	61.6	62.8	65.8	70.2	60.2	61.3	64.2	68.5	58.7	59.9	62.7	66.9	57.3	58.4	61.2	65.3	54.4	55.5	58.1	62.0	50.4	51.4	53.8	57.4
		S/T	0.96	0.92	0.83	0.68	0.99	0.96	0.86	0.70	1.00	0.98	0.89	0.72	1.00	1.00	0.91	0.74	1.00	1.00	0.95	0.77	1.00	1.00	0.96	0.78
		ΔT	24	24	22	19	24	24	23	20	24	24	23	20	23	24	23	20	22	23	23	20	21	21	21	18
		kW	3.87	3.96	4.09	4.22	4.18	4.27	4.41	4.56	4.45	4.55	4.70	4.86	4.69	4.80	4.96	5.13	4.89	5.00	5.17	5.35	5.07	5.18	5.36	5.55
		Amps	13.8	14.2	14.7	15.2	15.0	15.4	15.9	16.6	16.4	16.8	17.4	18.1	17.6	18.0	18.7	19.4	20.6	21.2	21.9	22.8	21.8	22.4	23.2	24.1
		HI PR	241	259	263	269	265	285	289	295	310	333	338	345	353	380	385	393	397	427	433	443	459	493	500	511
		Lo PR	115	119	130	138	118	122	133	142	123	126	138	147	126	130	142	151	128	132	144	154	131	136	148	158
	2000	MBh	59.8	61.0	63.9	68.1	58.4	59.6	62.4	66.5	57.0	58.1	60.9	65.0	55.6	56.7	59.4	63.4	52.9	53.9	56.4	60.2	49.0	49.9	52.3	55.8
		S/T	0.91	0.88	0.80	0.65	0.95	0.91	0.82	0.67	0.97	0.94	0.85	0.69	1.00	0.97	0.87	0.71	1.00	1.00	0.91	0.73	1.00	1.00	0.91	0.74
		ΔT	25	25	23	20	25	25	24	20	25	25	24	20	26	25	24	21	24	25	23	20	23	23	22	19
		kW	3.84	3.93	4.05	4.19	4.15	4.24	4.38	4.52	4.41	4.51	4.66	4.82	4.65	4.75	4.91	5.08	4.85	4.96	5.13	5.31	5.02	5.14	5.31	5.50
		Amps	13.7	14.0	14.5	15.1	14.9	15.2	15.8	16.4	16.2	16.6	17.2	17.9	17.4	17.8	18.5	19.2	20.4	21.0	21.7	22.6	21.6	22.2	23.0	23.9
		HI PR	239	257	260	266	262	282	286	292	307	330	335	342	349	376	381	389	393	423	429	438	454	488	495	506
		Lo PR	114	118	128	137	117	121	132	141	121	125	137	145	125	128	140	149	127	131	143	152	130	134	147	156
	1750	MBh	55.2	56.3	58.9	62.9	53.9	55.0	57.6	61.4	52.6	53.7	56.2	60.0	51.4	52.4	54.8	58.5	48.8	49.7	52.1	55.6	45.2	46.1	48.2	51.5
		S/T	0.88	0.85	0.77	0.62	0.91	0.88	0.79	0.64	0.94	0.90	0.82	0.66	0.97	0.93	0.84	0.68	1.00	0.97	0.87	0.71	1.00	0.98	0.88	0.71
		ΔT	26	25	24	21	26	25	24	21	26	25	24	21	26	26	24	21	26	25	24	21	24	24	22	19
		kW	3.81	3.89	4.02	4.15	4.11	4.20	4.34	4.49	4.38	4.47	4.62	4.78	4.61	4.71	4.87	5.04	4.81	4.92	5.08	5.26	4.98	5.09	5.27	5.45
		Amps	13.5	13.9	14.4	14.9	14.7	15.1	15.6	16.2	16.1	16.5	17.1	17.7	17.2	17.7	18.3	19.0	20.2	20.8	21.5	22.3	21.4	22.0	22.7	23.6
		HI PR	236	254	258	263	259	279	283	289	304	327	331	339	346	372	377	386	389	419	424	434	450	484	490	501
		Lo PR	113	116	127	135	116	120	131	139	120	124	135	144	123	127	139	148	126	130	142	151	129	133	145	155

IDB = Entering Indoor Dry Bulb Temperature

Shaded area reflects AHRI (TVA) conditions

kW = Total system power

High and low pressures are measured at the liquid and suction service valves.

Amps = outdoor unit amps (comp.+fan)

AHRI Ratings

Outdoor Unit	Indoor Units		Cooling Ratings				CFM	AHRI #
	Coils/Air Handlers	Furnaces	Total[1]	Sens.[1]	SEER[2]	EER[3]		
DSXC18 0361A*	AVPTC313714A*		35,000	26,600	18.0	13.0	1,250	4431260
	AVPTC426014A*		35,000	26,600	18.0	13.0	1,225	4431264
	CA*F3743*6D*+EEP+TXV		35,000	26,600	15.0	12.5	1,250	5357210
	CA*F3743*6D*+MBVC1600**-1A*+TXV		35,000	26,600	18.0	13.0	1,225	4415028
	CA*F3743*6D*+MBVC2000**-1A*+TXV		35,000	26,600	18.0	13.0	1,225	4415029
	CA*F3743*6D*+TXV	A*VC80604B*B*	35,000	26,600	17.0	13.0	1,220	5038969
	CA*F3743*6D*+TXV	A*VC80805C*B*	35,000	26,600	17.0	13.0	1,190	5038941
	CA*F3743*6D*+TXV	G*VC91155DXA*	35,000	26,600	18.0	13.0	1,225	4415050
	CA*F3743*6D*+TXV	A*VC950714CXB*	35,000	26,600	17.5	13.0	1,275	5620831
	CA*F3743*6D*+TXV	G*VC951155DXB*	35,000	26,600	18.0	13.0	1,225	5620857
	CA*F3743*6D*+TXV	A*VM960604CXB*	35,000	26,600	17.5	13.0	1,275	5620867
	CA*F3743*6D*+TXV	G*VC950905DXB*	35,000	26,600	18.0	13.25	1,250	5620843
	CA*F3743*6D*+TXV	G*VM961155DXB*	35,000	26,600	18.0	13.0	1,225	5620899
	CA*F3743*6D*+TXV	G*VC80604B*B*	35,000	26,600	17.0	13.0	1,220	5038845
	CA*F3743*6D*+TXV	G*VC80805C*B*	35,000	26,600	17.0	13.0	1,190	5038938
	CA*F3743*6D*+TXV	ADVC80805C*B*	35,000	26,600	17.0	13.0	1,190	5039119
	CA*F3743*6D*+TXV	G*VC950704CXB*	35,000	26,600	17.5	13.0	1,275	5620824
	CA*F3743*6D*+TXV	G*VC950905CXB*	35,000	26,600	18.0	13.25	1,250	5620835
	CA*F3743*6D*+TXV	A*VC950915DXB*	35,000	26,600	18.0	13.25	1,250	5620851
	CA*F3743*6D*+TXV	G*VM960604CXB*	35,000	26,600	17.5	13.0	1,275	5620868
	CA*F3743*6D*+TXV	G*VC950714CXB*	35,000	26,600	17.5	13.0	1,275	5620832
	CA*F3743*6D*+TXV	G*VC950915DXB*	35,000	26,600	18.0	13.25	1,250	5620852
	CA*F3743*6D*+TXV	G*VM960805CXB*	35,000	26,600	18.0	13.25	1,250	5620879
	CA*F3743*6D*+TXV	G*VM960805DXB*	35,000	26,600	18.0	13.25	1,250	5620886
	CA*F3743*6D*+TXV	G*VM961005DXB*	35,000	26,600	18.0	13.0	1,225	5620893
	CA*F4860*6D*+TXV	G*VC950905DXB*	35,000	26,600	17.5	13.0	1,225	5620844
	CA*F4860*6D*+TXV	G*VM960805DXB*	35,000	26,600	17.5	13.0	1,225	5620887
	CA*F4860*6D*+TXV	G*VM960805CXB*	35,000	26,600	17.5	13.0	1,225	5620880
	CA*F4860*6D*+TXV	G*VC950905CXB*	35,000	26,600	17.5	13.0	1,225	5620836
	CA*F4860*6D*+TXV	A*VC950915DXB*	35,000	26,600	17.5	13.0	1,225	5620853
	CA*F4860*6D*+TXV	G*VC950915DXB*	35,000	26,600	17.5	13.0	1,225	5620854
	CA*F4961*6D*+EEP+TXV		36,000	27,400	15.0	12.5	1,250	5357211
	CA*F4961*6D*+MBVC1600**-1A*+TXV		36,000	27,400	17.5	13.0	1,200	4431665
	CA*F4961*6D*+MBVC2000**-1A*+TXV		36,000	27,400	19.0	13.5	1,250	4431666
	CA*F4961*6D*+TXV	ADVC80805C*B*	36,000	27,400	18.0	13.7	1,190	5038968
	CA*F4961*6D*+TXV	A*VC80604B*B*	36,000	27,400	17.5	13.2	1,220	5038818
	CA*F4961*6D*+TXV	A*VC80805C*B*	36,000	27,400	18.0	13.7	1,190	5038942
	CA*F4961*6D*+TXV	A*VC950714CXB*	35,000	26,600	17.5	13.3	1,225	5620833
	CA*F4961*6D*+TXV	A*VC950915DXB*	35,000	26,600	18.0	13.5	1,225	5620855
	CA*F4961*6D*+TXV	G*VM960805CXB*	35,000	26,600	18.0	13.25	1,225	5620881
	CA*F4961*6D*+TXV	G*VM960603BXB*	35,000	26,600	17.0	13.0	1,200	5620863
	CA*F4961*6D*+TXV	G*VM960805DXB*	35,000	26,600	18.0	13.5	1,225	5620888
	CA*F4961*6D*+TXV	G*VC951155DXB*	36,000	27,400	18.3	13.25	1,225	5620858
	CA*F4961*6D*+TXV	G*VM960604CXB*	35,000	26,600	17.5	13.3	1,225	5620870
	CA*F4961*6D*+TXV	G*VC80805C*B*	36,000	27,400	18.0	13.7	1,190	5038816
	CA*F4961*6D*+TXV	G*VC80604B*B*	36,000	27,400	17.5	13.2	1,220	5039228
	CA*F4961*6D*+TXV	G*VC950704CXB*	35,000	26,600	17.5	13.3	1,225	5620825

See Notes on Page 19.

AHRI Ratings (cont.)

Outdoor Unit	Indoor Units		Cooling Ratings				CFM	AHRI #
	Coils/Air Handlers	Furnaces	Total[1]	Sens.[1]	SEER[2]	EER[3]		
DSXC18 0361A* (cont.)	CA*F4961*6D*+TXV	G*VC950905CXB*	35,000	26,600	18.0	13.25	1,225	5620837
	CA*F4961*6D*+TXV	G*VC950915DXB*	35,000	26,600	18.0	13.5	1,225	5620856
	CA*F4961*6D*+TXV	A*VM960604CXB*	35,000	26,600	17.5	13.3	1,225	5620869
	CA*F4961*6D*+TXV	G*VC950453BXB*	35,000	26,600	17.0	13.0	1,200	5620819
	CA*F4961*6D*+TXV	G*VC950714CXB*	35,000	26,600	17.5	13.3	1,225	5620834
	CA*F4961*6D*+TXV	G*VC950905DXB*	35,000	26,600	18.0	13.5	1,225	5620845
	CA*F4961*6D*+TXV	G*VM961005DXB*	36,000	27,400	18.3	13.25	1,225	5620894
	CA*F4961*6D*+TXV	G*VM961155DXB*	36,000	27,400	18.3	13.25	1,225	5620900
	CHPF3642C6C*+MBVC1600**-1A*+TXV		35,000	26,600	18.0	13.0	1,250	3654252
	CHPF3642C6C*+TXV	G*VM960604CXB*	35,000	26,600	17.5	13.0	1,275	5620872
	CHPF3642C6C*+TXV	G*VC950704CXB*	35,000	26,600	17.5	13.0	1,275	5620826
	CHPF3642C6C*+TXV	A*VM960604CXB*	35,000	26,600	17.5	13.0	1,275	5620871
	CHPF3642D6C*+MBVC2000**-1A*+TXV		35,000	26,600	18.0	13.0	1,250	3654256
	CHPF3642D6C*+TXV	G*VC951155DXB*	35,000	26,600	18.0	13.0	1,225	5620859
	CHPF3642D6C*+TXV	G*VM961005DXB*	35,000	26,600	18.0	13.0	1,225	5620895
	CHPF3642D6C*+TXV	G*VM961155DXB*	35,000	26,600	18.0	13.0	1,225	5620901
	CHPF3642D6C*+TXV	G*VC950905CXB*	35,000	26,600	18.0	13.25	1,250	5620838
	CHPF3642D6C*+TXV	G*VC950905DXB*	35,000	26,600	18.0	13.25	1,250	5620846
	CHPF3642D6C*+TXV	G*VM960805DXB*	35,000	26,600	18.0	13.25	1,250	5620889
	CHPF3642D6C*+TXV	G*VM960805CXB*	35,000	26,600	18.0	13.25	1,250	5620882
	CHPF3743C6B*+MBVC1600**-1A*+TXV		35,000	26,600	18.0	13.0	1,250	3654262
	CHPF3743C6B*+TXV	G*VC80805C*B*	35,000	26,600	17.0	13.0	1,190	5039016
	CHPF3743C6B*+TXV	G*VC80604B*B*	35,000	26,600	17.0	13.0	1,220	5039229
	CHPF3743C6B*+TXV	G*VC950905CXB*	35,000	26,600	18.0	13.25	1,250	5620839
	CHPF3743C6B*+TXV	G*VM960603BXB*	34,600	26,200	17.0	13.0	1,200	5620864
	CHPF3743C6B*+TXV	A*VM960604CXB*	35,000	26,600	17.5	13.0	1,275	5620873
	CHPF3743C6B*+TXV	G*VM960805CXB*	35,000	26,600	18.0	13.25	1,250	5620883
	CHPF3743C6B*+TXV	G*VC950704CXB*	35,000	26,600	17.5	13.0	1,275	5620827
	CHPF3743C6B*+TXV	G*VM961155DXB*	35,000	26,600	18.0	13.0	1,225	5620902
	CHPF3743C6B*+TXV	A*VC80805C*B*	35,000	26,600	17.0	13.0	1,190	5038819
	CHPF3743C6B*+TXV	A*VC80604B*B*	35,000	26,600	17.0	13.0	1,220	5039122
	CHPF3743C6B*+TXV	G*VC950453BXB*	34,600	26,200	17.0	13.0	1,200	5620820
	CHPF3743C6B*+TXV	G*VM960604CXB*	35,000	26,600	17.5	13.0	1,275	5620874
	CHPF3743C6B*+TXV	G*VM960805DXB*	35,000	26,600	18.0	13.25	1,250	5620890
	CHPF3743C6B*+TXV	G*VM961005DXB*	35,000	26,600	18.0	13.0	1,225	5620896
	CHPF3743D6B*+MBVC2000**-1A*+TXV		35,000	26,600	18.0	13.0	1,250	3654277
	CHPF3743D6B*+TXV	A*VC80805C*B*	35,000	26,600	17.0	13.0	1,190	5039108
	CHPF3743D6B*+TXV	G*VC950453BXB*	34,600	26,200	17.0	13.0	1,200	5620821
	CHPF3743D6B*+TXV	G*VM960604CXB*	34,600	26,200	17.0	13.0	1,225	5620876
	CHPF3743D6B*+TXV	G*VM960805DXB*	35,000	26,600	18.0	13.25	1,250	5620891
	CHPF3743D6B*+TXV	G*VC950905CXB*	35,000	26,600	18.0	13.25	1,250	5620840
	CHPF3743D6B*+TXV	G*VM960603BXB*	34,600	26,200	17.0	13.0	1,200	5620865
	CHPF3743D6B*+TXV	G*VM961005DXB*	35,000	26,600	18.0	13.0	1,225	5620897
	CHPF3743D6B*+TXV	G*VC80805C*B*	35,000	26,600	17.0	13.0	1,190	5038940
	CHPF3743D6B*+TXV	G*VC80604B*B*	35,000	26,600	17.0	13.0	1,220	5038939
	CHPF3743D6B*+TXV	A*VC80604B*B*	35,000	26,600	17.0	13.0	1,220	5038943
	CHPF3743D6B*+TXV	G*VC950704CXB*	34,600	26,200	17.0	13.0	1,225	5620828

See Notes on Page 19.

AHRI Ratings (cont.)

Outdoor Unit	Indoor Units		Cooling Ratings				CFM	AHRI #
	Coils/Air Handlers	Furnaces	Total[1]	Sens.[1]	SEER[2]	EER[3]		
DSXC18 0361A* (cont.)	CHPF3743D6B*+TXV	G*VM961155DXB*	35,000	26,600	18.0	13.0	1,225	5620903
	CHPF3743D6B*+TXV	G*VC950905DXB*	35,000	26,600	18.0	13.25	1,250	5620847
	CHPF3743D6B*+TXV	A*VM960604CXB*	34,600	26,200	17.0	13.0	1,225	5620875
	CHPF3743D6B*+TXV	G*VM960805CXB*	35,000	26,600	18.0	13.25	1,250	5620884
	CHPF3743D6B*+TXV	G*VC951155DXB*	35,000	26,600	18.0	13.0	1,225	5620860
	CHPF4860D6D*+EEP+TXV		36,000	27,400	15.0	12.5	1,250	5357212
	CHPF4860D6D*+MBVC2000**-1A*+TXV		35,000	26,600	18.3	13.0	1,250	3654297
	CHPF4860D6D*+TXV	A*VC80604B*B*	36,000	27,400	17.5	13.2	1,220	5039017
	CHPF4860D6D*+TXV	G*VC951155DXB*	35,000	26,600	18.3	13.25	1,225	5620861
	CHPF4860D6D*+TXV	A*VM960604CXB*	35,000	26,600	17.5	13.3	1,225	5620877
	CHPF4860D6D*+TXV	G*VM960805DXB*	36,000	27,400	18.0	13.25	1,250	5620892
	CHPF4860D6D*+TXV	G*VC950704CXB*	35,000	26,600	17.5	13.3	1,225	5620829
	CHPF4860D6D*+TXV	G*VC950905CXB*	36,000	27,400	18.0	13.25	1,250	5620841
	CHPF4860D6D*+TXV	G*VM960604CXB*	35,000	26,600	17.5	13.3	1,225	5620878
	CHPF4860D6D*+TXV	G*VM961005DXB*	35,000	26,600	18.3	13.25	1,225	5620898
	CHPF4860D6D*+TXV	G*VC80604B*B*	36,000	27,400	17.5	13.2	1,220	5038846
	CHPF4860D6D*+TXV	A*VC80805C*B*	36,000	27,400	18.0	13.7	1,190	5038970
	CHPF4860D6D*+TXV	G*VM960603BXB*	34,600	26,200	17.0	13.0	1,200	5620866
	CHPF4860D6D*+TXV	G*VC950453BXB*	34,600	26,200	17.0	13.0	1,200	5620822
	CHPF4860D6D*+TXV	G*VC950905DXB*	36,000	27,400	18.0	13.25	1,250	5620848
	CHPF4860D6D*+TXV	G*VM961155DXB*	35,000	26,600	18.3	13.25	1,225	5620904
	CHPF4860D6D*+TXV	G*VC80805C*B*	36,000	27,400	18.0	13.7	1,190	5039107
	CHPF4860D6D*+TXV	G*VM960805CXB*	36,000	27,400	18.0	13.25	1,250	5620885
	CSCF3642N6D*+TXV	G*VC950905DXB*	34,600	26,200	17.5	13.0	1,150	5620850
	CSCF3642N6D*+TXV	G*VC950704CXB*	34,600	26,200	17.0	13.0	1,225	5620830
	CSCF3642N6D*+TXV	G*VC950905CXB*	34,600	26,200	17.5	13.0	1,150	5620842
	CSCF3642N6D*+TXV	G*VC950453BXB*	34,600	26,200	17.0	13.0	1,200	5620823
	CSCF3642N6D*+TXV	G*VC951155DXB*	34,600	26,200	17.5	13.0	1,225	5620862
	CSCF4860N6D*+EEP+TXV		36,000	27,400	15.0	12.5	1,250	5357213
DSXC18 0481A*	AVPTC426014A*		47,000	35,800	17.5	13.0	1,700	4431280
	CA*F4961*6D*+EEP+TXV		48,000	36,400	15.5	12.5	1,500	5357214
	CA*F4961*6D*+MBVC1600**-1A*+TXV		46,000	35,000	17.0	13.0	1,725	4431667
	CA*F4961*6D*+MBVC2000**-1A*+TXV		47,500	36,200	18.0	13.25	1,750	4431668
	CA*F4961*6D*+TXV	G*VC91155DXA*	46,500	35,400	16.5	13.0	1,650	4431743
	CA*F4961*6D*+TXV	A*VC80805C*B*	48,000	36,400	17.0	12.8	1,590	5038944
	CA*F4961*6D*+TXV	G*VM960604CXB*	46,000	35,000	17.0	13.0	1,725	5620915
	CA*F4961*6D*+TXV	G*VM961155DXB*	47,000	35,800	18.0	13.0	1,750	5620923
	CA*F4961*6D*+TXV	G*VC950714CXB*	46,000	35,000	17.0	13.0	1,725	5620906
	CA*F4961*6D*+TXV	A*VC950915DXB*	47,000	35,800	17.5	13.0	1,750	5620910
	CA*F4961*6D*+TXV	ADVC80805C*B*	48,000	36,400	17.0	12.8	1,580	5039231
	CA*F4961*6D*+TXV	A*VC950714CXB*	46,000	35,000	17.0	13.0	1,725	5620905
	CA*F4961*6D*+TXV	G*VC950905DXB*	47,000	35,800	17.5	13.0	1,750	5620908
	CA*F4961*6D*+TXV	G*VC950915DXB*	47,000	35,800	17.5	13.0	1,750	5620911
	CA*F4961*6D*+TXV	G*VM961005DXB*	47,000	35,800	18.0	13.0	1,750	5620921
	CA*F4961*6D*+TXV	G*VM960805DXB*	47,000	35,800	17.5	13.0	1,750	5620919
	CA*F4961*6D*+TXV	G*VC80805C*B*	48,000	36,400	17.0	12.8	1,590	5039230
	CA*F4961*6D*+TXV	G*VC951155DXB*	47,000	35,800	18.0	13.0	1,750	5620912

See Notes on Page 19.

AHRI Ratings (cont.)

Outdoor Unit	Indoor Units		Cooling Ratings				CFM	AHRI #
	Coils/Air Handlers	Furnaces	Total[1]	Sens.[1]	SEER[2]	EER[3]		
DSXC18 0481A* (cont.)	CA*F4961*6D*+TXV	A*VM960604CXB*	46,000	35,000	17.0	13.0	1,725	5620914
	CHPF4860D6D*+EEP+TXV		48,000	36,400	15.5	12.5	1,500	5357215
	CHPF4860D6D*+MBVC1600**-1A*+TXV		46,000	35,000	17.0	13.0	1,725	3654393
	CHPF4860D6D*+MBVC2000**-1A*+TXV		47,500	36,200	18.0	13.25	1,750	3654394
	CHPF4860D6D*+TXV	G*VC80805C*B*	48,000	36,400	17.0	12.8	1,590	5039018
	CHPF4860D6D*+TXV	G*VM960805DXB*	47,000	35,800	17.5	13.0	1,750	5620920
	CHPF4860D6D*+TXV	G*VC950905CXB*	47,000	35,800	16.5	13.0	1,750	5620907
	CHPF4860D6D*+TXV	G*VM960805CXB*	47,000	35,800	16.5	13.0	1,750	5620918
	CHPF4860D6D*+TXV	A*VC80805C*B*	48,000	36,400	17.0	12.8	1,590	5038820
	CHPF4860D6D*+TXV	G*VC951155DXB*	47,500	36,200	18.0	13.0	1,600	5620913
	CHPF4860D6D*+TXV	G*VC950905DXB*	47,000	35,800	17.5	13.0	1,750	5620909
	CHPF4860D6D*+TXV	G*VM960604CXB*	46,000	35,000	17.0	13.0	1,725	5620917
	CHPF4860D6D*+TXV	G*VM961155DXB*	47,500	36,200	18.0	13.0	1,600	5620924
	CHPF4860D6D*+TXV	A*VM960604CXB*	46,000	35,000	17.0	13.0	1,725	5620916
	CHPF4860D6D*+TXV	G*VM961005DXB*	47,500	36,200	18.0	13.0	1,600	5620922
	CSCF4860N6D*+EEP+TXV		48,000	36,400	15.5	12.5	1,500	5357216
DSXC18 0601A*	AVPTC426014A*		58,000	42,000	16.0	11.75	1,780	4431289
	CA*F4961*6D*+EEP+TXV		57,000	41,000	15.0	12.0	1,500	5357217
	CA*F4961*6D*+MBVC2000**-1A*+TXV		58,000	42,000	17.0	12.0	2,000	4431669
	CA*F4961*6D*+TXV	G*VM960805CXB*	58,000	42,000	16.0	11.5	1,750	5620933
	CA*F4961*6D*+TXV	G*VM960805DXB*	58,000	42,000	16.0	11.5	1,750	5620935
	CA*F4961*6D*+TXV	G*VM961005DXB*	58,000	42,000	16.0	11.5	1,900	5620937
	CA*F4961*6D*+TXV	G*VM961155DXB*	58,000	42,000	16.0	11.5	1,900	5620939
	CA*F4961*6D*+TXV	G*VC950905CXB*	58,000	42,000	16.0	11.5	1,750	5620925
	CA*F4961*6D*+TXV	A*VC950915DXB*	58,000	42,000	16.0	11.5	1,750	5620929
	CA*F4961*6D*+TXV	G*VC950915DXB*	58,000	42,000	16.0	11.5	1,750	5620930
	CA*F4961*6D*+TXV	G*VC950905DXB*	58,000	42,000	16.0	11.5	1,750	5620927
	CA*F4961*6D*+TXV	G*VC951155DXB*	58,000	42,000	16.0	11.5	1,900	5620931
	CHPF4860D6D*+EEP+TXV		57,000	41,000	15.0	12.0	1,500	5357218
	CHPF4860D6D*+MBVC2000**-1A*+TXV		58,000	42,000	17.0	12.0	2,000	3654439
	CHPF4860D6D*+TXV	G*VC951155DXB*	58,000	42,000	16.0	11.75	1,750	5620932
	CHPF4860D6D*+TXV	G*VM960805CXB*	58,000	42,000	16.0	11.5	1,900	5620934
	CHPF4860D6D*+TXV	G*VM960805DXB*	58,000	42,000	16.0	11.5	1,900	5620936
	CHPF4860D6D*+TXV	G*VM961155DXB*	58,000	42,000	16.0	11.75	1,750	5620940
	CHPF4860D6D*+TXV	G*VC950905DXB*	58,000	42,000	16.0	11.5	1,900	5620928
	CHPF4860D6D*+TXV	G*VC950905CXB*	58,000	42,000	16.0	11.5	1,900	5620926
	CHPF4860D6D*+TXV	G*VM961005DXB*	58,000	42,000	16.0	11.75	1,750	5620938
	CSCF4860N6D*+EEP+TXV		57,000	41,000	15.0	12.0	1,500	5357219

[1] BTU/h

[2] Seasonal Energy Efficiency Ratio; Certified per AHRI 210/240 @ 80°F/ 67°F/ 95°F

[3] Energy Efficiency Ratio @ 80°F/ 67°F/ 95°F

Notes

- Always check the S&R plate for electrical data on the unit being installed.
- When matching the outdoor unit to the indoor unit, use the piston supplied with the outdoor unit or that specified on the piston kit chart supplied with the indoor unit.
- EEP - Order from Service Dept. Part No. B13707-38 or new Solid State Board B13707-35S. Part No. B13707-38 is not interchangeable with B13707-35S. The Goodman Gas Furnace contains the EEP cooling time delay

Dimensions

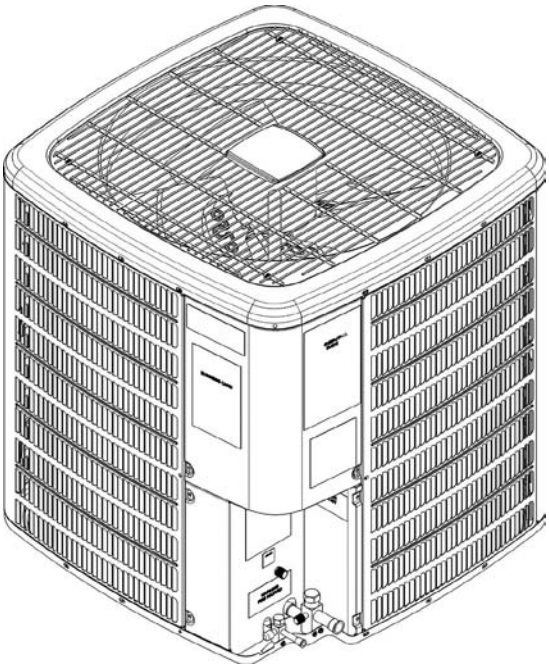

Model	W	D	H
DSXC180361A*	35½	35½	38¼
DSXC180481A*	35½	35½	38¼
DSXC180601A*	35½	35½	38¼

WIRING DIAGRAM

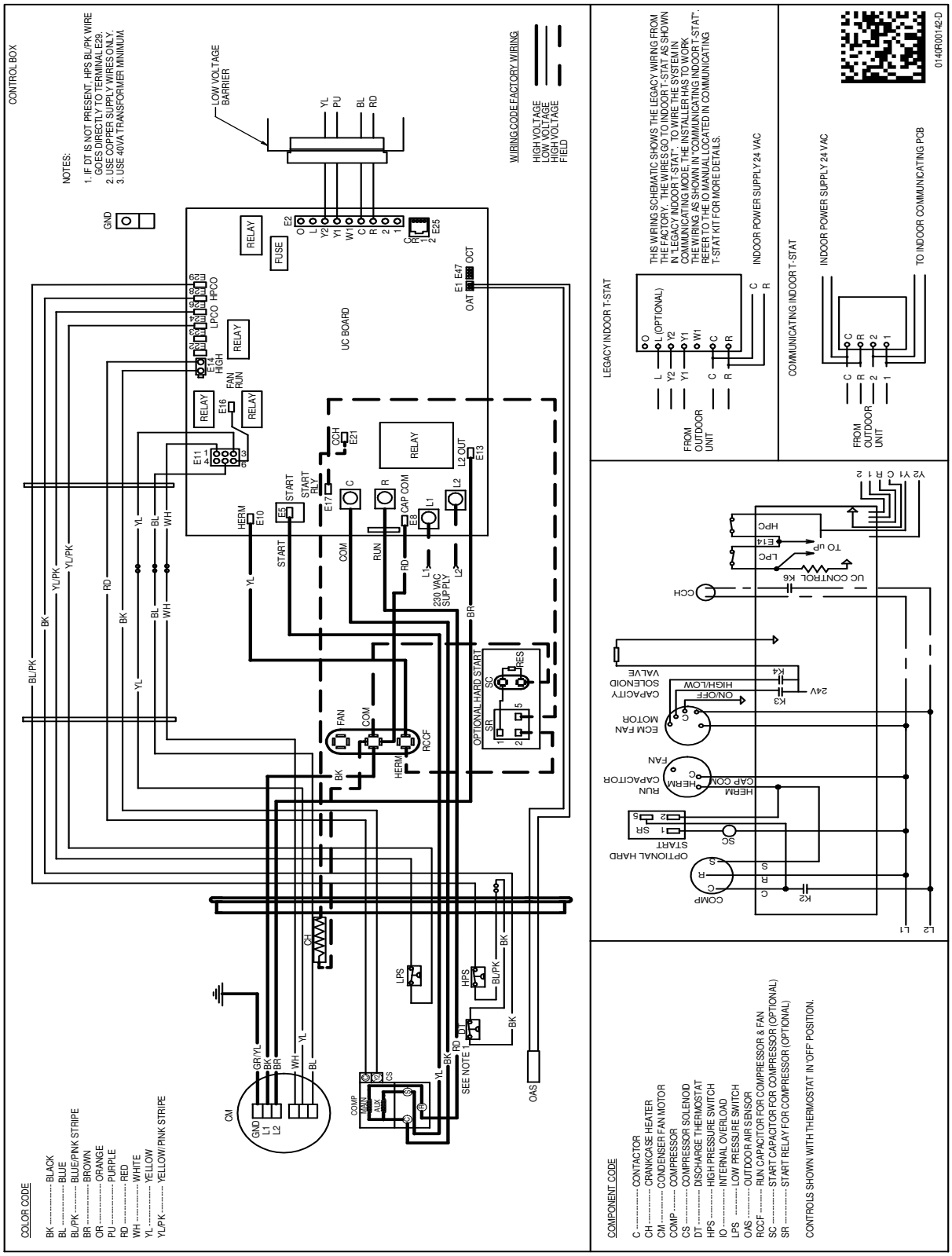

WARNING

High Voltage: Disconnect all power before servicing or installing this unit. Multiple power sources may be present. Failure to do so may cause property damage, personal injury, or death.

Wiring is subject to change. Always refer to the wiring diagram or the unit for the most up-to-date wiring.

Accessories

Model	Description	DSXC18 036	DSXC18 048	DSXC18 060
ABK-20	Anchor Bracket Kit◊	X	X	X
ASC-01	Anti-Short Cycle Kit	X	X	X
B1141643[1]	24V Transformer	X	X	X
CSR-U-1	Hard-start Kit	X		
CSR-U-2	Hard-start Kit	X	X	X
CSR-U-3	Hard-start Kit		X	X
FSK01A [2]	Freeze Protection Kit	X	X	X
LSK02A	Liquid Line Solenoid Valve	X	X	X
OT18-60A [3]	Outdoor Thermostat/Lockout Thermostat	X	X	X
TX3N4[4]	TXV Kit	X		
TX5N4	TXV Kit		X	X

◊ Contains 20 brackets; four brackets needed to anchor unit to pad

1 This component is included in the CTK01AA communicating thermostat kit.

2 Installed on indoor coil

3 Available in 24V legacy mode only. This feature is integrated in the communicating mode.

4 Condensing units and heat pumps with reciprocating compressors require the use of start-assist components when used in conjunction with an indoor coil using a non-bleed thermal expansion valve refrigerant metering device or liquid line solenoid kit. The TXV should always be sized based on the tonnage of the outdoor unit.

Notes

Notes

Goodman Manufacturing Company, L.P., reserves the right to discontinue, or change at any time, specifications or designs without notice or without incurring obligations. © 2013 • Goodman Manufacturing Company, L.P. • Houston, Texas • Printed in the USA.